TEC-30006-000
SHT 1.1

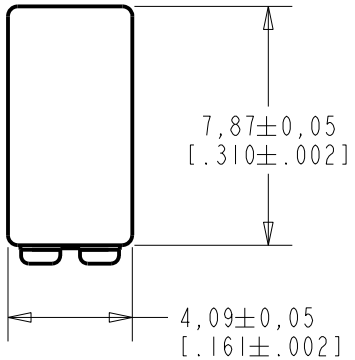

NOTES:

1. A POSITIVE GOING VOLTAGE AT TERMINAL 2, RELATIVE TO TERMINAL 1, CAUSES A DECREASE IN PRESSURE AT THE SOUND OUTLET.
2. LOCATED FROM TWO SURFACES FOR CUSTOMER CONVENIENCE. ONLY APPLICABLE FROM ONE SURFACE, NOT TO BE USED TOGETHER. HORIZONTAL LOCATION FOR TERMINAL CENTERED TO ±0,17 [.007].

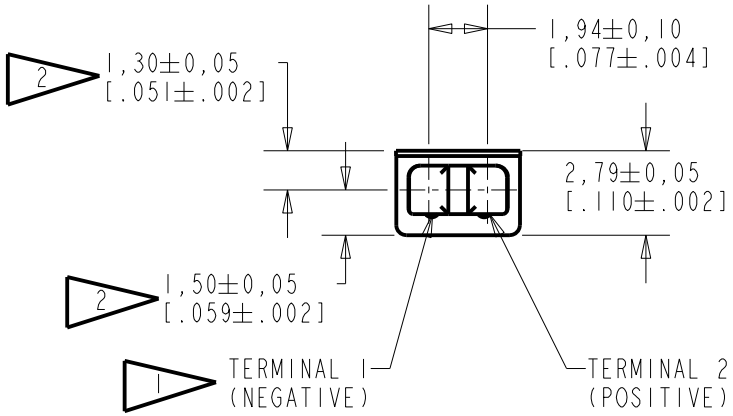

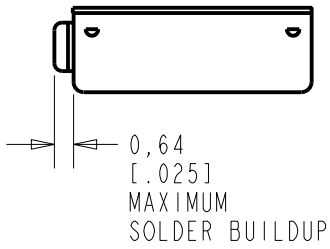

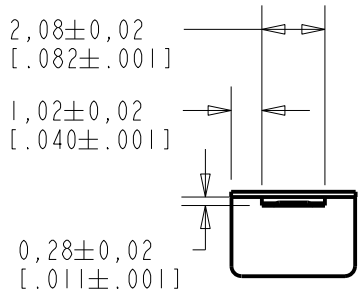

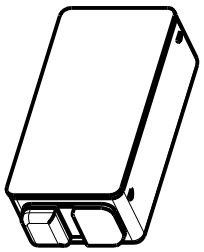

NOMINAL WEIGHT
.35 GRAM

DIMENSIONS IN MILLIMETERS [INCHES]

Revision	C.O. #	Implementation Date	RELEASE LEVEL	REVISION
			Active	E
E	C10116424	11-28-14		
D	C10107030	1-30-08		

KNOWLES ELECTRONICS
ITASCA, ILLINOIS U.S.A.

SCALE: 4:1

DO NOT SCALE DRAWING

TITLE: RECEIVER
OUTLINE DRAWING

TEC-30006-000
SHT 1.1

DR. BY	DATE
SDZ	7-05-06
CK. BY	DATE
GJP	7-20-06
APP. BY	DATE
GJP	7-20-06

THIS UNIT IS A BALANCED ARMATURE RECEIVER INTENDED FOR USE IN BTE HEARING AIDS, AND IS 1/2 THE SIZE OF AN EF RECEIVER.

NO DAMPING

TEC-30006-000
SHEET 2.1

CONSTANT VOLTAGE DRIVE CONDITIONS

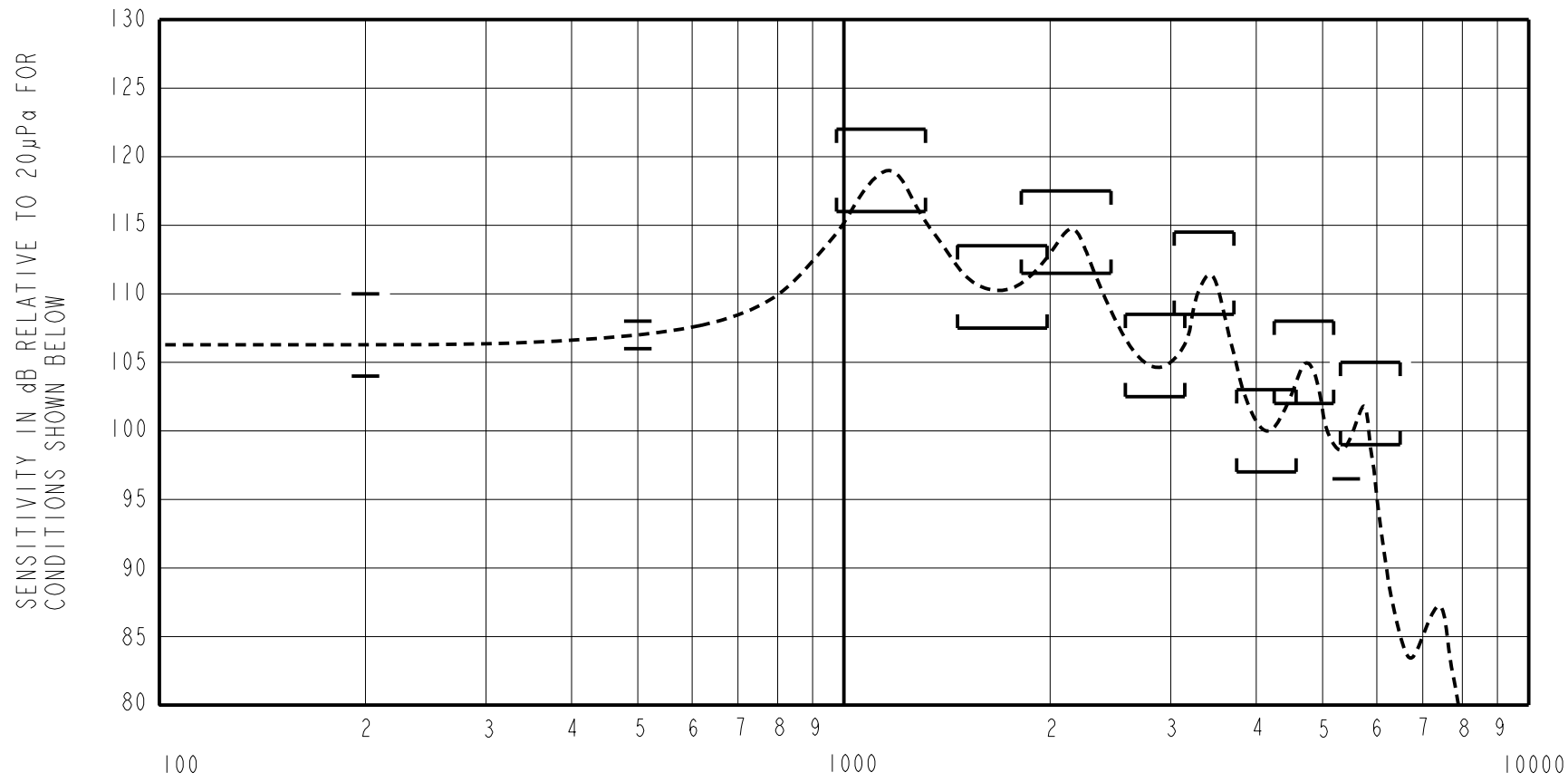

ACOUSTICAL

SENSITIVITY
DEVICE WILL PRODUCE THE SPL LISTED BELOW UNDER TEST CONDITIONS DESCRIBED IN TABLE 3. NOMINAL SENSITIVITY AT 1000 Hz IS dB RELATIVE TO 20µPa. ALL OTHER VALUES IN dB RELATIVE TO THE SENSITIVITY AT 500 Hz.

FREQUENCY (Hz)	*MINIMUM*	*NOMINAL*	*MAXIMUM*
200	-3.0	0.0	+3.0
500	-1.0	107.0	+1.0
975-1315	+9.0	+12.0	+15.0
1465-1980	+0.5	+3.5	+6.5
1815-2455	+4.5	+7.5	+10.5
2575-3145	-4.5	-1.5	+1.5
3035-3710	+1.5	+4.5	+7.5
3745-4575	-10.0	-7.0	-4.0
4250-5190	-5.0	-2.0	+1.0
5412	-10.5	---	---
5310-6490	-8.0	-5.0	-2.0

TABLE 1

TOTAL HARMONIC DISTORTION
DEVICE WILL NOT EXCEED TOTAL HARMONIC DISTORTION LEVELS LISTED BELOW.

FREQUENCY (Hz)	*AC DRIVE (V rms)*	*DC BIAS (mA)*	*LIMIT (%)*
382	0.154	0	5
573	0.154	0	5
573	0.308	0	10

TABLE 2

TEST CONDITIONS

NOMINAL SOURCE VOLTAGE	0.154 V rms, TO DELIVER 0.35 mVA AT 500 Hz
SOURCE IMPEDANCE	<1 Ohm
TUBING	8mm X 1mm ID + 28mm X 1.5mm ID EAR HOOK SIMULATOR + 25mm X 2mm ID TUBE + 18mm X 3mm ID TUBE
COUPLER CAVITY	2 cm^3, SIMULATED ANSI S3.7 TYPE HA-3 (IEC 60318-5)

TABLE 3

ELECTRICAL

DC RESISTANCE	46 OHMS ± 10%
IMPEDANCE @ 500 Hz	62 OHMS ± 15%
INDUCTANCE @ 500 Hz	10.2 mH ± 15%
CAPACITANCE @ 10 MHz	9.0 pF ± 20%

TABLE 4

ISOLATION: CASE WILL BE ELECTRICALLY ISOLATED FROM THE COIL CIRCUIT.

MECHANICAL

PORT LOCATION: 12N

SOLDER TYPE: SAC305

TEMPERATURE
OPERATING: SENSITIVITY WILL NOT VARY MORE THAN +1/-3 dB FROM -17°C TO 63°C
STORAGE: -40°C TO 63°C

Revision	C.O. #	Implementation Date	RELEASE LEVEL	REVISION
			Active	E
E	C10116424	11-28-14		
D	C10107030	1-30-08		

KNOWLES ELECTRONICS
ITASCA, ILLINOIS U.S.A.

WHEN TEST LIMITS ARE USED TO ESTABLISH INCOMING INSPECTION ACCEPTANCE/REJECTION CRITERIA, CORRELATION OF TEST EQUIPMENT WITH KNOWLES IS ALSO REQUIRED FOR ELIMINATION OF EQUIPMENT AND TEST METHOD VARIATION

TITLE: RECEIVER
PERFORMANCE SPECIFICATION

TEC-30006-000
SHT 2.1

DR. BY	DATE
SDZ	7-05-06
CK. BY	DATE
GJP	7-20-06
APP. BY	DATE
GJP	7-20-06