SPH0641LM4H-1

Digital Zero-Height SiSonic™ Microphone With Multiple Performance Modes

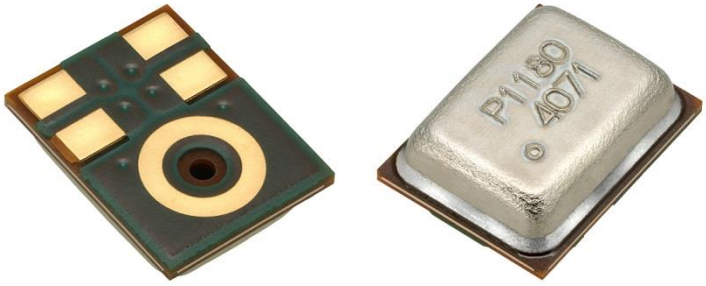

The SPH0641LM4H-1 is a miniature, high-performance, low power, bottom port silicon digital microphone with a single bit PDM output. Using Knowles' proven high performance SiSonic™ MEMS technology, the SPH0641LM4H-1 consists of an acoustic sensor, a low noise input buffer, and a sigma-delta modulator. These devices are suitable for applications such as cellphones, smart phones, laptop computers, sensors, digital still cameras, portable music recorders, and other portable electronic devices where excellent wideband audio performance and RF immunity are required. In addition, the SPH0641LM4H-1 offers multiple performance modes

Features:

- High SNR of 64dB
- Low Current Consumption of 230uA in Low-Power Mode
- Flat Frequency Response
- RF Shielded
- Zero-Height Mic™
- Supports Dual Multiplexed Channels
- Standard SMD Reflow
- Omnidirectional
- Multiple performance modes (Sleep, Low-Power, Standard Performance)
- Sensitivity Matching
- Small Size

©2014 Knowles Electronics

1. ABSOLUTE MAXIMUM RATINGS

Parameter	Absolute Maximum Rating	Units
V_{DD}, DATA to Ground	-0.3, +5.0	V
CLOCK to Ground	-0.3, +5.0	V
SELECT to Ground	-0.3, +5.0	V
Input Current	±5	mA
Short Circuit Current to/from DATA	Indefinite to Ground or V_{DD}	sec
Temperature Range	-40 to +100	°C

Stresses exceeding these "Absolute Maximum Ratings" may cause permanent damage to the device. These are stress ratings only. Functional operation at these or any other conditions beyond those indicated under "Acoustic & Electrical Specifications" is not implied. Exposure beyond those indicated under "Acoustic & Electrical Specifications" for extended periods may affect device reliability.

2. ACOUSTIC & ELECTRICAL SPECIFICATIONS

TEST CONDITIONS: 23 ±2°C, 55±20% R.H., V_{DD}=1.8 V, f_{CLOCK}=2.4 MHz, SELECT pin grounded, no load, unless otherwise indicated

General Microphone Specifications

Parameter		Symbol	Conditions	Min	Typ	Max	Units
Supply Voltage		V_{DD}		1.62	-	3.6	V
Clock Frequency Range	Sleep Mode			0		250	KHz
	Low-Power Mode			351		800	KHz
	Standard Performance Mode			1.024 3.072		2.475 4.8	MHz
Sleep Current[1,3]		I_{SLEEP}	f_{CLOCK} ≤ 250 kHz	-	80		µA
DC Output			Fullscale = ±100	-	0	-	% FS
Directivity				Omnidirectional			
Polarity			Increasing sound	Increasing density of 1's			
Data Format				½ Cycle PDM			
Short Circuit Current		I_{SC}	Grounded DATA pin	1	-	20	mA
Output Load		C_{LOAD}		-	-	140	pF
Fall-asleep Time[4,5]			f_{CLOCK} ≤ 250 kHz	-	-	10	ms
Wake-up Time[4,6]			f_{CLOCK} ≥ 351 kHz	-	-	15	ms
Power-up Time[4]			V_{DD} ≥ V(min)	-	-	50	ms
Mode-Change Time[4]				-	-	10	ms

©2014 Knowles Electronics

Standard Performance Mode

TEST CONDITIONS: f_{CLOCK} = 2.4 MHz, V_{DD}=1.8 V, unless otherwise indicated

Parameter	Symbol	Conditions	Min	Typ	Max	Units
Supply Current[1,2,3]	I_{DD}	f_{CLOCK}=2.4 MHz	-	620	700	µA
Sensitivity[1]	S	94 dB SPL @ 1 kHz	-27	-26	-25	dBFS
Signal to Noise Ratio	SNR	94 dB SPL @ 1 kHz, A-weighted, f_{CLOCK}=2.4 MHz	-	64.3	-	dB(A)
Total Harmonic Distortion	THD	94 dB SPL @ 1 kHz, S = Typ	-	0.2	-	%
Acoustic Overload Point	AOP	10% THD @ 1 kHz, S = Typ	-	120	-	dB SPL
Power Supply Rejection Ratio	PSRR	200 mVpp sinewave @ 1 kHz	-	55	-	dBV/FS
Power Supply Rejection	PSR+N	100 mVpp square wave @ 217 Hz, A-weighted	-	-84	-	dBFS (A)

Low-Power Mode

TEST CONDITIONS: f_{CLOCK} = 768 kHz, V_{DD}=1.8 V, unless otherwise indicated

Parameter	Symbol	Conditions	Min	Typ	Max	Units
Supply Current[2,3]	I_{DD}	f_{CLOCK}=768 kHz	-	235	270	µA
Sensitivity	S	94 dB SPL @ 1 kHz	-27	-26	-25	dBFS
Signal to Noise Ratio	SNR	94 dB SPL @ 1 kHz, A-weighted (20 Hz - 8 kHz)	-	64	-	dB(A)
Total Harmonic Distortion	THD	94 dB SPL @ 1 kHz, S = Typ	-	0.2	-	%
Acoustic Overload Point	AOP	10% THD @ 1 kHz, S = Typ	-	120	-	dB SPL
Power Supply Rejection Ratio	PSRR	200 mVpp sinewave @ 1 kHz	-	59	-	dBV/FS
Power Supply Rejection	PSR+N	100 mVpp square wave@217Hz, A-weighted (20Hz - 8kHz)	-	-86	-	dBFS (A)

©2014 Knowles Electronics

Microphone Interface Specifications

Parameter	Symbol	Conditions	Min	Typ	Max	Units
Logic Input High	V_{IH}		0.7xV_{DD}	-	3.6	V
Logic Input Low	V_{IL}		-0.3	-	0.3xV_{DD}	V
Logic Output High	V_{OH}	I_{OUT} = 2 mA	V_{DD} -0.45	-	-	V
Logic Output Low	V_{OL}	I_{OUT} = 2 mA	-	-	0.45	V
Clock Duty Cycle		$f_{CLOCK} \leq$ 2.4 MHz	40	-	60	%
		2.4MHz $\leq f_{CLOCK} \leq$ 4.8 MHz	48	50	52	%
Clock Rise/Fall Time	t_{EDGE}		-	-	3	ns
Delay Time for Data Assertion	t_{DD}		18	28	40	ns
Delay Time for High Z[7]	t_{DZ}		3	-	16	ns

[1] 100% tested.

[2] I_{DD} varies with C_{LOAD} according to: $\Delta I_{DD} = 0.5*V_{DD}*\Delta C_{LOAD}*f_{CLOCK}$.

[3] Typical and Maximum specifications are measured at standard test conditions.

[4] Valid microphones states are: Powered Down Mode (mic off), Sleep Mode (low current, DATA = high-Z, fast startup), Low-Power Mode (low clock speed) and Standard Performance Mode (normal operation).

[5] Time from f_{CLOCK} < 250 kHz to I_{SLEEP} specification is met when transitioning from Active Mode to Sleep Mode.

[6] Time from $f_{CLOCK} \geq$ 351 kHz to all applicable specifications are met when transitioning from Sleep Mode to Active Mode.

[7] t_{HOLD} is dependent on C_{LOAD}.

©2014 Knowles Electronics

3. MICROPHONE STATE DIAGRAM

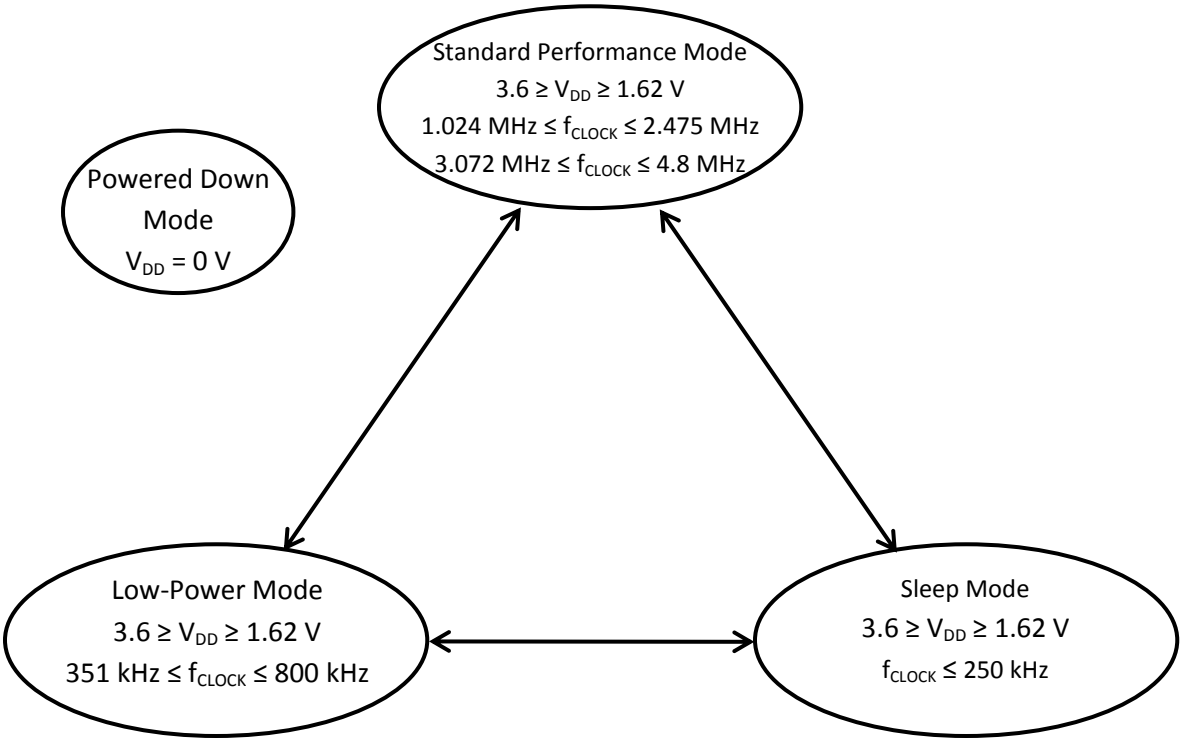

©2014 Knowles Electronics

4. FREQUENCY RESPONSE CURVE

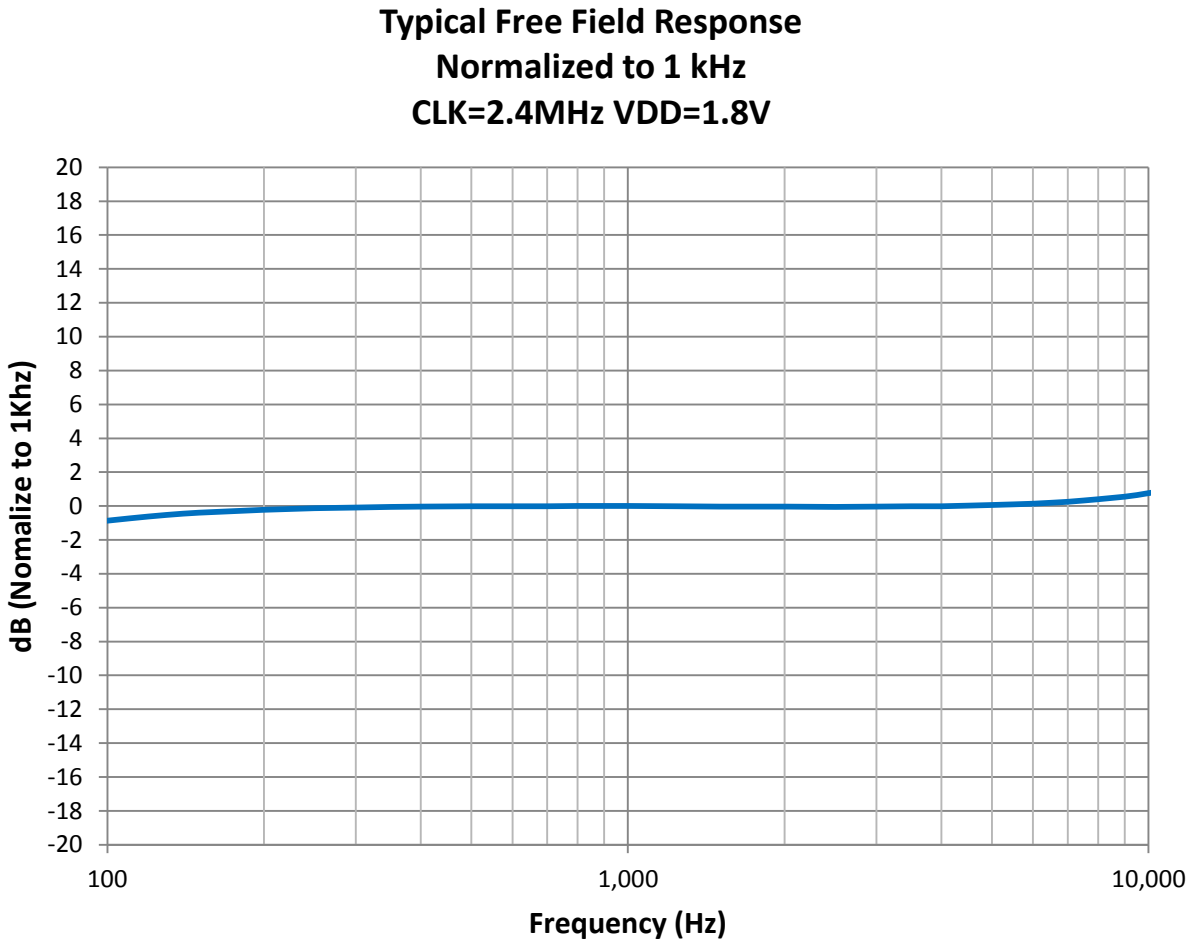

©2014 Knowles Electronics

5. INTERFACE CIRCUIT

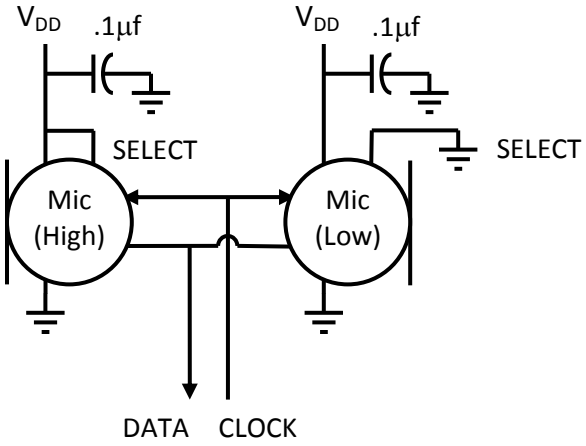

Microphone	SELECT	Asserts DATA On	Latch DATA On
Mic (High)	V_{DD}	Rising Clock Edge	Falling Clock Edge
Mic (Low)	GND	Falling Clock Edge	Rising Clock Edge

Note: Bypass capacitors near each Mic V_{DD} PIN are recommented to provide maximum SNR performance. It should not contain Class 2 dielectrics. Detailed information on acoustic, mechanical, and system integration can be found in the latest *SiSonic™ Design Guide* application note.

6. TIMING DIAGRAM

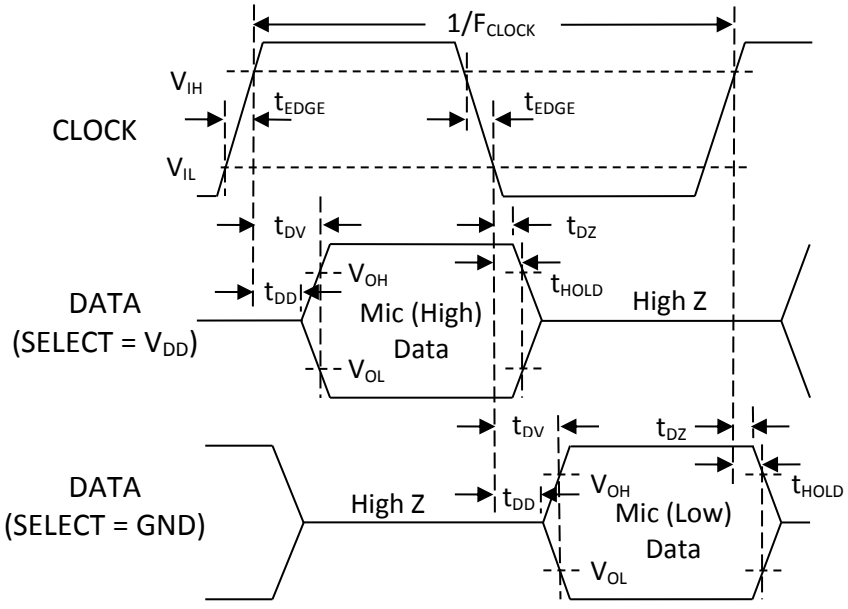

©2014 Knowles Electronics

7. MECHANICAL SPECIFI

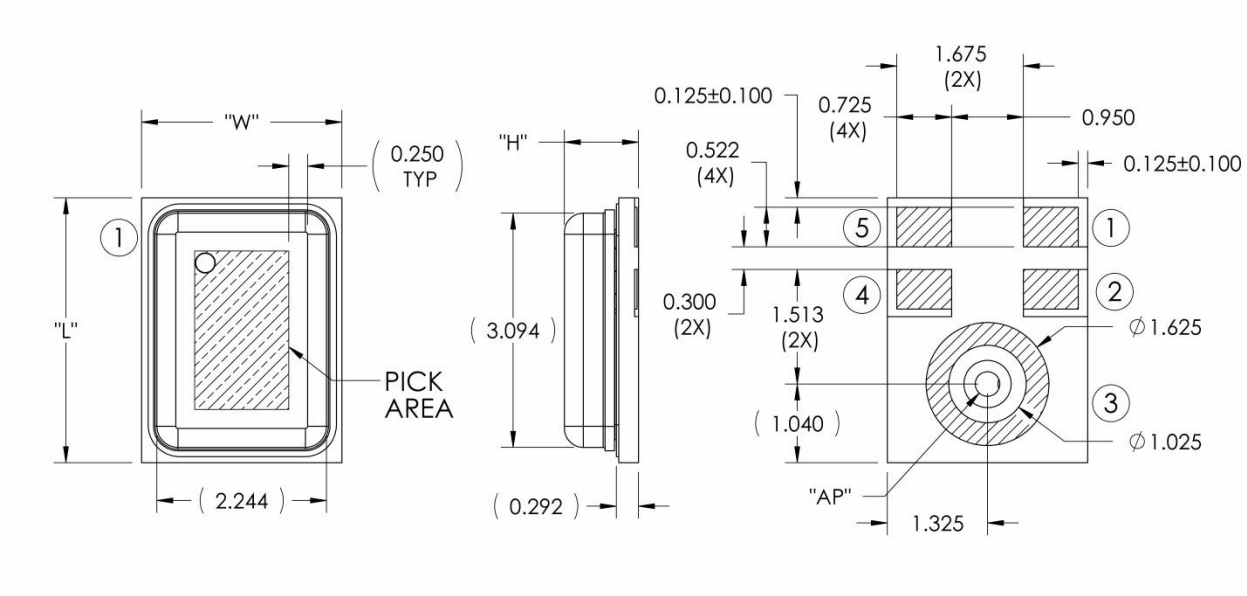

Item	Dimension	Tolerance
Length (L)	3.50	±0.10
Width (W)	2.65	±0.10
Height (H)	0.98	±0.10
Acoustic Port (AP)	Ø0.325	±0.05

Pin #	Pin Name	Type	Description
1	DATA	Digital O	PDM Output
2	SELECT	Digital I	Lo/Hi (L/R) Select This pin is internally pulled low but should not be left floating.
3	GROUND	Power	Ground
4	CLOCK	Digital I	Clock Input
5	V_{DD}	Power	Power Supply

Notes: Pick Area only extends to 0.25 mm of any edge or hole unless otherwise specified.

Dimensions are in millimeters unless otherwise specified.

Tolerance is ±0.15mm unless otherwise specified

©2014 Knowles Electronics

8. EXAMPLE LAND PATTERN

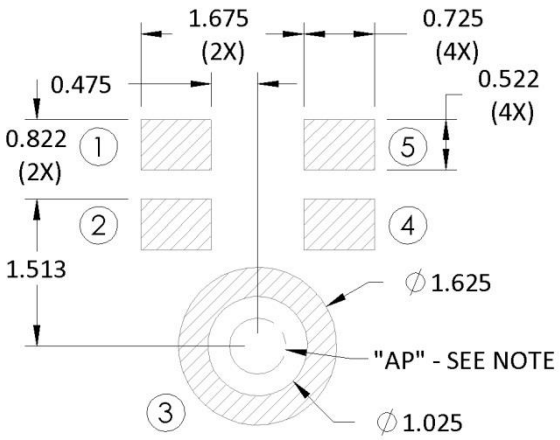

9. EXAMPLE SOLDER STENCIL PATTERN

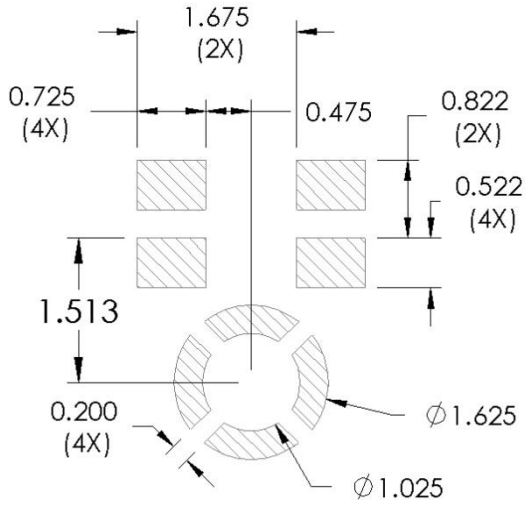

Notes: Dimensions are in millimeters unless otherwise specified.

Detailed information on AP size considerations can be found in the latest *SiSonic*™ *Design Guide* application note.

Further optimizations based on application should be performed.

©2014 Knowles Electronics

10. PACKAGING & MARKING DETAIL

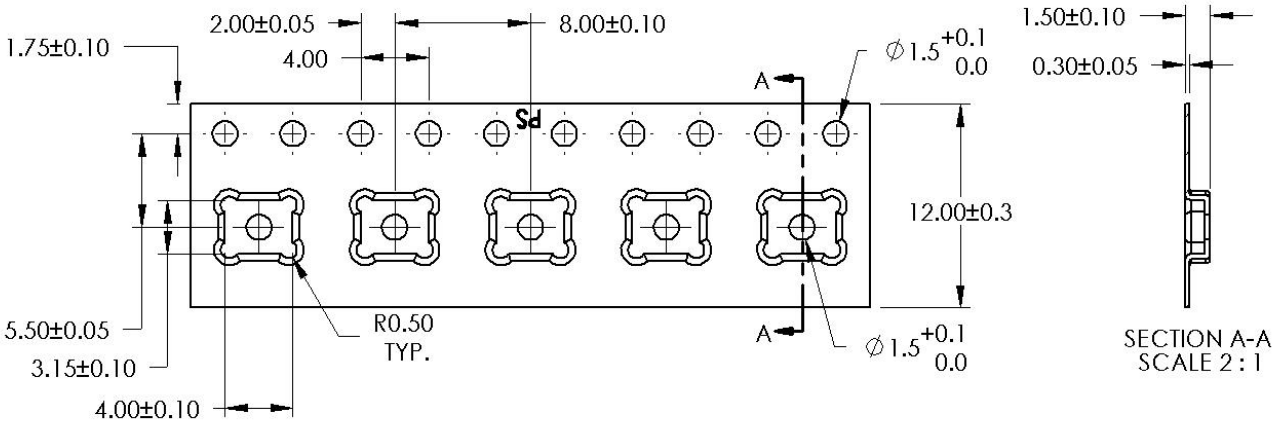

Model Number	Suffix	Reel Diameter	Quantity Per Reel
SPH0641LM4H-1	-8	13”	5,900

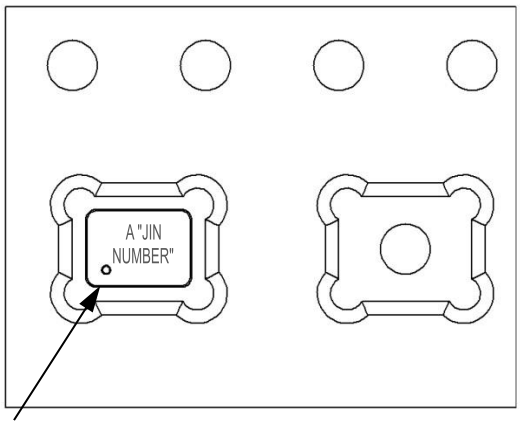

Alpha Character A:

“S”: Knowles SiSonic™ Production

“E”: Knowles Engineering Samples

“P”: Knowles Prototype Samples

“JIN NUMBER”:

Unique Job Identification Number for product traceability

Notes: Dimensions are in millimeters unless otherwise specified.

Vacuum pickup only in the pick area indicated in Mechanical Specifications.

Tape & reel per EIA-481.

Labels applied directly to reel and external package.

Shelf life: Twelve (12) months when devices are to be stored in factory supplied, unopened ESD moisture sensitive bag under maximum environmental conditions of 30°C, 70% R.H.

©2014 Knowles Electronics

11. RECOMMENDED REFLOW PROFILE

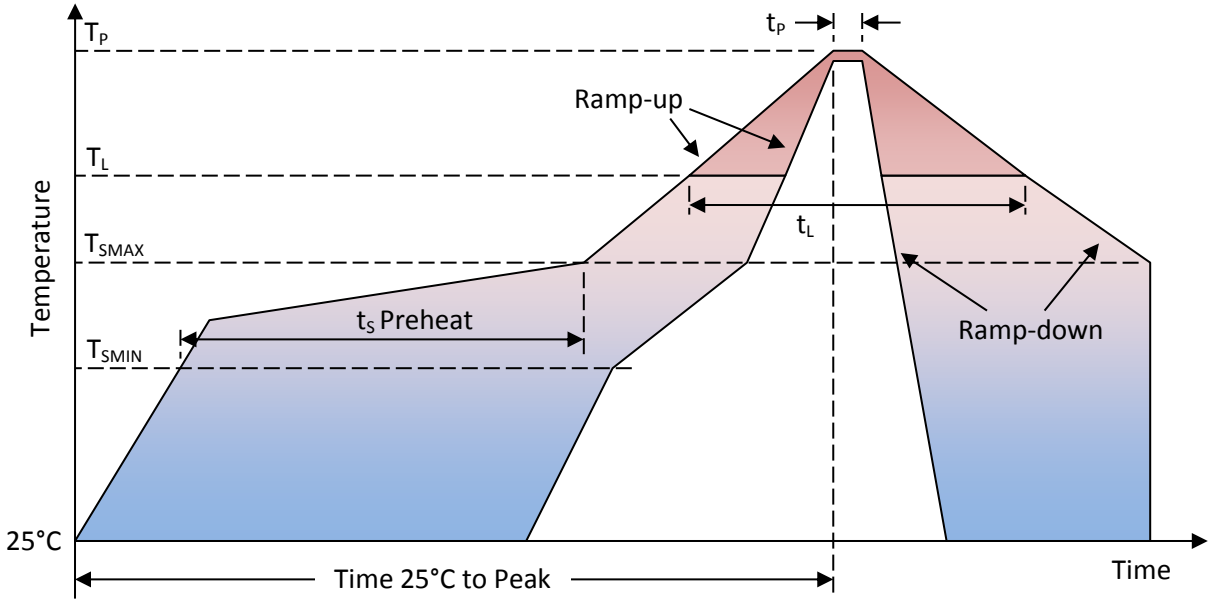

Profile Feature	Pb-Free
Average Ramp-up rate (T_{SMAX} to T_P)	3°C/second max.
Preheat • Temperature Min (T_{SMIN}) • Temperature Max (T_{SMAX}) • Time (T_{SMIN} to T_{SMAX}) (t_S)	 150°C 200°C 60-180 seconds
Time maintained above: • Temperature (T_L) • Time (t_L)	 217°C 60-150 seconds
Peak Temperature (T_P)	260°C
Time within 5°C of actual Peak Temperature (t_P)	20-40 seconds
Ramp-down rate (T_P to T_{SMAX})	6°C/second max
Time 25°C to Peak Temperature	8 minutes max

Notes: Based on IPC/JDEC J-STD-020 Revision C.
All temperatures refer to topside of the package, measured on the package body surface.

©2014 Knowles Electronics

12. ADDITIONAL NOTES

(A) MSL (moisture sensitivity level) Class 1.
(B) Maximum of 3 reflow cycles is recommended.
(C) In order to minimize device damage:

- Do not board wash or clean after the reflow process.
- Do not brush board with or without solvents after the reflow process.
- Do not directly expose to ultrasonic processing, welding, or cleaning.
- Do not insert any object in port hole of device at any time.
- Do not apply over 30 psi of air pressure into the port hole.
- Do not pull a vacuum over port hole of the microphone.
- Do not apply a vacuum when repacking into sealed bags at a rate faster than 0.5 atm/sec.

13. MATERIALS STATEMENT

Meets the requirements of the European RoHS directive 2011/65/EC as amended.

Meets the requirements of the industry standard IEC 61249-2-21:2003 for halogenated substances and Knowles Green Materials Standards Policy section on Halogen-Free.

Ozone depleting substances are not used in the product or the processes used to make the product, including compounds listed in Annex A, B, and C of the “Montreal Protocol on Substances That Deplete the Ozone Layer.”

©2014 Knowles Electronics

14. RELIABILITY SPECIFICATIONS

Test	Description
Thermal Shock	100 cycles air-to-air thermal shock from -40°C to +125°C with 15 minute soaks. (IEC 68-2-4)
High Temperature Storage	1,000 hours at +105°C environment (IEC 68-2-2 Test Ba)
Low Temperature Storage	1,000 hours at -40°C environment (IEC 68-2-2 Test Aa)
High Temperature Bias	1,000 hours at +105°C under bias (IEC 68-2-2 Test Ba)
Low Temperature Bias	1,000 hours at -40°C under bias (IEC 68-2-2 Test Aa)
Temperature / Humidity Bias	1,000 hours at +85°C/85% R.H. under bias. (JESD22-A101A-B)
Vibration	4 cycles of 20 to 2,000 Hz sinusoidal sweep with 20 G peak acceleration lasting 12 minutes in X, Y, and Z directions. (Mil-Std-883E, method 2007.2 A)
ESD-LID/GND	3 discharges of ±8 kV direct contact to lid while unit is grounded. (IEC 61000-4-2)
ESD-MM	3 discharges of ±200V direct contact to I/O pins. (ESD STM5.2)
Reflow	5 reflow cycles with peak temperature of +260°C
Mechanical Shock	3 pulses of 10,000 G in the X, Y, and Z direction (IEC 68-2-27, Test Ea)

Note: After reliability tests are performed, the sensitivity of the microphones shall not deviate more than 3 dB from its initial value.
After 3 reflow cycles, the sensitivity of the microphones shall not deviate more than 1 dB from its initial value.

©2014 Knowles Electronics

15. SPECIFICATION REVISIONS

Revision	Specification Changes	Date
A	Initial Release (C10115907)	04/17/14

Information contained herein is subject to change without notice. It may be used by a party at their own discretion and risk. We do not guarantee any results or assume any liability in connection with its use. This publication is not to be taken as a license to operate under any existing patents.

©2014 Knowles Electronics

Mouser Electronics

Authorized Distributor

Click to View Pricing, Inventory, Delivery & Lifecycle Information:

Knowles:

SPH0641LM4H-1