SPH0645LM4H-1 Rev A
Datasheet

SPH0645LM4H-1

I2S Output Digital Microphone

The SPH0645LM4H-1 is a miniature, low power, bottom port microphone with an I2S digital output. The solution consists of a proven high performance SiSonic™ acoustic sensor, a serial Analog to Digital convertor, and an interface to condition the signal into an industry standard 24-bit I2S format. The I2S interface simplifies the integration in the system and allow direct interconnect to digital processors, application processors and microcontrollerss. Saving the need of an external audio codec, the SPH0645LM4H-1 is perfectly suitable for portable applications where size and power consumption are a constraint.

Product Features

- High SNR of 65dB(A)
- Low Current of typ. 600µA
- I2S Output: Direct attach to µP
- Multi modes: standard >1MHz, 600uA / sleep <1kHz, 3uA
- Flat Frequency Response
- RF Shielded
- Supports Dual Microphones
- Ultra-Stable Performance
- Standard SMD Reflow
- Omnidirectional
- Bottom-Ported Microphone
- 3.50 x 2.65 x 0.98 mm SPH Package Size

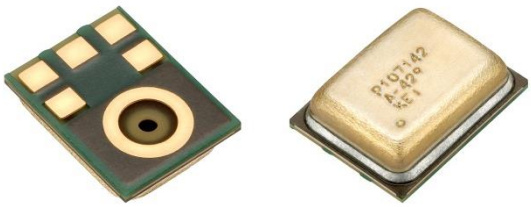

Typical Applications

- Small portable devices: wearables
- Set-top boxes: TV, gaming, remote controllers
- Smart home devices, Internet of Things, Connected equipment

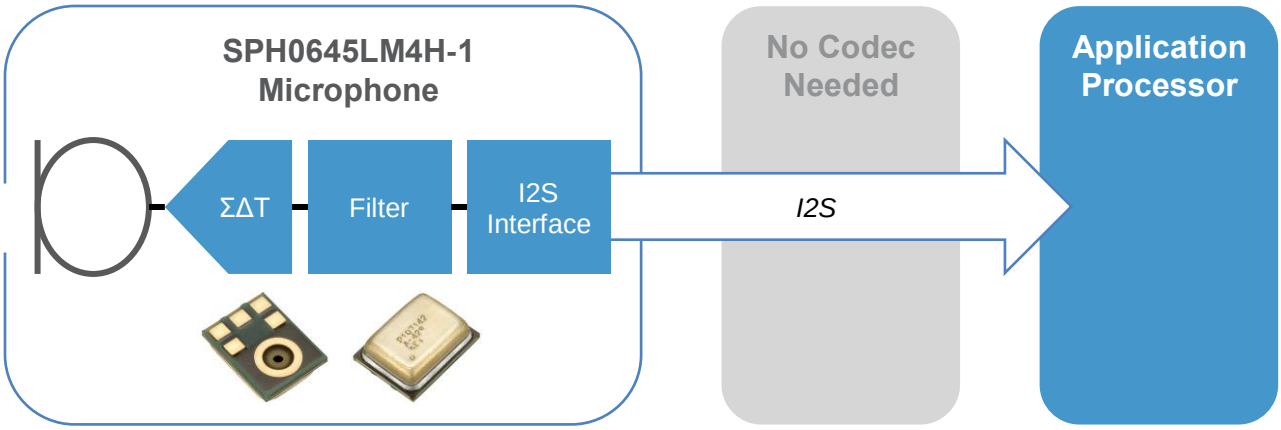

Absolute Maximum Ratings

Table 1: Absolute Maximum Ratings

Parameter	Absolute Maximum Rating	Units
VDD, BCLK, WS, SELECT to Ground	-0.3, +5.0	V
Input Current	±100	mA
Short Circuit to/from DATA	Indefinite to Ground or Vdd	Sec
Temperature	-40 to +100	ºC

Stresses exceeding these "Absolute Maximum Ratings" may cause permanent damage to the device. These are stress ratings only. Functional operation at these or any other conditions beyond those indicated under "Acoustic & Electrical Specifications" is not implied. Exposure beyond those indicated under "Acoustic & Electrical Specifications" for extended periods may affect device reliability.

Acoustic & Electrical Specifications[1]

Table 2: TEST CONDITIONS: 25 ±2°C, 55±20% R.H., VDD =1.8V, fCLOCK = 3.072 MHz with a 0.1uF decoupling capacitor across Vdd and GND, unless otherwise indicated

Parameter	Symbol	Conditions	Min.	Typ.	Max	Units
Directivity			Omnidirectional			
Polarity		Increasing sound pressure	Output Magnitude Increases			
Functional Temperature		Functional with lower performance	-40	-	100	°C
Operating Temperature		Specifications guaranteed	0	-	45	°C
Supply Voltage	V_{DD}		1.62	1.8	3.6	V
Clock Frequency	f_{CLOCK}		1024	3072	4096	kHz
Sleep Clock Frequency	f_{sleep}		-	-	1	KHz
Supply Current[2]	I_{DD}		-	600	-	µA
Sleep Current	$I_{DDSLEEEP}$		-	3	10	uA
Short Circuit Current	I_{SC}	Grounded DATA pin	2	-	10	mA
Sensitivity	S	94 dB SPL @ 1 kHz	-27	-26	-25	dBFS
Signal to Noise Ratio	SNR	94 dB SPL @ 1 kHz, A-weighted	-	65	-	dB(A)
DC Offset[6]		Fullscale = ±100	-	5	-	%
Total Harmonic Distortion	THD	94 dB SPL @ 1 kHz, S = Typ.	-	0.2	1	%
Total Harmonic Distortion	THD	1% THD	94	110		dB SPL
Acoustic Overload Point	AOP	10% THD @ 1 kHz, S = Typ.	-	120	-	dB SPL
Power Supply Rejection Ratio	PSRR	200 mVpp sine wave@1kHz	-	80	-	dB
Power Supply Rejection +Noise	PSR+N	100 mVpp 1/8th duty cycle rectangular wave@217 Hz, VDD = 1.8V, A-weighted	-	-86		dB(A)
Power-up Time[3,4,5]	$t_{POWERUP}$	V_{DD} ≥ V(min)	-	-	50	Ms

[1] Sensitivity and Supply Current are 100% tested.

[2] Idd varies with Cload according to: $\Delta Idd = 0.5*V_{DD}*\Delta Cload*f_{CLOCK}$.

[3] Valid microphones states are: Powered Down Mode (mic off), Sleep Mode (low current, DATA = high-Z, fast startup), and Active Mode.

[4] Time from Fclock < 1 kHz to Isleep specification is met when transitioning from Active Mode to Sleep Mode.

[5] Time from Fclock ≥ 1 MHz to all applicable specifications are met when transitioning from Sleep Mode to Active Mode.

[6] DC offset can be removed from the PCM samples if desired by implementing a DC-blocking or high-pass filter.

Microphone Interface Specifications

Table 3: TEST CONDITIONS: 25 ±2°C, 55±20% R.H., VDD =1.8V, fCLOCK = 3.072 MHz with a 0.1uF decoupling capacitor across Vdd and GND, unless otherwise indicated

Parameter	Symbol	Conditions	Min.	Typ.	Max	Units
Logic Input High	V_{IH}		0.65xV_{DD}	-	VDD+0.3	V
Logic Input Low	V_{IL}		-0.3	-	0.35xV_{DD}	V
Low→High Threshold	VL-H		0.55xVDD		0.65xVDD	V
High→Low Threshold	VH-L		0.35xVDD		0.45xVDD	V
Hysteresis Width	VHYST		0.10xVDD	-	0.29xVDD	V
Logic Output High	V_{OH}	I_{OUT} = 2 mA	0.7*V_{DD}	-	V_{DD}	V
Logic Output Low	V_{OL}	I_{OUT} = 2 mA	0	-	0.3 * V_{DD}	V
SELECT (high)			V_{DD} -0.2	-	V_{DD}	V
SELECT (low)			GND	-	GND+0.2	V
Select Input	C_{SELECT}				2	pF
Clock Input	C_{CLK}				2	pF
Clock Duty Cycle			40	50	60	%
Clock Rise/Fall Time (Input and Output)	t_{EDGE}	Measured from 0.1 to 0.9 V_{DD}	-	-	10	ns
TIE Clock Jitter	σ	Time Interval Jitter on CLK line			2	ns RMS
Output Load	C_{LOAD}		-	-	120	pF
Data Format	L	18-bit precision, the LSBs are filled with zeros		24		bits

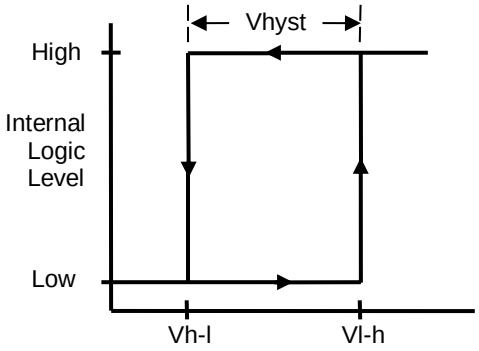

Figure 1: Hysteresis Diagram

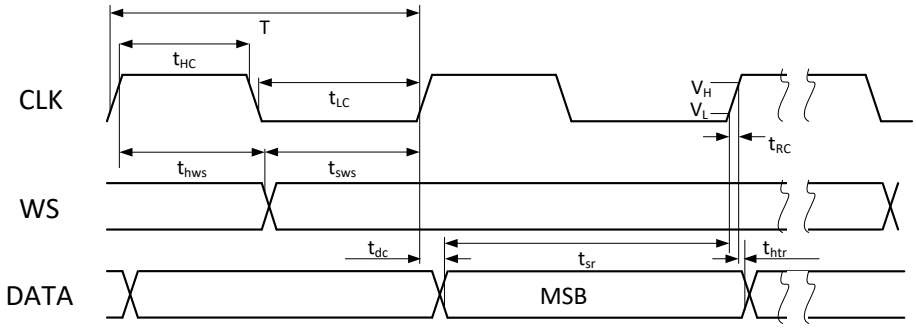

Figure 2: Timing Diagram

Parameter	Symbol	Min	Max	Unit	Notes
CLK Period	T	244.14	976.56	ns	
CLK Pulse Width High	t_{HC}	85.45		ns	35% of min.T(=244.14ns)
CLK Pulse Width Low	t_{LC}	85.45		ns	35% of min.T(=244.14ns)
WS setup time	t_{SWS}	85.45		ns	WS typically synchronized with CLK falling, should be equal to t_{BIL}
WS hold time	t_{HWS}	85.45		ns	WS typically synchronized with CLK falling, should be equal to t_{BIH}
Data Delay from CLK Rising Edge	t_{DC}		65.92	ns	
Receiver Setup time	t_{sr}	178.22		ns	
Transmitter Hold Time	t_{htr}	7		ns	
Clock Rise Time Measured from V_L to V_H	t_{RC}		3.75	ns	Performance is guaranteed only with SCK edge time <=3.75ns. For slower edge time, operation is guaranteed but performance will degrade.

Performance Curves

TEST CONDITIONS: 25 ±2°C, 55±20% R.H., VDD =1.8V, fCLOCK = 3.072 MHz with 0.1uF decoupling capacitor across Vdd and GND, unless otherwise indicated

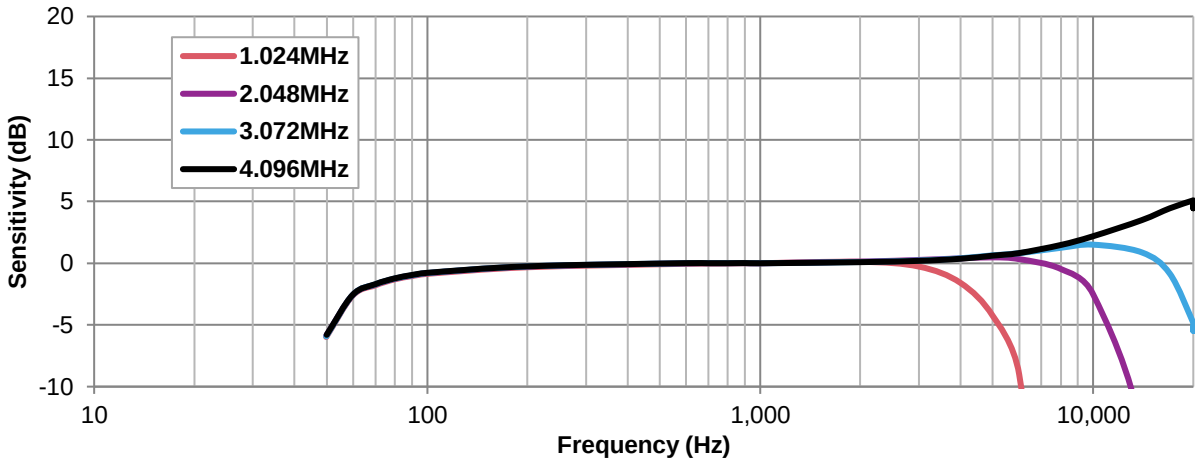

Figure 3: Typical Free Field Response Normalized to 1 kHz

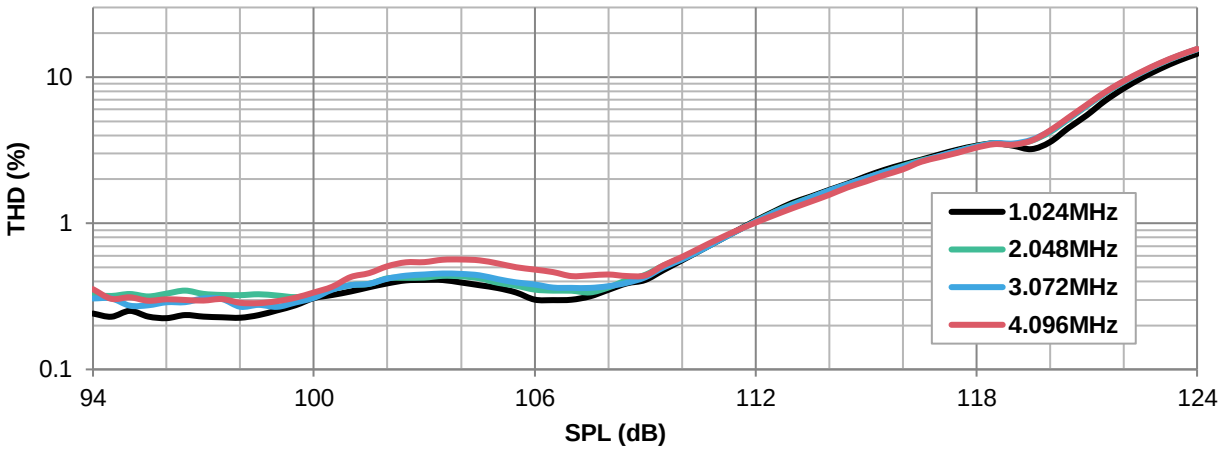

Figure 4: Typical THD vs Input SPL

Application Notes

Hardware Description

A block diagram of the I2S microphone is shown in Figure 5. The microphone consists of the following blocks, the MEMS transducer, the Charge Pump(red), the Amplifier(yellow), the Sigma Delta Convertor(green), the Decimator(orange), the Low Pass Filter(turquoise),and the Tri-state Control (gray).

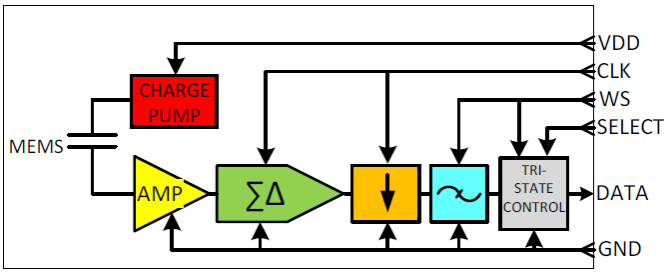

Figure 5: Block Diagram of the I2S Digital Mic

Operating Description

The I2S microphone operates as follows:

The Charge Pump(red) boosts VDD to a suitable level to bias the MEMS transducer.

The MEMs converts an input Sound Pressure Level (SPL) to a voltage.

The Amplifier (yellow) buffers the output voltage of the MEMs and provides sufficient drive to provide the Sigma Delta Convertor a stable signal.

The Sigma Delta Convertor (green) converts the buffered analog signal into a serial Pulse Density Modulated (PDM) signal.

The Decimator (orange) down-converts the PDM signal by a factor of 64, it also converts the single bit PDM signal to Multi-bit Pulse Code Modulated (PCM) signal.

The Low Pass Filter (turquoise), removes any remaining high frequency components in the PCM signal and improves the bandwidth of the Decimator output.

The Tri-state Control (gray) uses the state of the WS and SELECT inputs to determine if the DATA pin is driven or tri-stated. This allows 2 microphones to operate on a single I2S port. When SELECT = HIGH the DATA pin drives the SDIN bus when WS = HIGH otherwise DATA = tri-state. When SELECT = LOW the DATA pin drives the SDIN bus when WS = LOW otherwise DATA = tri-state.

Operating Modes

The I2S has 2 modes of operation which are determined by the clock frequency: normal and sleep mode. In addition, the I2S microphone can be turned off by removing power from the VDD pin. Figure 6 shows the various operating modes.

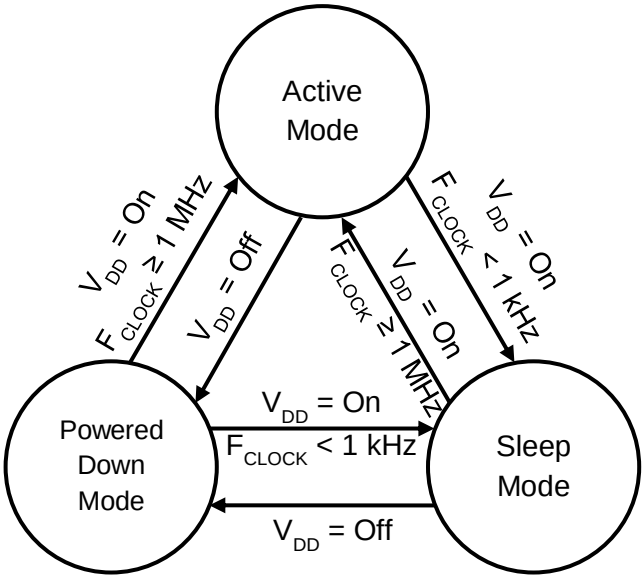

Figure 6: I2S Microphone State Diagram

Active Mode

When Vdd is applied the microphone senses the CLOCK line, if the frequency is greater than 1MHz, the microphone enters the normal mode of operation. In this mode, the I2S Master must provide the CLK and WS signals as the microphone is an I2S slave device.

Sleep Mode

When Vdd is applied the microphone senses the CLOCK line, if the frequency is less than 1KHz or completely off, the microphone enters the sleep mode of operation. In this mode, the microphone tri-states the DATA pin and turns off internal circuits to reduce power consumption.

Powered Down Mode

This mode is entered by removing Vdd from the microphone. The presence of CLK, WS and SELECT, have no effect on this mode and the DATA pin is tri-stated. The Powered Down Mic will not interfere with other devices on the I2S bus.

Interface Description

The SPH0645LM4H microphone operates as an I2S slave. The master must provide the BCLK and WS signals. The Over Sampling Rate is fixed at 64 therefore the WS signal must be BCLK/64 and synchronized to the BCLK. Clock frequencies from 1.024Mhz to 4.096MHz are supported so sampling rates from 16KHz to 64KHz can be had by changing the clock frequency.

The Data Format is I2S, 24-bit, 2's compliment, MSB first. The data precision is 18 bits; unused bits are zeros.

The SELECT pin determines when the microphone drives the Data pin. When SELECT = HIGH the Data pin is driven when the WS = HIGH, otherwise it is tri-stated (high impedance). When operating a single microphone on an I2S bus, a pull down resistor (100K Ohms) should be placed from the Data pin to ground to insure the bus capacitance is discharged.

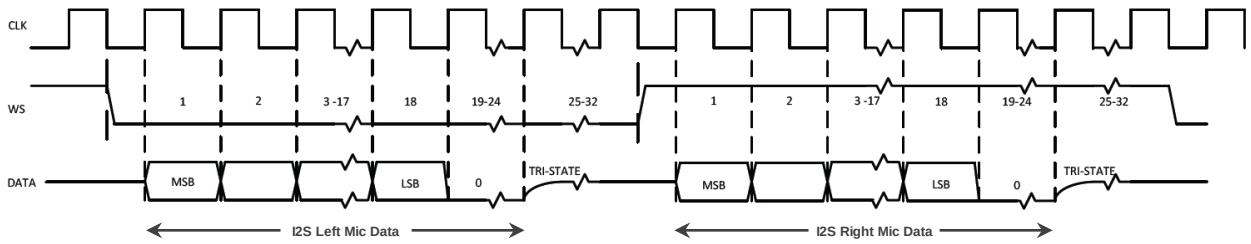

Figure 7: Timing Diagram

System Connections

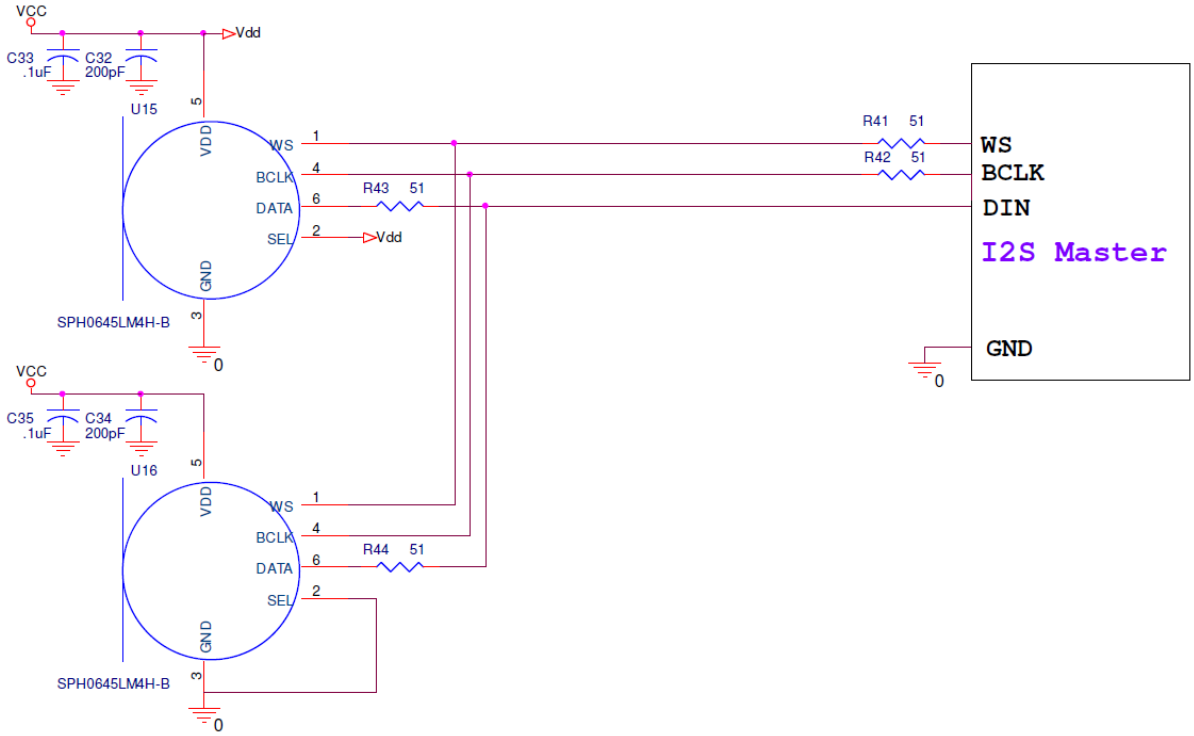

Figure 8: System (Stereo) Connections

Notes:
1. Decoupling capacitors (C33, C35) mounted as close as possible are required for optimum SNR.
2. RF filter Capacitors (C32,C34) in the range of 20-200pF may be needed depending on the RF environment.
3. If both decoupling and RF filter capacitors are used, the RF filter capacitors should be the closest to the microphone.
4. Detailed information on acoustic, mechanical, and system integration can be found in the latest *SiSonic™ Design Guide* application note.

System Connections Cont'd

Figure 8 shows how two I2S Microphones can be connected on a single I2S bus. R41–R44 are included to dampen or terminate their respective traces. If the traces are electrically long then they should be controlled impedance traces with impedance in the 50-120 Ohm range. Traces are considered electrically long when the length of the trace (in inches) is greater than 2 times the rise/fall time (in nS). Even if the traces are not electrically long, R41-R44 can be used as dampening resistors (27-51 Ohms) to improve signal integrity by reducing overshoots and ringing caused by stray inductance and capacitance. In either case, R41-R44 are to be placed as close as possible to the device that drives the trace (signal source). The decoupling capacitors (C32-33, and C34-35) are most effective if the trace inductance between the capacitor and microphone is minimized. This can be accomplished by using short, wide traces. If a ground plane is used under the microphone, then connect the capacitor ground pads directly to the plane with vias without any trace used.

I2S Timing and Port Configuration Guidelines

- BCLK period must be in the range shown in Figure 2 and the table below it
- WS must be synchronized (changing) on the falling edge of BCLK
- WS must be BCLK/64
- The Hold Time (see Figure 2) must be greater than the Hold Time of the Receiver
- The mode must be I2S with MSB delayed 1 BCLK cycle after WS changes

Layout Guidelines

Good layout techniques are required for optimal noise, distortion, and signal integrity. Suggested layout guidelines are described in Knowles' Multi-Mode Digital Microphone SPH0641LM4H-B Application Note.

.

Mechanical Specifications

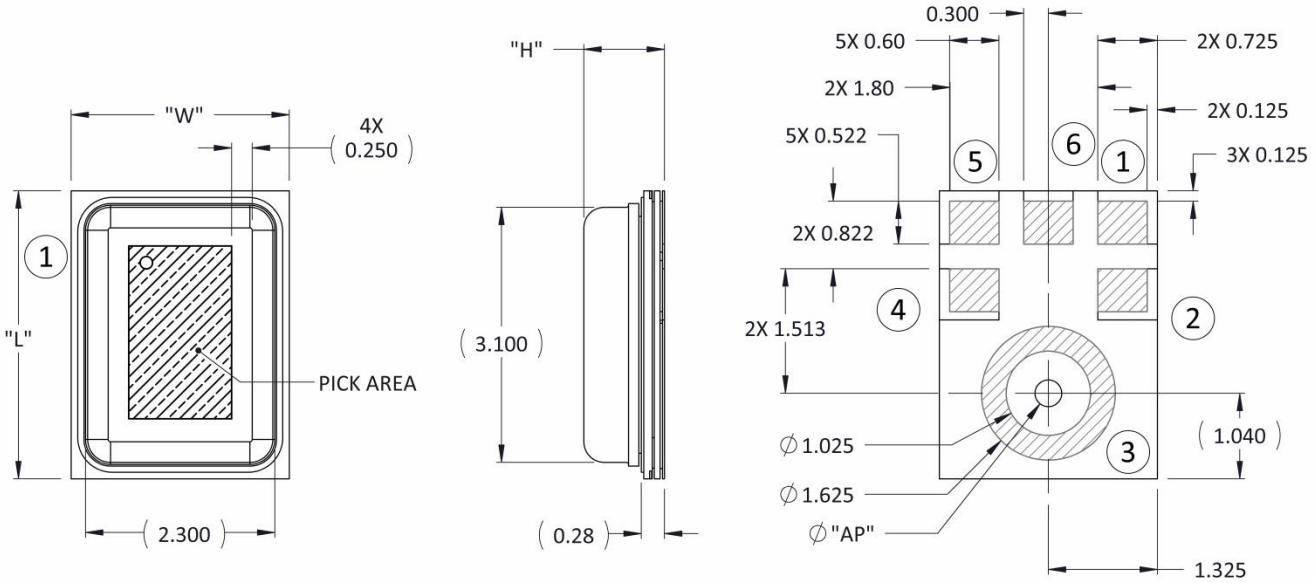

Item	Nominal	Tolerance	Units
Length (L)	3.50	±0.10	mm
Width (W)	2.65	±0.10	mm
Height (H)	0.98	±0.10	mm
Acoustic Port Diameter (AP)	0.325	±0.05	mm

Pin #	Pin Name	Type	Description
1	WS	Digital Input	Word Strobe
2	SELECT	Digital Input	Select L/R
3	GND	Power	Ground
4	BCLK	Digital Input	Bit Clock
5	V_{DD}	Power	Power Supply
6	Data Out	Digital Output	Digital Data Output

Example Land Pattern

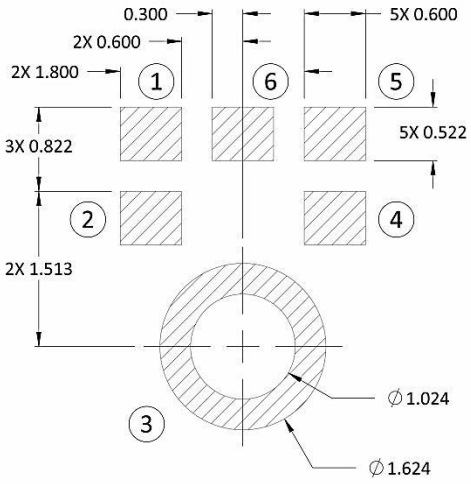

Example Solder Stencil Pattern

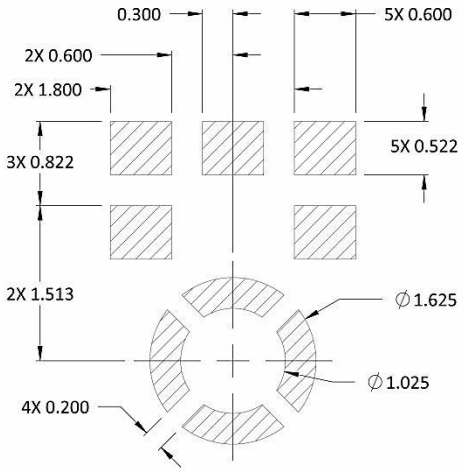

Notes:
Pick Area only extends to 0.25 mm of any edge or hole unless otherwise specified.
Dimensions are in millimeters unless otherwise specified.
Tolerance is ±0.15mm unless otherwise specified
Detailed information on AP size considerations can be found in the latest *SiSonic™ Design Guide* application note.
Further optimizations based on application should be performed.

Packaging & Marking Detail

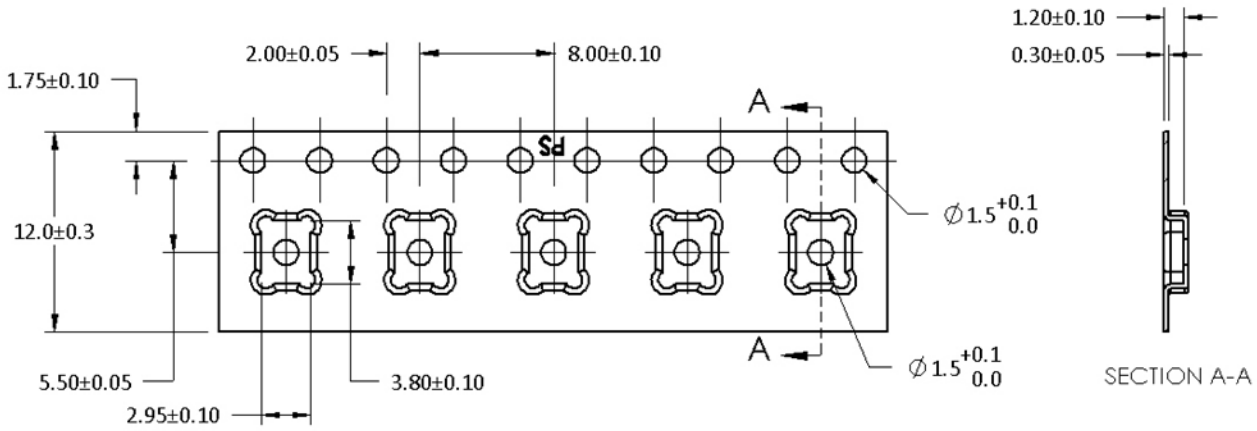

Model Number	Suffix	Reel Diameter	Quantity Per Reel
SPH0645LM4H-1	8	13”	5900

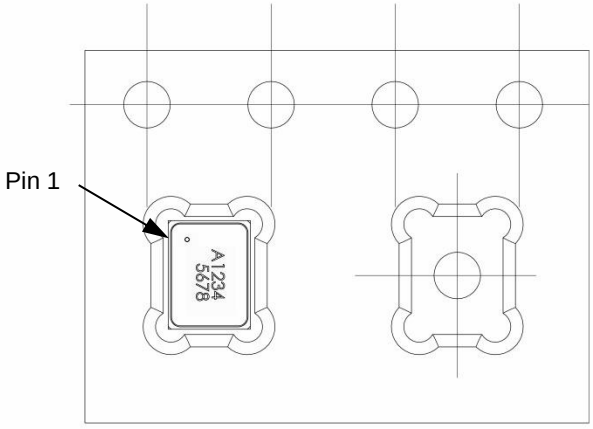

Alpha Character A:
- “S”: Knowles SiSonic™ Production
- “E”: Knowles Engineering Samples
- “P”: Knowles Prototype Samples

“12345678”:
- Unique Job Identification Number for product traceability

Notes:
- Dimensions are in millimeters unless otherwise specified.
- Vacuum pickup only in the pick area indicated in Mechanical Specifications.
- Tape & reel per EIA-481.
- Labels applied directly to reel and external package.
- Shelf life: Twelve (12) months when devices are to be stored in factory supplied, unopened ESD moisture sensitive bag under maximum environmental conditions of 30°C, 70% R.H.

Recommended Reflow Profile

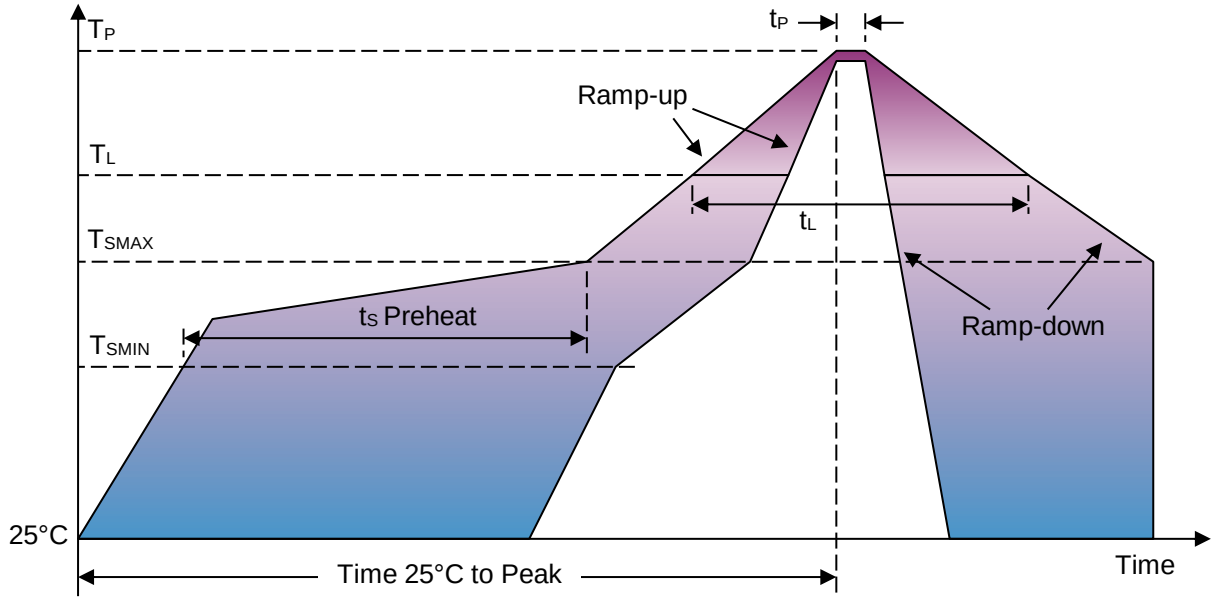

Profile Feature	Pb-Free
Average Ramp-up rate (T_{SMAX} to T_P)	3°C/second max.
Preheat • Temperature Min (T_{SMIN}) • Temperature Max (T_{SMAX}) • Time (T_{SMIN} to T_{SMAX}) (t_S)	 150°C 200°C 60-180 seconds
Time maintained above: • Temperature (T_L) • Time (t_L)	 217°C 60-150 seconds
Peak Temperature (T_P)	260°C
Time within 5°C of actual Peak Temperature (t_P)	20-40 seconds
Ramp-down rate (T_P to T_{SMAX})	6°C/second max
Time 25°C to Peak Temperature	8 minutes max

Notes: Based on IPC/JDEC J-STD-020 Revision C.
All temperatures refer to topside of the package, measured on the package body surface

Additional Notes

(A) MSL (moisture sensitivity level) Class 1.
(B) Maximum of 3 reflow cycles is recommended.
(C) In order to minimize device damage:

- Do not board wash or clean after the reflow process.
- Do not brush board with or without solvents after the reflow process.
- Do not directly expose to ultrasonic processing, welding, or cleaning.
- Do not insert any object in port hole of device at any time.
- Do not apply over 30 psi of air pressure into the port hole.
- Do not pull a vacuum over port hole of the microphone.
- Do not apply a vacuum when repacking into sealed bags at a rate faster than 0.5 atm/sec.

.

Materials Statement

Meets the requirements of the European RoHS directive 2011/65/EC as amended.

Meets the requirements of the industry standard IEC 61249-2-21:2003 for halogenated substances and Knowles Green Materials Standards Policy section on Halogen-Free.

Ozone depleting substances are not used in the product or the processes used to make the product, including compounds listed in Annex A, B, and C of the “Montreal Protocol on Substances That Deplete the Ozone Layer.”

Reliability Specifications

Test	Description
Reflow	5 reflow cycles with peak temperature of +260°C
High Temperature Storage	+105°C environment for 1,000 hours (IEC 68-2-2 Test Ba)
Low Temperature Storage	-40°C environment for 1,000 hours (IEC 68-2-1 Test Aa)
High Temperature Bias	+105°C environment while under bias for 1,000 hours (IEC 68-2-2 Test Ba)
Low Temperature Bias	-40°C environment while under bias for 1,000 hours (IEC 68-2-1 Test Aa)
Temperature/Humidity Bias	+85°C/85% R.H. environment while under bias for 1,000 hours (JESD22-A101A-B)
Thermal Shock	100 cycles of air-air thermal shock from -40°C to +125°C with 15 minute soaks (IEC 68-2-4)
Tumble Test	300 Random Drops of Test Box on to Steel Base from 1.0m, 10 Tumbles/Minute
Vibration	16 minutes in each X, Y, Z axis from 20 to 2,000 Hz with peak acceleration of 20 G (MIL 883E, Method 2007.2,A)
Mechanical Shock	3 pulses of 10,000 G in each of the X, Y, and Z directions (IEC 68-2-27 Test Ea)
ESD-HBM	3 discharges of ±2kV direct contact to I/O pins (MIL 883E, Method 3015.7)
ESD-LID/GND	3 discharges of ±8kV direct contact to lid while unit is grounded (IEC 61000-4-2)
ESD-MM	3 discharges of ±200V direct contact to IO pins (ESD STM5.2)

Notes: Microphones must meet all acoustic and electrical specifications before and after reliability testing.
After 3 reflow cycles, the sensitivity of the microphones shall not deviate more than 1 dB from its initial value.

Specification Revisions

Revision	Specification Changes	Date
A	Initial Release	8/27/2019

Information contained herein is subject to change without notice. It may be used by a party at their own discretion and risk. We do not guarantee any results or assume any liability in connection with its use. This publication is not to be taken as a license to operate under any existing patents.

Model/Reference Number:
Datasheet SPH0645LR4H-1 Rev A
© Copyright 2017 Knowles
Phone: (630) 250-5100
Fax: (630) 250-0575
sales@knowles.com

Knowles
1151 Maplewood Drive
Itasca, Illinois 60143