Laird TECHNOLOGIES

Innovative **Technology** for a **Connected** World

Large Enclosure
Fingerstock Gaskets

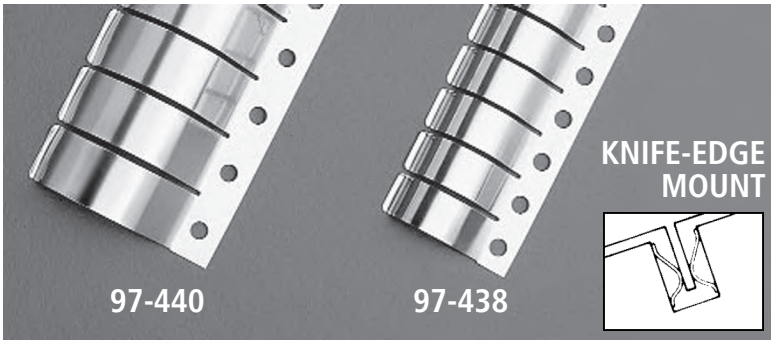

FINGERSTOCK GASKETS AND METAL GROUNDING PRODUCTS

As the world's leading fabricator of fingerstock, Laird Technologies has developed highly sophisticated, and often proprietary, shielding and grounding technology.

Our innovations are necessary to achieve outstanding combinations of performance parameters. From a vast selection of product configurations, platings and mounting techniques, to a full range of low compression force requirements and high transfer impedance characteristics, there is a Laird Technologies gasket or grounding product just right for the job.

These standard beryllium copper contact gaskets offer ideal RFI/EMI shielding of doors and movable components in electronic shielded rooms, trailers, computers and communication equipment.

They have been scientifically designed for wiping closures, but are also usable in compression applications. Moreover, these contact strips feature extremely good endurance life, as well as a high deflection range. In tests, attenuation up to 112 dB has been measured for a 100 MHz plane wave. Fastening of the strip is usually accomplished using screws or rivets. Soldering is optional.

Both are available in continuous lengths to a maximum of 25.0 ft. (7.6 m) and in all standard finishes.

These 97-Series products are also available in UltraSoft® low compression force 98-Series.

global solutions: local support™

USA: +1.866.928.8181
Europe: +49.0.8031.2460.0
Asia: +86.755.2714.1166

www.lairdtech.com

Laird TECHNOLOGIES®

Innovative **Technology** for a **Connected** World

Large Enclosure
Fingerstock Gaskets

PHYSICAL PROPERTIES

SERIES	A REF	B MIN	C	D	E	F	G	H DIA	I	L	APPROX LENGTH FT (M)
97-438	1.090 (27.686)	0.250 (6.350)	0.005 (0.127)	0.375 (9.525)	0.040 (1.016)	0.160 (4.064)	0.380 (9.652)	0.140 (3.556)	1.270 (32.258)	0.080 (2.032)	25.000 (7.6)
97-440	1.630 (41.402)	0.410 (10.414)	0.007 (0.178)	0.500 (12.700)	0.040 (1.016)	0.190 (4.826)	0.500 (12.700)	0.140 (3.556)	1.900 (48.260)	0.100 (2.540)	25.000 (7.6)

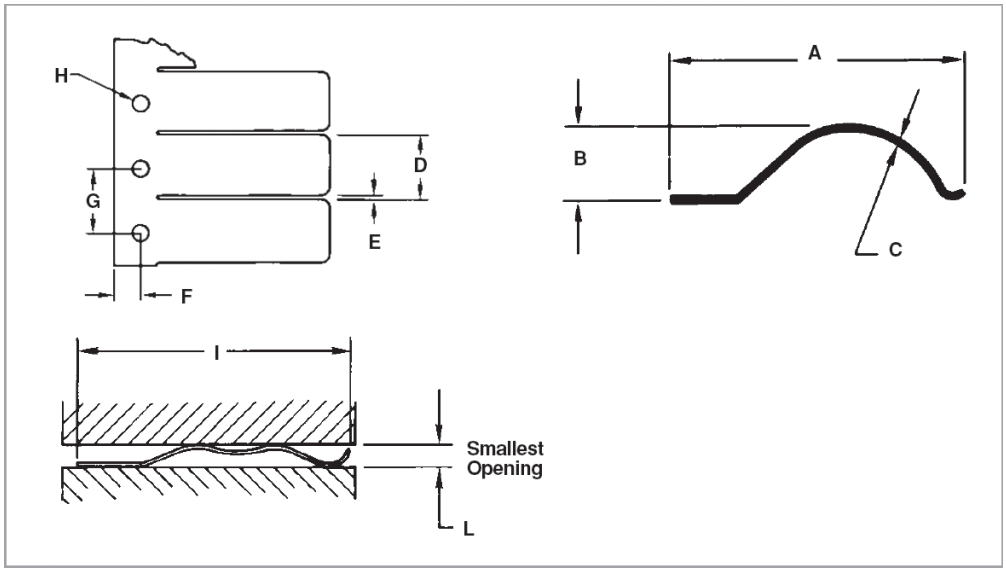

Any information furnished by Laird Technologies, Inc. and its agents is believed to be accurate and reliable. All specifications are subject to change without notice. Responsibility for the use and application of Laird Technologies materials rests with the end user. Laird Technologies makes no warranties as to the fitness, merchantability, suitability or non-infringement of any Laird Technologies materials or products for any specific or general uses. Laird Technologies shall not be liable for incidental or consequential damages of any kind. All Laird Technologies products are sold pursuant to the Laird Technologies' Terms and Conditions of sale in effect from time to time, a copy of which will be furnished upon request. © Copyright 2012 Laird Technologies, Inc. All Rights Reserved. Laird, Laird Technologies, the Laird Technologies Logo, and other marks are trade marks or registered trade marks of Laird Technologies, Inc. or an affiliate company thereof. Other product or service names may be the property of third parties. Nothing herein provides a license under any Laird Technologies or any third party intellectual property rights.