LI0402E800R-10

PHYSICAL DIMENSIONS:

A	1.01 [.040]	±	0.18 [.007]
B	0.50 [.020]	±	0.20 [.008]
C	0.50 [.020]	±	0.20 [.008]
D	0.30 [.012]	±	MAX.

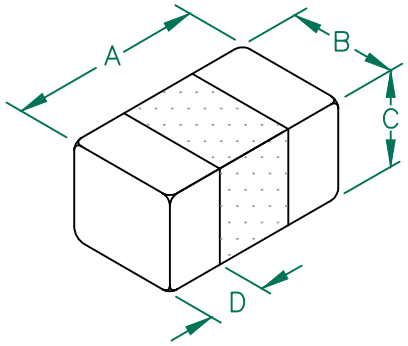

ELECTRICAL CHARACTERISTICS:

	Z @ 100MHz (Ω)	DCR (Ω)	Rated Current
Nominal	80		
Minimum	60		
Maximum	100	0.17	500 mA

NOTES: UNLESS OTHERWISE SPECIFIED

1. TAPED AND REELED per CURRENT EIA SPECIFICATIONS 7" REELS, 10,000 PCS/REEL, PAPER TAPE.
2. TERMINATION FINISH IS 100% TIN.
3. COMPONENTS SHOULD BE ADEQUATELY PREHEATED BEFORE SOLDERING.
4. OPERATING TEMP. RANGE: −40°C~+125°C (INCLUDING SELF−HEATING)
5. COSMETIC SPECIFICATION REFER TO WI−QA−124.

Z vs. FREQUENCY
IMPEDANCE UNDER DC BIAS

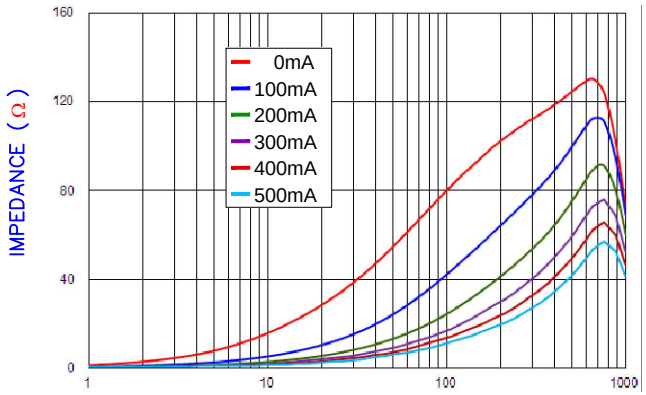

|Z| , R, AND XL vs. FREQUENCY

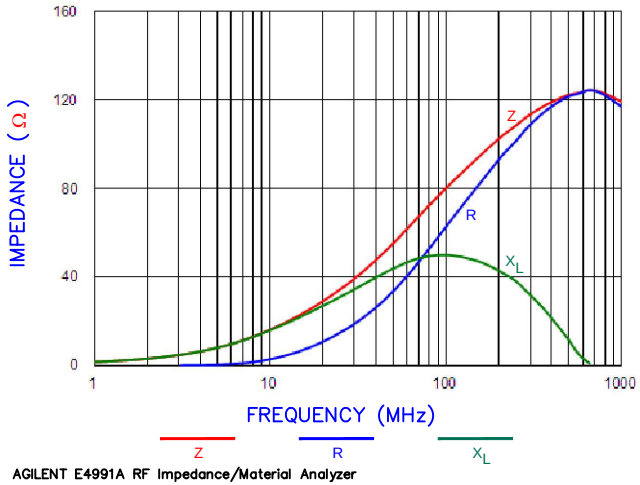

AGILENT E4991A RF Impedance/Material Analyzer
AGILENT 16194A Test Fixture.

LAND PATTERNS FOR REFLOW SOLDERING

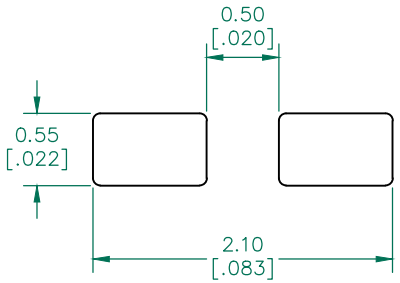

(For wave soldering, add 0.762 [.030] to this dimension.)

RECOMMENDED SOLDERING CONDITIONS

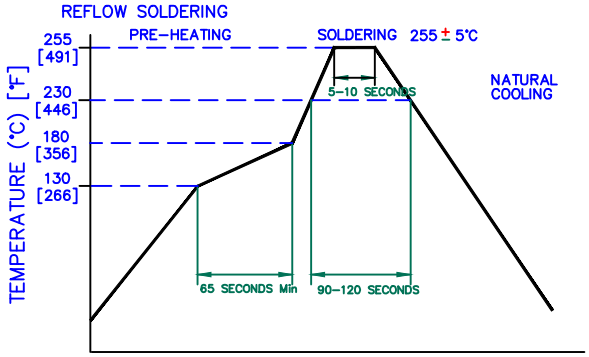

RoHS

DIMENSIONS ARE IN mm [INCHES].			
A	ORIGINAL DRAFT	05/16/13	QU
REV	DESCRIPTION	DATE	INT

This print is the property of Laird Tech. and is loaned in confidence subject to return upon request and with the understanding that no copies shall be made without the written consent of Laird Tech. All rights to design or invention are reserved.

Laird

PROJECT/PART NUMBER:	REV	PART TYPE:	DRAWN BY:
LI0402E800R−10	A	CO−FIRE	QU

DATE:	SCALE:	SHEET:
05/16/13	NTS	1 of 1

CAD # LI0402E800R−10−A
TOOL # −