JOHNSON ELECTRIC

801 Scholz Drive
Vandalia,Ohio 45377
937.898.3621
johnsonelectric.com

Tubular Solenoid 75

PUSH TYPE

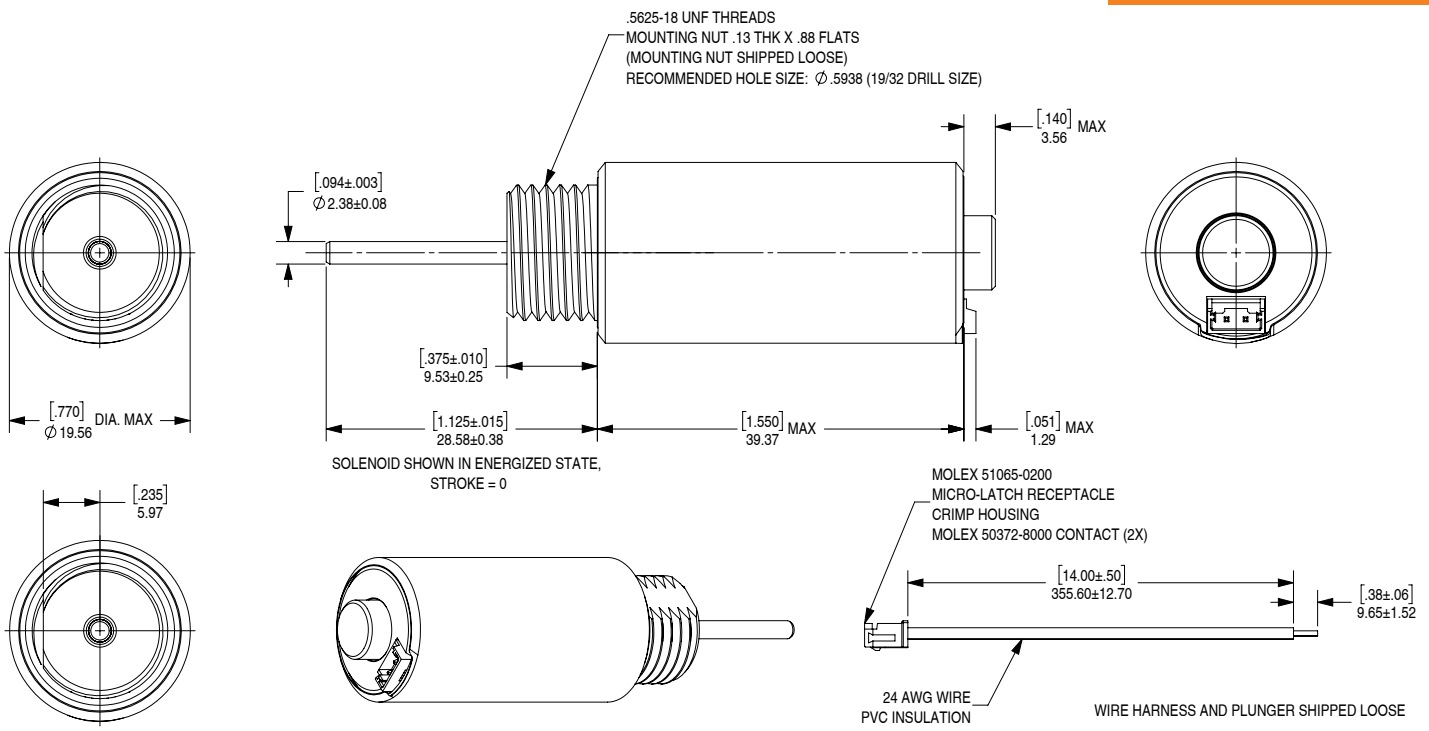

Part No.	Duty Cycle	Ampere Turns[4]	Max. ON Time *Continuous Pulse* (sec.)[1]	Max. ON Time *Single Pulse* (sec.)	Voltage (V)[3]	Resistance (Ω)	Power (W)	Current (A)
1671-9A20002	25%	1700	25	63	7.7	2.1	28	3.62
	100%	855	∞	∞	3.9		7	1.83
1671-9A40004	25%	1700	25	63	18.7	12.5	28	1.50
	100%	855	∞	∞	9.4		7	0.75
1671-9A60006	25%	1700	25	63	24.0	20.7	28	1.16
	100%	855	∞	∞	12.0		7	0.58

Typical Push Force - lbf (N)[2]							
Stroke - in.(mm)	*0.000 (0.00)*	*0.100 (2.54)*	*0.200 (5.08)*	*0.300 (7.62)*	*0.400 (10.16)*	*0.500 (12.70)*	*0.600 (15.24)*
Continuous Duty	2.125 (9.45)	0.875 (3.89)	0.375 (1.67)	0.250 (1.11)	0.188 (0.83)	0.125 (0.56)	0.100 (0.44)
Intermittent Duty	3.750 (16.68)	2.625 (11.68)	1.688 (7.51)	1.088 (4.84)	0.813 (3.62)	0.625 (2.78)	0.438 (1.95)

Performance

Dielectric Strength 1000Vrms

Recommended Minimum Heat Sink: Maximum watts dissipated by solenoid are based on an unrestricted flow of air at 20˚C, with solenoid mounted on the equivalent of an aluminum plate measuring 3” square by 1/8”

Class B Insulation System

[1] Continuously pulsed at stated watts and duty cycle

[2] All values shown are average at 20°C

[3] Other voltages available (please consult factory)

[4] Reference number of turns

RoHS Compliant *Made in Ohio, USA*