LITEON®
OPTOELECTRONICS



Photocoupler

Product Data Sheet

LTV-8141 8241 8441 (M, S, S-TA1, S-TA, S-TP) Series

Spec No.: DS-70-96-0014

Effective Date: 06/21/2013

Revision: F

LITE-ON DCC

RELEASE

BNS-OD-FC001/A4

LITE-ON Technology Corp. / Optoelectronics
No.90,Chien 1 Road, Chung Ho, New Taipei City 23585, Taiwan, R.O.C.
Tel: 886-2-2222-6181 Fax: 886-2-2221-1948 / 886-2-2221-0660
http://www.liteon.com/opto

FEATURES

* AC input response
* High current transfer ratio
  (CTR : MIN. 600% at $I_F = \pm 1mA$, $V_{CE} = 2V$)
* High input-output isolation voltage
  ($V_{iso} = 5{,}000Vrms$)
* Response time
  (t_r : TYP. 60μs at $V_{CE} = 2V$, $I_C = 10mA$, $R_L = 100\Omega$)
* Dual-in-line package :
  LTV-8141 : 1-channel type
  LTV-8241 : 2-channel type
  LTV-8441 : 4-channel type
* Wide lead spacing package :
  LTV-8141M : 1-channel type
  LTV-8241M : 2-channel type
  LTV-8441M : 4-channel type
* Surface mounting package :
  LTV-8141S : 1-channel type
  LTV-8241S : 2-channel type
  LTV-8441S : 4-channel type
* Tape and reel packaging :
  LTV-8141S-TA1, LTV-8241S-TA1
  LTV-8141S-TA, LTV-8141S-TP
* Safety approval
  UL / TUV / FIMKO / NEMKO / DEMKO / SEMKO / VDE* approved
  ***Required "V" ordering option**
* RoHS compliant

OUTLINE DIMENSIONS

LTV-8141 :

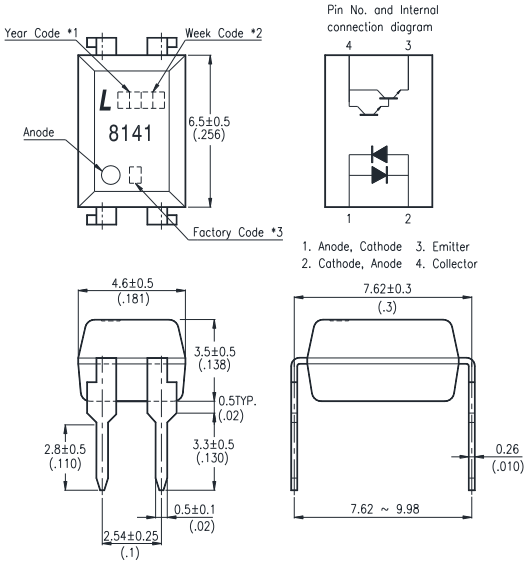

LTV-8241 :

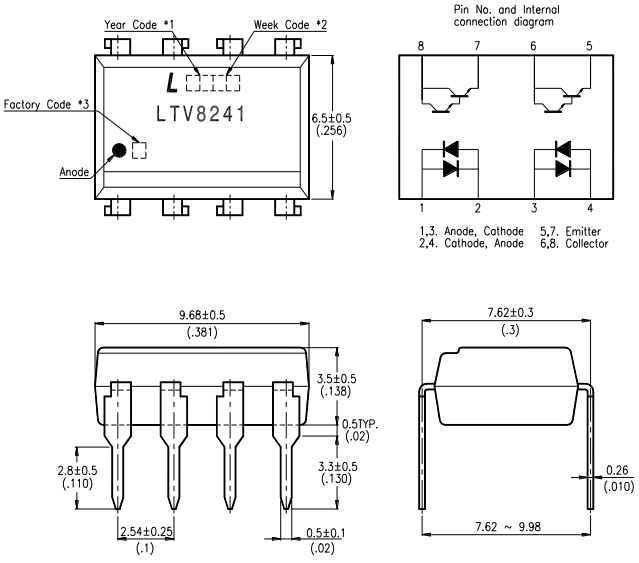

*1. Year date code.
*2. 2-digit work week.
*3. Factory identification mark shall be marked.
(W: China-CZ, X : China-TJ, Y : Thailand)

OUTLINE DIMENSIONS

LTV-8441 :

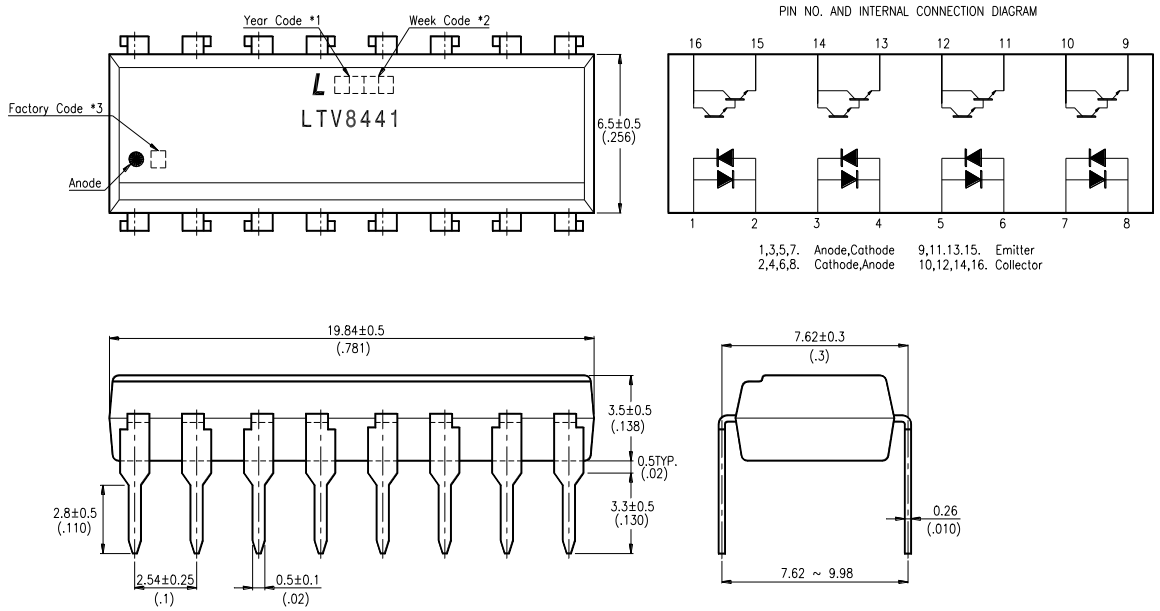

LTV-8141M :

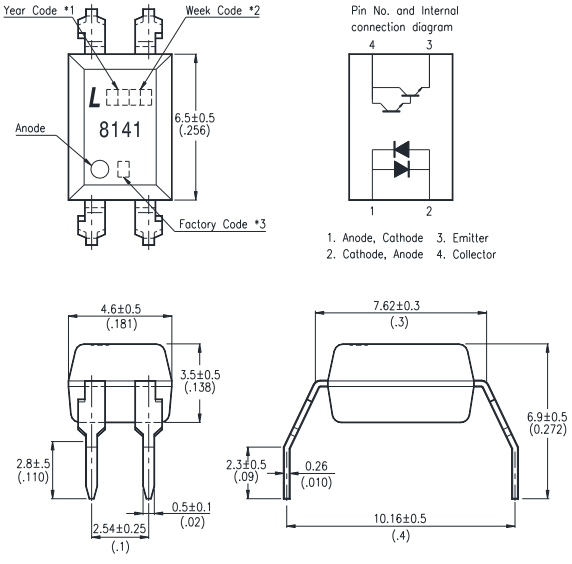

*1. Year date code.
*2. 2-digit work week.
*3. Factory identification mark shall be marked.
(W: China-CZ, X : China-TJ, Y : Thailand)

OUTLINE DIMENSIONS

LTV-8241M :

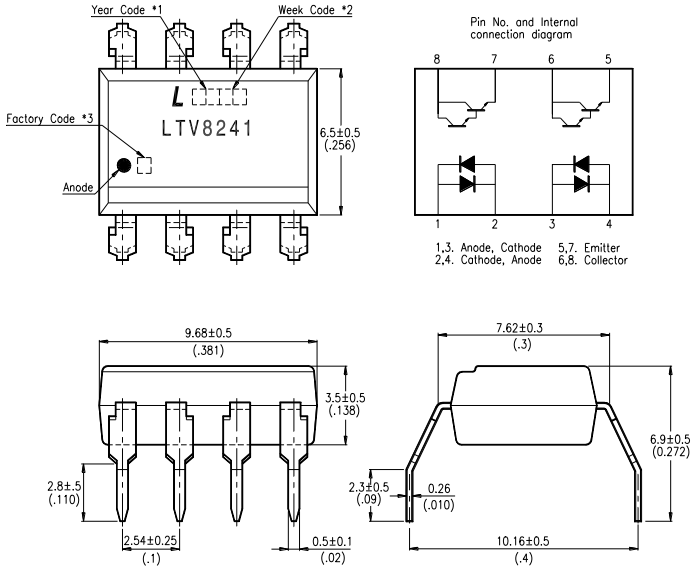

LTV-8441M :

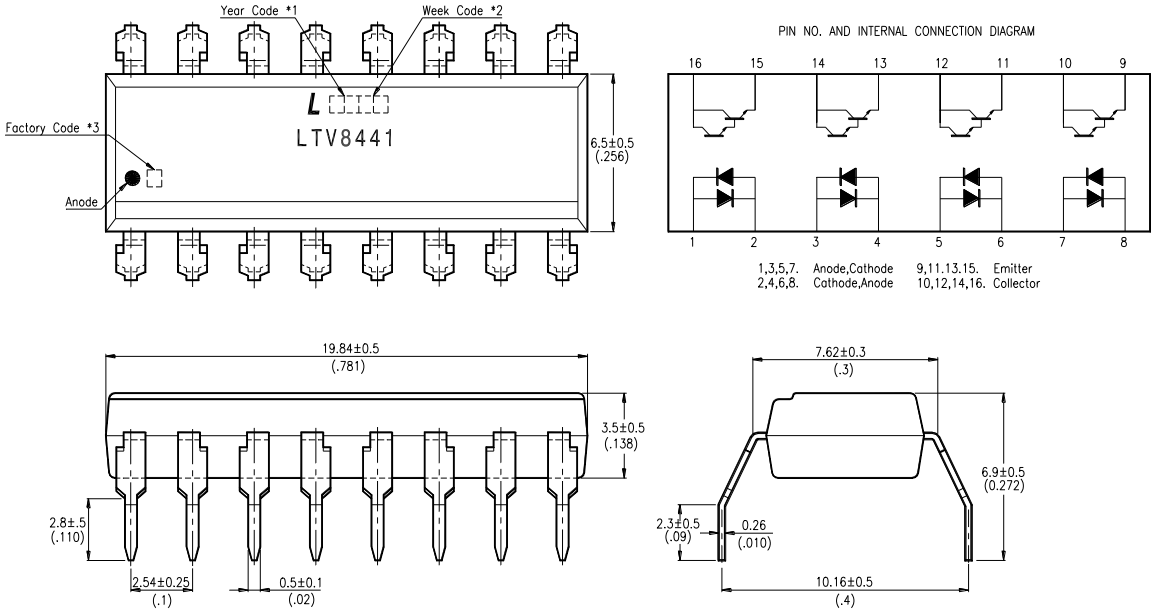

*1. Year date code.
*2. 2-digit work week.
*3. Factory identification mark shall be marked.
(W: China-CZ, X : China-TJ, Y : Thailand)

OUTLINE DIMENSIONS

LTV-8141S :

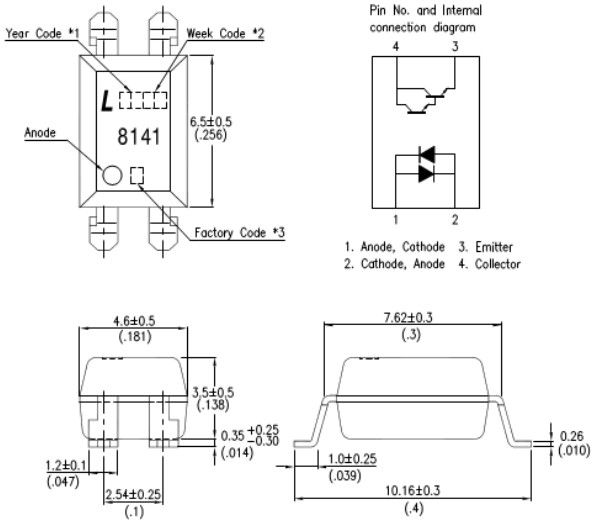

LTV-8241S :

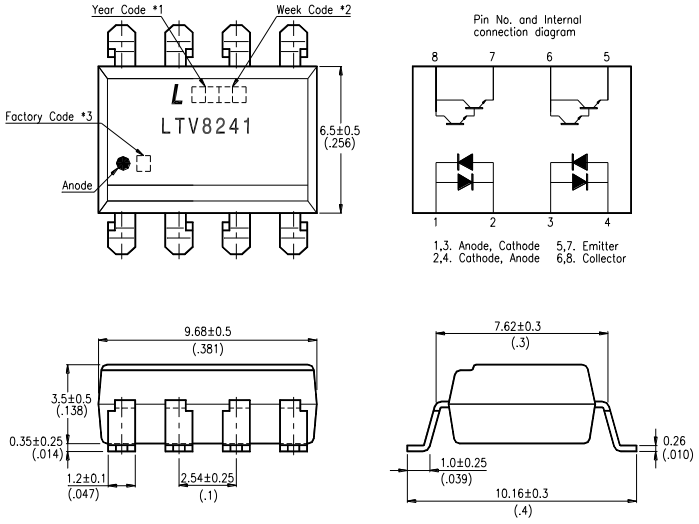

*1. Year date code.
*2. 2-digit work week.
*3. Factory identification mark shall be marked.
(W: China-CZ, X : China-TJ, Y : Thailand)

OUTLINE DIMENSIONS

LTV-8441S :

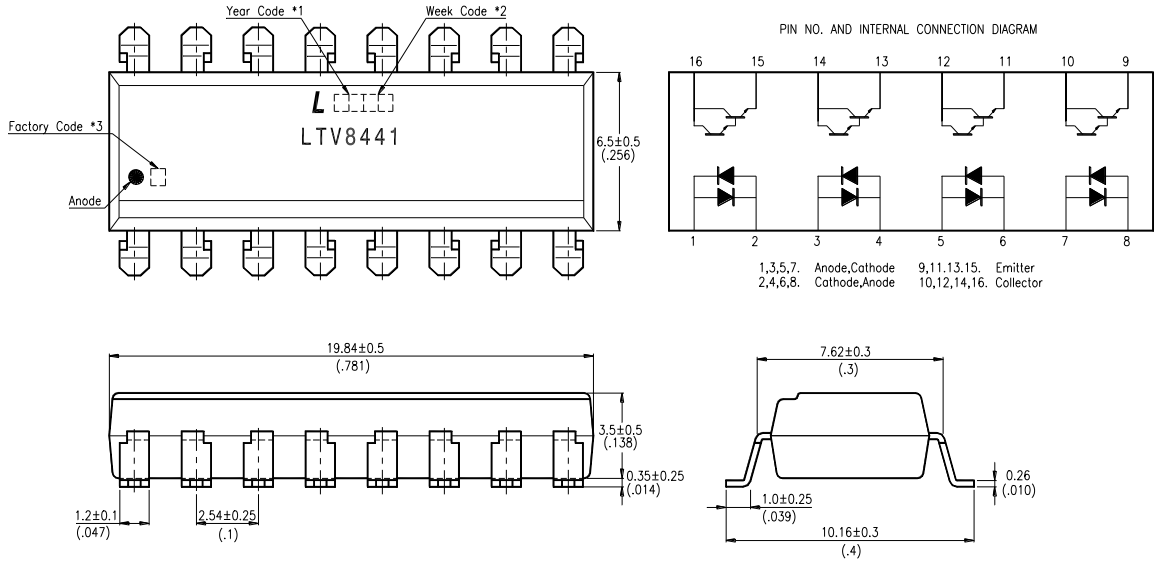

*1. Year date code.
*2. 2-digit work week.
*3. Factory identification mark shall be marked.
(W: China-CZ, X : China-TJ, Y : Thailand)

TAPING DIMENSIONS

LTV-8141S-TA1 :

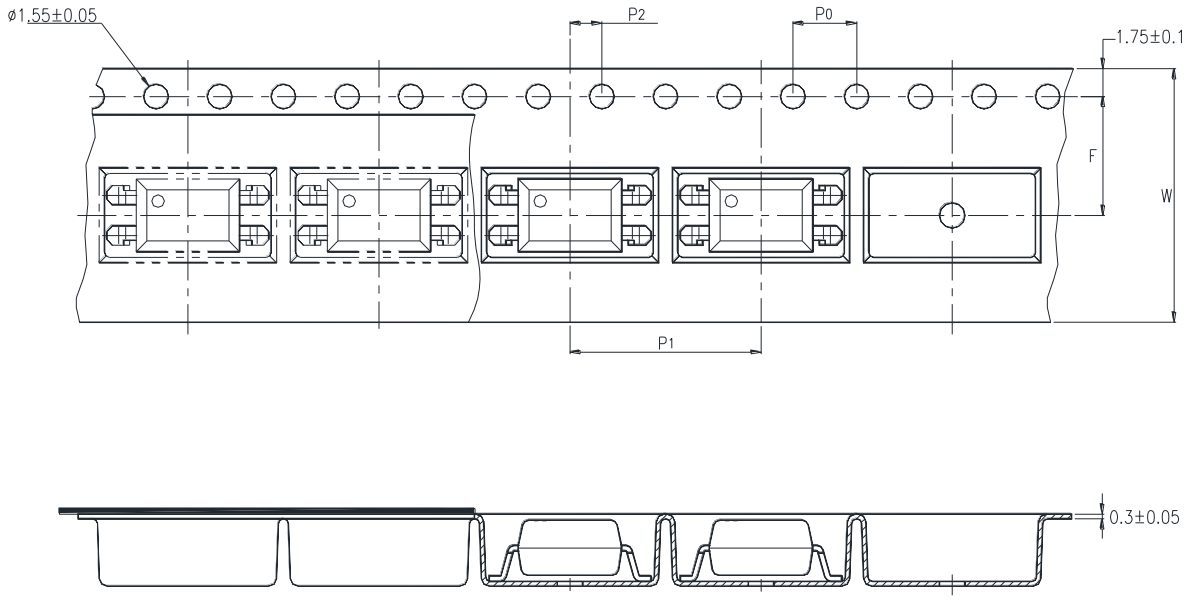

LTV-8241S-TA1 :

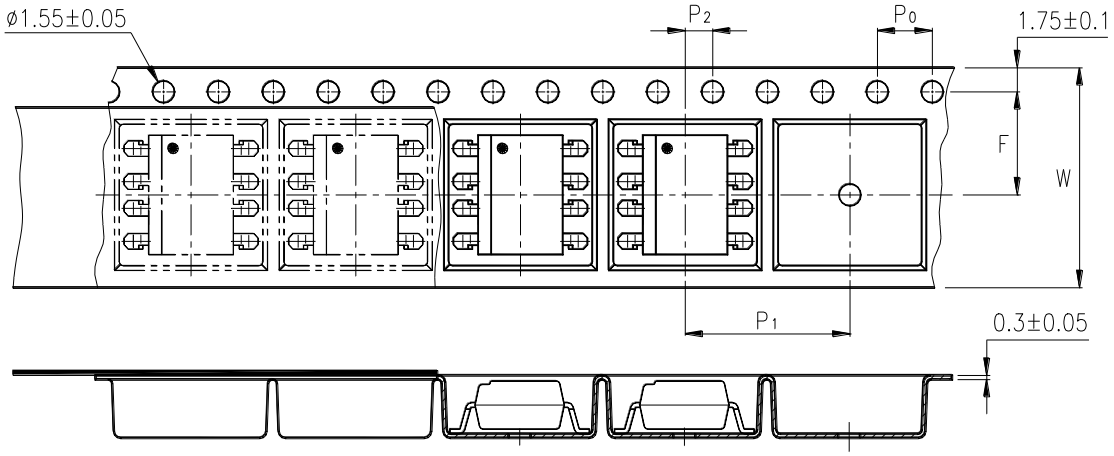

Description	Symbol	Dimensions in mm (inches)
Tape wide	W	16 ± 0.3 (.63)
Pitch of sprocket holes	P_0	4 ± 0.1 (.15)
Distance of compartment	F	7.5 ± 0.1 (.295)
	P_2	2 ± 0.1 (.079)
Distance of compartment to compartment	P_1	12 ± 0.1 (.472)

TAPING DIMENSIONS

LTV-8141S-TA :

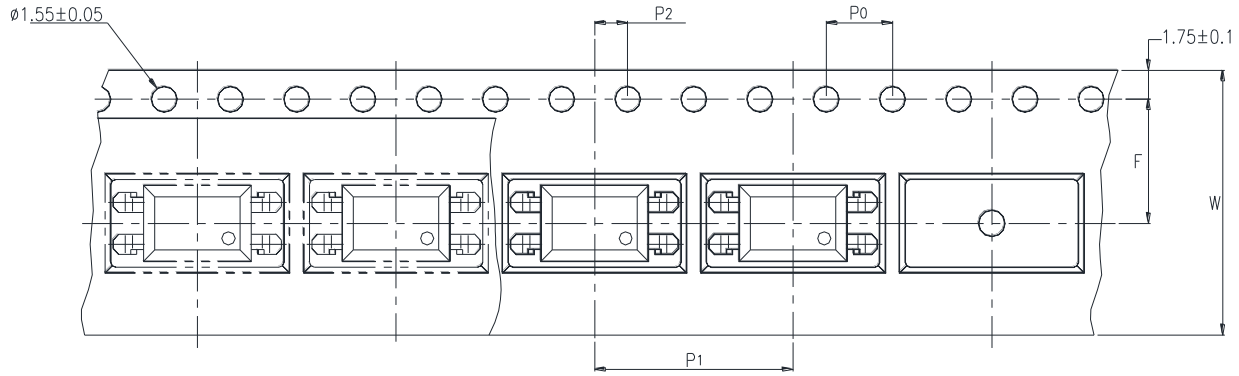

LTV-8141S-TP :

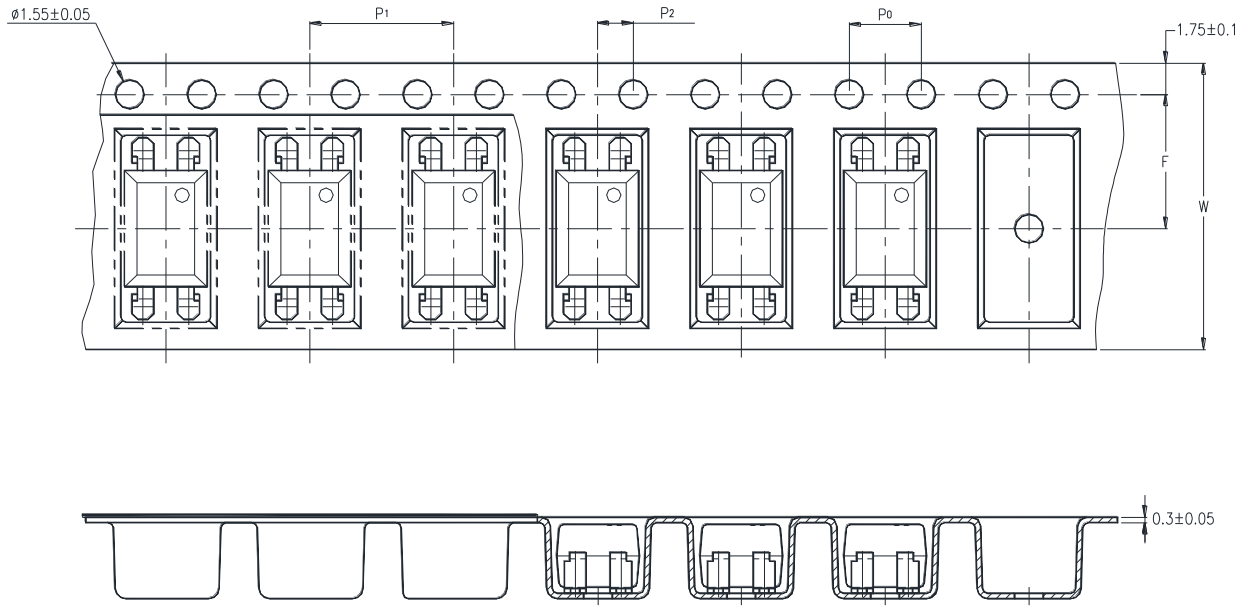

Description	Symbol	Dimensions in mm (inches)
Tape wide	W	16 ± 0.3 (.63)
Pitch of sprocket holes	P_0	4 ± 0.1 (.15)
Distance of compartment	F P_2	7.5 ± 0.1 (.295) 2 ± 0.1 (.079)
Distance of compartment to compartment [Option: **TA**]	P_1	12 ± 0.1 (.472)
Distance of compartment to compartment [Option: **TP**]	P_1	8 ± 0.1 (.315)

ABSOLUTE MAXIMUM RATING

(Ta = 25°C)

PARAMETER		SYMBOL	RATING	UNIT
INPUT	Forward Current	I_F	±50	mA
	Power Dissipation	P	70	mW
OUTPUT	Collector - Emitter Voltage	V_{CEO}	35	V
	Emitter - Collector Voltage	V_{ECO}	6	V
	Collector Current	I_C	80	mA
	Collector Power Dissipation	P_C	150	mW
Total Power Dissipation		P_{tot}	200	mW
*1 Isolation Voltage		V_{iso}	5,000	Vrms
Operating Temperature		T_{opr}	-30 ~ +100	°C
Storage Temperature		T_{stg}	-55 ~ +125	°C
*2 Soldering Temperature		T_{sol}	260	°C

*1. AC For 1 Minute, R.H. = 40 ~ 60%

Isolation voltage shall be measured using the following method.

(1) Short between anode and cathode on the primary side and between collector and emitter on the secondary side.

(2) The isolation voltage tester with zero-cross circuit shall be used.

(3) The waveform of applied voltage shall be a sine wave.

*2. For 10 Seconds

ELECTRICAL - OPTICAL CHARACTERISTICS

(Ta = 25°C)

PARAMETER		SYMBOL	MIN.	TYP.	MAX.	UNIT	CONDITIONS
INPUT	Forward Voltage	V_F	—	1.2	1.4	V	I_F=±20mA
	Terminal Capacitance	C_t	—	50	250	pF	V=0, f=1KHz
OUTPUT	Collector Dark Current	I_{CEO}	—	—	1	μA	V_{CE}=10V, I_F=0
	Collector-Emitter Breakdown Voltage	BV_{CEO}	35	—	—	V	I_C=0.1mA I_F=0
	Emitter-Collector Breakdown Voltage	BV_{ECO}	6	—	—	V	I_E=10μA I_F=0
TRANSFER CHARACTERISTICS	Collector Current	I_C	6	—	75	mA	I_F=±1mA V_{CE}=2V
	* Current Transfer Ratio	CTR	600	—	7,500	%	
	Collector-Emitter Saturation Voltage	$V_{CE(sat)}$	—	0.8	1	V	I_F=±20mA I_C=5mA
	Isolation Resistance	R_{iso}	5×10^{10}	1×10^{11}	—	Ω	DC500V 40 ~ 60% R.H.
	Floating Capacitance	C_f	—	0.6	1	pF	V=0, f=1MHz
	Cut-Off Frequency	f_c	1	6	—	KHz	V_{CE}=5V, I_C=2mA R_L=100Ω, -3dB
	Response Time (Rise)	t_r	—	60	300	μs	V_{CE}=2V, I_C=10mA R_L=100Ω
	Response Time (Fall)	t_f	—	53	250	μs	

* $CTR = \frac{I_C}{I_F} \times 100\%$

CHARACTERISTICS CURVES

Fig.1 Forward Current vs. Ambient Temperature

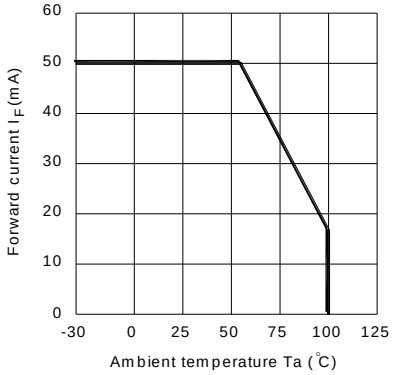

Fig.2 Collector Power Dissipation vs. Ambient Temperature

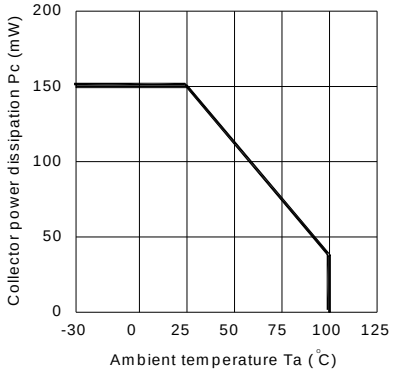

Fig.3 Collector-emitter Saturation Voltage vs. Forward Current

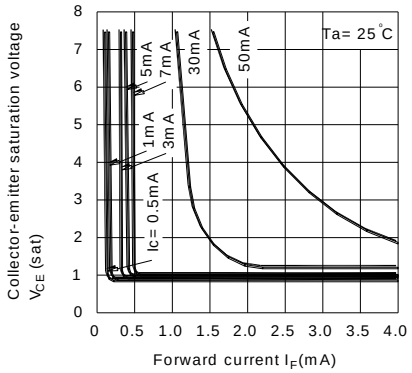

Fig.4 Forward Current vs. Forward Voltage

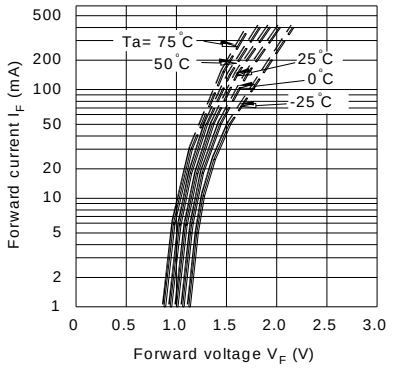

Fig.5 Current Transfer Ratio vs. Forward Current

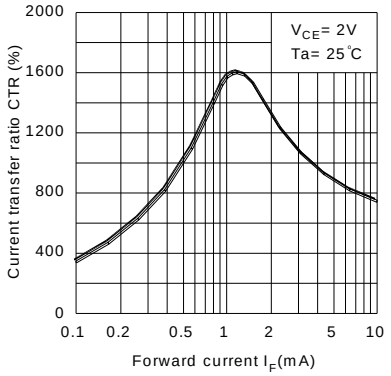

Fig.6 Collector Current vs. Collector-emitter Voltage

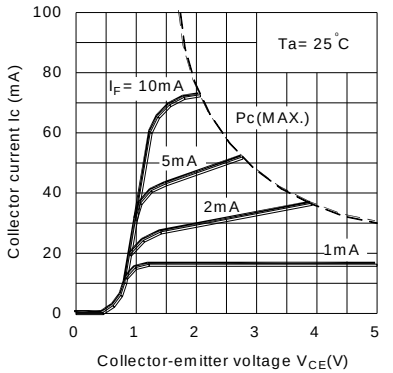

CHARACTERISTICS CURVES

Fig.7 Relative Current Transfer Ratio vs. Ambient Temperature

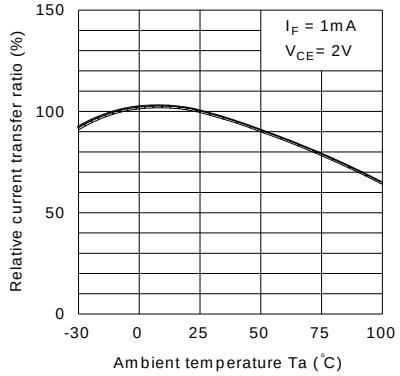

Fig.8 Collector-emitter Saturation Voltage vs. Ambient Temperature

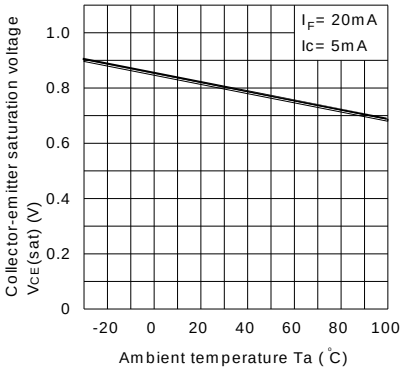

Fig.9 Collector Dark Current vs. Ambient Temperature

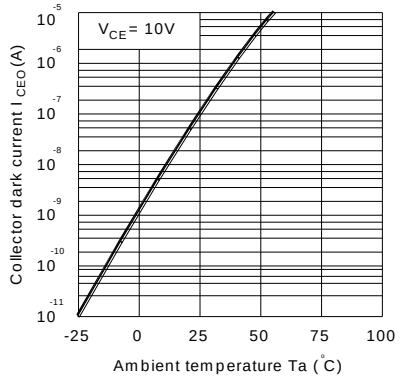

Fig.10 Response Time vs. Load Resistance

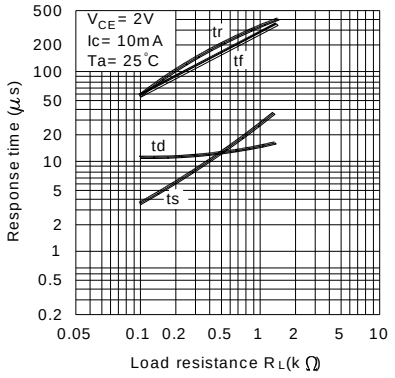

Fig.11 Frequency Response

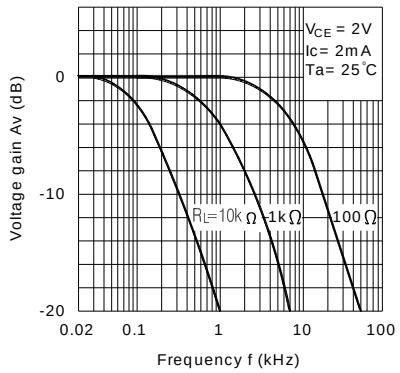

Test Circuit for Response Time

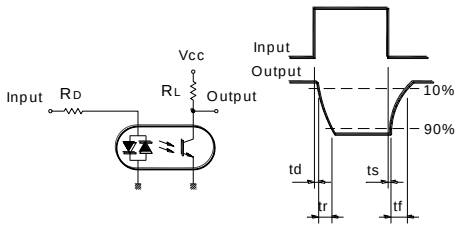

Test Circuit for Frequency Response

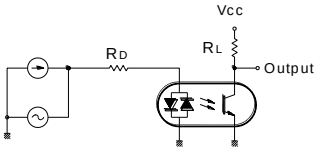

RECOMMENDED FOOT PRINT PATTERNS (MOUNT PAD)

Unit : mm

4 PIN

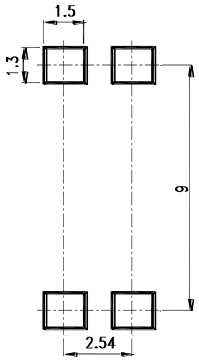

8 PIN

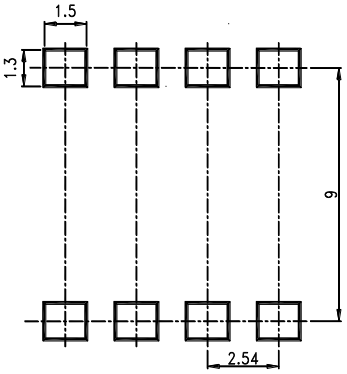

16 PIN

