LITEON®
OPTOELECTRONICS



Specific Lighting Product Data Sheet

LTPL-P033RGB

Spec No. :DS23-2016-0058
Effective Date: 07/18/2017
Revision: A

LITE-ON DCC

RELEASE

BNS-OD-FC001/A4

LITE-ON Technology Corp. / Optoelectronics
No.90,Chien 1 Road, Chung Ho, New Taipei City 23585, Taiwan, R.O.C.
Tel: 886-2-2222-6181 Fax: 886-2-2221-1948 / 886-2-2221-0660
http://www.liteon.com/opto

Specific lighting
LTPL-P033RGB

1. Description

The LTPL (LiteOn Power LED) is a revolutionary, energy efficient and ultra compact new light source, combining the lifetime and reliability advantages of Light Emitting Diodes with the brightness of conventional lighting. It gives you total design freedom and unmatched brightness, creating a new opportunities for solid state lighting to displace conventional lighting technologies.

1.1. Features

- High power LED light source
- Instant light (less than 100 ns)
- Low voltage DC operated
- Low thermal resistance
- RoHS Compliant
- Lead free reflow solder compatible

1.2. Applications

- Reading lights (car, bus, aircraft)
- Portable (flashlight, bicycle)
- Downlighters/Orientation
- Decorative/Entertainment
- Bollards/Security/Garden
- Cove/Undershelf/Task
- Traffic signaling/Beacons/ Rail crossing and Wayside
- Indoor/Outdoor Commercial and Residential Architectural
- Edge_lit signs (Exit, point of sale)

2. Outline Dimensions

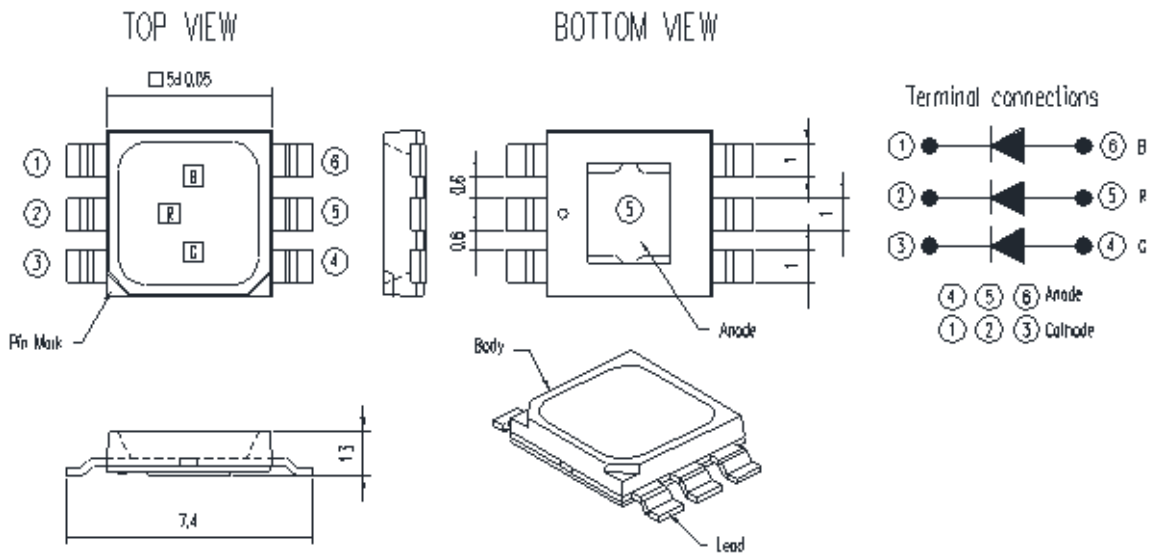

Notes

1. All dimensions are in millimeters.
2. Tolerance is +/- 0.2 mm (.008”) unless otherwise noted.

3. Rating and Characteristics

Absolute Maximum Ratings at Ta=25℃

Parameter	Symbol	Rating			Unit
		Red	Green	Blue	
Forward Current	I_F	150	150	150	mA
Forward Pulse Current	I_{FP}	300	300	300	mA
Power Dissipation	PD	360	540	540	mW
Operating Temperature Range	T_{opr}	-20 - 85			℃
Storage Temperature Range	T_{stg}	-30 - 100			℃
Junction Temperature	T_j	125			℃

Notes

1. 1/10 duty cycle, Pulse width ≤10 μ s.
2. Forbid to operating at reverse voltage condition for long.
3. It is recommended to follow de-rating curve to use maximum rating to ensure LED can be operated normally.

Specific lighting
LTPL-P033RGB

Electro-Optical Characteristics at Ta=25℃

Parameter	Emission color	MIN.	TYP.	MAX.	Test Condition	Unit
Luminous Flux	Red	18	21	27	I_F= 150mA	lm
	Green	35	42	47		
	Blue	6	9	15		
Luminous Intensity (for reference)	Red	5.8	6.8	9.0		cd
	Green	8.8	10.0	12.0		
	Blue	1.8	3.0	5.0		
Dominant Wavelength	Red	--	625	--		nm
	Green	--	525	--		
	Blue	--	460	--		
Forward Voltage	Red	1.5	--	2.6		V
	Green	2.8	--	3.8		
	Blue	2.8	--	3.8		
Viewing Angle	Red	--	120	--		deg
	Green					
	Blue					

Notes

1. Luminous flux is the total luminous flux output as measured with an integrating sphere.
2. Luminous Flux classification code is marked on each packing bag.
3. CAS-140B is the test standard for luminous flux & Dominant Wavelength & Voltage.

Typical Electrical / Optical Characteristics Curves

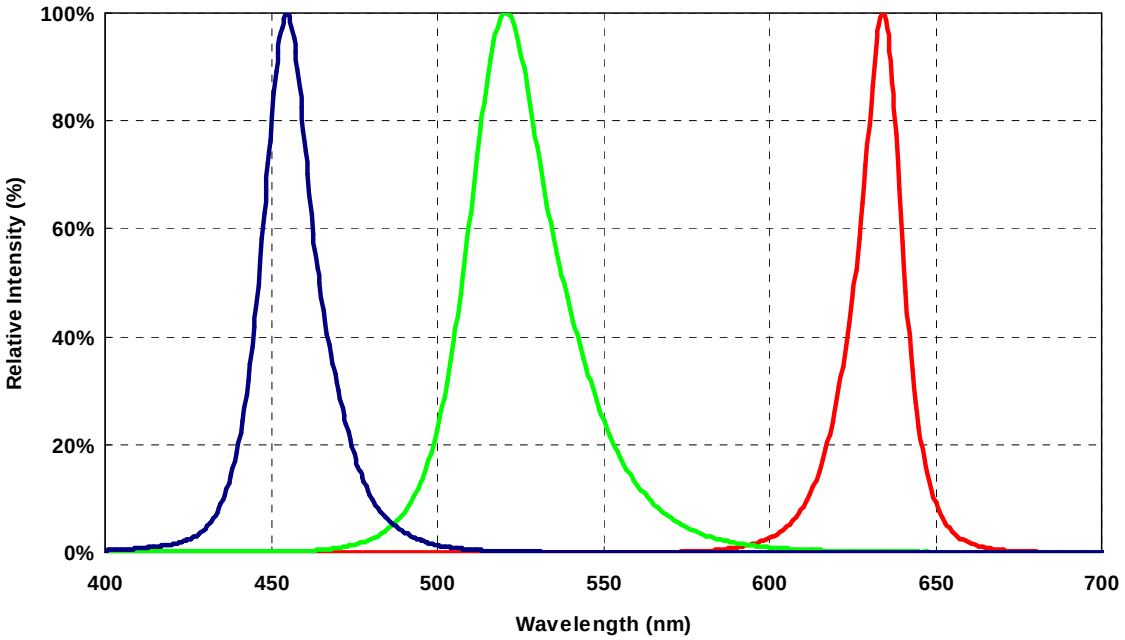

Fig 1. Relative Spectrum of Emission

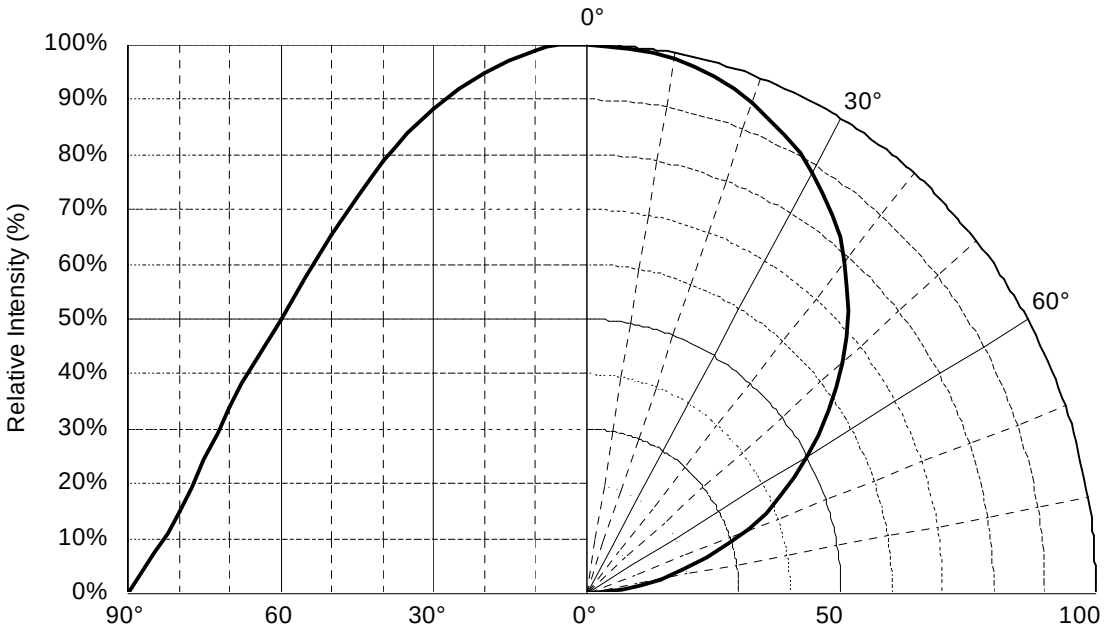

Fig 2. Radiation Characteristics

Specific lighting
LTPL-P033RGB

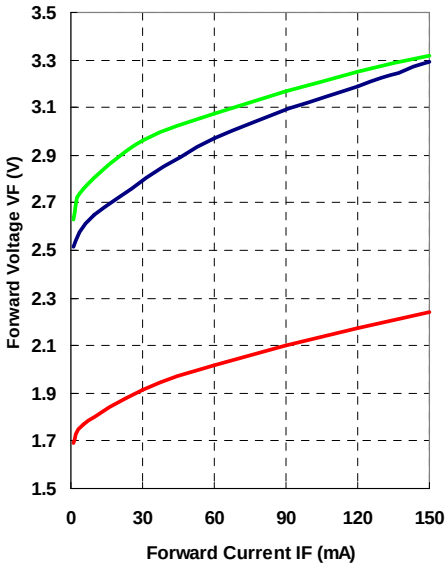

Fig 3. Forward Current vs. Voltage

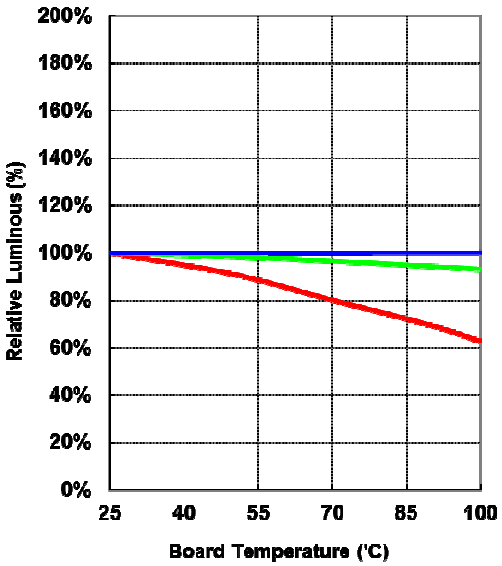

Fig 5. Board Temperature vs. Relative Luminous Flux

Note:

1.This Is based on over 80% soldering coverage.
2.Not recommend driving over 85'C.

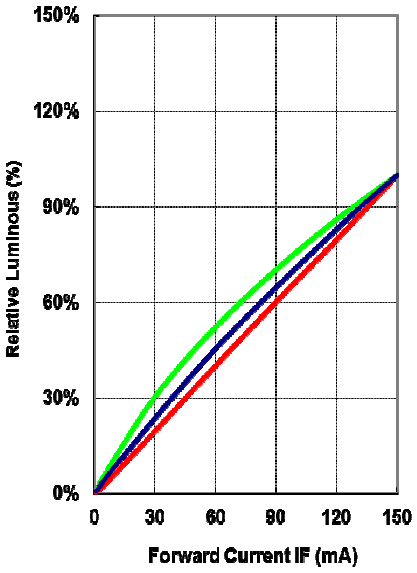

Fig 4. Forward Current vs. Relative Luminous Flux

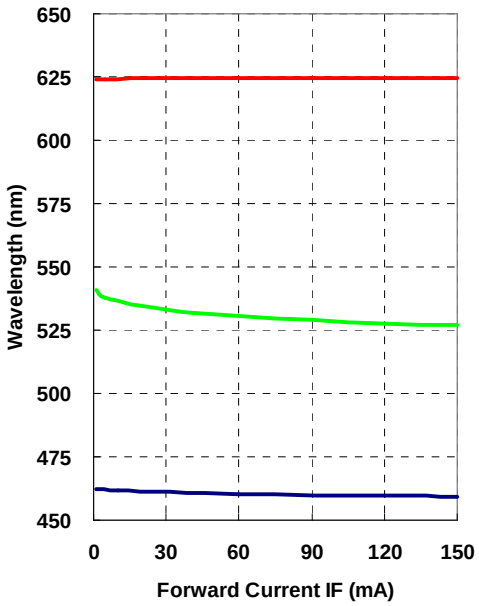

Fig 6. Forward Current vs. Dominant Wavelength

4. Category Code Table

Red	Luminous Flux Spec. Table	
Bin	Lumen (lm) at I_F = 150 mA	
	Min	Max
R1	18	21
R2	21	24
R3	24	27

Green	Luminous Flux Spec. Table	
Bin	Lumen (lm) at I_F = 150 mA	
	Min	Max
G1	35	39
G2	39	43
G3	43	47

Blue	Luminous Flux Spec. Table	
Bin	Lumen (lm) at I_F = 150 mA	
	Min	Max
B1	6	9
B2	9	12
B3	12	15

Tolerance on each Luminous Flux bin is +/- 10%.

5. Reflow Soldering Characteristics

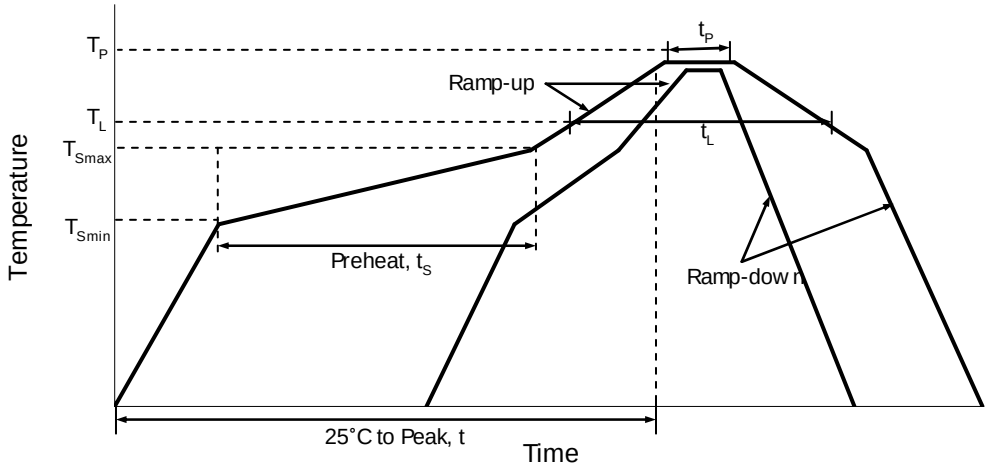

Profile Feature	Lead Free Assembly
Average Ramp-Up Rate (T_{Smax} to T_P)	3℃ / second max
Preheat Temperature Min (T_{Smin})	150℃
Preheat Temperature Max (T_{Smax})	200℃
Preheat Time (t_{Smin} to t_{Smax})	60 – 180 seconds
Time Maintained Above Temperature (T_L)	217℃
Time Maintained Above Time (t_L)	60 – 150 seconds
Peak / Classification Temperature (T_P)	260℃
Time Within 5℃ of Actual Peak Temperature (t_P)	5 seconds
Ramp – Down Rate	6℃ / second max
Time 25℃ to Peak Temperature	8 minutes max

Notes:

1. The LEDs can be soldered using the reflow soldering or hand soldering method. The recommended hand soldering condition is 350℃ max. and 2secs max. for one time only.
2. All temperatures refer to topside of the package, measured on the package body surface.
3. The soldering profile could be further referred to different soldering grease material characteristic. The grease vendor will provide this information.
4. A rapid-rate process is not recommended for the LEDs cooling down from the peak temperature.
5. Although the recommended reflow conditions are specified above, the reflow or hand soldering condition at the lowest possible temperature is desirable for the LEDs.
6. LiteOn cannot make a guarantee on the LEDs which have been already assembled using the dip soldering method.

6. Recommend Solder Pad

Solder Pad Design

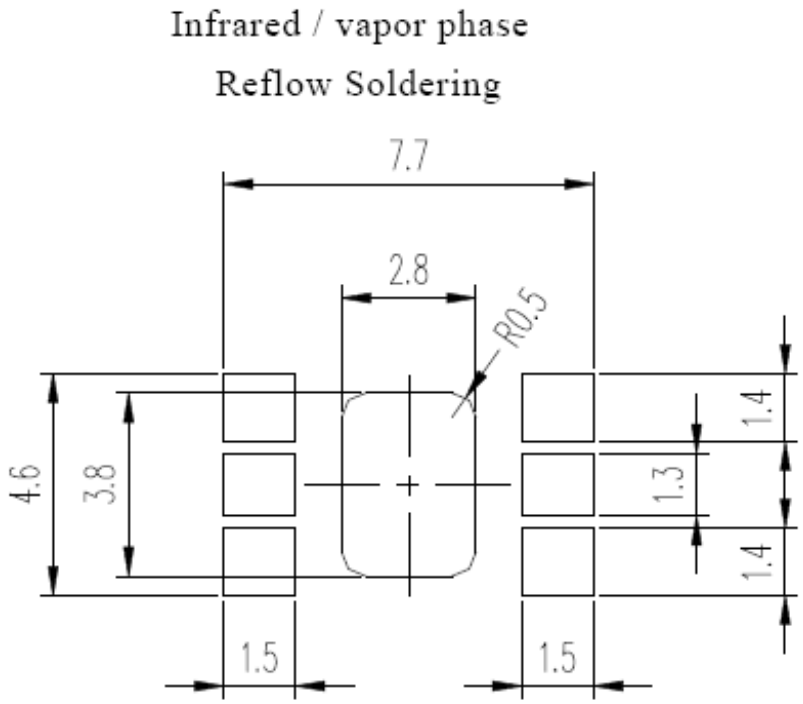

Notes:

1. All dimensions are in millimeters
2. The circle metallization board and lead contact pad is electrically isolated.

7. Package Dimensions of Tape and Reel

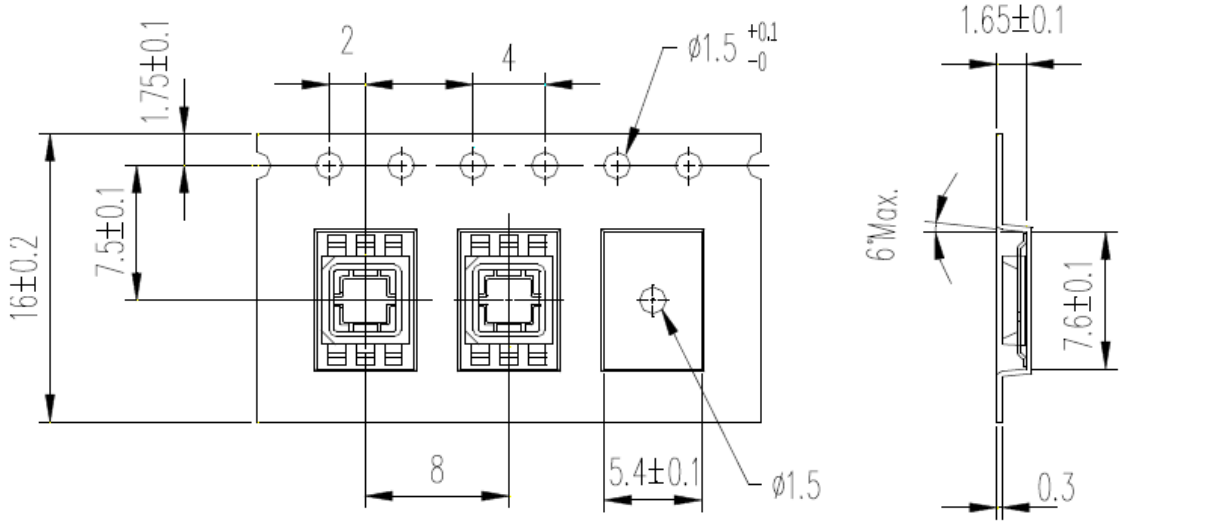

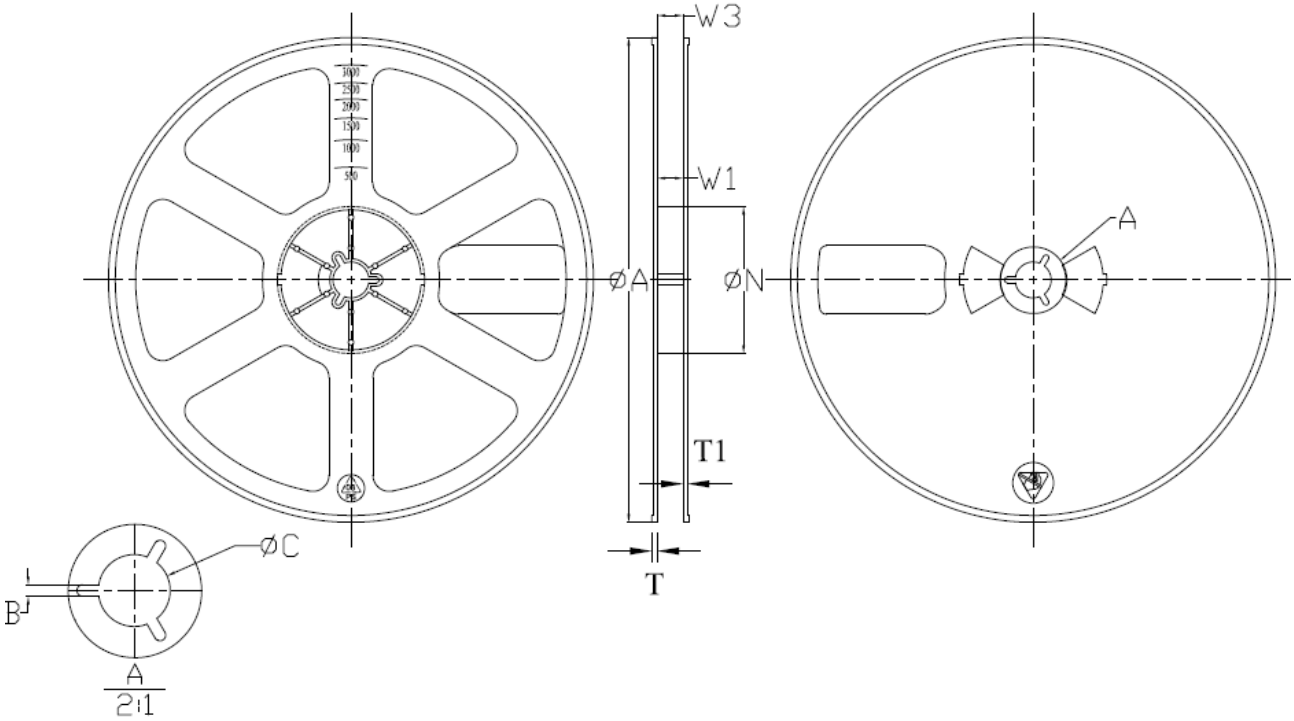

PRODUCT SPECIFICATIONS								
TAPE WIDTH	øA±1.0	øN±0.5	W1±0.5	W3 MAX	øC +0.3 −0.2	B +0.5 −0.5	T±0.2	T1±0.2
DPR-131-B*	178	60	17.0	19.5	13.2	2.2	1.6	1.20

Notes:

1. All dimension are in millimeters. (inches)
2. Empty component pockets sealed with top cover tape.
3. 1000 pieces per 7 inch real. (Min. packing quantities are 500 pieces for remainders)
4. The maximum number of consecutive missing LED is two.
5. In accordance with EIA-481-1-L23 specifications.

8. Reliability Test

Test Item	Test Condition	Test Point	Number of Damaged
High Temperature Operating Life	T_a=55ºC, I_F = 100mA(DC)	1000 Hours	0/22
Room Temperature Operating Life	T_a=25ºC, I_F = 150mA(DC)	1000 Hours	0/22
Low Temperature Operating Life	T_a=-40ºC, I_F = 150mA(DC)	1000 Hours	0/22
High Temperature Storage Life	T_a=105℃	500 Hours	0/22
Low Temperature Storage Life	T_a=-40℃	1000 Hours	0/22
Wet High Temperature Storage Life	T_a=85℃/85%RH	500 Hours	0/22
Thermal Cycle	T_a=- 40℃~100℃ 30min dwell, 5 min transfer	100 cycle	0/22
Thermal Shock	T_a=- 40℃~100℃ 20min dwell, 20 sec transfer	100 cycle	0/22

Criteria for Judging the Damage

Item	Symbol	Test Condition	Criteria for Judgment	
			Min.	Max.
Forward Voltage	Vf	I_F = 150mA	----	Initial Value. x 1.1
Luminous Intensity	Lm	I_F = 150mA	Initial Value. x 0.7	----

9. Cautions

Application

The LEDs described here are intended to be used for ordinary electronic equipment (such as office equipment, communication equipment and household applications).Consult Liteon's Sales in advance for information on applications in which exceptional reliability is required, particularly when the failure or malfunction of the LEDs may directly jeopardize life or health (such as in aviation, transportation, traffic control equipment, medical and life support systems and safety devices).

Storage

This product is qualified as Moisture Sensitive Level 4 per JEDEC J-STD-020 Precaution when handing this moisture sensitive product is important to ensure the reliability of the product.

The package is sealed:

The LEDs should be stored at 30°C or less and 90%RH or less. And the LEDs are limited to use within one year, while the LEDs is packed in moisture-proof package with the desiccants inside.

The package is opened:

The LEDs should be stored at 30°C or less and 60%RH or less. Moreover, the LEDs are limited to solder process within 72hrs. If the LEDs were unpacked more than 72hrs, we recommend baking the LEDs at 60℃ at least 48 hours before soldering process.

If the Humidity Indicator shows the pink color in 10% even higher or exceed the storage limiting time since opened, that we recommended to be with workable desiccants in original package.

Drive Method

An LED is a current-operated device. In order to ensure intensity uniformity on multiple LEDs connected in parallel in an application, it is recommended that a current limiting resistor be incorporated in the drive circuit, in series with each LED as shown in Circuit A below.

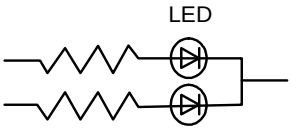

Circuit model A

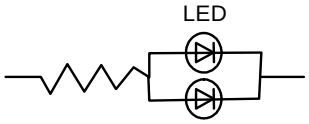

Circuit model B

(A) Recommended circuit.

(B) The brightness of each LED might appear different due to the differences in the I-V characteristics of those LEDs.

ESD (Electrostatic Discharge)

Static Electricity or power surge will damage the LED. Suggestions to prevent ESD damage:

- Use a conductive wrist band or anti-electrostatic glove when handling these LEDs.
- All devices, equipment, and machinery must be properly grounded.
- Work tables, storage racks, etc. should be properly grounded.
- Use ion blower to neutralize the static charge which might have built up on surface of the LED's plastic lens as a result of friction between LEDs during storage and handling.

ESD-damaged LEDs will exhibit abnormal characteristics such as high reverse leakage current, low forward voltage, or "no light up" at low currents. To verify for ESD damage, check for "light up" and V_F of the suspect LEDs at low currents. The V_F of "good" LEDs should be >2.0V@0.1mA for InGaN product.

Suggested Checking List

Static-Safe Workstation & Work Areas

1. Static-safe working stations or work-areas have ESD signs.
2. All surfaces and objects at all static-safe workstation and within 1 ft measure less than 100V.
3. All ionizer activated, positioned towards the units.
4. Each work surface mats grounding is good.

Personnel Grounding

1. Every person (including visitors) handling ESD sensitive (ESDS) items wear wrist strap, heel strap or conductive shoes with conductive flooring.
2. If conductive footwear used, conductive flooring also present.
3. Garments, hairs or anything closer than 1 ft to ESD items measure less than 100V.
4. The wrist strap or heel strap/conductive shoes are checked daily and result recorded.
5. All wrist strap or heel strap checkers calibration up to date.

Device Handling

1. Each ESDS items identified by EIA-471 labels on item or packaging..
2. No static charge generators (e.g. plastics) inside shielding containers with ESDS items.
3. All flexible conductive and dissipative package materials are inspected before reuse or recycles