AUMOV® Series
Radial Leaded Varistors

AUTOMOTIVE GRADE RoHS HF

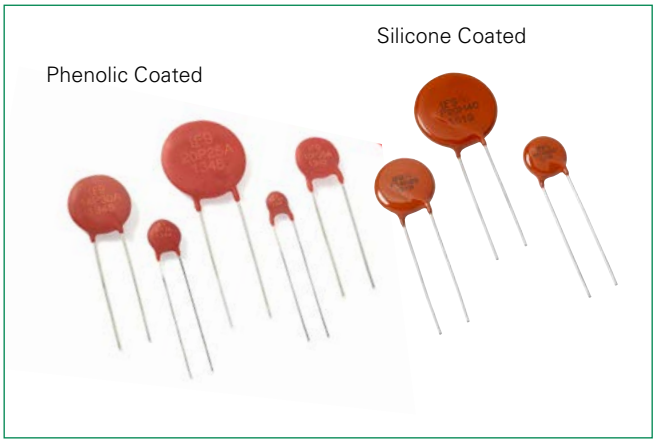

Description

The AUMOV® Varistor Series is designed for automotive applications requiring load dump, jump start and surge voltage transient protection.

Features & Benefits

- Phenolic and Silicone coating meet the stringent quality requirements of AEC-Q200 (Table 10)
- High peak surge current rating up to 10kA (8/20 µs pulse)
- Wide operating voltage range: 14VAC to 625VAC and 16VDC to 825VDC
- Five disc sizes available: 5, 7, 10, 14, and 20mm
- High energy absorption particularly for automotive load dump and jump start
- Lead–free, Halogen-Free and RoHS compliant

Applications

- Body Electronics Systems
- Powertrain Systems
- Electric Cars On-Board-Charger.
- Automotive Control Module Protection
- Motor or inductive load transient suppression

Web Resources

Download ECAD models, order samples, and find technical recources at www.littelfuse.com

Agency Approvals

Agency	Agency File Number
	E320116 (14Vac to 42Vac: Epoxy coated parts. 130Vac to 625Vac: both Silicone and Phenolic coated 10mm, 14mm and 20mm parts.)

Absolute Maximum Ratings

For ratings of individual members of a series, see Device Ratings and Specifications chart

	Low Voltage Series	Units
Continous:		
Steady State Applied Voltage:		
AC Voltage Range ($V_{M(AC)RMS}$)	14 to 625	V
DC Voltage Range ($V_{M(DC)}$)	16 to 825	V
Transient:		
Non-Repetitive Surge Current, 8/20µs Waveform (I_{TM})	400 to 10,000	A
Non-Repetitive Energy Capability, 2ms Waveform (W_{TM})	1.0 to 140	J
Operating Ambient Temperature Range (T_A) for Epoxy coated	-40 to +85	°C
Operating Ambient Temperature Range (T_A) for Phenolic coated and Silicone coated	-40 to +125	°C
Storage Temperature Range (T_{STG}) for Epoxy coated	-40 to +125	°C
Storage Temperature Range (T_{STG}) for Phenolic coated and Silicone coated	-40 to +150	°C
Temperature Coefficient (αV) of Clamping Voltage (V_C) at Specified Test Current	< 0.01%	°C
Hi-Pot Encapsulation (Isolation Voltage Capability) for Epoxy coated	2500	Vac
Hi-Pot Encapsulation (Isolation Voltage Capability) for Phenolic coated	500	Vac
Hi-Pot Encapsulation (Isolation Voltage Capability) for Silicone coated	2500	Vac
Temperature Cycling (-40C to +125C) for Epoxy coated	5	Cycles
Temperature Cycling (-40C to +125C) for Phenolic and Silicone coated	1000	Cycles

Caution: Stresses above those listed in "Absolute Maximum Ratings" may cause permanent damage to the device. This is a stress only rating and operation of the device at these or any other conditions above those indicated in the operational sections of this specification is not implied.

© 2024 Littelfuse, Inc.
Specifications are subject to change without notice.
Revised: GD. 04/17/24

AUMOV® Series
Radial Leaded Varistors

AUMOV® Varistor Series Device Ratings & Specifications

Phenolic Coated Models		Silicone Coated Models		Size Disc Dia. (mm)	Max Continuous Voltage		Varistor Voltage at 1mA			Maximum Clamping Voltage		Max Peak Current (8 x 20µs 1 pulse)	Energy Rating (2ms, 1 pulse)	Energy (Load Dump, 10 pulses)*	Jump Start DC V_{jump} (5 min)	Typical Capacitance f = 1MHz
Part Number (Base part)	Branding	Part Number (Base part)	Branding		V_{RMS}	V_{DC}	Min	Nom	Max	V_C	I_{PK}	I_{TM}	W_{TM}			
					(V)	(V)	(V)	(V)	(V)	(V)	(A)	(A)	(J)	(J)	(V)	(pF)
V05P14AUTO	5P14A	-	-	5	14	16	19.8	22	24.2	43	1	400	1	6	25	1100
V07P14AUTO	7P14A	-	-	7	14	16	19.8	22	24.2	43	2.5	800	2.2	12	25	2450
V10P14AUTO	10P14A	V10H14AUTO	10H14A	10	14	16	19.8	22	24.2	43	5	1500	5	25	25	4650
V14P14AUTO	14P14A	V14H14AUTO	14H14A	14	14	16	19.8	22	24.2	43	10	3000	10	50	25	10200
V20P14AUTO	20P14A	V20H14AUTO	20H14A	20	14	16	19.8	22	24.2	43	20	5000	28	100	25	22200
V05P17AUTO	5P17A	-	-	5	17	20	24.3	27	29.7	53	1	400	1.4	6	30	950
V07P17AUTO	7P17A	-	-	7	17	20	24.3	27	29.7	53	2.5	800	2.8	12	30	2100
V10P17AUTO	10P17A	V10H17AUTO	10H17A	10	17	20	24.3	27	29.7	53	5	1500	6.5	25	30	3900
V14P17AUTO	14P17A	V14H17AUTO	14H17A	14	17	20	24.3	27	29.7	53	10	3000	13	50	30	8700
V20P17AUTO	20P17A	V20H17AUTO	20H17A	20	17	20	24.3	27	29.7	53	20	5000	35	100	30	18750
V05P20AUTO	5P20A	-	-	5	20	26	29.7	33	36.3	65	1	400	2	6	35	790
V07P20AUTO	7P20A	-	-	7	20	26	29.7	33	36.3	65	2.5	800	4.2	12	35	1620
V10P20AUTO	10P20A	V10H20AUTO	10H20A	10	20	26	29.7	33	36.3	65	5	1500	10	25	35	3495
V14P20AUTO	14P20A	V14H20AUTO	14H20A	14	20	26	29.7	33	36.3	65	10	3000	20	50	35	9290
V20P20AUTO	20P20A	V20H20AUTO	20H20A	20	20	26	29.7	33	36.3	65	20	5000	58	100	35	13000
V05P23AUTO	5P23A	-	-	5	23	28	32.4	36	39.6	71	1	400	2.2	6	38	720
V07P23AUTO	7P23A	-	-	7	23	28	32.4	36	39.6	71	2.5	800	5	12	38	1500
V10P23AUTO	10P23A	V10H23AUTO	10H23A	10	23	28	32.4	36	39.6	71	5	1500	12	25	38	3300
V14P23AUTO	14P23A	V14H23AUTO	14H23A	14	23	28	32.4	36	39.6	71	10	3000	23	50	38	8000
V20P23AUTO	20P23A	V20H23AUTO	20H23A	20	23	28	32.4	36	39.6	71	20	5000	70	100	38	12500
V05P25AUTO	5P25A	-	-	5	25	28	35.1	39	42.9	77	1	400	2.5	6	40	750
V07P25AUTO	7P25A	-	-	7	25	28	35.1	39	42.9	77	2.5	800	5.5	12	40	1500
V10P25AUTO	10P25A	V10H25AUTO	10H25A	10	25	28	35.1	39	42.9	77	5	1500	13	25	40	2900
V14P25AUTO	14P25A	V14H25AUTO	14H25A	14	25	28	35.1	39	42.9	77	10	3000	25	50	40	6200
V20P25AUTO	20P25A	V20H25AUTO	20H25A	20	25	28	35.1	39	42.9	77	20	5000	77	100	40	13500
V05P30AUTO	5P30A	-	-	5	30	34	42.3	47	51.7	93	1	400	3.1	6	45	650
V07P30AUTO	7P30A	-	-	7	30	34	42.3	47	51.7	93	2.5	800	7	12	45	1350
V10P30AUTO	10P30A	V10H30AUTO	10H30A	10	30	34	42.3	47	51.7	93	5	1500	15.5	25	45	2550
V14P30AUTO	14P30A	V14H30AUTO	14H30A	14	30	34	42.3	47	51.7	93	10	3000	32	50	45	5550
V20P30AUTO	20P30A	V20H30AUTO	20H30A	20	30	34	42.3	47	51.7	93	20	5000	90	100	45	12000
V05P35AUTO	5P35A	-	-	5	35	45	50.4	56	61.6	110	1	400	4	6	50	500
V07P35AUTO	7P35A	-	-	7	35	45	50.4	56	61.6	110	2.5	800	9	12	50	1100
V10P35AUTO	10P35A	V10H35AUTO	10H35A	10	35	45	50.4	56	61.6	110	5	1500	20	25	50	2100
V14P35AUTO	14P35A	V14H35AUTO	14H35A	14	35	45	50.4	56	61.6	110	10	3000	40	50	50	5000
V20P35AUTO	20P35A	V20H35AUTO	20H35A	20	35	45	50.4	56	61.6	110	20	5000	115	100	50	10000
V05P42AUTO	5P42A	-	-	5	42	50	61.2	68	74.8	135	1	400	5	6	55	500
V07P42AUTO	7P42A	-	-	7	42	50	61.2	68	74.8	135	2.5	800	11	12	55	1000
V10P42AUTO	10P42A	V10H42AUTO	10H42A	10	42	50	61.2	68	74.8	135	5	1500	25	25	55	1850
V14P42AUTO	14P42A	V14H42AUTO	14H42A	14	42	50	61.2	68	74.8	135	10	3000	50	50	55	4000
V20P42AUTO	20P42A	V20H42AUTO	20H42A	20	42	50	61.2	68	74.8	135	20	5000	140	100	55	8500
V05P50AUTO	5P50A	-	-	5	50	65	73.8	82	90.2	135	5	400	2	-	-	350
V07P50AUTO	7P50A	-	-	7	50	65	73.8	82	90.2	135	10	1200	4	-	-	800
V10P50AUTO	10P50A	V10H50AUTO	10H50A	10	50	65	73.8	82	90.2	135	25	2500	8	-	-	1400
V14P50AUTO	14P50A	V14H50AUTO	14H50A	14	50	65	73.8	82	90.2	145	50	4500	15	-	-	3000
V20P50AUTO	20P50A	V20H50AUTO	20H50A	20	50	65	73.8	82	90.2	145	100	6500	25	-	-	6000
V05P60AUTO	5P60A	-	-	5	60	85	90	100	110	165	5	400	2.5	-	-	310
V07P60AUTO	7P60A	-	-	7	60	85	90	100	110	165	10	1200	5	-	-	700
V10P60AUTO	10P60A	V10H60AUTO	10H60A	10	60	85	90	100	110	165	25	2500	10	-	-	1200
V14P60AUTO	14P60A	V14H60AUTO	14H60A	14	60	85	90	100	110	175	50	4500	20	-	-	2500
V20P60AUTO	20P60A	V20H60AUTO	20H60A	20	60	85	90	100	110	175	100	6500	30	-	-	5200

© 2024 Littelfuse, Inc.
Specifications are subject to change without notice.
Revised: GD. 04/17/24

AUMOV® Series
Radial Leaded Varistors

AUMOV® Varistor Series Device Ratings & Specifications cont...

Phenolic Coated Models		Silicone Coated Models		Size Disc Dia. (mm)	Max Continuous Voltage		Varistor Voltage at 1mA			Maximum Clamping Voltage		Max Peak Current (8 x 20µs 1 pulse)	Energy Rating (2ms, 1 pulse)	Energy (Load Dump, 10 pulses)*	Jump Start DC V_{jump} (5 min)	Typical Capacitance f = 1MHz
Part Number (Base part)	Branding	Part Number (Base part)	Branding		V_{RMS}	V_{DC}	Min	Nom	Max	V_C	I_{PK}	I_{TM}	W_{TM}			
					(V)	(V)	(V)	(V)	(V)	(V)	(A)	(A)	(J)	(J)	(V)	(pF)
V05P75AUTO	5P75A	-	-	5	75	100	108	120	132	205	5	400	3	-	-	260
V07P75AUTO	7P75A	-	-	7	75	100	108	120	132	205	10	1200	6	-	-	600
V10P75AUTO	10P75A	V10H75AUTO	10H75A	10	75	100	108	120	132	200	25	2500	12	-	-	1100
V14P75AUTO	14P75A	V14H75AUTO	14H75A	14	75	100	108	120	132	210	50	4500	22	-	-	2300
V20P75AUTO	20P75A	V20H75AUTO	20H75A	20	75	100	108	120	132	210	100	6500	33	-	-	4800
V05P95AUTO	5P95A	-	-	5	95	125	135	150	165	250	5	400	4	-	-	200
V07P95AUTO	7P95A	-	-	7	95	125	135	150	165	250	10	1200	8	-	-	520
V10P95AUTO	10P95A	V10H95AUTO	10H95A	10	95	125	135	150	165	250	25	2500	15	-	-	800
V14P95AUTO	14P95A	V14H95AUTO	14H95A	14	95	125	135	150	165	250	50	4500	22	-	-	1700
V20P95AUTO	20P95A	V20H95AUTO	20H95A	20	95	125	135	150	165	250	100	6500	45	-	-	3700
V10P130AUTO	10P130A	V10H130AUTO	10H130A	10	130	170	184.5	205	225.5	340	25	3500	40	-	-	450
V14P130AUTO	14P130A	V14H130AUTO	14H130A	14	130	170	184.5	205	225.5	340	50	6500	60	-	-	1000
V20P130AUTO	20P130A	V20H130AUTO	20H130A	20	130	170	184.5	205	225.5	340	100	10000	145	-	-	1900
V10P140AUTO	10P140A	V10H140AUTO	10H140A	10	140	180	198	220	242	360	25	3500	45	-	-	400
V14P140AUTO	14P140A	V14H140AUTO	14H140A	14	140	180	198	220	242	360	50	6500	65	-	-	900
V20P140AUTO	20P140A	V20H140AUTO	20H140A	20	140	180	198	220	242	360	100	10000	155	-	-	1750
V10P150AUTO	10P150A	V10H150AUTO	10H150A	10	150	200	216	240	264	395	25	3500	50	-	-	360
V14P150AUTO	14P150A	V14H150AUTO	14H150A	14	150	200	216	240	264	395	50	6500	70	-	-	800
V20P150AUTO	20P150A	V20H150AUTO	20H150A	20	150	200	216	240	264	395	100	10000	165	-	-	1600
V10P175AUTO	10P175A	V10H175AUTO	10H175A	10	175	225	243	270	297	455	25	3500	55	-	-	350
V14P175AUTO	14P175A	V14H175AUTO	14H175A	14	175	225	243	270	297	455	50	6500	80	-	-	700
V20P175AUTO	20P175A	V20H175AUTO	20H175A	20	175	225	243	270	297	455	100	10000	180	-	-	1400
V10P230AUTO	10P230A	V10H230AUTO	10H230A	10	230	300	324	360	396	595	25	3500	60	-	-	250
V14P230AUTO	14P230A	V14H230AUTO	14H230A	14	230	300	324	360	396	595	50	6500	105	-	-	550
V20P230AUTO	20P230A	V20H230AUTO	20H230A	20	230	300	324	360	396	595	100	10000	225	-	-	1100
V10P250AUTO	10P250A	V10H250AUTO	10H250A	10	250	320	351	390	429	650	25	3500	65	-	-	220
V14P250AUTO	14P250A	V14H250AUTO	14H250A	14	250	320	351	390	429	650	50	6500	115	-	-	500
V20P250AUTO	20P250A	V20H250AUTO	20H250A	20	250	320	351	390	429	650	100	10000	240	-	-	1000
V10P275AUTO	10P275A	V10H275AUTO	10H275A	10	275	350	387	430	473	710	25	3500	70	-	-	200
V14P275AUTO	14P275A	V14H275AUTO	14H275A	14	275	350	387	430	473	710	50	6500	130	-	-	450
V20P275AUTO	20P275A	V20H275AUTO	20H275A	20	275	350	387	430	473	710	100	10000	260	-	-	900
V10P300AUTO	10P300A	V10H300AUTO	10H300A	10	300	385	423	470	517	775	25	3500	75	-	-	180
V14P300AUTO	14P300A	V14H300AUTO	14H300A	14	300	385	423	470	517	775	50	6500	140	-	-	400
V20P300AUTO	20P300A	V20H300AUTO	20H300A	20	300	385	423	470	517	775	100	10000	290	-	-	800
V10P320AUTO	10P320A	V10H320AUTO	10H320A	10	320	420	459	510	561	840	25	3500	80	-	-	170
V14P320AUTO	14P320A	V14H320AUTO	14H320A	14	320	420	459	510	561	840	50	6500	150	-	-	380
V20P320AUTO	20P320A	V20H320AUTO	20H320A	20	320	420	459	510	561	840	100	10000	320	-	-	750
V10P385AUTO	10P385A	V10H385AUTO	10H385A	10	385	505	558	620	682	1025	25	3500	85	-	-	160
V14P385AUTO	14P385A	V14H385AUTO	14H385A	14	385	505	558	620	682	1025	50	6500	175	-	-	360
V20P385AUTO	20P385A	V20H385AUTO	20H385A	20	385	505	558	620	682	1025	100	10000	325	-	-	700
V10P420AUTO	10P420A	V10H420AUTO	10H420A	10	420	560	612	680	748	1120	25	3500	90	-	-	140
V14P420AUTO	14P420A	V14H420AUTO	14H420A	14	420	560	612	680	748	1120	50	6500	185	-	-	300
V20P420AUTO	20P420A	V20H420AUTO	20H420A	20	420	560	612	680	748	1120	100	10000	330	-	-	600
V10P440AUTO	10P440A	V10H440AUTO	10H440A	10	440	585	643.5	715	786.5	1180	25	3500	95	-	-	130
V14P440AUTO	14P440A	V14H440AUTO	14H440A	14	440	585	643.5	715	786.5	1180	50	6500	185	-	-	260
V20P440AUTO	20P440A	V20H440AUTO	20H440A	20	440	585	643.5	715	786.5	1180	100	10000	340	-	-	500
V10P460AUTO	10P460A	V10H460AUTO	10H460A	10	460	615	675	750	825	1240	25	3500	95	-	-	120
V14P460AUTO	14P460A	V14H460AUTO	14H460A	14	460	615	675	750	825	1240	50	6500	190	-	-	220
V20P460AUTO	20P460A	V20H460AUTO	20H460A	20	460	615	675	750	825	1240	100	10000	370	-	-	400
V10P510AUTO	10P510A	V10H510AUTO	10H510A	10	510	670	738	820	902	1355	25	3500	98	-	-	110
V14P510AUTO	14P510A	V14H510AUTO	14H510A	14	510	670	738	820	902	1355	50	6500	205	-	-	200
V20P510AUTO	20P510A	V20H510AUTO	20H510A	20	510	670	738	820	902	1355	100	10000	410	-	-	350

© 2024 Littelfuse, Inc.
Specifications are subject to change without notice.
Revised: GD. 04/17/24

AUMOV® Series
Radial Leaded Varistors

AUMOV® Varistor Series Device Ratings & Specifications cont...

Phenolic Coated Models		Silicone Coated Models		Size Disc Dia. (mm)	Max Continuous Voltage		Varistor Voltage at 1mA			Maximum Clamping Voltage		Max Peak Current (8 x 20µs 1 pulse)	Energy Rating (2ms, 1 pulse)	Energy (Load Dump, 10 pul ses)*	Jump Start DC V_{jump} (5 min)	Typical Capaci-tance f = 1MHz
Part Number (Base part)	Branding	Part Number (Base part)	Branding		V_{RMS}	V_{DC}	Min	Nom	Max	V_C	I_{PK}	I_{TM}	W_{TM}			
					(V)	(V)	(V)	(V)	(V)	(V)	(A)	(A)	(J)	(J)	(V)	(pF)
V10P550AUTO	10P550A	V10H550AUTO	10H550A	10	550	745	819	910	1001	1500	25	3500	98	-	-	100
V14P550AUTO	14P550A	V14H550AUTO	14H550A	14	550	745	819	910	1001	1500	50	6500	210	-	-	180
V20P550AUTO	20P550A	V20H550AUTO	20H550A	20	550	745	819	910	1001	1500	100	10000	450	-	-	300
V10P625AUTO	10P625A	V10H625AUTO	10H625A	10	625	825	900	1000	1100	1650	25	3500	110	-	-	90
V14P625AUTO	14P625A	V14H625AUTO	14H625A	14	625	825	900	1000	1100	1650	50	6500	235	-	-	160
V20P625AUTO	20P625A	V20H625AUTO	20H625A	20	625	825	900	1000	1100	1650	100	10000	490	-	-	250

Note:
1. Average power dissipation of transients not to exceed 0.2W, 0.25W, 0.4W, 0.6W or 1W for model sizes 5mm, 7mm, 10mm, 14mm and 20mm, respectively.
2. *Energy rating (auto load dump) for impulse duration of 40ms minimum to one half of peak current, 60sec interval ISO7637-2 pulse 5a and ISO16750-2 Table 5A.
3. The shift of Vnom (Varistor Volatge) may be to +/-15% for Load dump or Jump Start test.
4. The ratings and specifications of Silicone coated options are the same as the Phenolic coating, except the isolation voltage capability (Hi-Pot Encapsulation) is 2500V.

Current Energy and Power Dissipation Ratings

Figure 1A - Power Derating for Epoxy Coated

For applications exceeding 85ºC ambient temperature, the peak surge current and energy ratings must be reduced as shown below.

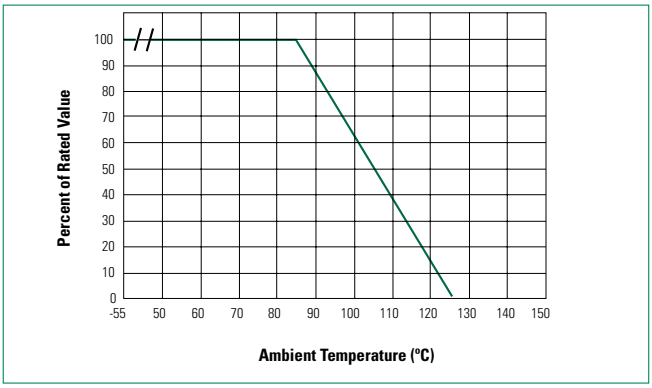

Figure 1B - Power Derating for Phenolic Coated and Silicone Coated

For applications exceeding 125ºC ambient temperature, the peak surge current and energy ratings must be reduced as shown below.

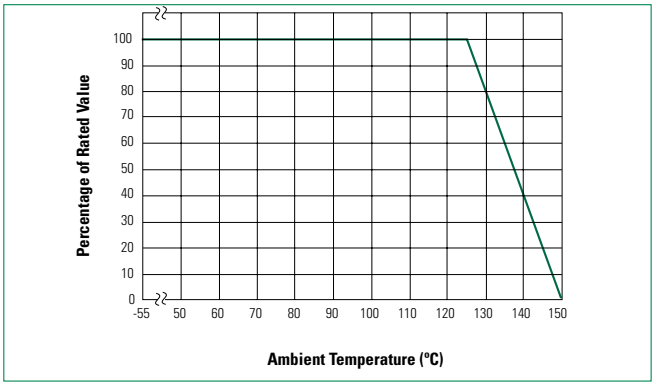

Fg. 2 Peak Pulse Current Test Waveform for Clamping Voltage

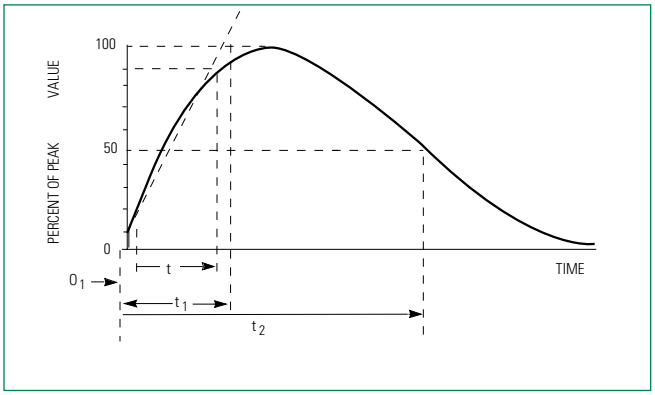

0_1 = Virtual Origin of Wave
t = Time from 10% to 90% of Peak
t_1 = Virtual Front Time = 1.25 x t
t_2 = Virtual Time to Half-Value (Impulse Duration)

Example - For an 8/20 µs Current Waveform:
8µs = t_1 = Virtual Front Time
20µs = t_2 = Virtual Time to Half-Value

© 2024 Littelfuse, Inc.
Specifications are subject to change without notice.

AUMOV® Series
Radial Leaded Varistors

Maximum Clamping Voltage for 5mm Parts
V05x14AUTO - V05x42AUTO

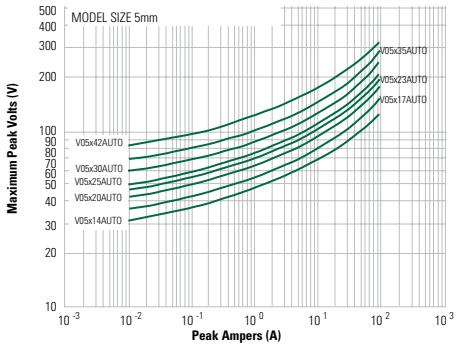

CLAMPING VOLTAGE FOR V05x14AUTO - V05x42AUTO

Maximum Clamping Voltage for 5mm Parts
V05x50AUTO - V05x95AUTO

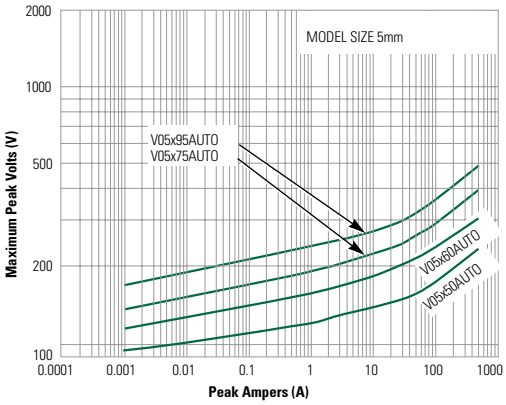

Maximum Clamping Voltage for 7mm Parts
V07x14AUTO - V07x42AUTO

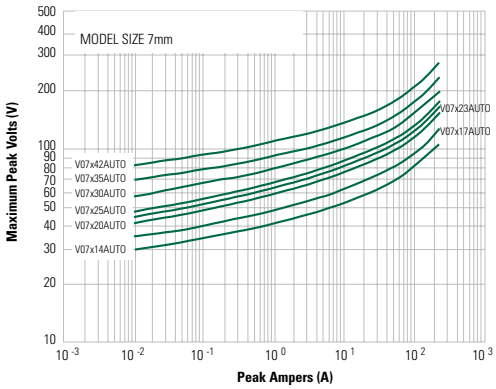

Maximum Clamping Voltage for 7mm Parts
V07x50AUTO - V07x95AUTO

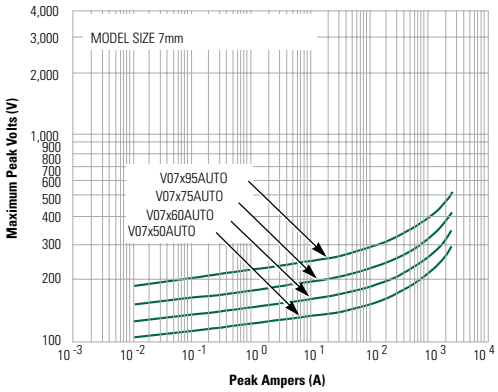

Maximum Clamping Voltage for 10mm Parts
V10x14AUTO - V10x42AUTO

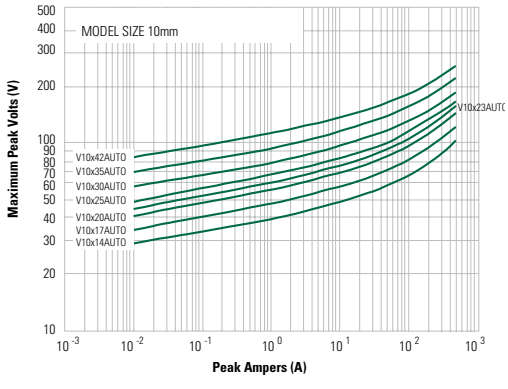

Maximum Clamping Voltage for 10mm Parts
V10x50AUTO - V10x95AUTO

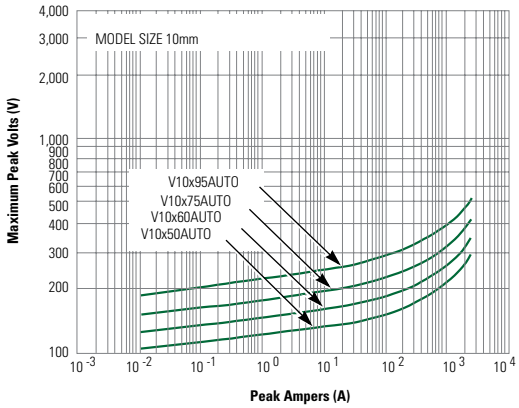

© 2024 Littelfuse, Inc.
Specifications are subject to change without notice.
Revised: GD. 04/17/24

AUMOV® Series
Radial Leaded Varistors

Maximum Clamping Voltage for 10mm Parts
V10x130AUTO - V10x625AUTO

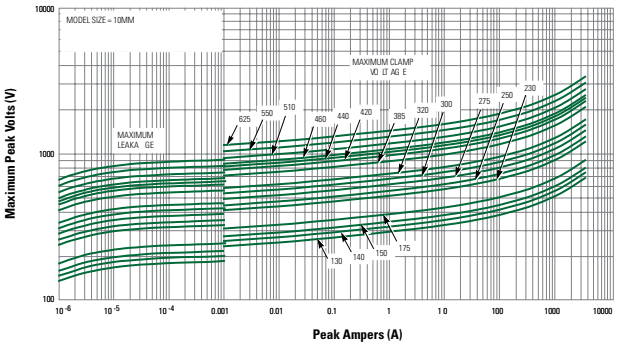

Maximum Clamping Voltage for 14mm Parts
V14x14AUTO - V14x42AUTO

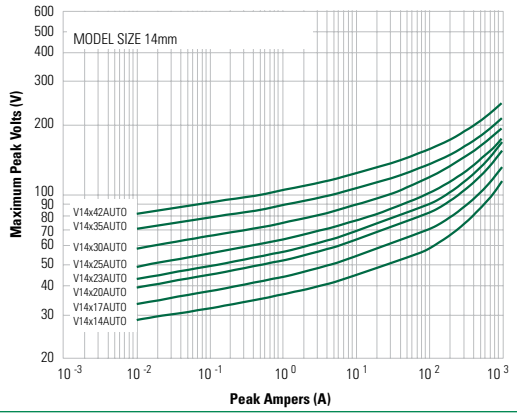

Maximum Clamping Voltage for 14mm Parts
V14x50AUTO - V14x95AUTO

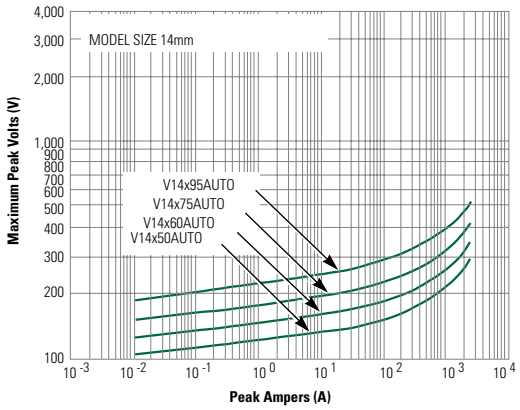

Maximum Clamping Voltage for 14mm Parts
V14x130AUTO - V14x625AUTO

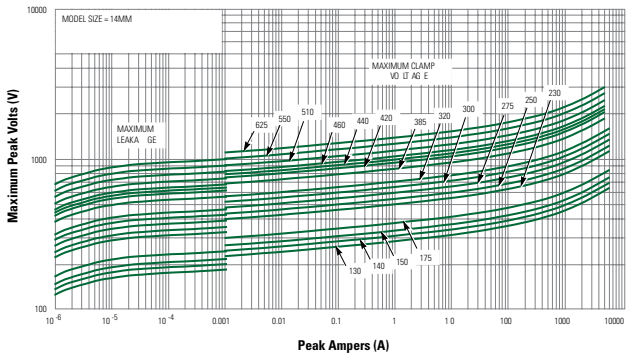

Maximum Clamping Voltage for 20mm Parts
V20x14AUTO - V20x42AUTO

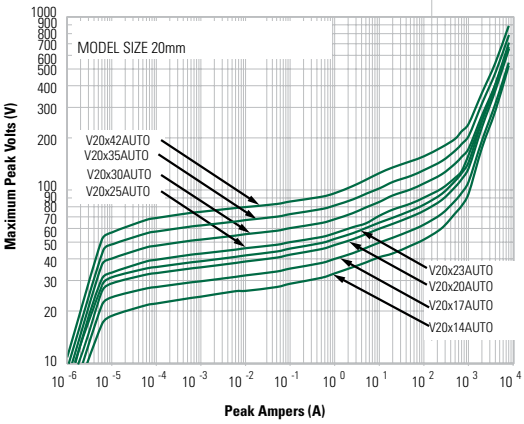

Maximum Clamping Voltage for 20mm Parts
V20x50AUTO - V20x95AUTO

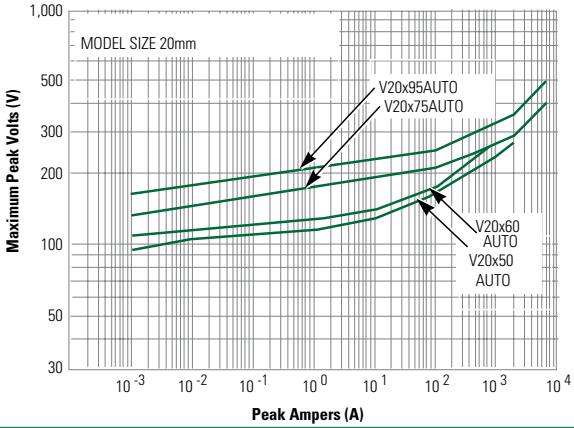

© 2024 Littelfuse, Inc.
Specifications are subject to change without notice.
Revised: GD. 04/17/24

AUMOV® Series
Radial Leaded Varistors

Maximum Clamping Voltage for 20mm Parts
V20x130AUTO - V20x625AUTO

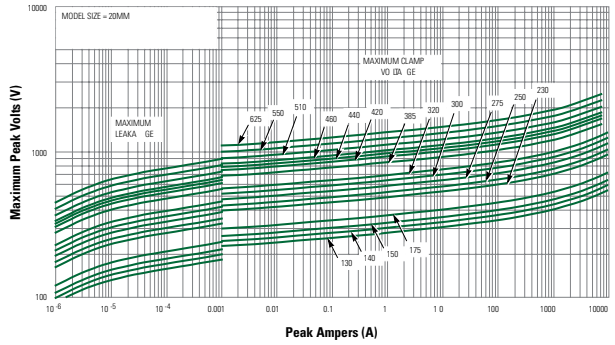

Repetitive Surge Capability for 5mm Parts
V05x14AUTO – V05x42AUTO

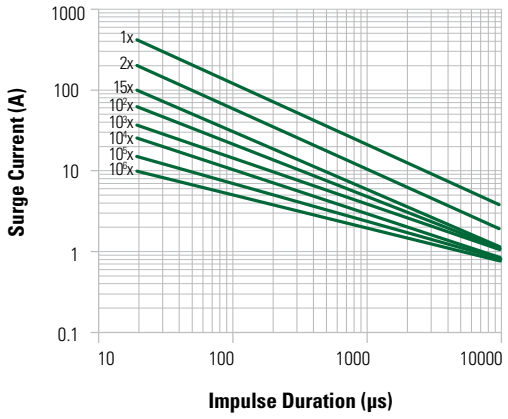

Repetitive Surge Capability for 5mm Parts
V05x50AUTO – V05x95AUTO

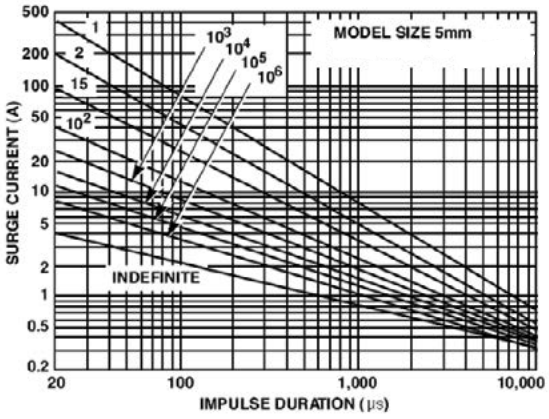

Repetitive Surge Capability for 7mm Parts
V07x14AUTO – V07x42AUTO

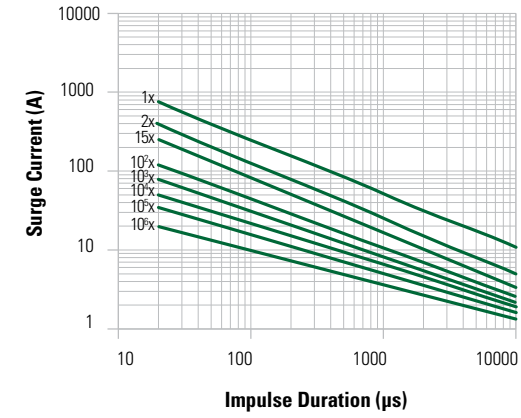

Repetitive Surge Capability for 7mm Parts
V07x50AUTO – V07x95AUTO

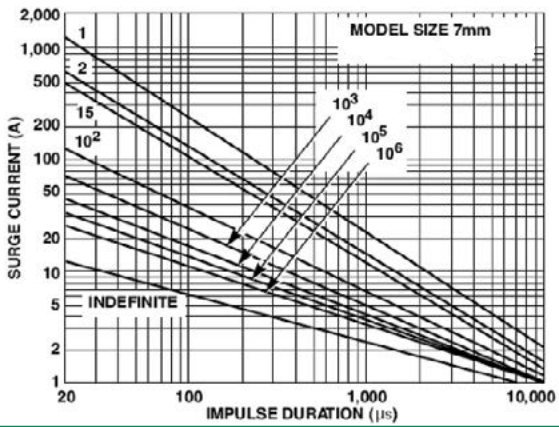

Repetitive Surge Capability for 10mm Parts
V10x14AUTO – V10x42AUTO

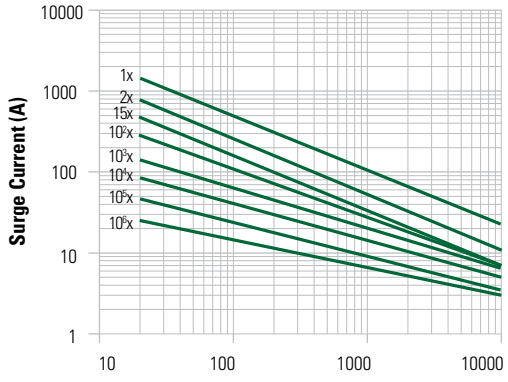

Note:

1. If pulse ratings are exceeded, a shift of $V_{N(DC)}$ (at specified current) of more then +/-10% could result. This type of shift, which normally results in a decrease of $V_{N(DC)}$, may result in the device not meeting the original published specifications, but does not prevent the device from continuing to function, and to provide ample protection.

2. Repetitive surge capability is qualified and tested based on 8/20us current waveform (not combination waveform) and UL1449 40.7.3 (Edition 4) test condition.

© 2024 Littelfuse, Inc.
Specifications are subject to change without notice.

Revised: GD. 04/17/24

AUMOV® Series
Radial Leaded Varistors

Repetitive Surge Capability for 10mm Parts
V10x50AUTO - V10x95AUTO

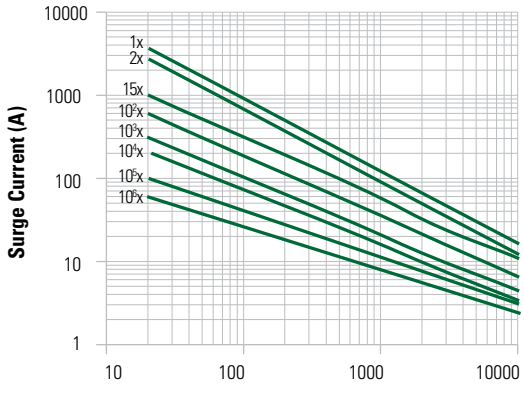

Repetitive Surge Capability for 10mm Parts
V10x130AUTO - V10x625AUTO

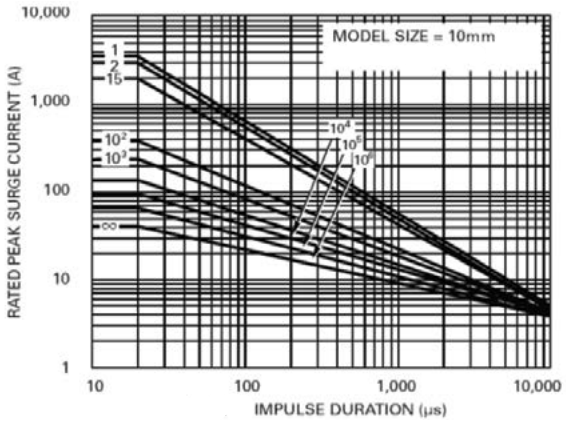

Repetitive Surge Capability for 14mm Parts
V14x14AUTO – V14x42AUTO

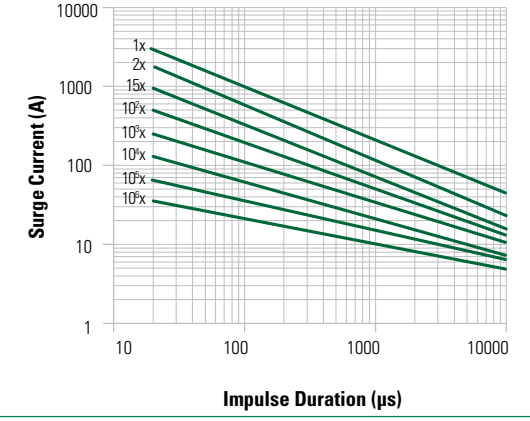

Repetitive Surge Capability for 14mm Parts
V14x50AUTO - V14x95AUTO

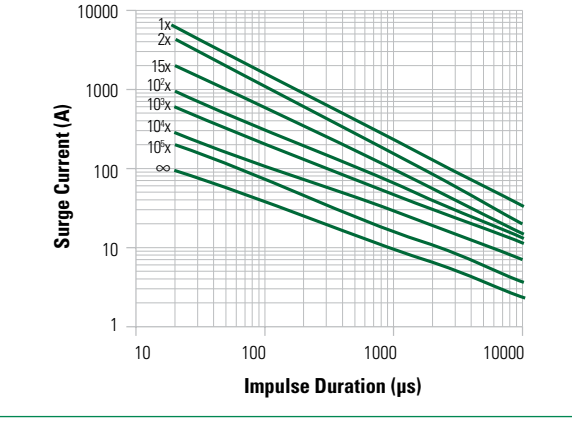

Repetitive Surge Capability for 14mm Parts
V14x130AUTO - V14x625AUTO

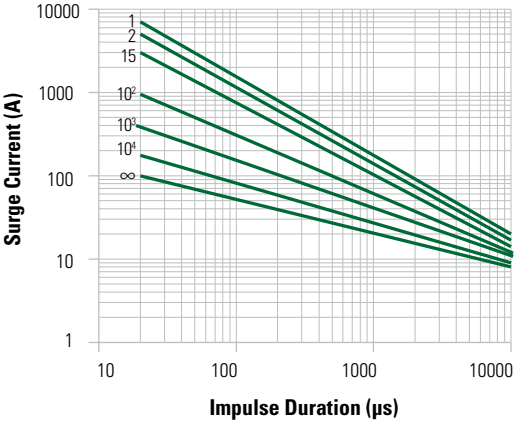

Repetitive Surge Capability for 20mm Parts
V020x14AUTO – V20x42AUTO

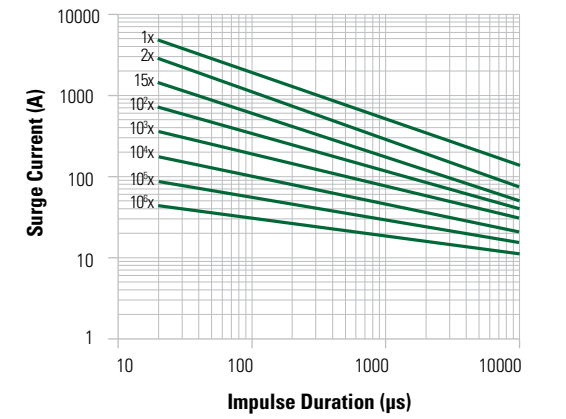

Note:

1. If pulse ratings are exceeded, a shift of $V_{N(DC)}$ (at specified current) of more then +/-10% could result. This type of shift, which normally results in a decrease of $V_{N(DC)}$, may result in the device not meeting the original published specifications, but does not prevent the device from continuing to function, and to provide ample protection.

2. Repetitive surge capability is qualified and tested based on 8/20us current waveform (not combination waveform) and UL1449 40.7.3 (Edition 4) test condition.

© 2024 Littelfuse, Inc.
Specifications are subject to change without notice.

Revised: GD. 04/17/24

AUMOV® Series
Radial Leaded Varistors

Repetitive Surge Capability for 20mm Parts
V20x50AUTO - V20x95AUTO

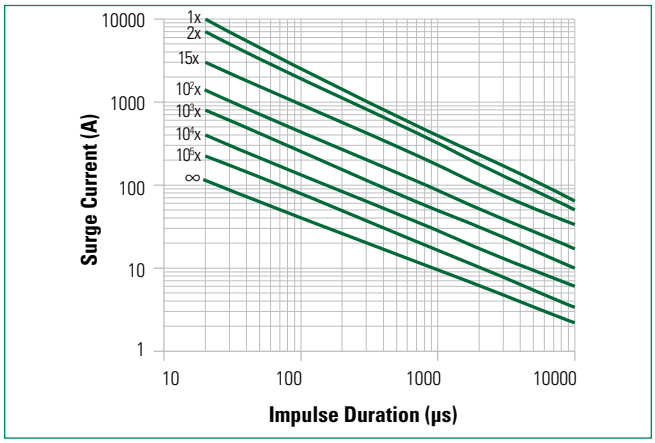

Repetitive Surge Capability for 20mm Parts
V20x130AUTO - V20x625AUTO

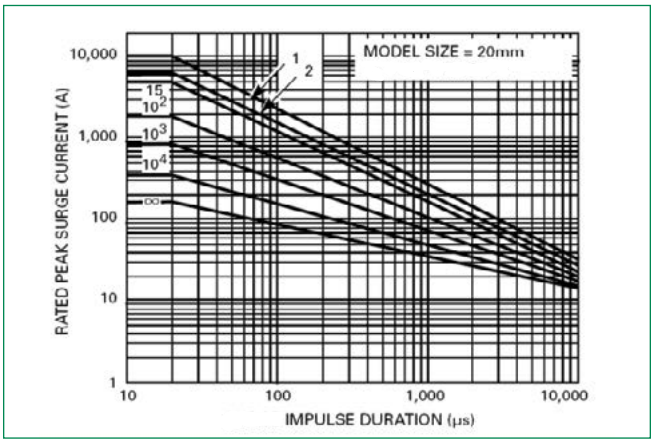

Wave Solder Profile

Non Lead–free Profile

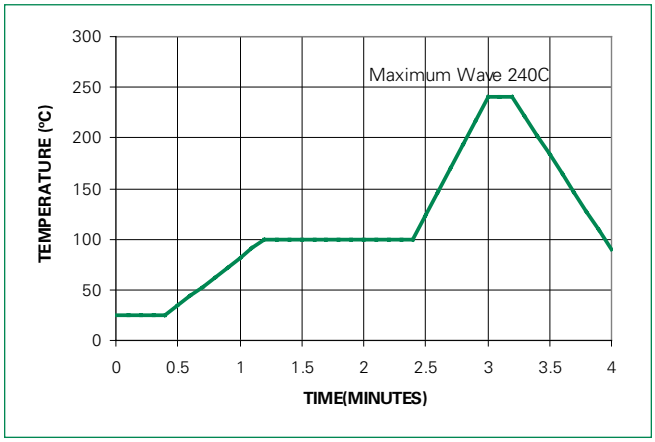

Lead–free Profile

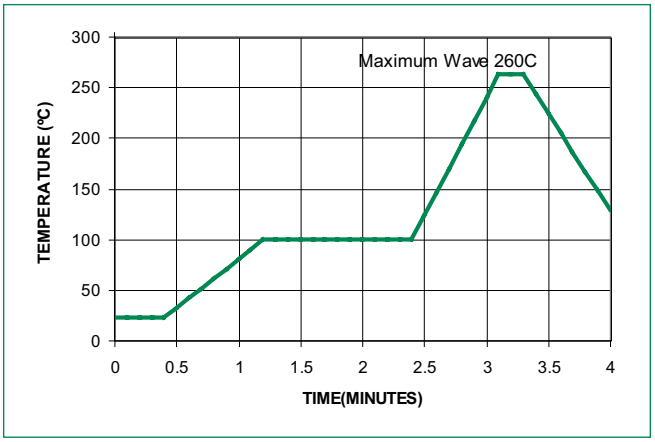

Physical Specifications

Lead Material	Copper Clad Steel Wire
Soldering Characteristics	Solderability per MIL–STD–202, Method 208
Insulating Material	Cured, flame retardant epoxy polymer meets UL94V–0 requirements
Device Labeling	Marked with LF, voltage and date code

Environmental Specifications

Humidity Aging	+85 °C, 85 % RH, 1000 hours +/-10% typical voltage change
Temperature Cycling Shock	-40°C to 85°C, 5 cycles for Epoxy coating; -40°C to 125°C, 1000 cycles for Phenolic and Silicone coating; +/-10% typical voltage change
Solvent Resistance	MIL–STD–202, Method 215
Moisture Sensitivity	Level 1, J-STD-020

© 2024 Littelfuse, Inc.
Specifications are subject to change without notice.
Revised: GD. 04/17/24

AUMOV® Series
Radial Leaded Varistors

Product Dimensions (mm)

Straight Lead

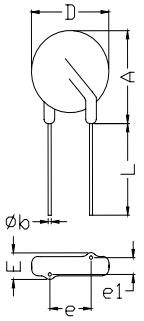

Outer Crimp Lead

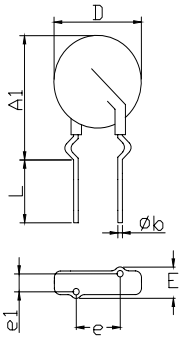

In-Line (Under Crimp) Lead

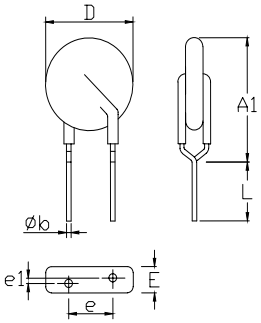

Inner Crimp Lead

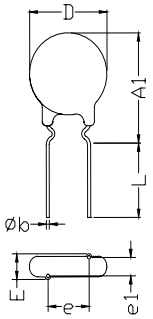

Dimension	V_{RMS} Voltage Model	5mm Size		7mm Size		10mm Size		14mm Size		20mm Size	
		Min. mm (in)	Max. mm (in)	Min. mm (in)	Max. mm (in)	Min. mm (in)	Max. mm (in)	Min. mm (in)	Max. mm (in)	Min. mm (in)	Max. mm (in)
A	11 - 320	-	10 (0.394)	-	12 (0.472)	-	16 (0.630)	-	20 (0.787)	-	26.5 (1.043)
	385 - 625	-	10.5 (0.413)	-	13 (0.512)	-	17.0 (0.689)	-	20.5 (0.807)	-	28.0 (1.102)
A1	All	-	13 (0.512)	-	15 (0.591)	-	19.5 (0.768)	-	22.5 (0.886)	-	29 (1.142)
ØD	All	-	7 (0.276)	-	9 (0.354)	-	12.5 (0.492)	-	17 (0.669)	-	23 (0.906)
e	11 - 95	4 (0.157)	6 (0.236)	4 (0.157)	6 (0.236)	6.5 (0.256)	8.5 (0.335)	6.5 (0.256)	8.5 (0.335)	6.5 (0.256)	8.5 (0.335)
	130 - 625									9.0 (0.354)	11.0 (0.433)
e_1	11 - 30	1 (0.039)	3 (0.118)	1 (0.039)	3 (0.118)	1 (0.039)	3 (0.118)	1 (0.039)	3 (0.118)	1 (0.039)	3 (0.118)
	35 - 320	1.5 (0.059)	3.5 (0.138)	1.5 (0.059)	3.5 (0.138)	1.5 (0.059)	3.5 (0.138)	1.5 (0.059)	3.5 (0.138)	1.5 (0.059)	3.5 (0.138)
	385 - 625	2.5 (0.098)	5.5 (0.217)	2.5 (0.098)	5.5 (0.217)	2.5 (0.098)	5.5 (0.217)	2.5 (0.098)	5.5 (0.217)	2.5 (0.098)	5.5 (0.217)
E	11 - 30	-	5.0 (0.197)	-	5.0 (0.197)	-	5.0 (0.197)	-	5.0 (0.197)	-	5.0 (0.197)
	35 - 320	-	5.6 (0.220)	-	5.6 (0.220)	-	5.6 (0.220)	-	5.6 (0.220)	-	5.6 (0.220)
	385 - 510	-	7.3 (0.287)	-	7.3 (0.287)	-	7.3 (0.287)	-	7.3 (0.287)	-	7.3 (0.287)
	550 - 625	-	8.3 (0.327)	-	8.3 (0.327)	-	8.3 (0.327)	-	8.3 (0.327)	-	8.3 (0.327)
Øb	All	0.585 (0.023)	0.685 (0.027)	0.585 (0.023)	0.685 (0.027)	0.76 (0.030)	0.86 (0.034)	0.76 (0.030)	0.86 (0.034)	0.76 (0.030)	0.86 (0.034)
L(bulk packaging only)	All	25.4 (1.00)	-	25.4 (1.00)	-	25.4 (1.00)	-	25.4 (1.00)	-	25.4 (1.00)	-
L_{TRIM}	All	2.41 (0.095)	4.69 (0.185)	2.41 (0.095)	4.69 (0.185)	2.41 (0.095)	4.69 (0.185)	2.41 (0.095)	4.69 (0.185)	2.41 (0.095)	4.69 (0.185)

Note: Dimensions in millimetres, (Inches) is typical.

© 2024 Littelfuse, Inc.
Specifications are subject to change without notice.
Revised: GD. 04/17/24

AUMOV® Series
Radial Leaded Varistors

Tape and Reel Specifications

5 and 7mm Devices

STRAIGHT LEADS "L1"

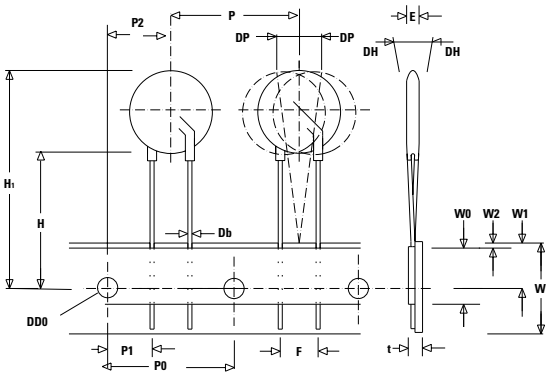

10, 14 and 20mm Devices

STRAIGHT LEADS "L1"

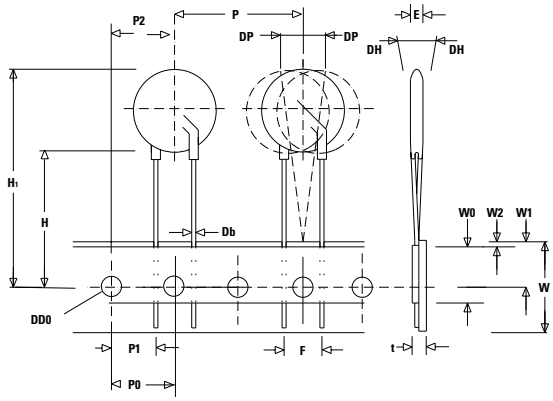

CRIMPED LEADS "L2"

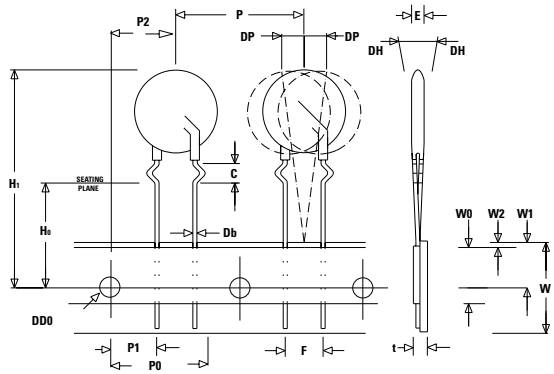

CRIMPED LEADS "L2"

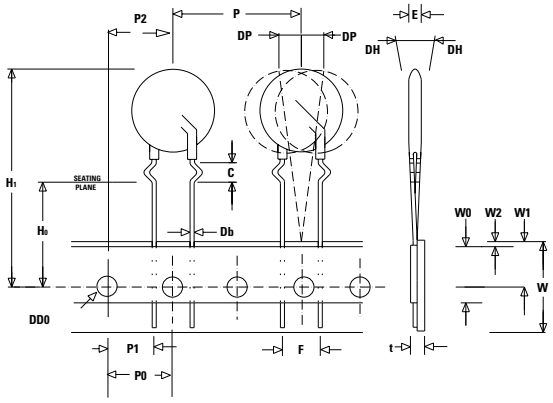

UNDER CRIMPED / IN-LINE LEADS "L3"

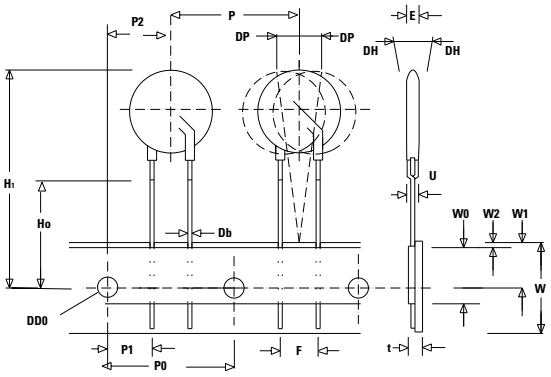

UNDER CRIMPED / IN-LINE LEADS "L3"

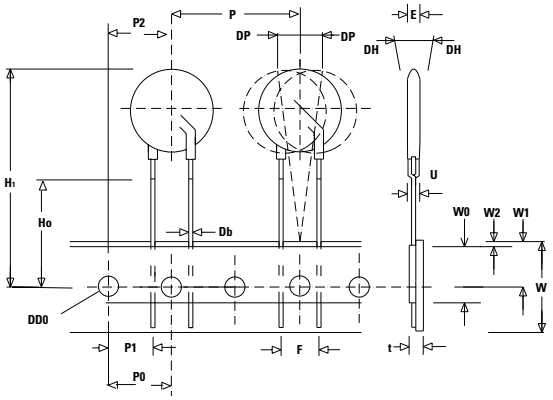

Refer to next page for dimension measurement specifics.

© 2024 Littelfuse, Inc.
Specifications are subject to change without notice.
Revised: GD. 04/17/24

AUMOV® Series
Radial Leaded Varistors

Tape and Reel Specifications (continued)

Symbol	Description	Model Size					
		5mm	7mm	10mm	14mm	20mm	
						(11Vac to 95Vac voltage)	≥115 Vac Voltage
P	Pitch of Component	12.7 +/- 1.0	12.7 +/- 1.0	25.4 +/- 1.0	25.4 +/- 1.0	25.4 +/- 1.0	25.4 +/- 1.0
P_0	Feed Hole Pitch	12.7 +/- 0.2	12.7 +/- 0.2	12.7 +/- 0.2	12.7 +/- 0.2	12.7 +/- 0.2	12.7 +/- 0.2
P_1	Feed Hole Center to Pitch	3.85 +/- 0.7	3.85 +/- 0.7	8.85 +/- 0.7	8.85 +/- 0.7	8.85 +/- 0.7	7.70 +/- 0.7
P_2	Hole Center to Component Center	6.35 +/- 1.0	6.35 +/- 1.0	12.7 +/- 0.7	12.7 +/- 0.7	12.7 +/- 0.7	12.7 +/- 0.7
F	Lead to Lead Distance	5.0 +/- 1.0	5.0 +/-1.0	7.5 +/- 1.0	7.5 +/- 1.0	7.5 +/- 1.0	10 +/- 1.0
h	Component Alignment	2.0 Max	2.0 Max	2.0 Max	2.0 Max	2.0 Max	2.0 Max
W	Tape Width	18.0 +1.0 / -0.5	18.0 +1.0 / -0.5	18.0 +1.0 / -0.5	18.0 +1.0 / -0.5	18.0 +1.0 / -0.5	18.0 + 1.0 / -0.5
W_0	Hold Down Tape Width	12.0 +/- 0.3	12.0 +/- 0.3	12.0 +/- 0.3	12.0 +/- 0.3	12.0 +/- 0.3	12.0 +/- 0.3
W_1	Hole Position	9.0 +0.75 / -0.50	9.0 +0.75 / -0.50	9.0 +0.75 / -0.50	9.0 +0.75 / -0.50	9.0 +0.75 / -0.50	9.0 +0.75 / -0.50
W_2	Hold Down Tape Position	0.5 Max	0.5 Max	0.5 Max	0.5 Max	0.5 Max	0.5 Max
H	Height from Tape Center to Component Base	18.0 +2.0 / -0.0	18.0 +2.0 / -0.0	18.0 +2.0 / -0.0	18.0 +2.0 / -0.0	18.0 +2.0 / -0.0	18.0 +2.0 / -0.0
H_0	Seating Plane Height	16.0 +/- 0.5	16.0 +/- 0.5	16.0 +/- 0.5	16.0 +/- 0.5	16.0 +/- 0.5	16.0 +/- 0.5
H_1	Component Height	29.0 Max	32.0 Max	36.0 Max	40.0 Max	46.5 Max	46.5 Max
D_0	Feed Hole Diameter	4.0 +/- 0.2	4.0 +/- 0.2	4.0 +/- 0.2	4.0 +/- 0.2	4.0 +/- 0.2	4.0 +/- 0.2
t	Total Tape Thickness	0.7 +/- 0.2	0.7 +/- 0.2	0.7 +/- 0.2	0.7 +/- 0.2	0.7 +/- 0.2	0.7 +/- 0.2
U	Undercrimp Width	8.0 Max	8.0 Max	8.0 Max	8.0 Max	8.0 Max	8.0 Max
p	Component Alignment	3° Max	3° Max	3° Max	3° Max	3° Max	3° Max

Notes:
1. Radial devices on tape are supplied with crimped leads, straight leads, or under-crimped leads
2. Leads are offset by product dimension e1
3. Conforms to ANSI and EIA specifications
4. Can be supplied to IEC Publication 286-2
5. 10mm parts are available on tape and reel up to 510 VAC only
6. 14mm and 20mm parts are available on tape and reel up to 550 VAC only

Part Numbering System

V 05 P 14 AUTO L1 B XXXXX

Littelfuse Varistor

Disc Size
05, 07, 10, 14 or 20 mm

Coating
E: Epoxy
P: Phenolic
H: Silicone
Available for 10, 14, or 20mm

$VM_{(AC)RMS}$
14V to 625V

AUMOV® Series
AEC-Q200 Table 10 Compliant for Phenolic and Silicone coating

Lead Formation
Blank or L1: Straight
L2: Outer Crimp
L3: In-Line
L4: Trim/Outer Crimp (Bulk pack only)
L5: Inner Crimp
Note: for Vm(AC) 100V to 625V parts, the L1, L2, L3, L4, and L5 should be replaced by 1,2,3,4, and 5 respectively

Packaging
Blank or B: Bulk Pack
T: Tape and Reel
A: Ammo Pack

Other Non-Standard Options

Disclaimer Notice - Information furnished is believed to be accurate and reliable. However, users should independently evaluate the suitability of and test each product selected for their own applications. Littelfuse products are not designed for, and may not be used in, all applications. Read complete Disclaimer Notice at www.littelfuse.com/disclaimer-electronics.

© 2024 Littelfuse, Inc.
Specifications are subject to change without notice.
Revised: GD. 04/17/24