LA Series
Radial Lead Varistors



Description

The LA Varistor Series of transient voltage surge suppressors are radial leaded varistors (MOVs) that are designed to be operated continuously across AC power lines. These UL recognized varistors require very little mounting space, and are offered in various standard lead form options.

The LA Varistor Series are available in four model sizes: 7mm, 10mm, 14mm and 20mm; and have a $V_{M(AC)RMS}$ voltage range from 130V to 1000V, and an energy absorption capability up to 360J. Some LA Series model numbers are available with clamping voltage selections, designated by a model number suffix of either A or B. The 'A' selection is the standard model; the 'B' selection provides a lower clamping voltage. See LA Series Device Ratings and Specifications Table for part number and brand information.

Web Resources

Download ECAD models, order samples, and find technical recources at www.littelfuse.com/la-varistors

Agency Approvals

Agency	Agency Approval	Agency File Number
cULus	UL1449	E320116
VDE	CECC 42201-006 IEC 61051-1 IEC 61051-2 IEC 60950-1 (Annex Q) for 14mm and 20mm only	116895
SEMKO	CECC 42201-006 IEC 61051-1 IEC 61051-2 IEC 60950-1 (Annex Q) for 14mm and 20mm only	E1273/F

Features & Benefits

- Lead–free, Halogen-Free and RoHS compliant.
- Energy absorption capability (W_{TM}) up to 360J
- Wide operating voltage range $V_{M(AC)RMS}$ 130V to 1000V
- No derating up to 85ºC ambient
- Available in tape and reel or bulk pack

Absolute Maximum Ratings

• For ratings of individual members of a series, see Device Ratings and Specifications chart

Continuous	LA Series	Units
Steady State Applied Voltage:		
AC Voltage Range ($V_{M(AC)RMS}$)	130 to 1000	V
DC Voltage Range ($V_{M(DC)}$)	175 to 1200	V
Transients:		
Peak Pulse Current (I_{TM})		
For 8/20µs Current Wave (See Figure 2)	1200 to 6500	A
Single Pulse Energy Range		
For 10/1000µs Current Wave (W_{TM})	11 to 360	J
Operating Ambient Temperature Range (T_A)	-55 to +85	ºC
Storage Temperature Range (T_{STG})	-55 to +125	ºC
Temperature Coefficient (a^V) of Clamping Voltage (V_C) at Specified Test Current	<0.01	%/ºC
Hi-Pot Encapsulation (COATING Isolation Voltage Capability) (Dielectric must withstand indicated DC voltage for one minute per MIL-STD 202, Method 301)	2500	V
COATING Insulation Resistance	1000	MΩ

CAUTION: Stresses above those listed in "Absolute Maximum Ratings" may cause permanent damage to the device. This is a stress only rating and operation of the device at these or any other conditions above those indicated in the operational sections of this specification is not implied.

© 2024 Littelfuse, Inc.
Specifications are subject to change without notice.
Revised: VL 16/9/2024

LA Series
Radial Lead Varistors

LA Series Ratings & Specifications

Part Number	Branding	Model Size Disc Dia. (mm)	Maximum Rating (85°C)				Specifications (25°C)				
			Continuous		Transient		Varistor Voltage at 1mA DC Test Current		Maximum Clamping Voltage 8 x 20 µs		Typical Capacitance f = 1MHz
			V_{RMS}	V_{DC}	Energy 10 x 1000µs	Peak Current 8 x 20µs					
			$V_{M(AC)}$	$V_{M(DC)}$	W_{TM}	I_{TM}	V_{NOM} Min	V_{NOM} Max	V_C	I_{PK}	C
			(V)	(V)	(J)	(A)	(V)	(V)	(V)	(A)	(pF)
V130LA1P	P1301	7	130	175	11	1200	198	242	390	10	180
V130LA2P	P1302	7	130	175	11	1200	184.5	225.5	340	10	180
V130LA5P	P1305	10	130	175	20	2500	184.5	225.5	340	25	450
V130LA10AP	P130L10	14	130	175	38	4500	184.5	225.5	340	50	1000
V130LA20AP	P130L20	20	130	175	70	6500	184.5	225.5	340	100	1900
V130LA20BP	P130L20B	20	130	175	70	6500	190	220	325	100	1900
V140LA2P	P1402	7	140	180	12	1200	198	242	360	10	160
V140LA5P	P1405	10	140	180	22	2500	198	242	360	25	400
V140LA10AP	P140L10	14	140	180	42	4500	198	242	360	50	900
V140LA20AP	P140L20	20	140	180	75	6500	198	242	340	100	1750
V150LA1P	P1501	7	150	200	13	1200	225	275	430	10	150
V150LA2P	P1502	7	150	200	13	1200	216	264	395	10	150
V150LA5P	P1505	10	150	200	25	2500	216	264	395	25	360
V150LA10AP	P150L10	14	150	200	45	4500	216	264	395	50	800
V150LA20AP	P150L20	20	150	200	80	6500	216	264	395	100	1600
V150LA20BP	P150L20B	20	150	200	80	6500	216	243	360	100	1600
V175LA2P	P1752	7	175	225	15	1200	243	297	455	10	130
V175LA5P	P1755	10	175	225	30	2500	243	297	455	25	350
V175LA10AP	P175L10	14	175	225	55	4500	243	297	455	50	700
V175LA20AP	P175L20	20	175	225	90	6500	243	297	455	100	1400
V230LA4P	P2304	7	230	300	20	1200	324	396	595	10	100
V230LA10P	P230L	10	230	300	35	2500	324	396	595	25	250
V230LA20AP	P230L20	14	230	300	70	4500	324	396	595	50	550
V230LA40AP	P230L40	20	230	300	122	6500	324	396	595	100	1100
V250LA2P	P2502	7	250	330	21	1200	369	451	730	10	90
V250LA4P	P2504	7	250	330	21	1200	351	429	650	10	90
V250LA10P	P250L	10	250	330	40	2500	351	429	650	25	220
V250LA20AP	P250L20	14	250	330	72	4500	351	429	650	50	500
V250LA40AP	P250L40	20	250	330	130	6500	351	429	650	100	1000
V250LA40BP	P250L40B	20	250	330	130	6500	354	413	620	100	1000
V275LA2P	P2752	7	275	369	23	1200	405	495	775	10	80
V275LA4P	P2754	7	275	369	23	1200	387	473	710	10	80
V275LA10P	P275L	10	275	369	45	2500	387	473	710	25	200
V275LA20AP	P275L20	14	275	369	75	4500	387	473	710	50	450
V275LA40AP	P275L40	20	275	369	140	6500	387	473	710	100	900
V275LA40BP	P275L40B	20	275	369	140	6500	389	453	680	100	900
V300LA2P	P3002	7	300	405	25	1200	441	539	870	10	70
V300LA4P	P3004	7	300	405	25	1200	423	517	775	10	70
V300LA10P	P300L	10	300	405	46	2500	423	517	775	25	180
V300LA20AP	P300L20	14	300	405	77	4500	423	517	775	50	400
V300LA40AP	P300L40	20	300	405	165	6500	423	517	775	100	800
V320LA7P	P3207	7	320	420	25	1200	459	561	850	10	65
V320LA10P	P320L	10	320	420	48	2500	459	561	850	25	170
V320LA20AP	P320L20	14	320	420	80	4500	459	561	850	50	380
V320LA40BP	P320L40	20	320	420	150	6500	462	540	810	100	750
V385LA7P	P3857	7	385	505	27	1200	558	682	1025	10	60
V385LA10P	P385L	10	385	505	51	2500	558	682	1025	25	160
V385LA20AP	P385L20	14	385	505	85	4500	558	682	1025	50	360
V385LA40BP	P385L40	20	385	505	160	6500	558	682	1025	100	700

© 2024 Littelfuse, Inc.
Specifications are subject to change without notice.
Revised: VL 16/9/2024

LA Series
Radial Lead Varistors

LA Series Ratings & Specifications (Continued...)

Part Number	Branding	Model Size Disc Dia. (mm)	Maximum Rating (85°C)				Specifications (25°C)				
			Continuous		Transient		Varistor Voltage at 1mA DC Test Current		Maximum Clamping Voltage 8 x 20 µs		Typical Capacitance f = 1MHz
			V_{RMS}	V_{DC}	Energy 10 x 1000µs	Peak Current 8 x 20µs					
			$V_{M(AC)}$	$V_{M(DC)}$	W_{TM}	I_{TM}	V_{NOM} Min	V_{NOM} Max	V_C	I_{PK}	C
			(V)	(V)	(J)	(A)	(V)	(V)	(V)	(A)	(pF)
V420LA7P	P4207	7	420	560	30	1200	612	748	1120	10	55
V420LA10P	P420L	10	420	560	55	2500	612	748	1120	25	140
V420LA20AP	P420L20	14	420	560	90	4500	612	748	1120	50	300
V420LA40BP	P420L40	20	420	560	160	6500	610	720	1060	100	600
V460LA7P	P4607	7	460	615	37	1200	643.5	786.5	1190	10	55
V460LA10P	P460L	10	460	615	56	2500	643.5	786.5	1190	25	120
V460LA20AP	P460L20	14	460	615	100	4500	643.5	786.5	1190	50	280
V460LA40BP	P460L40	20	460	615	170	6500	643.5	755.5	1110	100	560
V480LA7P	P4807	7	480	640	35	1200	675	825	1240	10	50
V480LA10P	P480L	10	480	640	60	2500	675	825	1240	25	120
V480LA40AP	P480L40	14	480	640	105	4500	675	825	1240	50	270
V480LA80BP	P480L80	20	480	640	180	6500	675	790	1160	100	550
V510LA10P	P510L	10	510	675	63	2500	738	902	1350	25	100
V510LA40AP	P510L40	14	510	675	110	4500	738	902	1350	50	250
V510LA80BP	P510L80	20	510	675	190	6500	738	860	1280	100	500
V575LA10P	P575L	10	575	730	65	2500	819	1001	1500	25	90
V575LA40AP	P575L40	14	575	730	120	4500	819	1001	1500	50	220
V575LA80BP	P575L80	20	575	730	220	6500	819	960	1410	100	450
V625LA10P	P625L	10	625	825	67	2500	900	1100	1650	25	80
V625LA40AP	P625L40	14	625	825	125	4500	900	1100	1650	50	210
V625LA80BP	P625L80	20	625	825	230	6500	900	1100	1650	100	425
V680LA10P	P680L	10	680	875	75	2500	990	1210	1875	25	65
V680LA80AP	P680L80	14	680	875	145	4500	990	1210	1875	50	190
V680LA100BP	P680L100	20	680	875	260	6500	990	1130	1700	100	380
V660LA10P	P660L	10	660	850	70	2500	972	1188	1820	25	70
V660LA50AP	P660L50	14	660	850	140	4500	972	1188	1820	50	200
V660LA100BP	P660L100	20	660	850	250	6500	940	1100	1650	100	400
V1000LA80AP	P1000L8	14	1000	1200	220	4500	1500	1800	2700	50	130
V1000LA160BP	P1000L16	20	1000	1200	360	6500	1425	1600	2420	100	250

Note: Average power dissipation of transients not to exceed 0.25W, 0.4W, 0.6W or 1W for model sizes 7mm, 10mm, 14mm and 20mm, respectively.

Phenolic Coating vOption -- LA Series Varistors for Hi-Temperature Operating Conditions:

- Phenolic–coated LA Series devices are available with improved maximum operating maximum temperature 125°C.
- These devices also have improved temperature cycling performance capability.
- Ratings and Specifications are as per standard LA Series except Hi–Pot Encapsulation (Isolation Voltage Capability) = 500V.
- These devices are not UL, CSA, VDE or CECC certified.
- To order: add X1347 to end of part number (e.g. V230LA20A**PX1347**).
- Product marking:

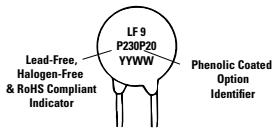

© 2024 Littelfuse, Inc.
Specifications are subject to change without notice.
Revised: VL 16/9/2024

LA Series
Radial Lead Varistors

Copper Electrode Option:

- Add 'W' to the end of the part number (e.g. V230LA20AP**W**)
- Product marking:

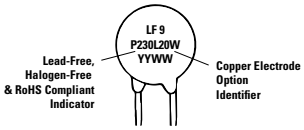

Current Energy and Power Dissipation Ratings

Should transients occur in rapid succession, the average power dissipation is the energy (watt-seconds) per pulse times the number of pulses per second. The power so developed must be within the specifications shown on the Device Ratings and Specifications Table for the specific device. The operating values of a MOV need to be derated at high temperatures as shown above. Because varistors only dissipate a relatively small amount of average power they are not suitable for repetitive applications that involve substantial amounts of average power dissipation.

Figure 1A - Power Derating for Epoxy Coated

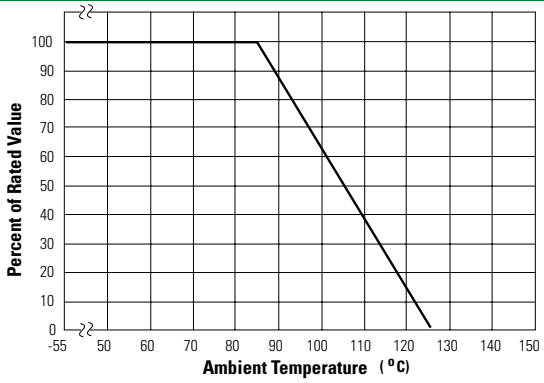

Figure 1 Current, Enegery and power Derating Curve

Figure 1B - Power Derating for Phenolic Coated

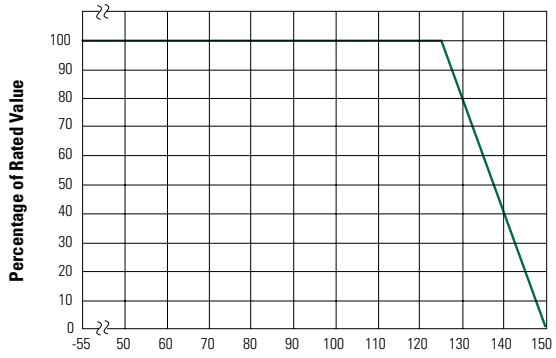

Peak Pulse Current Test Waveform

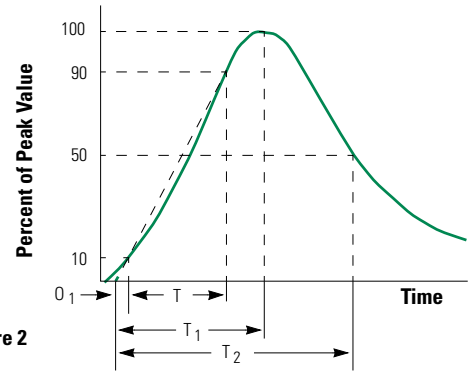

Figure 2

01 = Virtual Origin of Wave
T = Time from 10% to 90% of Peak
T1 = Rise Time = 1.25 x T
T2 = Decay Time

Example: For an 8/20 µs Current Waveform:
8µs = T1 = Rise Time
20µs = T2 = Decay Time

© 2024 Littelfuse, Inc.
Specifications are subject to change without notice.

LA Series
Radial Lead Varistors

Transient V-I Characteristics Curves

Maximum Clamping Voltage for 7mm Parts

V130LA1(P) - V300LA2(P)

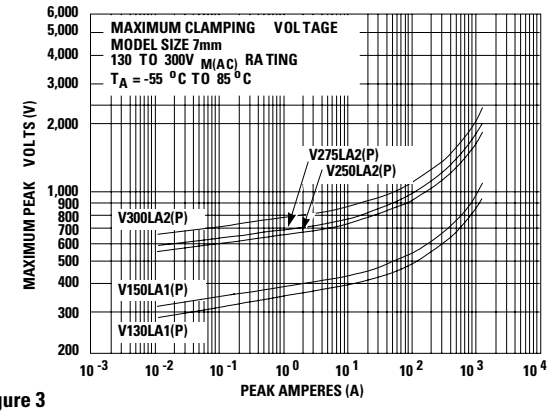

Figure 3

V130LA2(P) - V300LA4(P)

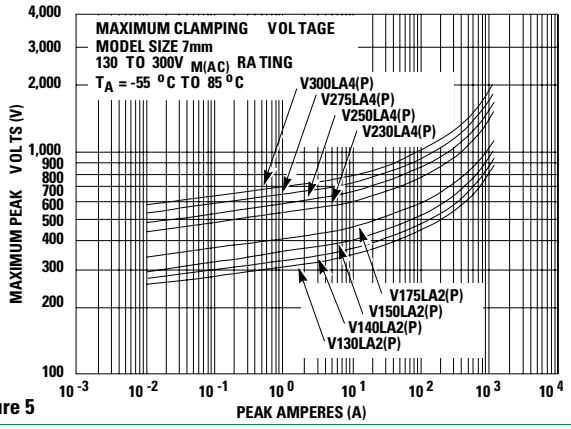

Figure 5

V320LA7(P) - V480LA7(P)

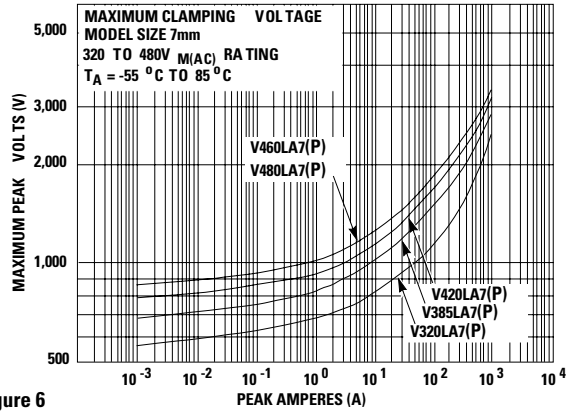

Figure 6

Pulse Rating Curves

Repetitive Surge Capability for 7mm Parts

V130LA1(P) - V480LA7(P)

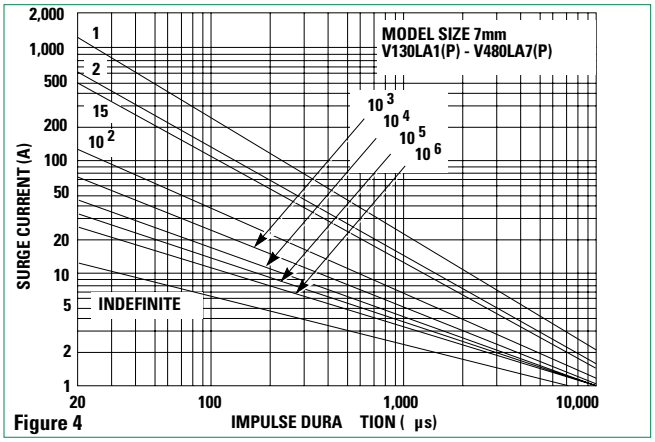

Figure 4

Note:
Repetitive surge capability is qualified and tested based on 8/20us current waveform (not combination waveform) and UL1449 40.7.3 (Edition 4) test condition.

© 2024 Littelfuse, Inc.
Specifications are subject to change without notice.
Revised: VL 16/9/2024

LA Series
Radial Lead Varistors

Transient V-I Characteristics Curves (Continued...)

Maximum Clamping Voltage for 10mm Parts

V130LA5(P) - V420LA10(P)

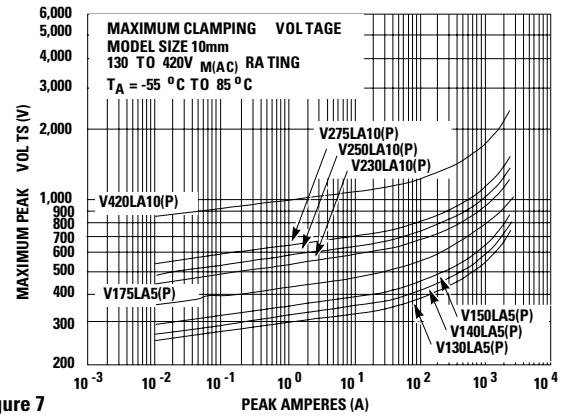

Figure 7

V300LA10(P) - V680LA10(P)

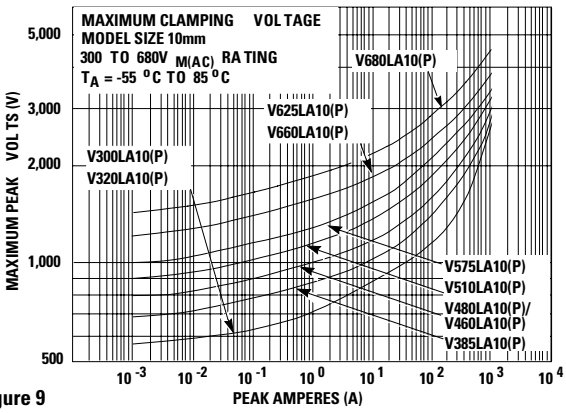

Figure 9

Pulse Rating Curves (Continued...)

Repetitive Surge Capability for 10mm Parts

V130LA5(P) - V680LA10(P)

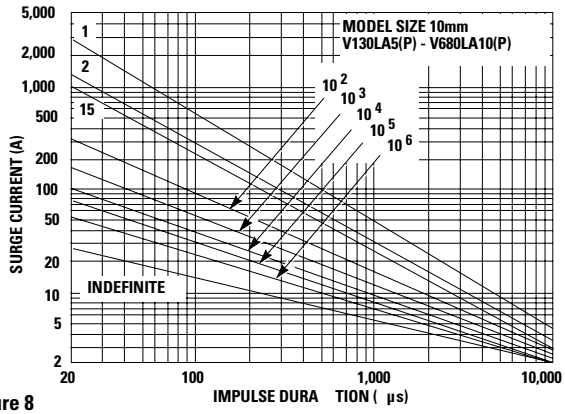

Figure 8

Note:
Repetitive surge capability is qualified and tested based on 8/20us current waveform (not combination waveform) and UL1449 40.7.3 (Edition 4) test condition.

© 2024 Littelfuse, Inc.
Specifications are subject to change without notice.
Revised: VL 16/9/2024

LA Series
Radial Lead Varistors

Transient V-I Characteristics Curves (Continued...)

Maximum Clamping Voltage for 14mm Parts

V130LA10A(P) - V320LA20A

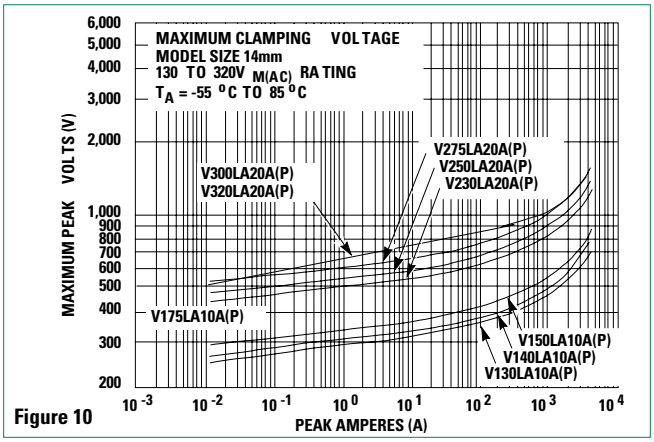

Figure 10

V385LA20A(P) V1000LA80A(P)

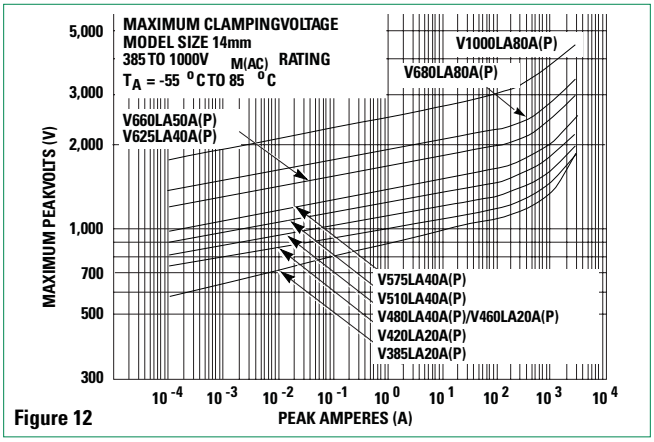

Figure 12

Pulse Rating Curves (Continued...)

Repetitive Surge Capability for 14mm Parts

V130LA10A(P) - V320LA20A(P)

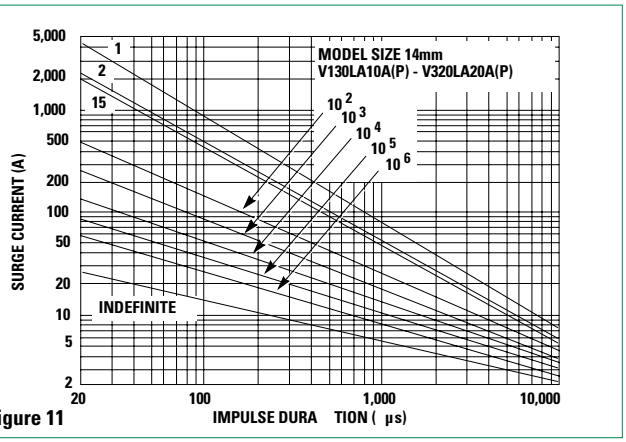

Figure 11

V385LA20A(P) - V1000LA80A(P)

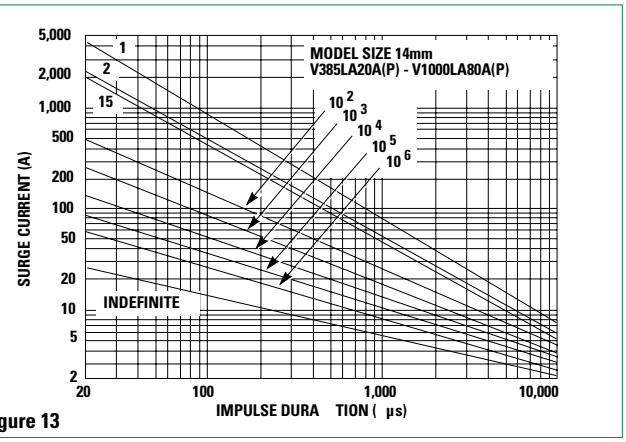

Figure 13

Note:
Repetitive surge capability is qualified and tested based on 8/20us current waveform (not combination waveform) and UL1449 40.7.3 (Edition 4) test condition.

© 2024 Littelfuse, Inc.
Specifications are subject to change without notice.
Revised: VL 16/9/2024

LA Series
Radial Lead Varistors

Maximum Clamping Voltage for 20mm Parts

V130LA20A(P) - V275LA40A(P)

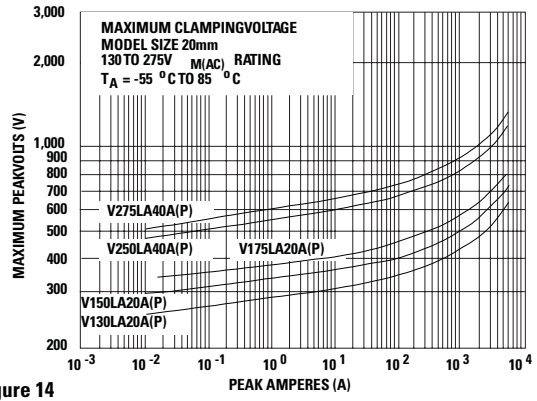

Figure 14

V300LA40A - V1000LA160B

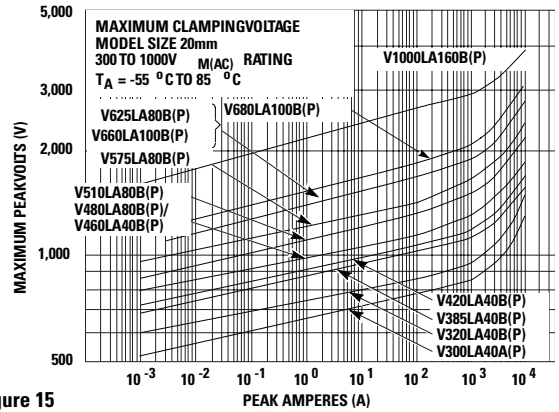

Figure 15

V130LA20B(P) - V275LA40(P)

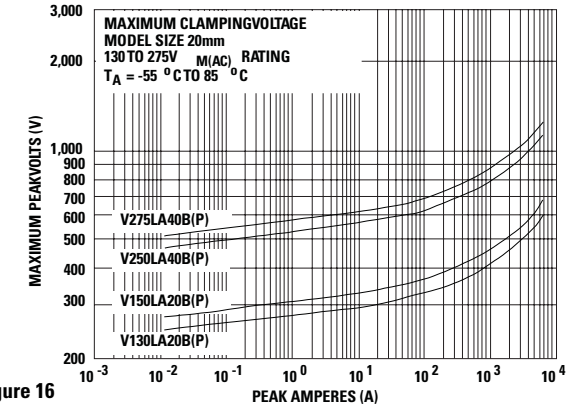

Figure 16

V130LA20A(P) - V275LA40A(P)

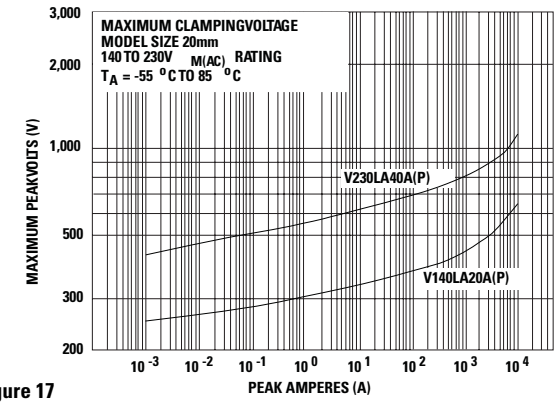

Figure 17

Note:
If pulse ratings are exceeded, a shift of VN(DC) (at specified current) of more than +/-10% could result. This type of shift, which normally results in a decrease of VN(DC), may result in the device not meeting the original published specifications, but does not prevent the device from continuing to function, and to provide ample protection.

Repetitive Surge Capability for 20mm Parts

V130LA20A(P) - V320LA40B(P)

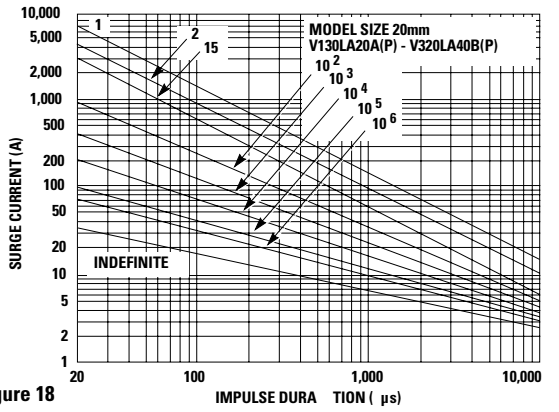

Figure 18

V385LA40B(P) - V1000LA160B(P)

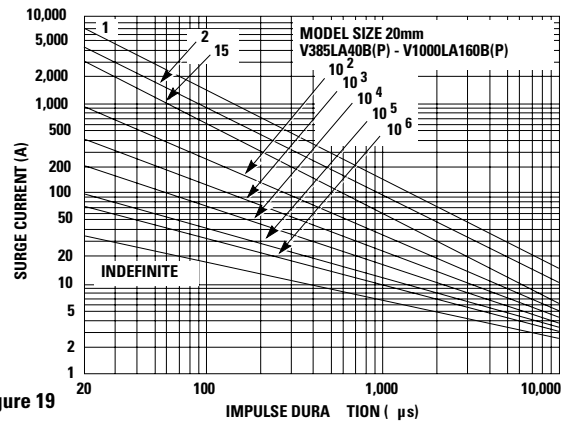

Figure 19

Note:
Repetitive surge capability is qualified and tested based on 8/20us current waveform (not combination waveform) and UL1449 40.7.3 (Edition 4) test condition.

© 2024 Littelfuse, Inc.
Specifications are subject to change without notice.
Revised: VL 16/9/2024

LA Series
Radial Lead Varistors

Wave Solder Profile

Non Lead–free Profile

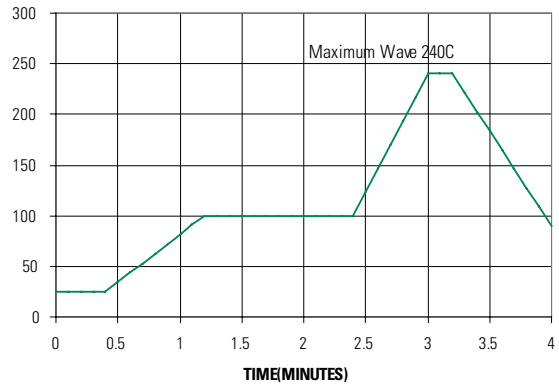

Figure 20

Lead–free Profile

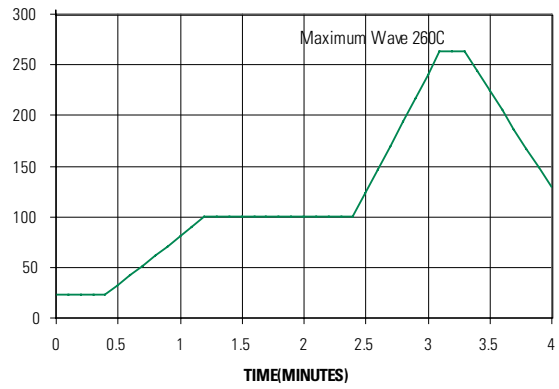

Figure 21

Physical Specifications

Lead Material	Copper Clad Steel Wire
Soldering Characteristics	Solderability per MIL–STD–202, Method 208
Insulating Material	Cured, flame retardant epoxy polymer meets UL94V–0 requirements
Device Labeling	Marked with LF, voltage, UL/CSA logos, and date code

Environmental Specifications

Operating Ambient Temperature Range	-55°C to +85°C
Storage Temperature Range	-55°C to +125°C
Humidity Aging	+85°C, 85% RH, 1000 hours +/-10% typical voltage change
Thermal Shock	+85°C to -40°C 5 times +/-10% typical voltage change
Solvent Resistance	MIL–STD–202, Method 215
Moisture Sensitivity	Level 1, J-STD-020

© 2024 Littelfuse, Inc.
Specifications are subject to change without notice.
Revised: VL 16/9/2024

LA Series
Radial Lead Varistors

Product Dimensions (mm)

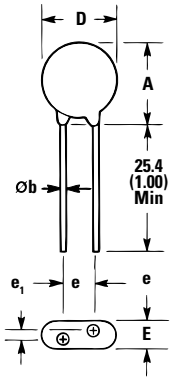

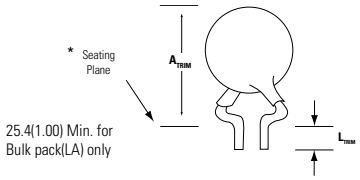

Crimped and Trimmed Lead
Crimped leads are standard on LA types supplied in tape and reel and are denoted by the model letter "T."
Model letter "S" denotes straight leads and letter "U" denotes special under-crimped leads.
*Seating plane interpretation per IEC-717

Dimension	V_{RMS} Voltage Model	7mm Size		10mm Size		14mm Size		20mm Size	
		Min. mm (in)	Max. mm (in)	Min. mm (in)	Max. mm (in)	Min. mm (in)	Max. mm (in)	Min. mm (in)	Max. mm (in)
A	V130LA-V320LA	-	12 (0.472)	-	16 (0.630)	-	20 (0.787)	-	26.5 (1.043)
	V385LA-V1000LA	-	13 (0.512)	-	17 (0.689)	-	20.5 (0.807)	-	28 (1.102)
D	All	-	9 (0.354)	-	12.5 (0.492)	-	17 (0.669)	-	23 (0.906)
e	All	4 (0.157)	6 (0.236)	6.5 (0.256)	8.5 (0.335)	6.5 (0.256)	8.5 (0.335)	6.5 (0.256) (Note 2)	8.5 (Note 2)
e_1	V130LA-V320LA	1.5 (0.059)	3.5 (0.138)	1.5 (0.059)	3.5 (0.138)	1.5 (0.059)	3.5 (0.138)	1.5 (0.059)	3.5 (0.138)
	V385LA-V1000LA	2.5 (0.098)	5.5 (0.217)	2.5 (0.098)	5.5 (0.217)	2.5 (0.098)	5.5 (0.217)	2.5 (0.098)	5.5 (0.217)
E	V130LA-V320LA	-	5.6 (0.220)	-	5.6 (0.220)	-	5.6 (0.220)	-	5.6 (0.220)
	V385LA-V510LA	-	7.3 (0.287)	-	7.3 (0.287)	-	7.3 (0.287)	-	7.3 (0.287)
	V550LA-V680LA	-	8.3 (0.327)	-	8.3 (0.327)	-	8.3 (0.327)	-	8.3 (0.327)
	V1000LA	-	-	-	-	-	10.8 (0.425)	-	10.8 (0.425)
Øb	All (Note 3)	0.585 (0.023)	0.685 (0.027)	0.76 (0.030)	0.86 (0.034)	0.76 (0.030)	0.86 (0.034)	0.76 (0.030) (Note 2)	0.86 (0.034) (Note 2)
A_{TRIM}	All	-	15 (0.591)	-	19.5 (0.768)	-	22.5 (0.886 (Note 4)	-	29.0 (1.142)
L_{TRIM}	All	2.41 (0.095)	4.69 (0.185)	2.41 (0.095)	4.69 (0.185)	2.41 (0.095)	4.69 (0.185)	2.41 (0.095)	4.69 (0.185)

Notes :
1. Dimensions in millimeters, (inches) in parentheses.
2. 10mm (9mm Min. & 11mm Max.) ALSO AVAILABLE; see additional lead style options
3. 1000V parts supplied with lead wire of diameter 1.00 -/+ 0.05 (0.039 -/+ 0.002)
4. 'A' Max. for V1000LC80A (P) = 24.00 (0.945")

© 2024 Littelfuse, Inc.
Specifications are subject to change without notice.
Revised: VL 16/9/2024

LA Series
Radial Lead Varistors

Tape and Reel Specifications

(Dimensions presented on following page.)

7mm Devices

Crimped Leads "LT"

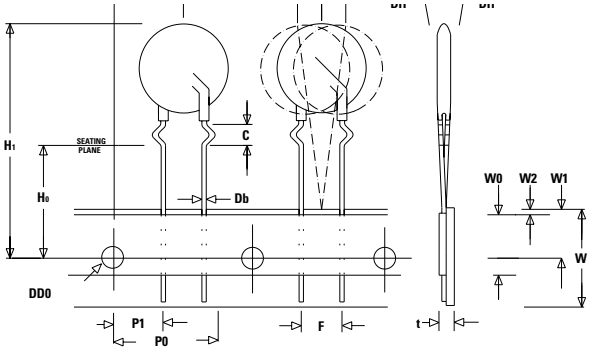

Crimped Leads "ZT"

10, 14 and 20mm Devices

Crimped Leads "LT"

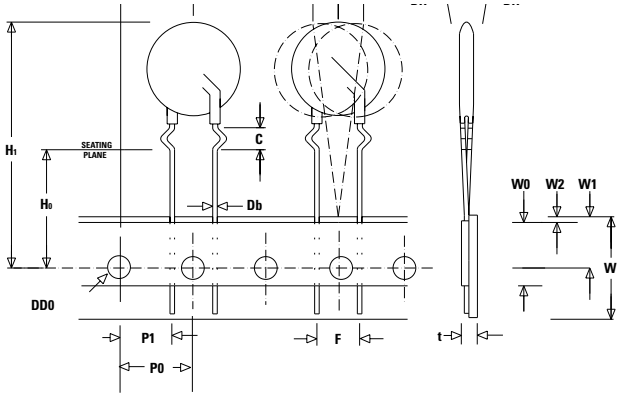

Crimped Leads "ZT"

Straight Leads "Ls"

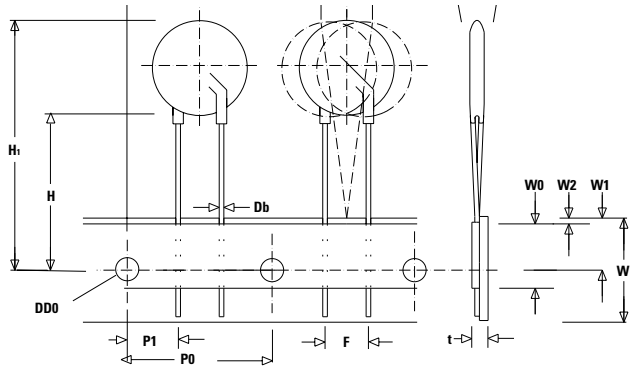

Straight Leads "ZS"

Straight Leads "Ls"

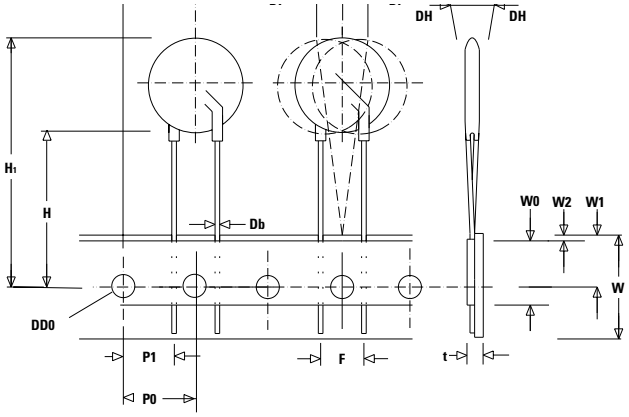

Straight Leads "ZS"

Under-crimped Leads "Lu"

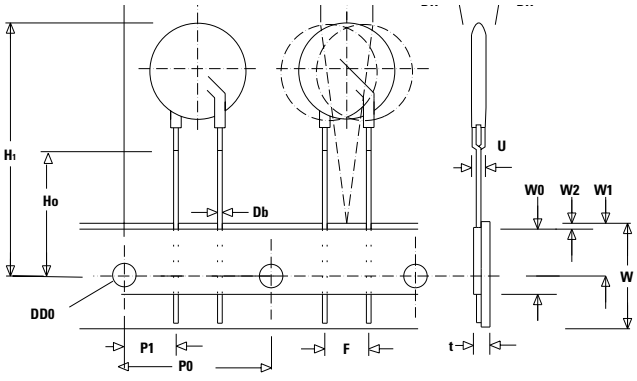

Under-crimped Leads "ZU"

Under-crimped Leads "LU"

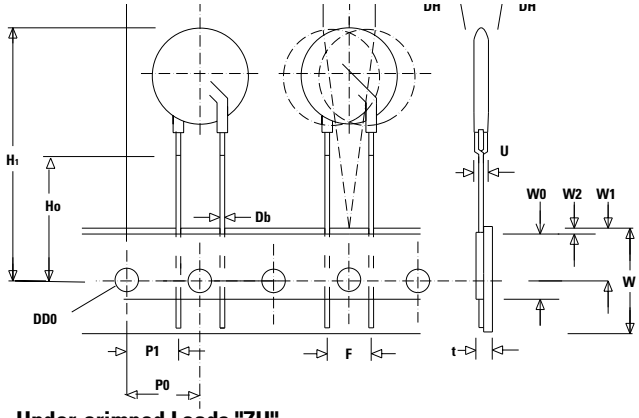

Under-crimped Leads "ZU"

© 2024 Littelfuse, Inc.
Specifications are subject to change without notice.
Revised: VL 16/9/2024

LA Series
Radial Lead Varistors

Tape and Reel Specifications (continued)

- Can be supplied to IEC Publication 286-2
- Radial devices on tape are supplied with crimped leads, straight leads, or under-crimped leads
- 7mm parts are available on tape and reel up to 480 VAC only
- 10mm parts are available on tape and reel up to 510 VAC only
- 14mm and 20mm parts are available on tape and reel up to 550 VAC only

Symbol	Description	Model Size			
		7mm	10mm	14mm	20mm
P	Pitch of Component	12.7 +/- 1.0	25.4 +/- 1.0	25.4 +/- 1.0	25.4 +/- 1.0
P_0	Feed Hole Pitch	12.7 +/- 0.2	12.7 +/- 0.2	12.7 +/- 0.2	12.7 +/- 0.2
P_1	Feed Hole Center to Pitch	3.85 +/- 0.7	8.85 +/- 0.7	8.85 +/- 0.7	8.85 +/- 0.7
P_2	Hole Center to Component Center	6.35 +/- 0.7	12.7 +/- 0.7	12.7 +/- 0.7	12.7 +/- 0.7
F	Lead to Lead Distance	5.0 +/- 0.8	7.5 +/-0.8	7.5 +/- 0.8	7.5 +/- 0.8
h	Component Alignment	2.0 Max	2.0 Max	2.0 Max	2.0 Max
W	Tape Width	18.0 +1.0 / -0.5	18.0 +1.0 / -0.5	18.0 +1.0 / -0.5	18.0 +1.0 / -0.5
W_0	Hold Down Tape Width	12.0 +/- 0.3	12.0 +/- 0.3	12.0 +/- 0.3	12.0 +/- 0.3
W_1	Hole Position	9.0 +0.75 / -0.50	9.0 +0.75 / -0.50	9.0 +0.75 / -0.50	9.0 +0.75 / -0.50
W_2	Hold Down Tape Position	0.5 Max	0.5 Max	0.5 Max	0.5 Max
H	Height from Tape Center to Component Base	18.0 +2.0 / -0.0	18.0 +2.0 / -0.0	18.0 +2.0 / -0.0	18.0 +2.0 / -0.0
H_0	Seating Plane Height	16.0 +/- 0.5	16.0 +/- 0.5	16.0 +/- 0.5	16.0 +/- 0.5
H_1	Component Height	32.0 Max	36.0 Max	40.0 Max	46.5 Max
D_0	Feed Hole Diameter	4.0 +/- 0.2	4.0 +/- 0.2	4.0 +/- 0.2	4.0 +/- 0.2
T	Total Tape Thickness	0.7 +/- 0.2	0.7 +/- 0.2	0.7 +/- 0.2	0.7 +/- 0.2
U	Under-crimp Width	8.0 Max	8.0 Max	8.0 Max	8.0 Max
P	Component Alignment	3° Max 1.00mm	3° Max 1.00mm	3° Max 1.00mm	3° Max

Note: Dimensions are in mm.

Standard Bulk Pack Quantity

Varistor Voltage Model	Standard Bulk Pack Quantity			
	Varistor Model Size			
	7mm	10mm	14mm	20mm
130-275	1500	1000	700	500
300-460	1500	1000	600	400
510-625	1500	1000	500	400
660	N/A	1000	500	400
680	N/A	1000	400	300
1000	N/A	N/A	300	200

© 2024 Littelfuse, Inc.
Specifications are subject to change without notice.
Revised: VL 16/9/2024

LA Series
Radial Lead Varistors

Part Numbering System

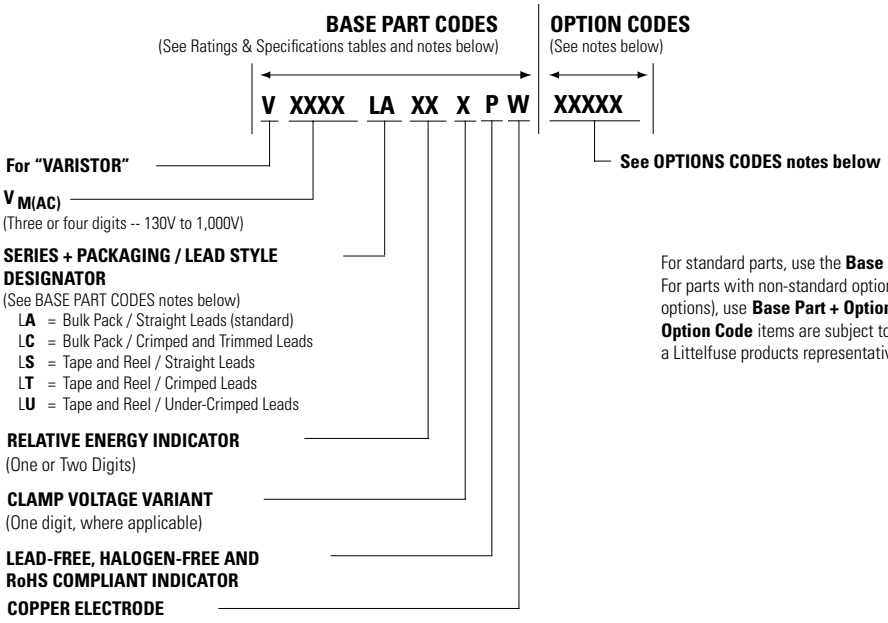

For standard parts, use the **Base Part** designator only.
For parts with non-standard options (such as additional form, packaging and lead space options), use **Base Part + Option Code.**
Option Code items are subject to availability and minimum order requirements. Please contact a Littelfuse products representative for additional information or questions

Ordering Notes:

BASE PART CODES:

Series + Packaging / Lead Style Designators:

Ordering examples:

Straight Lead Bulk Pack (standard)	Straight Lead Tape & Reel	Crimped Lead Tape & Reel	Crimped & Trimmed Lead Bulk Pack	Under-Crimp Lead Tape & Reel
V130**LA**2P	V130**LS**2P	V130**LT**2P	V130**LC**2P	V130**LU**2P

Crimped leads are standard on LA Series varistors supplied in tape and reel, denoted with "LT." For crimped leads without trimming and any varitions other than that described above, please contact Littelfuse.

Littelfuse LA Series varistors are shipped standard in bulk pack with straight leads and lead spacing outlined in the Package Dimensions section of this data sheet. Contact your Littelfuse sales representative to discuss non-standard options.

OPTION CODES:

X10: 10mm lead spacing option --

For 10 (-/+1) mm lead spacing (available on 20mm diameter models only), append standard model BASE PART number with "X10."
Example:

Standard Model	Order As
V130LA20AP	V130LA20AP**X10**

X2855: Nickel Barrier coated wire option --

All standard parts use tinned copper clad steel wire. Nickel Barrier coated wire is available as an option, consisting of Copper wire with a flashing of Nickel followed by a top coating of Tin. To order append standard model BASE PART number with "X2855."
Example:

Standard Model	Order As
V130LA20AP	V130LA20AP**X2855**

X1347: Hi-Temperature phenolic coating option --

Phenolic Coated LA Series devices are available with improved maximum operating maximum temperature of 125°C.

To order, add X1347 to end of part number
(Example: V230LA20APX1347).

For additional information please refer to the section labeled "Phenolic Coating Option" on the third page of this document under the "Electrical Characteristics" table.

Disclaimer Notice - Information furnished is believed to be accurate and reliable. However, users should independently evaluate the suitability of and test each product selected for their own applications. Littelfuse products are not designed for, and may not be used in, all applications. Read complete Disclaimer Notice at www.littelfuse.com/disclaimer-electronics.

© 2024 Littelfuse, Inc.
Specifications are subject to change without notice.
Revised: VL 16/9/2024