UNCONTROLLED DOCUMENT

PART NUMBER	REV.
LDS-E8006RI	

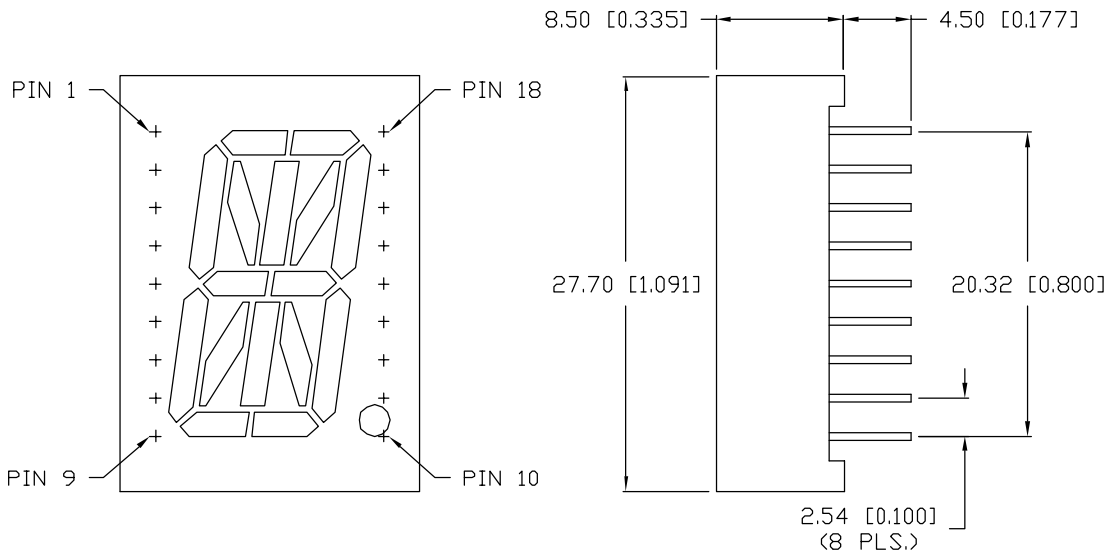

ELECTRO-OPTICAL CHARACTERISTICS T_A=25°C I_f=10mA

PARAMETER	MIN	TYP	MAX	UNITS	TEST COND
PEAK WAVELENGTH		660		nm	
FORWARD VOLTAGE		1.7	2.2	V_f	
REVERSE VOLTAGE	4.0			V_r	I_r=100µA
AXIAL INTENSITY		10000		µcd	I_f=10mA
EMITTED COLOR:	RED				
FACE COLOR:	GRAY				
SEGMENT COLOR:	MILKY WHITE DIFFUSED				

LIMITS OF SAFE OPERATION AT 25°C PER CHIP

PARAMETER	MAX	UNITS
PEAK FORWARD CURRENT*	150	mA
STEADY CURRENT	30	mA
POWER DISSIPATION	100	mW
DERATE FROM 25°C	-1.2	mW/°C
OPERATING, STORAGE TEMP.	-40 TO +85	°C
SOLDERING TEMP.	+260	°C
2.0mm FROM BODY		3 SEC. MAX

* t<10µS

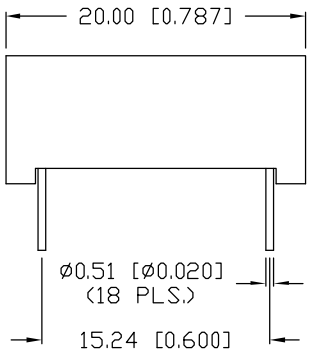

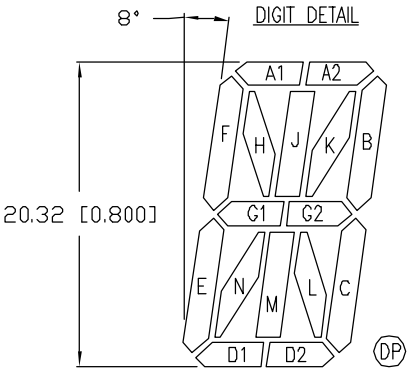

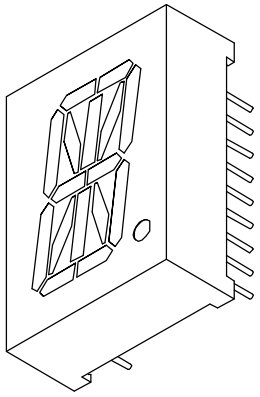

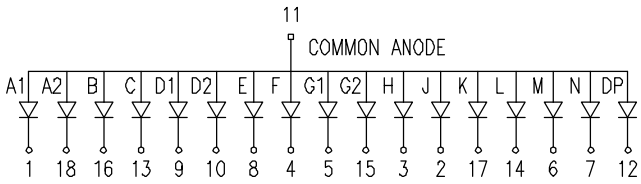

UNCONTROLLED DOCUMENT

*UNLESS OTHERWISE SPECIFIED TOLERANCES PER DECIMAL PRECISION ARE: X=±1 (±0.039), X.X=±0.5 (±0.020), X.XX=±0.25 (±0.010), X.XXX=±0.127 (±0.005). LEAD SIZE=±0.05 (±0.002), LEAD LENGTH=±0.75 (±0.030). MIN= $^{+\text{DECIMAL PRECISION}}_{-0.00}$ MAX.= $^{+0.00}_{-\text{DECIMAL PRECISION}}$

REV.	PART NUMBER	CONFIDENTIAL INFORMATION	LUMEX INC.	DRAWN BY:	CHECKED BY:	APPROVED BY:	DATE: 6.11.01
	LDS-E8006RI	THE INFORMATION CONTAINED IN THIS DOCUMENT IS THE PROPERTY OF LUMEX INC. EXCEPT AS SPECIFICALLY AUTHORIZED IN WRITING BY LUMEX INC., THE HOLDER OF THIS DOCUMENT SHALL KEEP ALL INFORMATION CONTAINED HEREIN CONFIDENTIAL AND SHALL PROTECT SAME IN WHOLE OR IN PART FROM DISCLOSURE AND DISSEMINATION TO ALL THIRD PARTIES.	290 E. HELEN ROAD PALATINE, IL 60067-6976 PHONE: +1.847.359.2790 US WEB: www.lumex.com TW WEB: www.lumex.com.tw	BC			PAGE: 1 OF 1
	0.800" 16 SEGMENT, ALPHANUMERIC LED DISPLAY, 660nm SUPER RED CHIPS, GRAY FACE WITH WHITE SEGMENTS, COMMON ANODE, RIGHT DECIMAL PLACE.	RELIABILITY NOTE OUR MANY YEARS OF EXPERIENCE DATA ACCUMULATION INDICATE THAT SOLDER HEAT IS A MAJOR CAUSE OF EARLY AND FUTURE FAILURE. PLEASE PAY ATTENTION TO YOUR SOLDERING PROCESS.					SCALE: N/A