LUMILEDS

ILLUMINATION

LUXEON MX

Unmatched performance in a proven package

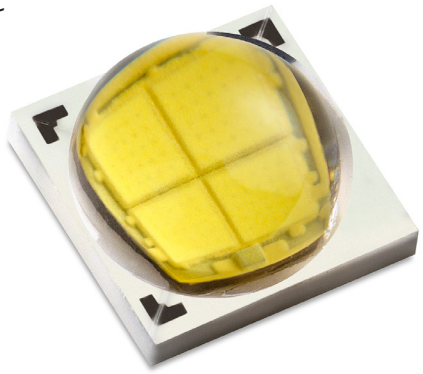

LUXEON MX is a high power emitter enabling cost effective, high reliability fixtures for High Bay and Outdoor applications requiring system efficiency of up to 157 lm/W. This breakthrough LED provides double the flux compared to previous generations with an even more robust high power design. Designed to be optically compatible with LUXEON M, LUXEON MX enables luminaire manufacturers to instantly upgrade their systems to market leading efficiency without investing design resources.

FEATURES AND BENEFITS

- 2,000 lumens at 130 lm/W enables cost effective 100 lm/W fixtures
- 1,200 lumens at 150 lm/W enables high performance 120 lm/W fixtures
- Double the flux vs. comparable emitters in 120 lm/W systems
- More robust package for improved reliability at higher drive currents
- Same footprint and optically compatible with LUXEON M for an instant upgrade

PRIMARY APPLICATIONS

- High Bay & Low Bay
  - Industrial
- Outdoor
  - Streetlights

c UL us No. E352519 RoHS COMPLIANT

 ©2019 Lumileds Holding B.V. All rights reserved.

Table of Contents

General Product Information . . . 2
- Product Test Conditions . . . 2
- Part Number Nomenclature . . . 2
- Lumen Maintenance . . . 2
- Environmental Compliance . . . 2

Performance Characteristics . . . 3
- Product Selection Guide . . . 3
- Optical Characteristics . . . 4
- Electrical and Thermal Characteristics . . . 4

Absolute Maximum Ratings . . . 4

Operating Conditions . . . 5

Characteristic Curves . . . 5
- Spectral Power Distribution Characteristics . . . 5
- Light Output Characteristics . . . 6
- Forward Current Characteristics . . . 8
- Radiation Pattern Characteristics . . . 10

Product Bin and Labeling Definitions . . . 11
- Decoding Product Bin Labeling . . . 11
- Luminous Flux Bins . . . 11
- Color Bin Definitions . . . 12
- Correlated Color Temperature Bins . . . 12
- Forward Voltage Bins . . . 13

Mechanical Dimensions . . . 13

Reflow Soldering Guidelines . . . 14
- JEDEC Moisture Sensitivity . . . 14
- Solder Pad Design . . . 15

Packaging Information . . . 16
- Pocket Tape Dimensions . . . 16
- Reel Dimensions . . . 17

 ©2019 Lumileds Holding B.V. All rights reserved.

General Product Information

Product Test Conditions

LUXEON MX LEDs are tested and binned with a DC drive current specified below at a junction temperature, T_j, of 85°C:

700mA – LUXEON MX 12V
1400mA – LUXEON MX 6V
2800mA – LUXEON MX 3V

Part Number Nomenclature

Part numbers for LUXEON MX follow the convention below:

L 1 M X – **A A B B C C C D E E E E** 0

Where:

A A – designates CCT (40=4000K, 50=5000K, 57=5700K, 65=6500K)

B B – designates minimum CRI (70=70CRI, 80=80CRI, 90=90CRI)

C C C – designates voltage (12V=12V, 06V=6V, 03V=3V)

D – designates color (0=full distribution, 3=3-step, 5=5-step, 7=7-step)

E E E E – designates minimum luminous flux (optional)

Therefore, the following part number is used for a LUXEON MX 4000K 70CRI, 12V full distribution LED:

L 1 M X – **4 0 7 0 1 2 V 0 0 0 0 0** 0

Lumen Maintenance

Please contact your local Sales Representative or Lumileds Technical Solutions Manager for more information about the long-term performance of this product.

Environmental Compliance

Lumileds LLC is committed to providing environmentally friendly products to the solid-state lighting market. LUXEON MX is compliant to the European Union directives on the restriction of hazardous substances in electronic equipment, namely the RoHS Directive 2011/65/EU and REACH Regulation (EC) 1907/2006. Lumileds LLC will not intentionally add the following restricted materials to its products: lead, mercury, cadmium, hexavalent chromium, polybrominated biphenyls (PBB) or polybrominated diphenyl ethers (PBDE).

Performance Characteristics

Product Selection Guide

Table 1. Product performance of LUXEON MX at test current, T_j=85°C.

VOLTAGE	NOMINAL CCT	MINIMUM CRI [1, 2]	LUMINOUS FLUX [1] (lm)			TEST CURRENT (mA)	PART NUMBER
			MINIMUM	TYPICAL	TYPICAL T_j=25°C		
12V	2700K	70	970	1050	1095	700	L1MX-277012V000000
	3000K	70	1040	1161	1270	700	L1MX-307012V000000
	4000K	70	1160	1232	1345	700	L1MX-407012V000000
	5000K	70	1160	1232	1345	700	L1MX-507012V000000
	5700K	70	1160	1232	1345	700	L1MX-577012V000000
	6500K	70	1160	1232	1345	700	L1MX-657012V000000
	2700K	80	900	988	1095	700	L1MX-278012V000000
	3000K	80	970	1000	1110	700	L1MX-308012V000000
	4000K	80	1040	1115	1220	700	L1MX-408012V000000
	5000K	80	1040	1115	1220	700	L1MX-508012V000000
	2700K	90	730	800	872	700	L1MX-279012V000000
	3000K	90	730	835	910	700	L1MX-309012V000000
	4000K	90	900	965	1046	700	L1MX-409012V000000
	5700K	90	900	965	1046	700	L1MX-579012V000000
6V	2700K	70	970	1050	1095	1400	L1MX-277006V000000
	3000K	70	1040	1161	1270	1400	L1MX-307006V000000
	4000K	70	1160	1232	1345	1400	L1MX-407006V000000
	5000K	70	1160	1232	1345	1400	L1MX-507006V000000
	5700K	70	1160	1232	1345	1400	L1MX-577006V000000
	6500K	70	1160	1232	1345	1400	L1MX-657006V000000
	2700K	80	900	988	1095	1400	L1MX-278006V000000
	3000K	80	970	1000	1110	1400	L1MX-308006V000000
	4000K	80	1040	1115	1220	1400	L1MX-408006V000000
	5000K	80	1040	1115	1220	1400	L1MX-508006V000000
	2700K	90	730	800	872	1400	L1MX-279006V000000
	3000K	90	730	835	910	1400	L1MX-309006V000000
	4000K	90	900	965	1046	1400	L1MX-409006V000000
	5700K	90	900	965	1046	1400	L1MX-579006V000000
3V	2700K	70	970	1050	1095	1400	L1MX-277003V000000
	3000K	70	1040	1161	1270	1400	L1MX-307003V000000
	4000K	70	1160	1232	1345	2800	L1MX-407003V000000
	5000K	70	1160	1232	1345	2800	L1MX-507003V000000
	5700K	70	1160	1232	1345	2800	L1MX-577003V000000
	6500K	70	1160	1232	1345	2800	L1MX-657003V000000
	2700K	80	900	988	1095	2800	L1MX-278003V000000
	3000K	80	970	1000	1110	2800	L1MX-308003V000000
	4000K	80	1040	1115	1220	2800	L1MX-408003V000000
	5000K	80	1040	1115	1220	2800	L1MX-508003V000000
	2700K	90	730	800	872	2800	L1MX-279003V000000
	3000K	90	730	835	910	2800	L1MX-309003V000000
	4000K	90	900	965	1046	2800	L1MX-409003V000000
	5700K	90	900	965	1046	2800	L1MX-579003V000000

Notes for Table 1:
1. Lumileds maintains a tolerance of ±2 on CRI and ±6.5% on luminous flux measurements.
2. Typical CRI is approximately 2 points higher than the minimum CRI specified, but this is not guaranteed.

 ©2019 Lumileds Holding B.V. All rights reserved.

Optical Characteristics

Table 2. Optical characteristics for LUXEON MX at test current, T_j=85°C.

PART NUMBER	TYPICAL TOTAL INCLUDED ANGLE [1]	TYPICAL VIEWING ANGLE [2]
L1MX-xxxxxxxxxxx0	140°	120°

Notes for Table 2:
1. Total angle at which 90% of total luminous flux is captured.
2. Viewing angle is the off axis angle from the LED centerline where the luminous intensity is ½ of the peak value.

Electrical and Thermal Characteristics

Table 3. Electrical and thermal characteristics for LUXEON MX at test current, T_j=85°C.

PART NUMBER	FORWARD VOLTAGE [1] (V_f)			TYPICAL TEMPERATURE COEFFICIENT OF FORWARD VOLTAGE [2] (mV/°C)	TYPICAL THERMAL RESISTANCE—JUNCTION TO SOLDER PAD (°C/W)
	MINIMUM	TYPICAL	MAXIMUM		
L1MX-xxxx12Vxxxxx0	10.50	11.30	11.70	-5.50	1.25
L1MX-xxxx06Vxxxxx0	5.25	5.65	6.00	-2.75	1.25
L1MX-xxxx03Vxxxxx0	2.63	2.83	3.00	-1.38	1.25

Notes for Table 3:
1. Lumileds maintains a tolerance of ±0.06V on forward voltage measurements.
2. Measured between 25°C and 135°C.

Absolute Maximum Ratings

Table 4. Absolute maximum ratings for LUXEON MX.

PARAMETER	MAXIMUM PERFORMANCE
DC Forward Current [1, 2]	1500mA for L1MX-xxxx12Vxxxxx0 3000mA for L1MX-xxxx06Vxxxxx0 6000mA for L1MX-xxxx03Vxxxxx0
Peak Pulsed Forward Current [1, 3]	1750mA for L1MX-xxxx12Vxxxxx0 3500mA for L1MX-xxxx06Vxxxxx0 7000mA for L1MX-xxxx03Vxxxxx0
LED Junction Temperature [1] (DC & Pulse)	135°C
ESD Sensitivity (ANSI/ESDA/JEDEC JS-001-2012)	Class 3B
Operating Case Temperature [1]	-40°C to 120°C at 700mA for L1MX-xxxxxxxxxxx0
LED Storage Temperature	-40°C to 120°C
Soldering Temperature	JEDEC 020D 250°C
Allowable Reflow Cycles	3
Reverse Voltage ($V_{reverse}$)	LUXEON LEDs are not designed to be driven in reverse bias

Notes for Table 4:
1. Proper current derating must be observed to maintain the junction temperature below the maximum allowable junction temperature.
2. Residual periodic variations due to power conversion from alternating current (AC) to direct current (DC), also called "ripple," are acceptable if the following conditions are met:
   – The frequency of the ripple current is 100Hz or higher
   – The average current for each cycle does not exceed the maximum allowable DC forward current
   – The maximum amplitude of the ripple does not exceed the maximum peak pulsed forward current
3. At 10% duty cycle with pulse width of 10ms.

 ©2019 Lumileds Holding B.V. All rights reserved.

Operating Conditions

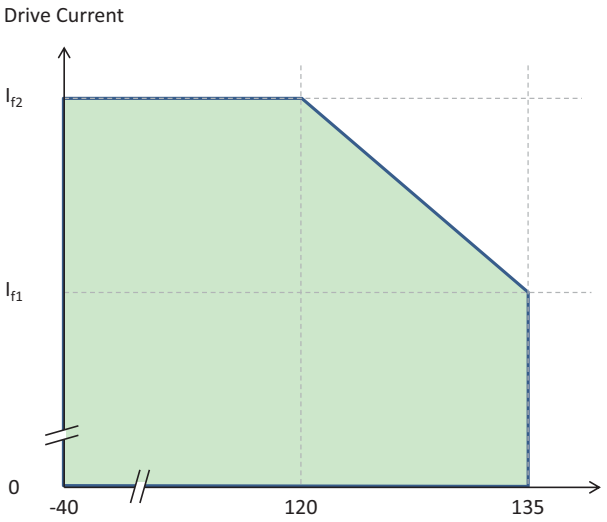

	I_{f1} [mA]	I_{f2} [mA]
LUXEON MX 3V	4800	6000
LUXEON MX 6V	2400	3000
LUXEON MX 12V	1200	1500

Figure 1. Maximum permissible operating conditions for LUXEON MX.

Notes for Figure 1:
1. The shaded area in this graph reflects the maximum permissible operating conditions for LUXEON MX.

Characteristic Curves

Spectral Power Distribution Characteristics

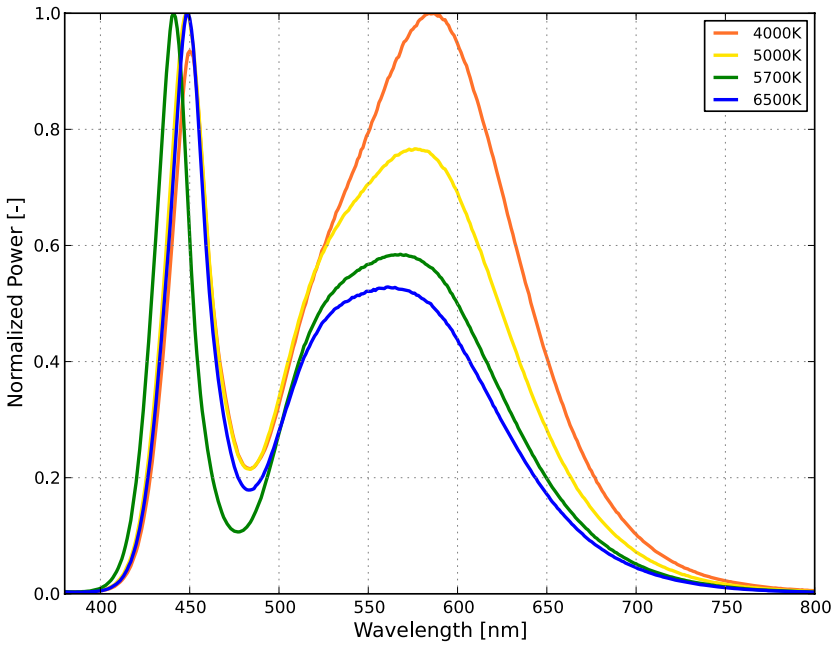

Figure 2. Typical normalized power vs. wavelength for L1MX-xx70xxxxxxxx0 at test current, T_j=85°C.

 ©2019 Lumileds Holding B.V. All rights reserved.

Light Output Characteristics

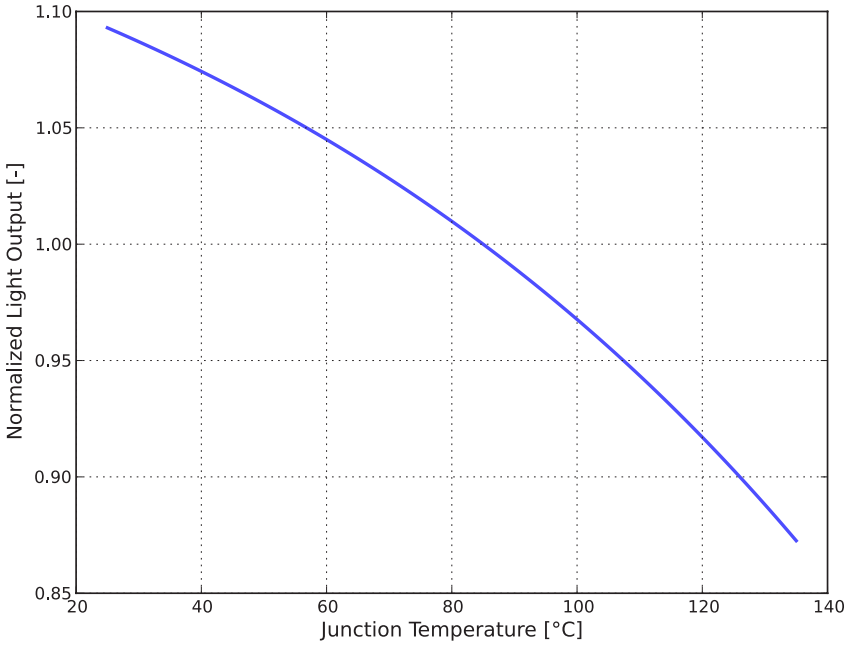

Figure 3. Typical normalized light output vs. junction temperature for L1MX-xxxxxxxxxxx0 at test current.

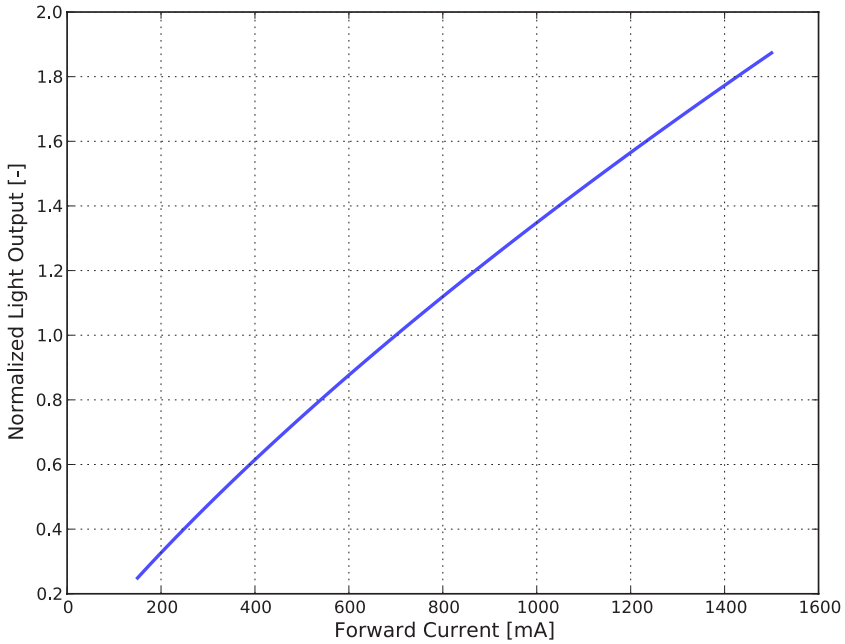

Figure 4a. Typical normalized light output vs. forward current for L1MX-xxxx12Vxxxxx0 at T_j=85°C.

 ©2019 Lumileds Holding B.V. All rights reserved.

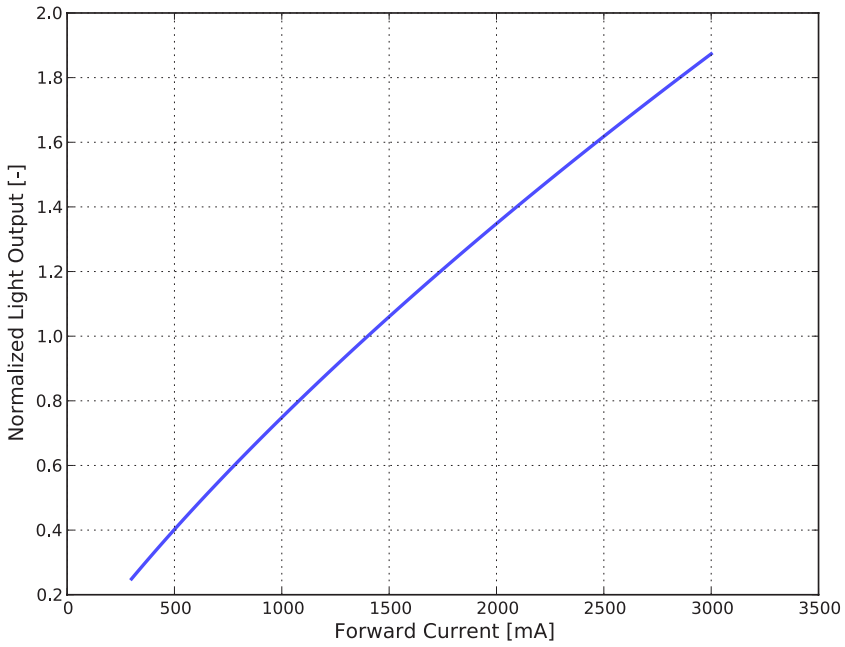

Figure 4b. Typical normalized light output vs. forward current for L1MX-xxxx06Vxxxxx0 at T_j=85°C.

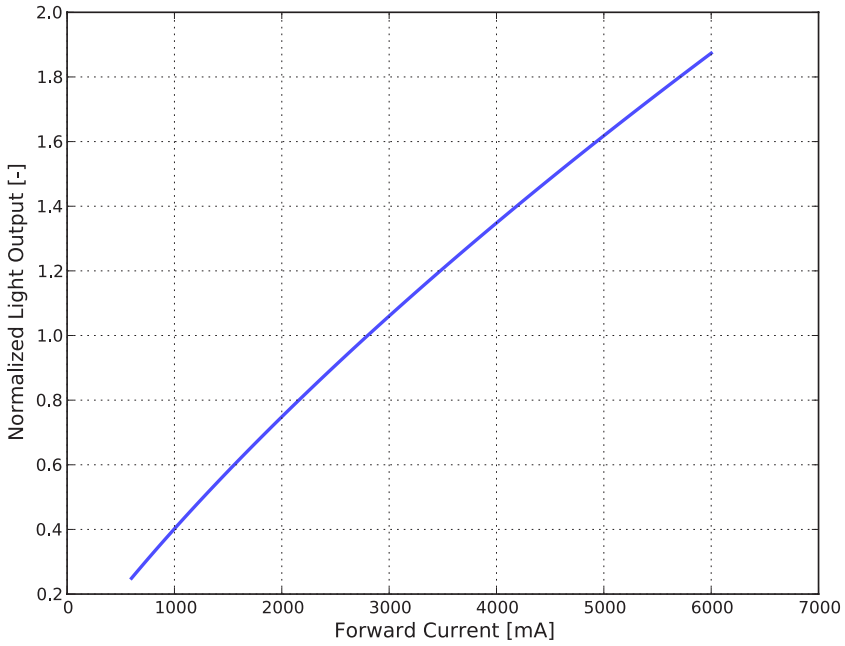

Figure 4c. Typical normalized light output vs. forward current for L1MX-xxxx03Vxxxxx0 at T_j=85°C.

 ©2019 Lumileds Holding B.V. All rights reserved.

Forward Current Characteristics

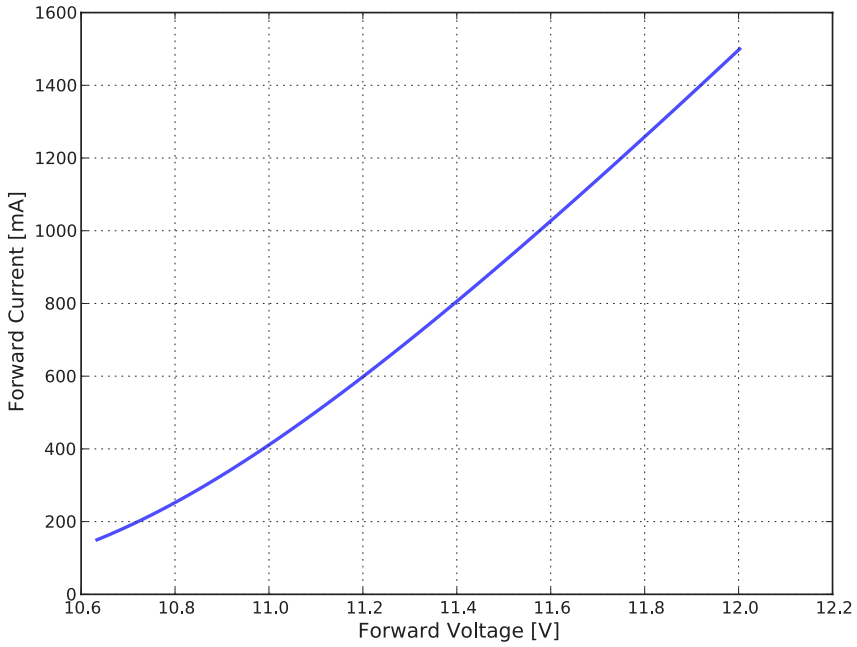

Figure 5a. Typical forward current vs. forward voltage for L1MX-xxxx12Vxxxxx0 at T_j=85°C.

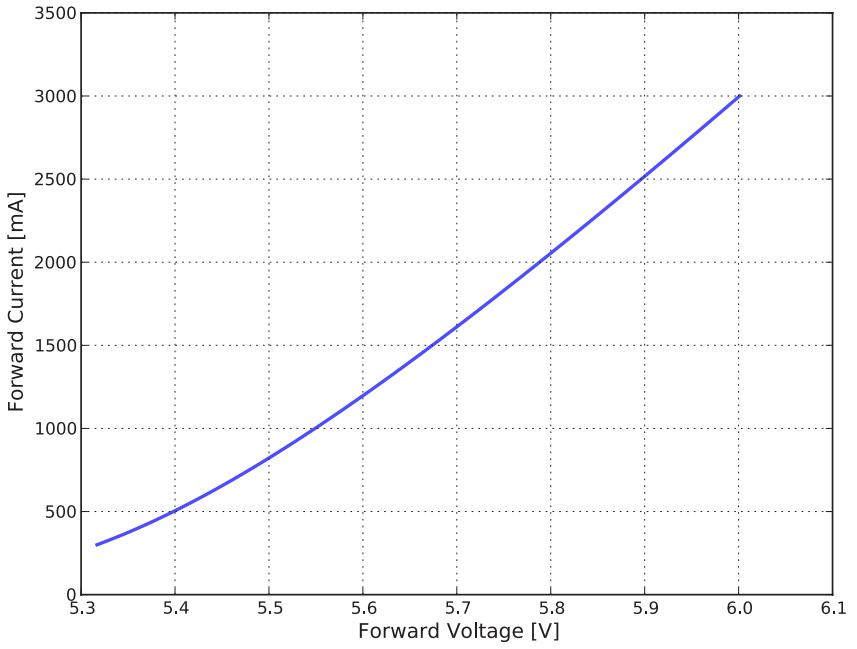

Figure 5b. Typical forward current vs. forward voltage for L1MX-xxxx06Vxxxxx0 at T_j=85°C.

 ©2019 Lumileds Holding B.V. All rights reserved.

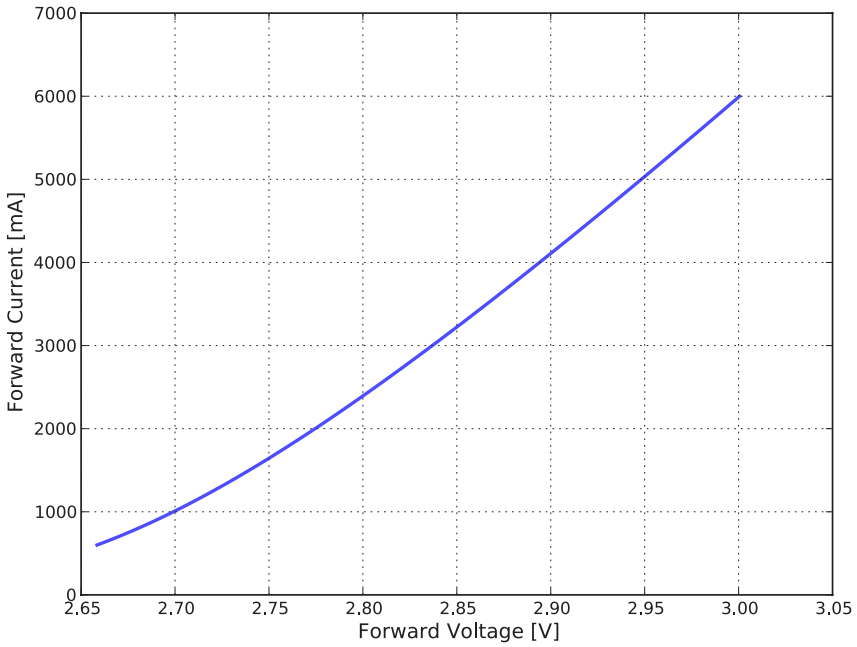

Figure 5c. Typical forward current vs. forward voltage for L1MX-xxxx03Vxxxxx0 at T_j=85°C.

 ©2019 Lumileds Holding B.V. All rights reserved.

Radiation Pattern Characteristics

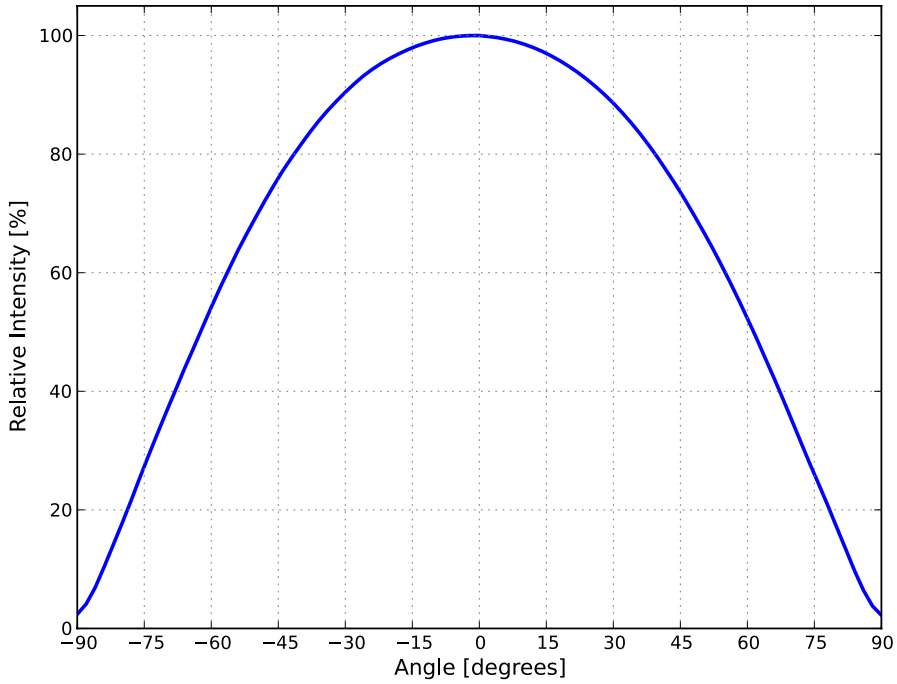

Figure 6. Typical radiation pattern for L1MX-xxxxxxxxxxxx0 at test current, T_j=85°C.

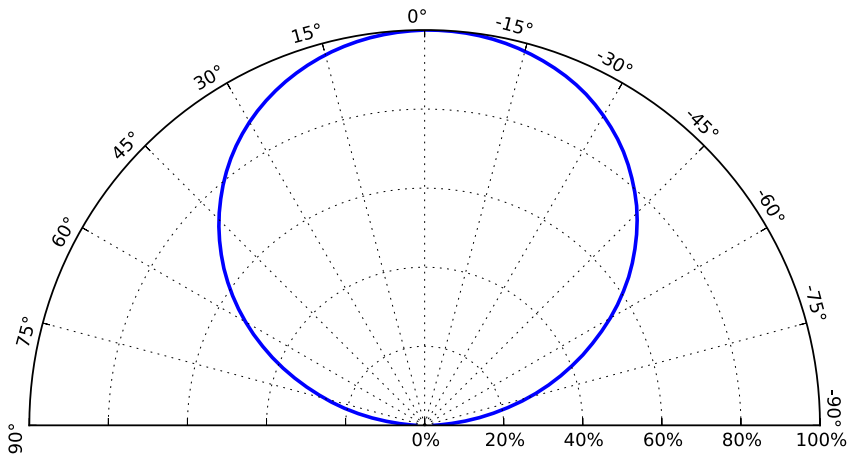

Figure 7. Typical polar radiation pattern for L1MX-xxxxxxxxxxxx0 at test current, T_j=85°C.

 ©2019 Lumileds Holding B.V. All rights reserved.

Product Bin and Labeling Definitions

Decoding Product Bin Labeling

In the manufacturing of semiconductor products, there are variations in performance around the average values given in the technical datasheet. For this reason, Lumileds bins LED components for luminous flux or radiometric power, color point, peak or dominant wavelength and forward voltage.

LUXEON MX LEDs are labeled using a 4-digit alphanumeric CAT code following the format below:

A B C D

Where:

- **A** – designates luminous flux bin (example: M=630 to 680 lumens, T=970 to 1040 lumens)
- **B** – designates correlated color temperature (CCT) bin (example: 1=6500K, 2=5700K, 3=5000K, 5=4000K)
- **C** – designates color bin (example: 3=3-step, 5=5-step, 7=7-step)
- **D** – designates forward voltage bin (example: F=10.50 to 11.00V, G=11.00 to 11.50V)

Therefore, a LUXEON MX 12V with a lumen range of 630 to 680, color bin of 4000K, 5-step MacAdam ellipse and a forward voltage range of 10.50 to 11.00V has the following CAT code:

M 5 5 F

Luminous Flux Bins

Table 5 lists the standard luminous flux bins for LUXEON MX emitters. Although several bins are outlined, product availability in a particular bin varies by production run and by product performance. Not all bins are available in all CCTs.

Table 5. Luminous flux bin definitions for LUXEON MX, T_j=85°C.

BIN	LUMINOUS FLUX [1] (lm)	
	MINIMUM	MAXIMUM
J	510	550
K	550	590
L	590	630
M	630	680
N	680	730
P	730	780
Q	780	840
R	840	900
S	900	970
T	970	1040
U	1040	1120
V	1120	1200
W	1200	1240
X	1240	1280
Y	1280	1320

Notes for Table 5:
1. Lumileds maintains a tolerance of ±6.5% on luminous flux measurements.

 ©2019 Lumileds Holding B.V. All rights reserved.

Color Bin Definitions

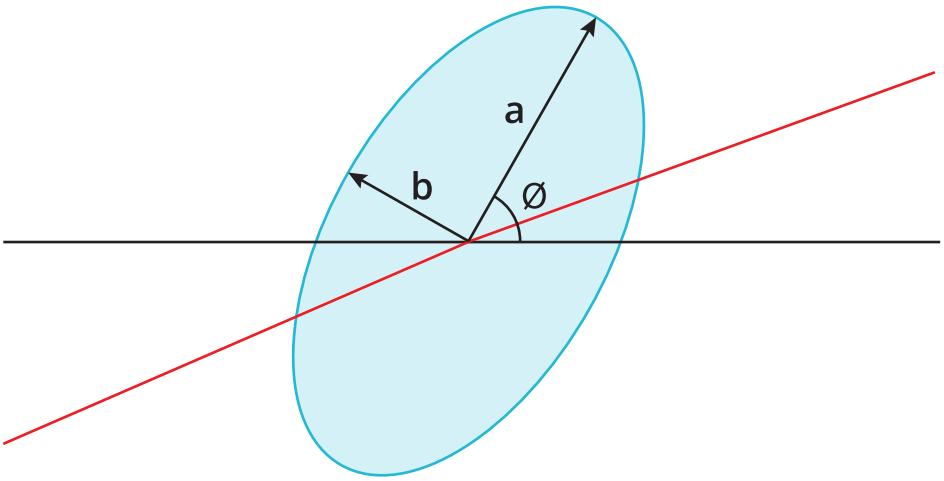

Figure 8. 3-, 5- and 7-step MacAdam ellipse illustration for Table 6.

Table 6. 3-, 5- and 7-step MacAdam ellipse color bin definitions for LUXEON MX, T_j=85°C.

NOMINAL CCT	COLOR SPACE	CENTER POINT [1] (cx, cy)	MAJOR AXIS, a	MINOR AXIS, b	ELLIPSE ROTATION ANGLE, θ
2700K	Single 3-step MacAdam ellipse	0.4578, 0.4101	0.00810	0.00420	53.70°
3000K	Single 3-step MacAdam ellipse	0.4338, 0.4030	0.00834	0.00408	53.22°
4000K	Single 3-step MacAdam ellipse	0.3818, 0.3797	0.00939	0.00402	53.72°
5000K	Single 3-step MacAdam ellipse	0.3447, 0.3553	0.00822	0.00354	59.62°
2700K	Single 5-step MacAdam ellipse	0.4578, 0.4101	0.01350	0.00700	53.70°
3000K	Single 5-step MacAdam ellipse	0.4338, 0.4030	0.01390	0.00680	53.22°
4000K	Single 5-step MacAdam ellipse	0.3818, 0.3797	0.01565	0.00670	53.72°
5000K	Single 5-step MacAdam ellipse	0.3447, 0.3553	0.01370	0.00590	59.62°
5700K	Single 5-step MacAdam ellipse	0.3287, 0.3417	0.01243	0.00533	59.09°
6500K	Single 5-step MacAdam ellipse	0.3123, 0.3282	0.01115	0.00475	58.57°
6500K	Single 7-step MacAdam ellipse	0.3123, 0.3282	0.01561	0.00665	58.57°

Notes for Table 6:
1. Lumileds maintains a tolerance of ±0.005 on x and y coordinates in the CIE 1931 color space.

Correlated Color Temperature Bins

Table 7. Correlated color temperature bin definitions for LUXEON MX.

BIN	CCT
1	6500K
2	5700K
3	5000K
5	4000K
7	3000K
8	2700K

 ©2019 Lumileds Holding B.V. All rights reserved.

Forward Voltage Bins

Table 8. Forward voltage bin definitions for LUXEON MX, T_j=85°C.

PART NUMBER	BIN	FORWARD VOLTAGE [1] (V_f)	
		MINIMUM	MAXIMUM
L1MX-xxxx12Vxxxxx0	F	10.50	11.00
	G	11.00	11.50
	H	11.50	11.70
L1MX-xxxx06Vxxxxx0	F	5.25	5.50
	G	5.50	5.75
	H	5.75	6.00
L1MX-xxxx03Vxxxxx0	F	2.63	2.75
	G	2.75	2.88
	H	2.88	3.00

Notes for Table 8:
1. Lumileds maintains a tolerance of ±0.06V on forward voltage measurements.

Mechanical Dimensions

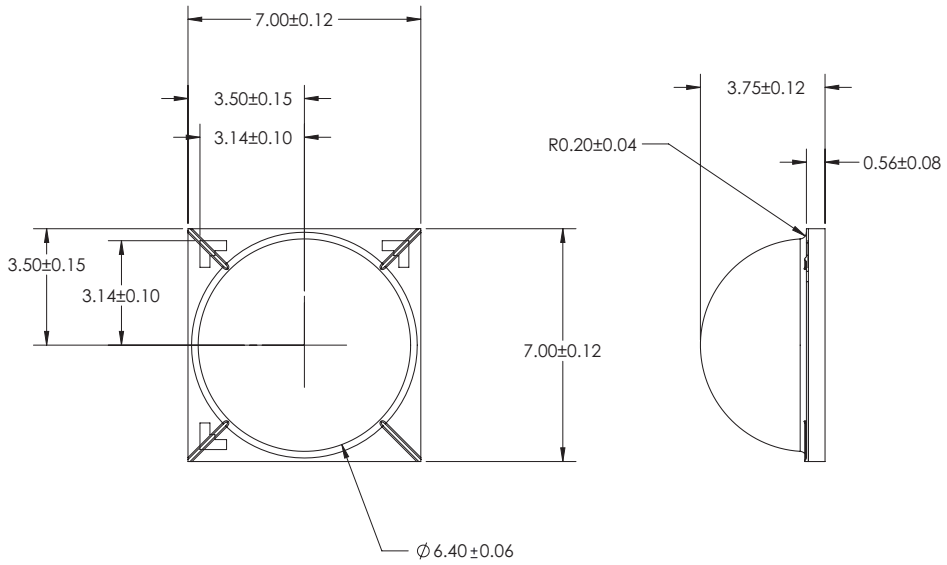

Figure 9. Mechanical dimensions for LUXEON MX.

Notes for Figure 9:
1. Drawings are not to scale.
2. All dimensions are in millimeters.

 ©2019 Lumileds Holding B.V. All rights reserved.

Reflow Soldering Guidelines

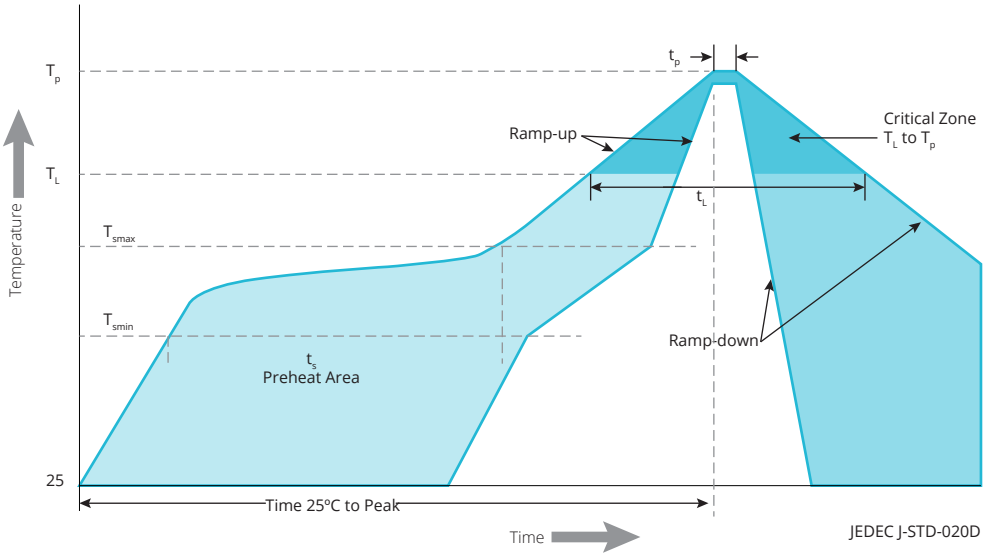

Figure 10. Visualization of the acceptable reflow temperature profile as specified in Table 9.

Table 9. Reflow profile characteristics for LUXEON MX.

PROFILE FEATURE	LEAD-FREE ASSEMBLY
Preheat Minimum Temperature (T_{smin})	150°C
Preheat Maximum Temperature (T_{smax})	200°C
Preheat Time (t_{smin} to t_{smax})	60 to 120 seconds
Ramp-Up Rate (T_L to T_p)	3°C / second maximum
Liquidus Temperature (T_L)	217°C
Time Maintained Above Temperature T_L (t_L)	60 to 150 seconds
Peak / Classification Temperature (T_p)	250°C
Time Within 5°C of Actual Temperature (t_p)	20 to 40 seconds
Ramp-Down Rate (T_p to T_L)	6°C / second maximum
Time 25°C to Peak Temperature	8 minutes maximum

JEDEC Moisture Sensitivity

Table 10. Moisture sensitivity levels for LUXEON MX.

LEVEL	FLOOR LIFE		SOAK REQUIREMENTS STANDARD	
	TIME	CONDITIONS	TIME	CONDITIONS
1	Unlimited	≤30°C / 85% RH	168 Hours +5 / -0	85°C / 85% RH

 ©2019 Lumileds Holding B.V. All rights reserved.

Solder Pad Design

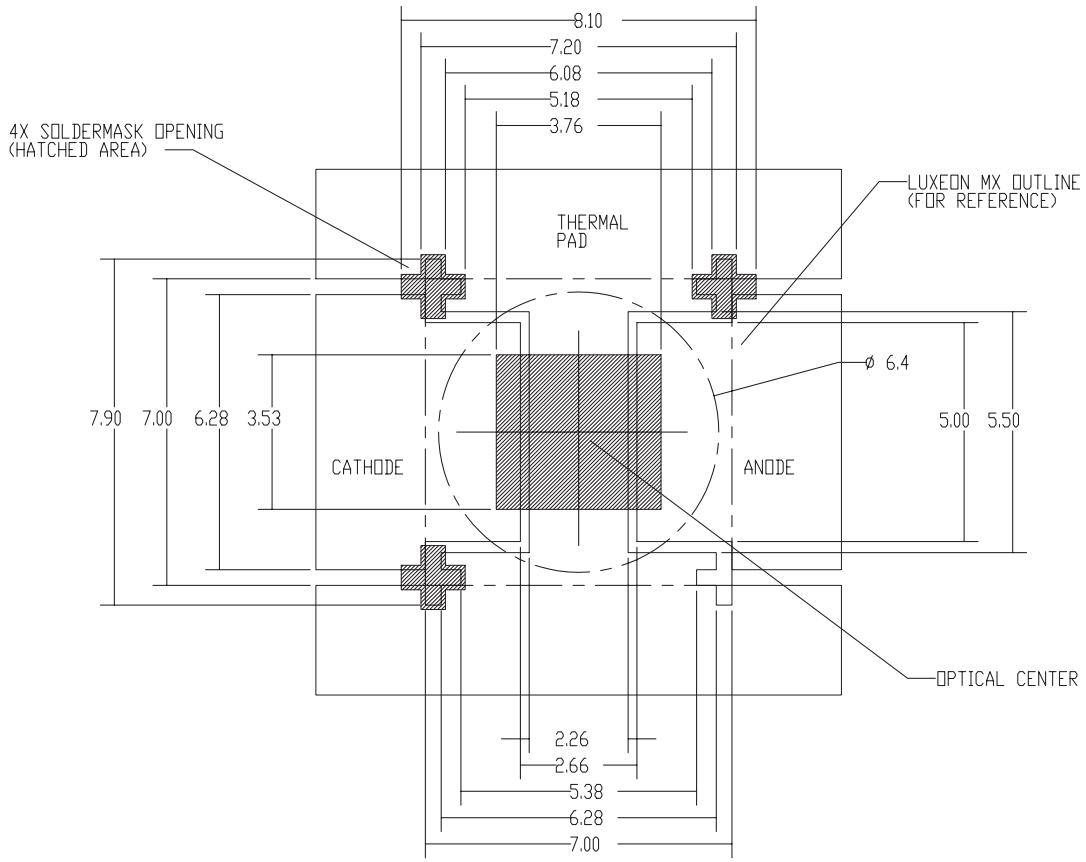

Figure 11. Recommended PCB solder pad layout for LUXEON MX.

Notes for Figure 11:
1. Drawings are not to scale.
2. All dimensions are in millimeters.

Packaging Information

Pocket Tape Dimensions

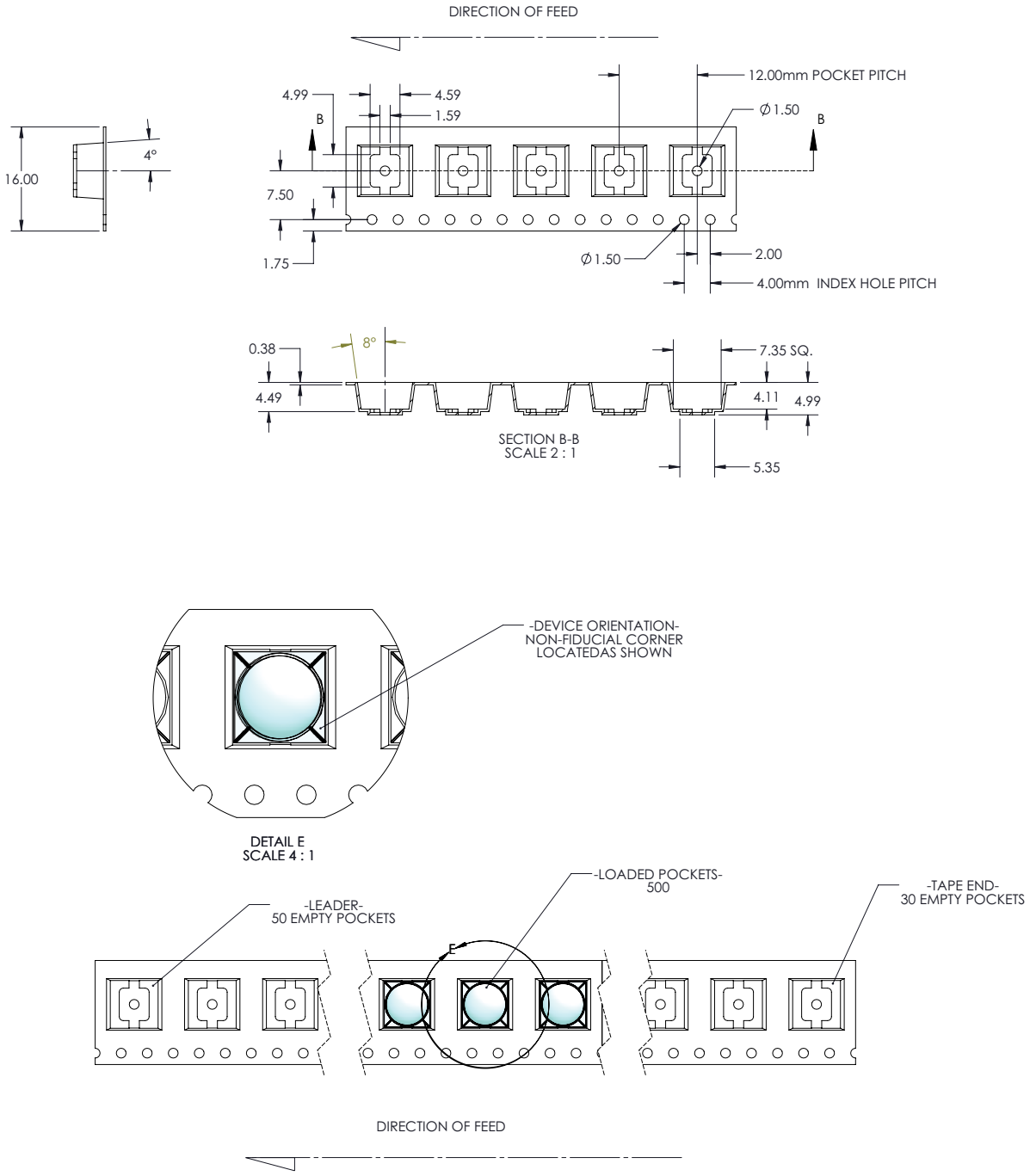

Figure 12. Pocket tape dimensions for LUXEON MX.

Notes for Figure 12:
1. Drawings are not to scale.
2. All dimensions are in millimeters.

 ©2019 Lumileds Holding B.V. All rights reserved.

Reel Dimensions

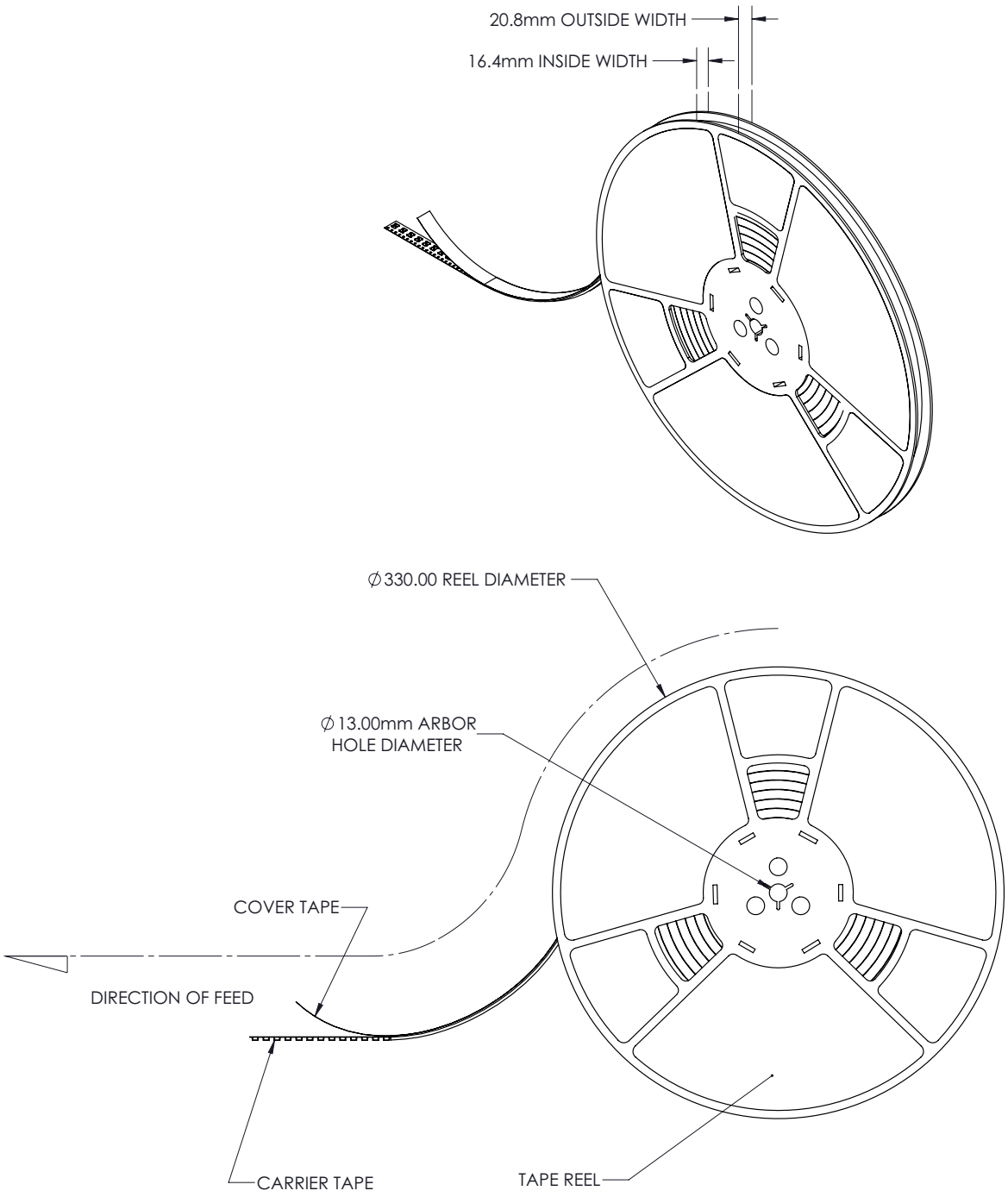

Figure 13. Reel dimensions for LUXEON MX.

Notes for Figure 13:
1. Drawings are not to scale.
2. All dimensions are in millimeters.

About Lumileds

Companies developing automotive, mobile, IoT and illumination lighting applications need a partner who can collaborate with them to push the boundaries of light. With over 100 years of inventions and industry firsts, Lumileds is a global lighting solutions company that helps customers around the world deliver differentiated solutions to gain and maintain a competitive edge. As the inventor of Xenon technology, a pioneer in halogen lighting and the leader in high performance LEDs, Lumileds builds innovation, quality and reliability into its technology, products and every customer engagement. Together with its customers, Lumileds is making the world better, safer, more beautiful—with light.

To learn more about our lighting solutions, visit lumileds.com.

LUMILEDS

©2019 Lumileds Holding B.V. All rights reserved.
LUXEON is a registered trademark of the Lumileds Holding B.V. in the United States and other countries.

lumileds.com

Neither Lumileds Holding B.V. nor its affiliates shall be liable for any kind of loss of data or any other damages, direct, indirect or consequential, resulting from the use of the provided information and data. Although Lumileds Holding B.V. and/or its affiliates have attempted to provide the most accurate information and data, the materials and services information and data are provided "as is," and neither Lumileds Holding B.V. nor its affiliates warrants or guarantees the contents and correctness of the provided information and data. Lumileds Holding B.V. and its affiliates reserve the right to make changes without notice. You as user agree to this disclaimer and user agreement with the download or use of the provided materials, information and data. A listing of Lumileds product/patent coverage may be accessed at lumileds.com/patents.

DS179 LUXEON MX
Prod 20190220