

LUXEON CoB Core Range – High Density

Double the flux in the same form factor



LUXEON CoB Core Range – High Density focuses on achieving the highest Center Beam Candle Power (CBCP). With a focus on 6, 9 and 11mm Light Emitting Surfaces, we can cover a flux range as high as 8,000 lumens. Using the mechanical dimensions of our LUXEON CoB Core Range, the High Density range will also benefit from the ability to utilize existing an ecosystem of holders, optics and drivers.

FEATURES AND BENEFITS

- Highest flux densities with industry's smallest LES
- 3-step MacAdam ellipse color definition: *Freedom from Binning* for color consistency from luminaire to luminaire
- Up to 4x lower thermal resistance than competition, enabling smaller heatsinks and higher lumens
- Supported by a comprehensive optical, mechanical and electrical ecosystem

PRIMARY APPLICATIONS

- Spotlights
- Track Lights
- Downlights

DS189 LUXEON CoB Core Range – High Density Product Datasheet ©2022 Lumileds Holding B.V. All rights reserved.

Table of Contents

General Product Information 2
- Product Test Conditions 2
- Part Number Nomenclature 2
- Lumen Maintenance 2
- Environmental Compliance 2

Performance Characteristics 3
- Product Selection Guide 3
- Optical Characteristics 4
- Electrical and Thermal Characteristics 4

Absolute Maximum Ratings 5

Characteristic Curves 6
- Spectral Power Distribution Characteristics 6
- Light Output Characteristics 6
- Forward Current Characteristics 8
- Radiation Pattern Characteristics 9

Color Bin Definitions 10

Mechanical Dimensions 11

Packaging Information 12
- Tube Dimensions 12

 ©2022 Lumileds Holding B.V. All rights reserved.

General Product Information

Product Test Conditions

LUXEON CoB Core Range – High Density LEDs are tested and binned with a DC drive current specified below at a junction temperature, T_J, of 85°C:

350mA – LUXEON CoB 1202HD
700mA – LUXEON CoB 1204HD
900mA – LUXEON CoB 1205HD

Part Number Nomenclature

Part numbers for LUXEON CoB Core Range – High Density follow the convention below:

L 2 C 5 – **A A B B C C C C** E **D D F F**

Where:

A A – designates nominal CCT (22=2200K, 27=2700K, 30=3000K, 35=3500K, 40=4000K, 50=5000K, 57=5700K, 65=6500K)

B B – designates minimum CRI (70=70CRI, 80=80CRI, 90=90CRI)

C C C C – designates product configuration (1202, 1204, 1205)

D D – designates light emitting surface (LES) size (H6=6mm, 09=9mm, 11=11mm)

F F – designates options for product specification

Therefore, the following part number is used for a LUXEON CoB 1204, 3000K 80CRI, with a 9mm LES:

L 2 C 5 – **3 0 8 0 1 2 0 4** E **0 9** 0 0

Lumen Maintenance

Please contact your local Sales Representative or Lumileds Technical Solutions Manager for more information about the long-term performance of this product.

Environmental Compliance

Lumileds LLC is committed to providing environmentally friendly products to the solid-state lighting market. LUXEON CoB Core Range – High Density is compliant to the European Union directives on the restriction of hazardous substances in electronic equipment, namely the RoHS Directive 2011/65/EU and REACH Regulation (EC) 1907/2006. Lumileds LLC will not intentionally add the following restricted materials to its products: lead, mercury, cadmium, hexavalent chromium, polybrominated biphenyls (PBB) or polybrominated diphenyl ethers (PBDE).

 ©2022 Lumileds Holding B.V. All rights reserved.

Performance Characteristics

Product Selection Guide

Table 1. Product performance of LUXEON CoB Core Range – High Density at specified test current, T_j=85°C.

PRODUCT	NOMINAL CCT	MINIMUM CRI [1, 2, 3]	LUMINOUS FLUX [1] (lm)		TYPICAL LUMINOUS EFFICACY (lm/W)	TEST CURRENT (mA)	LES [4] (mm)	ENERGY EFFICIENCY CLASS [5]	PART NUMBER
			MINIMUM	TYPICAL					
LUXEON CoB 1202HD	4000K	70	1505	1673	129	350	6	Note 6	L2C5-40701202EH600
	5000K	70	1505	1673	129	350	6	Note 6	L2C5-50701202EH600
	2700K	80	1240	1378	106	350	6	F	L2C5-27801202EH600
	3000K	80	1368	1520	117	350	6	F	L2C5-30801202EH600
	3500K	80	1406	1562	121	350	6	E	L2C5-35801202EH600
	4000K	80	1438	1598	123	350	6	E	L2C5-40801202EH600
	5000K	80	1425	1583	122	350	6	E	L2C5-50801202EH600
	5700K	80	1432	1591	123	350	6	E	L2C5-57801202EH600
	2700K	90	1134	1260	97	350	6	Note 6	L2C5-27901202EH600
	3000K	90	1211	1345	104	350	6	F	L2C5-30901202EH600
	3500K	90	1223	1359	105	350	6	F	L2C5-35901202EH600
	4000K	90	1218	1353	104	350	6	F	L2C5-40901202EH600
LUXEON CoB 1204HD	3000K	70	2887	3207	124	700	9	Note 6	L2C5-30701204E0900
	3500K	70	2800	3111	120	700	9	Note 6	L2C5-35701204E0900
	4000K	70	3011	3345	129	700	9	Note 6	L2C5-40701204E0900
	5000K	70	3011	3345	129	700	9	Note 6	L2C5-50701204E0900
	5700K	70	2866	3185	123	700	9	Note 6	L2C5-57701204E0900
	6500K	70	2824	3137	121	700	9	Note 6	L2C5-65701204E0900
	2200K	80	2140	2378	92	700	9	Note 6	L2C5-22801204E0900
	2700K	80	2554	2838	110	700	9	Note 6	L2C5-27801204E0900
	3000K	80	2688	2987	115	700	9	F	L2C5-30801204E0900
	3500K	80	2742	3047	118	700	9	F	L2C5-35801204E0900
	4000K	80	2850	3167	122	700	9	E	L2C5-40801204E0900
	5000K	80	2850	3167	122	700	9	E	L2C5-50801204E0900
	5700K	80	2891	3212	124	700	9	E	L2C5-57801204E0900
	2200K	90	1864	2071	80	700	9	Note 6	L2C5-22901204E0900
	2700K	90	2187	2430	94	700	9	Note 6	L2C5-27901204E0900
	3000K	90	2306	2562	99	700	9	Note 6	L2C5-30901204E0900
	3200K	90	2340	2600	100	700	9	Note 6	L2C5-32901204E0900
	3500K	90	2520	2800	108	700	9	F	L2C5-35901204E0900
	4000K	90	2551	2834	109	700	9	F	L2C5-40901204E0900

Notes for Table 1:
1. Lumileds maintains a tolerance of ±2 on CRI and ±6.5% on luminous flux measurements.
2. Typical CRI is approximately 2 points higher than the minimum CRI specified, but this is not guaranteed.
3. R9 value of 90CRI products are >50.
4. Light Emitting Surface (LES) is the inner diameter (phosphor area) inside the dam.
5. Energy efficiency class as specified in Commission Delegated Regulation (EU) 2019/2015. The available range of energy efficiency classes is A-G.
6. Exception: Not available in EU or UK.

 ©2022 Lumileds Holding B.V. All rights reserved.

Table 1. Product performance of LUXEON CoB Core Range – High Density at specified test current, T_j=85°C, Continued.

PRODUCT	NOMINAL CCT	MINIMUM CRI [1, 2, 3]	LUMINOUS FLUX [1] (lm)		TYPICAL LUMINOUS EFFICACY (lm/W)	TEST CURRENT (mA)	LES [4] (mm)	ENERGY EFFICIENCY CLASS [5]	PART NUMBER
			MINIMUM	TYPICAL					
LUXEON CoB 1205HD	4000K	70	3780	4200	126	900	11	Note 6	L2C5-40701205E1100
	5000K	70	3780	4200	126	900	11	Note 6	L2C5-50701205E1100
	2700K	80	3306	3673	110	900	11	Note 6	L2C5-27801205E1100
	3000K	80	3463	3848	116	900	11	Note 6	L2C5-30801205E1100
	3500K	80	3546	3940	118	900	11	Note 6	L2C5-35801205E1100
	4000K	80	3650	4056	122	900	11	Note 6	L2C5-40801205E1100
	5000K	80	3545	3939	118	900	11	Note 6	L2C5-50801205E1100
	5700K	80	3703	4114	124	900	11	Note 6	L2C5-57801205E1100
	2700K	90	2763	3070	92	900	11	Note 6	L2C5-27901205E1100
	3000K	90	2925	3250	98	900	11	Note 6	L2C5-30901205E1100
	4000K	90	3176	3529	106	900	11	Note 6	L2C5-40901205E1100

Notes for Table 1:
1. Lumileds maintains a tolerance of ±2 on CRI and ±6.5% on luminous flux measurements.
2. Typical CRI is approximately 2 points higher than the minimum CRI specified, but this is not guaranteed.
3. R9 value of 90CRI products are >50.
4. Light Emitting Surface (LES) is the inner diameter (phosphor area) inside the dam.
5. Energy efficiency class as specified in Commission Delegated Regulation (EU) 2019/2015. The available range of energy efficiency classes is A-G.
6. Exception: Not available in EU or UK.

Optical Characteristics

Table 2. Optical characteristics for LUXEON CoB Core Range – High Density at specified test current, T_j=85°C.

PART NUMBER	TYPICAL TOTAL INCLUDED ANGLE [1]	TYPICAL VIEWING ANGLE [2]
L2C5-xxxx12xxExx00	135°	115°

Notes for Table 2:
1. Total angle at which 90% of total luminous flux is captured.
2. Viewing angle is the off axis angle from the LED centerline where the luminous intensity is ½ of the peak value.

Electrical and Thermal Characteristics

Table 3. Electrical and thermal characteristics for LUXEON CoB Core Range – High Density at specified test current, T_j=85°C.

PART NUMBER	FORWARD VOLTAGE [1] (V_f)			TYPICAL TEMPERATURE COEFFICIENT OF FORWARD VOLTAGE [2] (mV/°C)	TYPICAL THERMAL RESISTANCE—JUNCTION TO CASE [3] (°C/W)
	MINIMUM	TYPICAL	MAXIMUM		
L2C5-xxxx1202EH600	34.5	37.0	39.5	-16	0.98
L2C5-xxxx1204E0900	34.5	37.0	39.5	-16	0.55
L2C5-xxxx1205E1100	34.5	37.0	39.5	-16	0.51

Notes for Table 3:
1. Lumileds maintains a tolerance of ±2% on forward voltage measurements.
2. Measured between 25°C and 85°C.
3. Thermal resistance is measured between junction and the bottom of the LUXEON CoB substrate.

 ©2022 Lumileds Holding B.V. All rights reserved.

Absolute Maximum Ratings

Table 4. Absolute maximum ratings for LUXEON CoB Core Range – High Density.

PARAMETER	MAXIMUM PERFORMANCE
DC Forward Current [1, 2]	700mA (1202HD), 1350mA (1204HD), 1650mA (1205HD)
LED Junction Temperature [1] (DC & Pulse)	150°C
ESD Sensitivity (ANSI/ESDA/JEDEC JS-001-2012)	Class 3B
Operating Case Temperature [1]	-40°C to 105°C
LED Storage Temperature	-40°C to 120°C
Allowable Reflow Cycles	3
Reverse Voltage ($V_{reverse}$)	LUXEON LEDs are not designed to be driven in reverse bias

Notes for Table 4:
1. Proper current derating must be observed to maintain the junction temperature below the maximum allowable junction temperature.
2. Residual periodic variations due to power conversion from alternating current (AC) to direct current (DC), also called "ripple," are acceptable if the following conditions are met:
   – The frequency of the ripple current is 100Hz or higher
   – The average current for each cycle does not exceed the maximum allowable DC forward current
   – The maximum amplitude of the ripple does not exceed the maximum peak pulsed forward current

 ©2022 Lumileds Holding B.V. All rights reserved.

Characteristic Curves

Spectral Power Distribution Characteristics

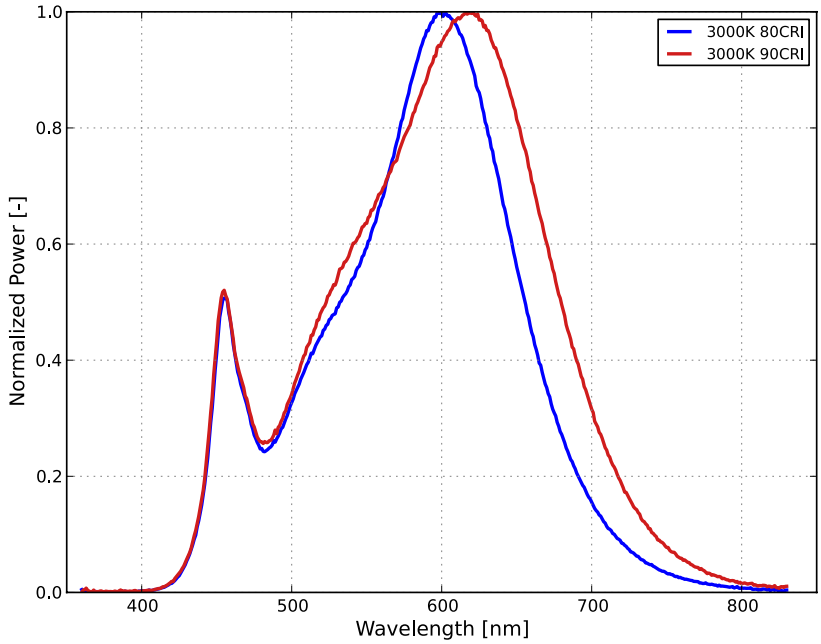

Figure 1. Typical normalized power vs. wavelength for L2C5-xxxx12xxExx00 at specified test current, T_j=85°C.

Light Output Characteristics

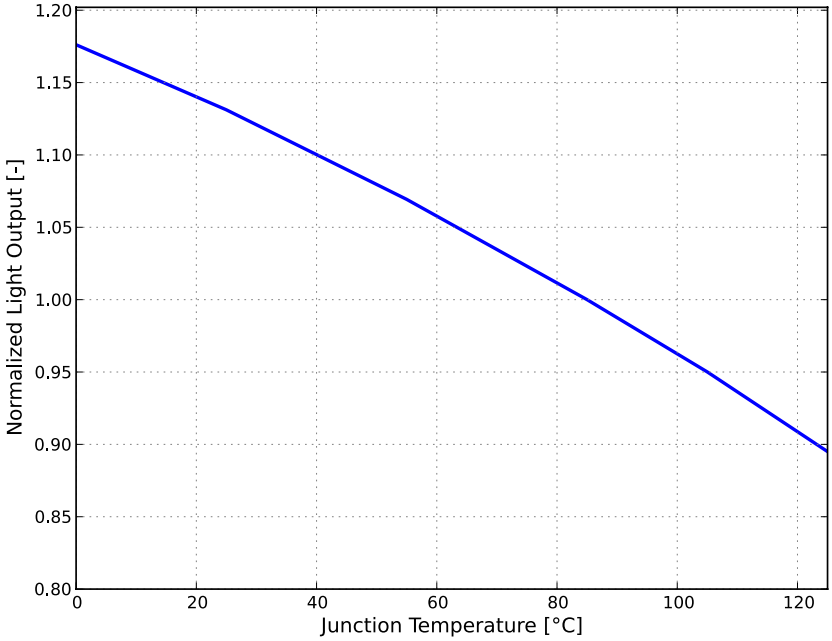

Figure 2. Typical normalized light output vs. junction temperature for L2C5-xxxx12xxExx00 at specified test current.

 ©2022 Lumileds Holding B.V. All rights reserved.

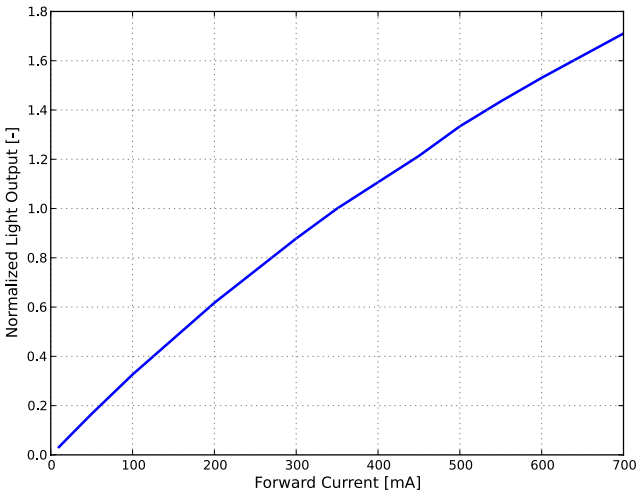

L2C5-xxxx1202EH600

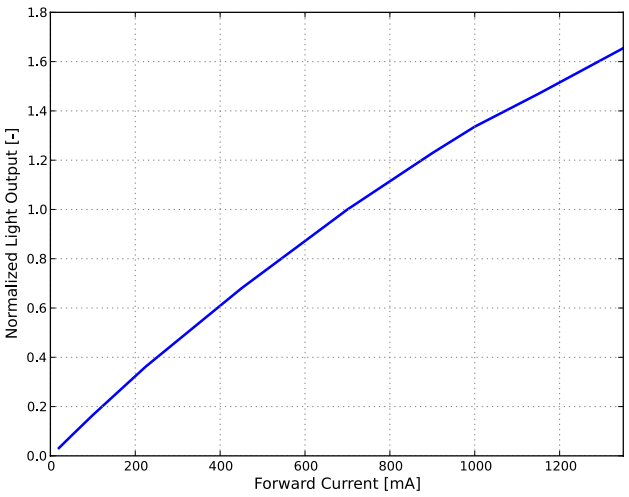

L2C5-xxxx1204E0900

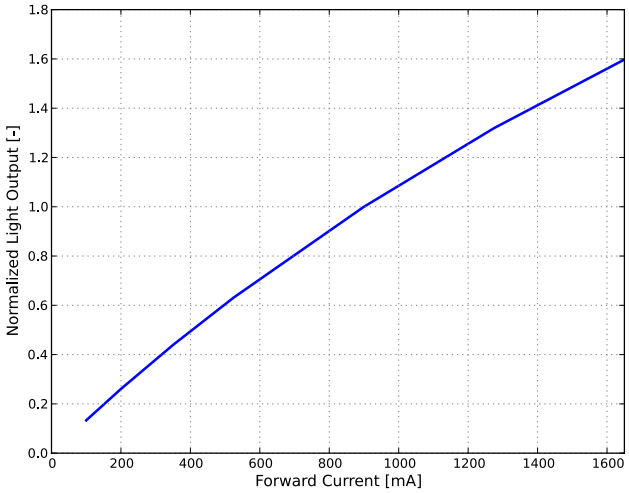

L2C5-xxxx1205E1100

Figure 3. Typical normalized light output vs. forward current for LUXEON CoB Core Range – High Density at T_j=85°C.

 ©2022 Lumileds Holding B.V. All rights reserved.

Forward Current Characteristics

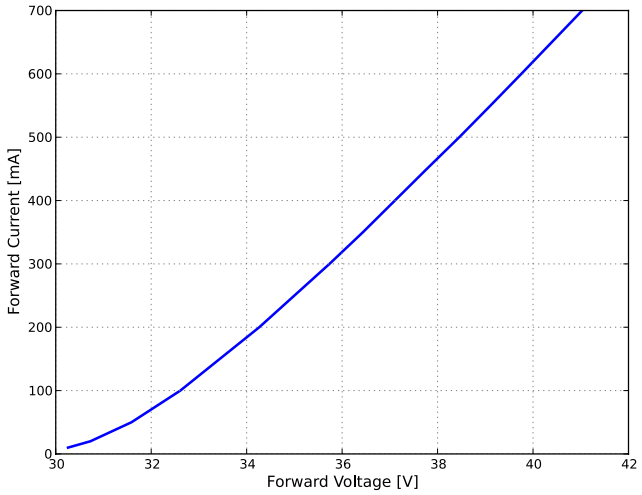

L2C5-xxxx1202EH600

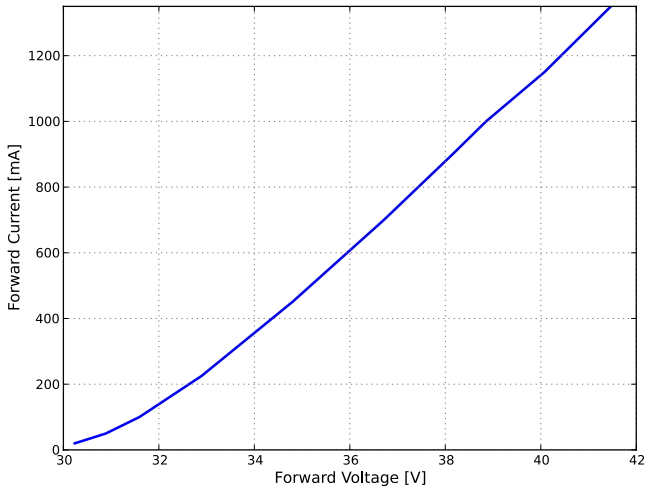

L2C5-xxxx1204E0900

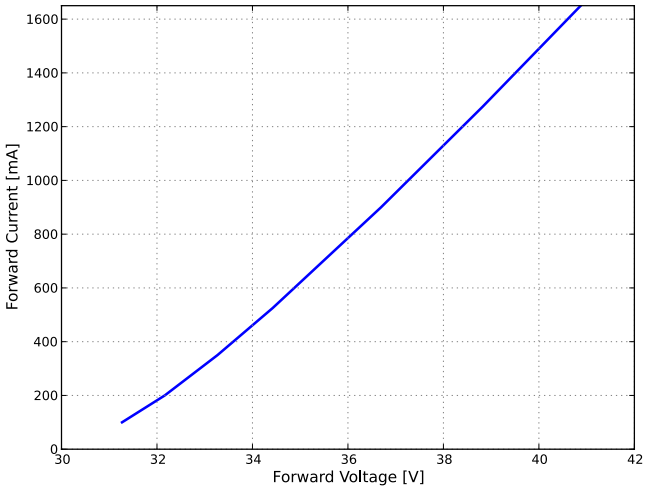

L2C5-xxxx1205E1100

Figure 4. Typical forward current vs. forward voltage for LUXEON CoB Core Range – High Density at T_j=85°C.

Radiation Pattern Characteristics

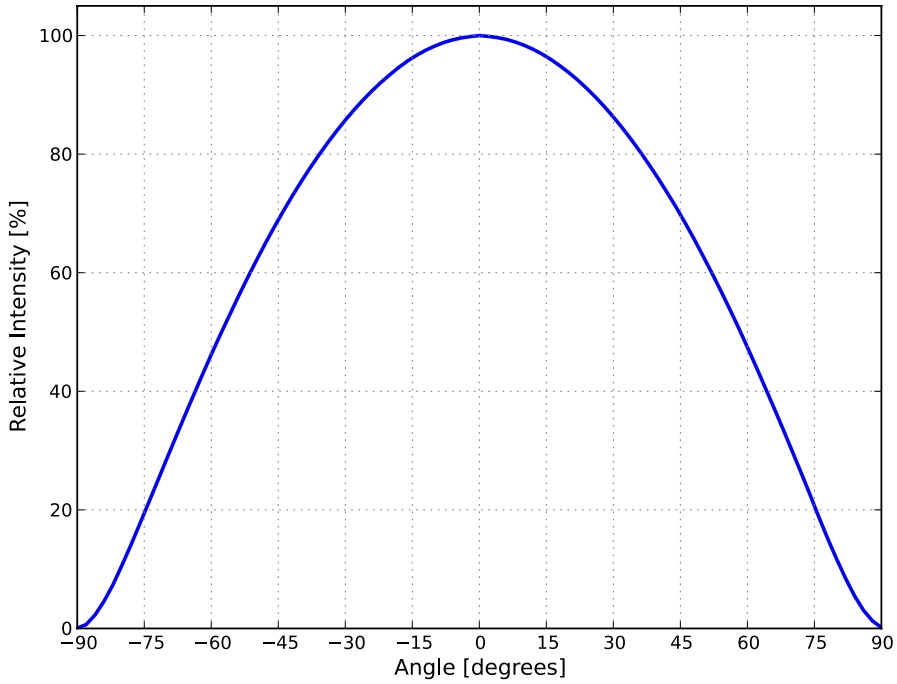

Figure 5. Typical radiation pattern for LUXEON CoB Core Range – High Density at specified test current, T_j=85ºC.

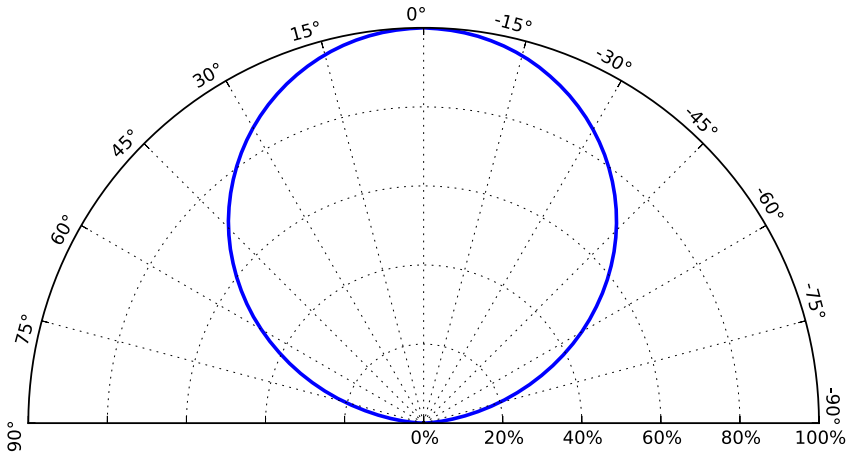

Figure 6. Typical polar radiation pattern for LUXEON CoB Core Range – High Density at specified test current, T_j=85ºC.

 ©2022 Lumileds Holding B.V. All rights reserved.

Color Bin Definitions

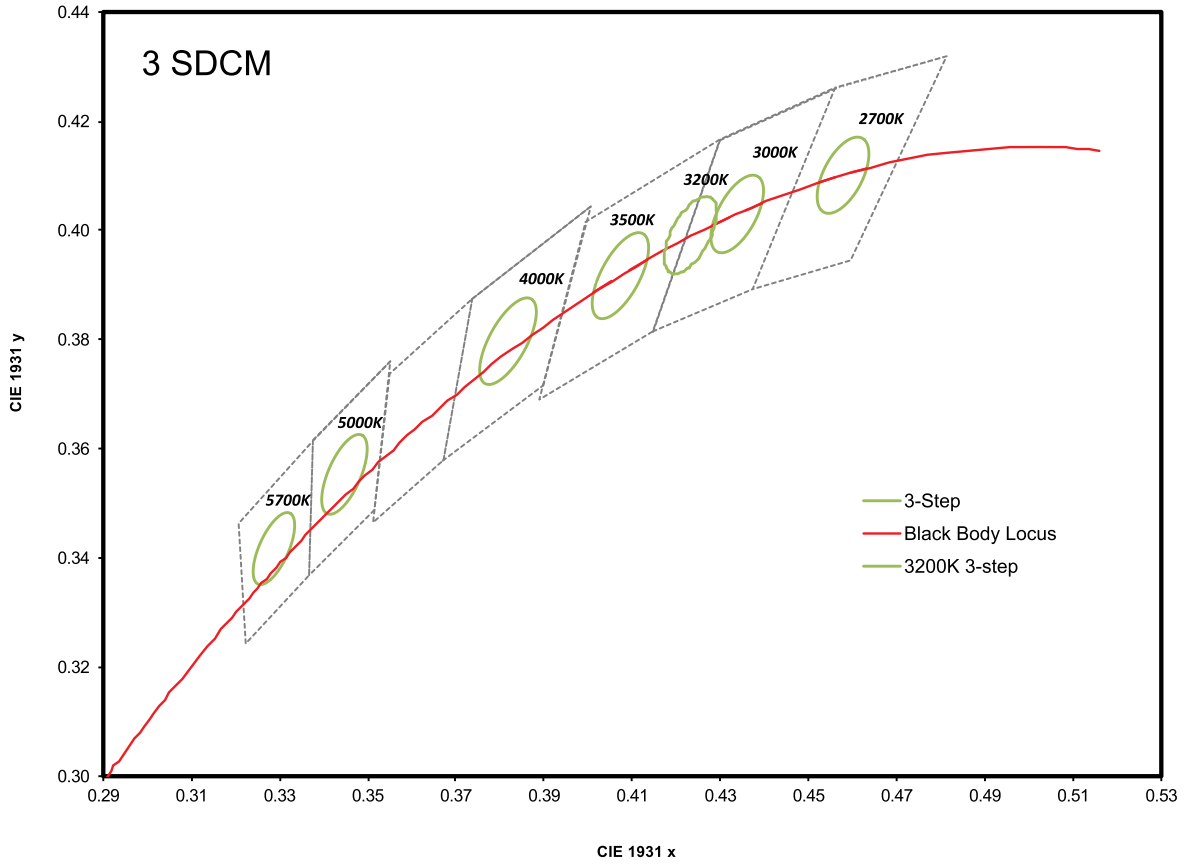

Figure 7. 3-step MacAdam ellipse illustration for Table 5.

Table 5. 3-step MacAdam ellipse color bin definitions for LUXEON CoB Core Range – High Density.

NOMINAL CCT	COLOR SPACE	CENTER POINT [1] (cx, cy)	MAJOR AXIS, a	MINOR AXIS, b	ELLIPSE ROTATION ANGLE, θ
2200K	Single 3-step MacAdam ellipse	(0.5020, 0.4155)	0.00862	0.00397	49.30°
2700K	Single 3-step MacAdam ellipse	(0.4578, 0.4101)	0.00810	0.00420	53.70°
3000K	Single 3-step MacAdam ellipse	(0.4338, 0.4030)	0.00834	0.00408	53.20°
3200K	Single 3-step MacAdam ellipse	(0.4232, 0.3991)	0.00834	0.00408	53.20°
3500K	Single 3-step MacAdam ellipse	(0.4073, 0.3917)	0.00927	0.00414	54.00°
4000K	Single 3-step MacAdam ellipse	(0.3818, 0.3797)	0.00939	0.00402	53.70°
5000K	Single 3-step MacAdam ellipse	(0.3447, 0.3553)	0.00822	0.00354	59.60°
5700K	Single 3-step MacAdam ellipse	(0.3287, 0.3417)	0.00745	0.00320	59.09°
6500K	Single 3-step MacAdam ellipse	(0.3123, 0.3282)	0.00669	0.00285	58.57°

Notes for Table 5:
1. Lumileds maintains a tolerance of ±0.005 on x and y coordinates in the CIE 1931 color space.

 ©2022 Lumileds Holding B.V. All rights reserved.

Mechanical Dimensions

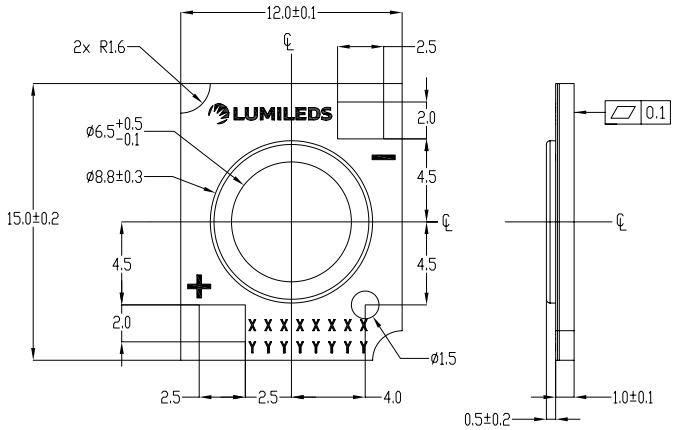

L2C5-xxxx1202EH600

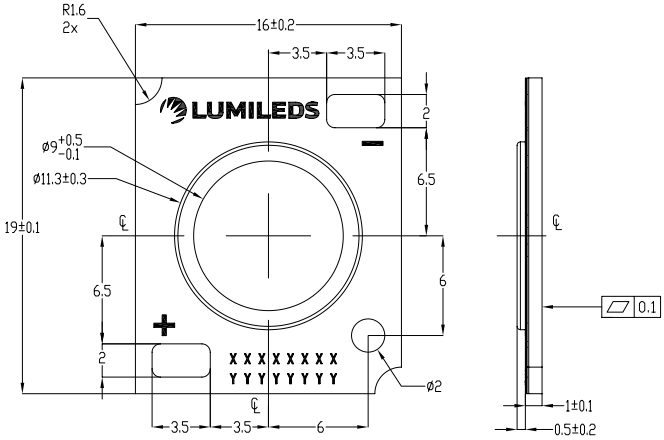

L2C5-xxxx1204E0900

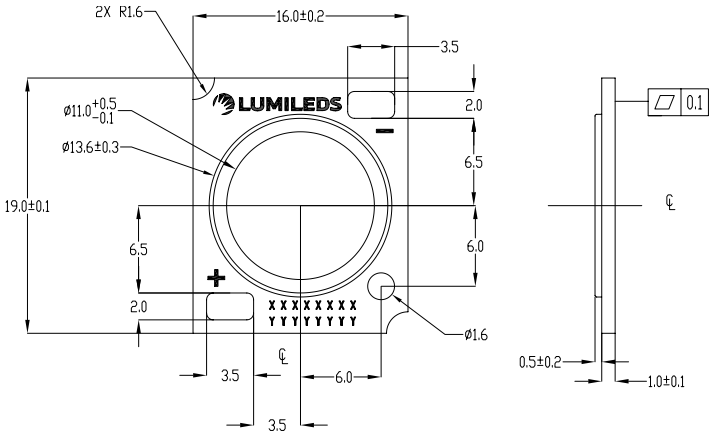

L2C5-xxxx1205E1100

Figure 8. Mechanical dimensions for LUXEON CoB Core Range – High Density.

Notes for Figure 8:
1. Drawings are not to scale.
2. All dimensions are in millimeters.

Packaging Information

LUXEON CoB Core Range – High Density LEDs are packaged in tubes then in a carton box. Each tube contains a specified number of LEDs. The LEDs in each tube come from a single category code, ensuring they are all well-matched for light output, color, and forward voltage. Each tube contains a rubber stopper at one end. The tube label has both alphanumeric and bar code information. The carton boxes have printed information providing part numbers with CAT codes that indicate luminous flux, color and forward voltage bins.

Table 6. Number of LEDs per tube for LUXEON CoB Core Range – High Density.

PART NUMBER	TOTAL UNITS PER TUBE	TOTAL TUBES PER INNER BOX	TOTAL UNITS PER INNER BOX
L2C5-xxxx1202EH600	20	5	100
L2C5-xxxx1204E0900	20	5	100
L2C5-xxxx1205E1100	20	5	100

Tube Dimensions

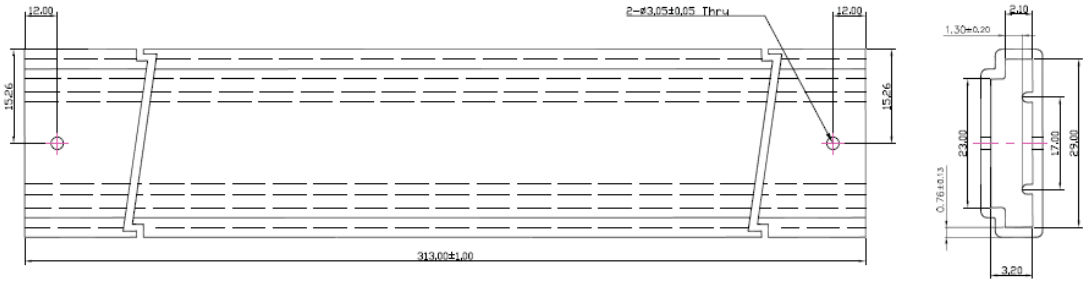

Figure 9a. Tube dimensions for L2C5-xxxx1202EH600.

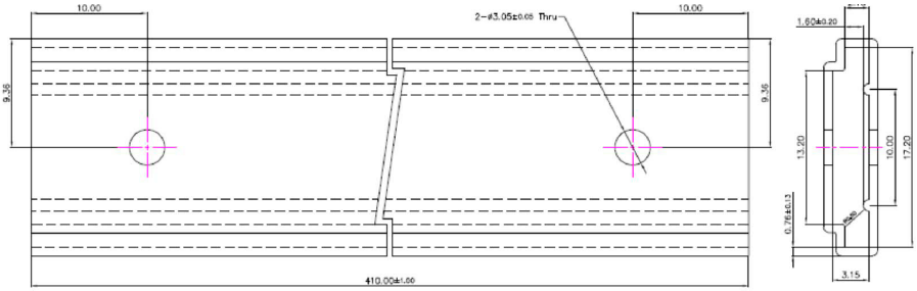

Figure 9b. Tube dimensions for L2C5-xxxx1204E0900.

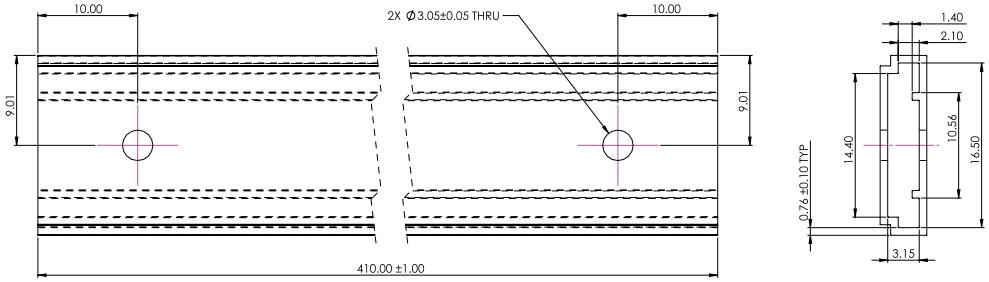

Figure 9c. Tube dimensions for L2C5-xxxx1205E1100.

Notes for Figures 9a, 9b and 9c:
1. Drawings not to scale.
2. All dimensions are in millimeters.

 ©2022 Lumileds Holding B.V. All rights reserved.

About Lumileds

Companies developing automotive, mobile, IoT and illumination lighting applications need a partner who can collaborate with them to push the boundaries of light. With over 100 years of inventions and industry firsts, Lumileds is a global lighting solutions company that helps customers around the world deliver differentiated solutions to gain and maintain a competitive edge. As the inventor of Xenon technology, a pioneer in halogen lighting and the leader in high performance LEDs, Lumileds builds innovation, quality and reliability into its technology, products and every customer engagement. Together with its customers, Lumileds is making the world safer, better and more beautiful—with light.

To learn more about our lighting solutions, visit lumileds.com.

LUMILEDS

©2022 Lumileds Holding B.V. All rights reserved. LUXEON is a registered trademark of the Lumileds Holding B.V. in the United States and other countries.

lumileds.com

Neither Lumileds Holding B.V. nor its affiliates shall be liable for any kind of loss of data or any other damages, direct, indirect or consequential, resulting from the use of the provided information and data. Although Lumileds Holding B.V. and/or its affiliates have attempted to provide the most accurate information and data, the materials and services information and data are provided "as is," and neither Lumileds Holding B.V. nor its affiliates warrants or guarantees the contents and correctness of the provided information and data. Lumileds Holding B.V. and its affiliates reserve the right to make changes without notice. You as user agree to this disclaimer and user agreement with the download or use of the provided materials, information and data. A listing of Lumileds product/patent coverage may be accessed at lumileds.com/patents.

DS189 LUXEON CoB Core Range – High Density
Prod 20220712