LUMILEDS

ILLUMINATION



LUXEON CoB with CrispColor Technology™



Fashion retail lighting that makes an impact, highlighting rich colors and increasing contrast

The LUXEON CoB with CrispColor Technology LED is the ultimate solution that makes colors pop and makes fabrics come to life. With efficient solid state lighting technology, the contrast of colors has never been so vivid. Our special phosphor technology has created a higher gamut color rendering than existing solutions with a specific color point below the Black Body Line to allow for Class A products. Combined with industry leading performance, LUXEON CoB with CrispColor Technology creates a highly impactful retail experience with all of the advantages of our LUXEON CoB range, including lowest R_{th}, small Light Emitting Surface (LES) and 3-step MacAdam ellipse color definition, which is tested at 85°C.

FEATURES AND BENEFITS

- Highest flux densities with industry's smallest Light Emitting Surface (LES)
- 3-step MacAdam ellipse color definition: *Freedom from Binning* for color consistency from luminaire to luminaire
- Up to 4x lower thermal resistance than competition, enabling smaller heatsinks and higher lumens
- Supported by a comprehensive optical, mechanical and electrical ecosystem

PRIMARY APPLICATIONS

- Downlights
- Indoor Area Lighting
- Lamps
- Spotlights

DS165 LUXEON CoB with CrispColor Technology Product Datasheet ©2021 Lumileds Holding B.V. All rights reserved.

Table of Contents

General Product Information 2
- Product Test Conditions 2
- Part Number Nomenclature 2
- Lumen Maintenance 2
- Environmental Compliance 2

Performance Characteristics 3
- Product Selection Guide 3
- Optical Characteristics 4
- Electrical and Thermal Characteristics 5

Absolute Maximum Ratings 5

Characteristic Curves 6
- Spectral Power Distribution Characteristics 6
- Light Output Characteristics 6
- Forward Current Characteristics 9
- Radiation Pattern Characteristics 11

Color Bin Definitions 12

Mechanical Dimensions 13

Packaging and Labeling Information 15
- Tube 15
- Inner Box 17
- Outer Box 18

 ©2021 Lumileds Holding B.V. All rights reserved.

General Product Information

Product Test Conditions

LUXEON CoB with CrispColor Technology LEDs are tested and binned with a DC drive current specified below at a junction temperature, T_J, of 85°C:

200mA - LUXEON CoB 1202s
200mA - LUXEON CoB 1202
300mA - LUXEON CoB 1203
450mA - LUXEON CoB 1204
600mA - LUXEON CoB 1205
900mA - LUXEON CoB 1208
1200mA - LUXEON CoB 1211
1600mA - LUXEON CoB 1216

Part Number Nomenclature

Part numbers for LUXEON CoB with CrispColor Technology follow the convention below:

L 2 C 5 – **A A** H G **B B B B** E **C C** 0 0

Where:

A A – designates nominal CCT (27=2700K, 30=3000K, 33=3250K, 35=3500K, 40=4000K, 50=5000K)

B B B B – designates product configuration (example: 1202, 1203, 1204, 1205, 1208, 1211, 1216)

C C – designates Light Emitting Surface (LES) size (06=6mm, 09=9mm, 13=13mm, 15=15mm, 19=19mm, 23=23mm)

Therefore, the following part number is used for a LUXEON CoB 1203, 3000K with a 9mm LES:

L 2 C 5 – **3 0** H G **1 2 0 3** E **0 9** 0 0

Lumen Maintenance

Please contact your local Sales Representative or Lumileds Technical Solutions Manager for more information about the long-term performance of this product.

Environmental Compliance

Lumileds LLC is committed to providing environmentally friendly products to the solid-state lighting market. LUXEON CoB with CrispColor Technology is compliant to the European Union directives on the restriction of hazardous substances in electronic equipment, namely the RoHS Directive 2011/65/EU and REACH Regulation (EC) 1907/2006. Lumileds LLC will not intentionally add the following restricted materials to its products: lead, mercury, cadmium, hexavalent chromium, polybrominated biphenyls (PBB) or polybrominated diphenyl ethers (PBDE).

 ©2021 Lumileds Holding B.V. All rights reserved.

Performance Characteristics

Product Selection Guide

Table 1. Product performance of LUXEON CoB with CrispColor Technology at specified test current, T_j=85°C.

PRODUCT	NOMINAL CCT	MIN CRI [1, 2, 3]	LUMINOUS FLUX [1] (lm)		TYPICAL LUMINOUS EFFICACY (lm/W)	TEST CURRENT (mA)	LES [4] (mm)	ENERGY EFFICIENCY CLASS [5]	PART NUMBER
			MINIMUM	TYPICAL					
LUXEON CoB 1202s	2700K	90	588	653	95	200	6	F	L2C5-27HG1202E0600
	3000K	90	630	700	101	200	6	F	L2C5-30HG1202E0600
	3250K	90	648	720	104	200	6	F	L2C5-33HG1202E0600
	3500K	90	656	729	106	200	6	F	L2C5-35HG1202E0600
	4000K	90	690	767	111	200	6	F	L2C5-40HG1202E0600
	5000K	90	716	796	115	200	6	F	L2C5-50HG1202E0600
LUXEON CoB 1202	2700K	90	613	681	99	200	9	F	L2C5-27HG1202E0900
	3000K	90	648	720	104	200	9	F	L2C5-30HG1202E0900
	3250K	90	675	750	109	200	9	F	L2C5-33HG1202E0900
	3500K	90	683	759	110	200	9	F	L2C5-35HG1202E0900
	4000K	90	720	800	116	200	9	F	L2C5-40HG1202E0900
	5000K	90	748	831	120	200	9	E	L2C5-50HG1202E0900
LUXEON CoB 1203	2700K	90	907	1008	97	300	9	F	L2C5-27HG1203E0900
	3000K	90	972	1080	104	300	9	F	L2C5-30HG1203E0900
	3250K	90	1017	1130	109	300	9	F	L2C5-33HG1203E0900
	3500K	90	1035	1150	111	300	9	F	L2C5-35HG1203E0900
	4000K	90	1066	1184	114	300	9	F	L2C5-40HG1203E0900
	5000K	90	1106	1229	119	300	9	F	L2C5-50HG1203E0900
LUXEON CoB 1204	2700K	90	1424	1582	101	450	13	Note 6	L2C5-27HG1204E1300
	3000K	90	1494	1660	106	450	13	F	L2C5-30HG1204E1300
	3250K	90	1575	1750	112	450	13	F	L2C5-33HG1204E1300
	3500K	90	1594	1771	113	450	13	F	L2C5-35HG1204E1300
	4000K	90	1656	1840	117	450	13	F	L2C5-40HG1204E1300
	5000K	90	1737	1930	123	450	13	E	L2C5-50HG1204E1300
LUXEON CoB 1205	2700K	90	1850	2055	98	600	13	Note 6	L2C5-27HG1205E1300
	3000K	90	2046	2273	108	600	13	F	L2C5-30HG1205E1300
	3250K	90	2034	2260	108	600	13	F	L2C5-33HG1205E1300
	3500K	90	2070	2300	110	600	13	F	L2C5-35HG1205E1300
	4000K	90	2172	2413	115	600	13	F	L2C5-40HG1205E1300
	5000K	90	2255	2506	119	600	13	E	L2C5-50HG1205E1300

Table 1 continued on next page.

1. Lumileds maintains a tolerance of ±2 on CRI and ±6.5% on luminous flux measurements.
2. Typical CRI is approximately 2 points higher than the minimum CRI specified, but this is not guaranteed.
3. R9 value of 90CRI products is >50.
4. Light Emitting Surface (LES) is the inner diameter (phosphor area) inside the dam.
5. Energy efficiency class as specified in Commission Delegated Regulation (EU) 2019/2015. The available range of energy efficiency classes is A-G.
6. Exception: Not available in EU or UK.

 ©2021 Lumileds Holding B.V. All rights reserved.

Table 1. Product performance of LUXEON CoB with CrispColor Technology at specified test current, T_j=85°C (continued).

PRODUCT	NOMINAL CCT	MIN CRI [1, 2, 3]	LUMINOUS FLUX [1] (lm)		TYPICAL LUMINOUS EFFICACY (lm/W)	TEST CURRENT (mA)	LES [4] (mm)	ENERGY EFFICIENCY CLASS [5]	PART NUMBER
			MINIMUM	TYPICAL					
LUXEON CoB 1208	2700K	90	2775	3083	98	900	15	Note 6	L2C5-27HG1208E1500
	3000K	90	3074	3415	109	900	15	F	L2C5-30HG1208E1500
	3250K	90	3105	3450	110	900	15	F	L2C5-33HG1208E1500
	3500K	90	3105	3450	110	900	15	F	L2C5-35HG1208E1500
	4000K	90	3263	3626	116	900	15	F	L2C5-40HG1208E1500
	5000K	90	3389	3766	120	900	15	E	L2C5-50HG1208E1500
LUXEON CoB 1211	2700K	90	3803	4226	101	1200	19	Note 6	L2C5-27HG1211E1900
	3000K	90	4137	4597	110	1200	19	F	L2C5-30HG1211E1900
	3250K	90	4190	4656	111	1200	19	F	L2C5-33HG1211E1900
	3500K	90	4264	4738	113	1200	19	F	L2C5-35HG1211E1900
	4000K	90	4466	4962	119	1200	19	E	L2C5-40HG1211E1900
	5000K	90	4638	5153	123	1200	19	E	L2C5-50HG1211E1900
LUXEON CoB 1216	2700K	90	4994	5549	101	1600	23	Note 6	L2C5-27HG1216E2300
	3000K	90	5450	6055	110	1600	23	F	L2C5-30HG1216E2300
	3250K	90	5492	6102	111	1600	23	F	L2C5-33HG1216E2300
	3500K	90	5589	6210	113	1600	23	F	L2C5-35HG1216E2300
	4000K	90	5864	6515	118	1600	23	F	L2C5-40HG1216E2300
	5000K	90	6089	6766	123	1600	23	E	L2C5-50HG1216E2300

Notes for Table 1:
1. Lumileds maintains a tolerance of ±2 on CRI and ±6.5% on luminous flux measurements.
2. Typical CRI is approximately 2 points higher than the minimum CRI specified, but this is not guaranteed.
3. R9 value of 90CRI products is >50.
4. Light Emitting Surface (LES) is the inner diameter (phosphor area) inside the dam.
5. Energy efficiency class as specified in Commission Delegated Regulation (EU) 2019/2015. The available range of energy efficiency classes is A-G.
6. Exception: Not available in EU or UK.

Optical Characteristics

Table 2. Optical characteristics for LUXEON CoB with CrispColor Technology at specified test current, T_j=85°C.

PART NUMBER	TYPICAL TOTAL INCLUDED ANGLE [1]	TYPICAL VIEWING ANGLE [2]
L2C5-xxHG12xxExx00	135°	115°

Notes for Table 2:
1. Total angle at which 90% of total luminous flux is captured.
2. Viewing angle is the off axis angle from the LED centerline where the luminous intensity is ½ of the peak value.

 ©2021 Lumileds Holding B.V. All rights reserved.

Electrical and Thermal Characteristics

Table 3. Electrical and thermal characteristics for LUXEON CoB with CrispColor Technology at specified test current, T_j=85°C.

PART NUMBER	FORWARD VOLTAGE [1] (V_f)			TYPICAL TEMPERATURE COEFFICIENT OF FORWARD VOLTAGE [2] (mV/°C)	TYPICAL THERMAL RESISTANCE—JUNCTION TO CASE [3] (°C/W)
	MINIMUM	TYPICAL	MAXIMUM		
L2C5-xxHG1202E0600	32.5	34.5	37.5	-16	0.98
L2C5-xxHG1202E0900	32.5	34.5	37.5	-16	0.98
L2C5-xxHG1203E0900	32.5	34.5	37.5	-16	0.70
L2C5-xxHG1204E1300	32.5	34.8	37.5	-16	0.55
L2C5-xxHG1205E1300	32.5	35.0	37.5	-16	0.51
L2C5-xxHG1208E1500	32.5	34.8	37.5	-16	0.29
L2C5-xxHG1211E1900	32.5	34.8	37.5	-16	0.23
L2C5-xxHG1216E2300	32.5	34.5	37.5	-16	0.14

Notes for Table 3:
1. Lumileds maintains a tolerance of ±2% on forward voltage measurements.
2. Measured between 25°C and 85°C for coefficient of forward voltage.
3. Thermal resistance is measured between junction and the bottom of the LUXEON CoB substrate.

Absolute Maximum Ratings

Table 4. Absolute maximum ratings for LUXEON CoB with CrispColor Technology.

PARAMETER	MAXIMUM PERFORMANCE
DC Forward Current [1, 2]	2x test current
LED Junction Temperature [1] (DC & Pulse)	125°C
ESD Sensitivity (ANSI/ESDA/JEDEC JS-001-2012)	Class 3B
Operating Case Temperature [1]	-40°C to 105°C
LED Storage Temperature	-40°C to 120°C
Allowable Reflow Cycles	3
Reverse Voltage ($V_{reverse}$)	LUXEON LEDs are not designed to be driven in reverse bias

Notes for Table 4:
1. Proper current derating must be observed to maintain the junction temperature below the maximum allowable junction temperature.
2. Residual periodic variations due to power conversion from alternating current (AC) to direct current (DC), also called "ripple," are acceptable if the following conditions are met:
   – The frequency of the ripple current is 100Hz or higher
   – The average current for each cycle does not exceed the maximum allowable DC forward current
   – The maximum amplitude of the ripple does not exceed the maximum peak pulsed forward current

 ©2021 Lumileds Holding B.V. All rights reserved.

Characteristic Curves

Spectral Power Distribution Characteristics

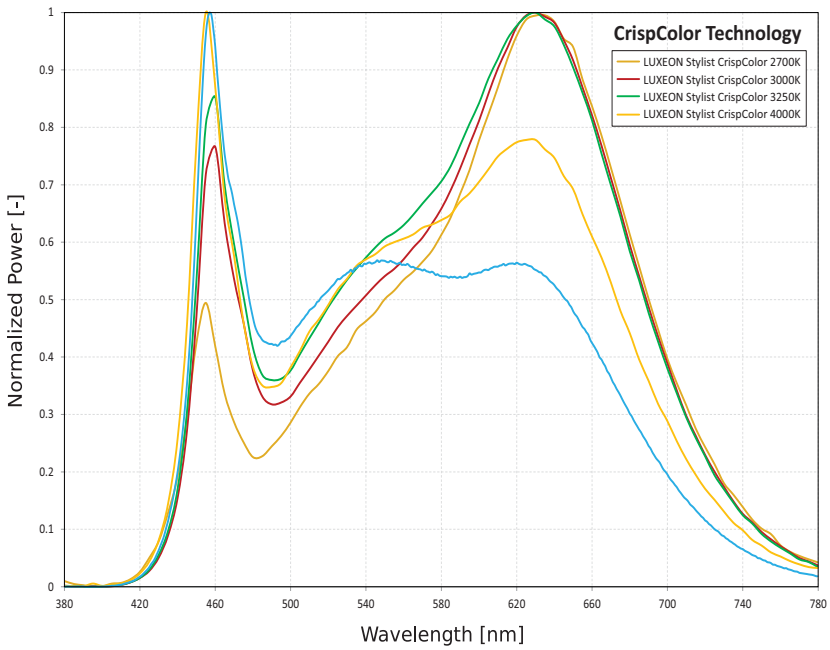

Figure 1. Typical normalized power vs. wavelength for LUXEON CoB with CrispColor Technology at specified test current, T_j=85°C.

Light Output Characteristics

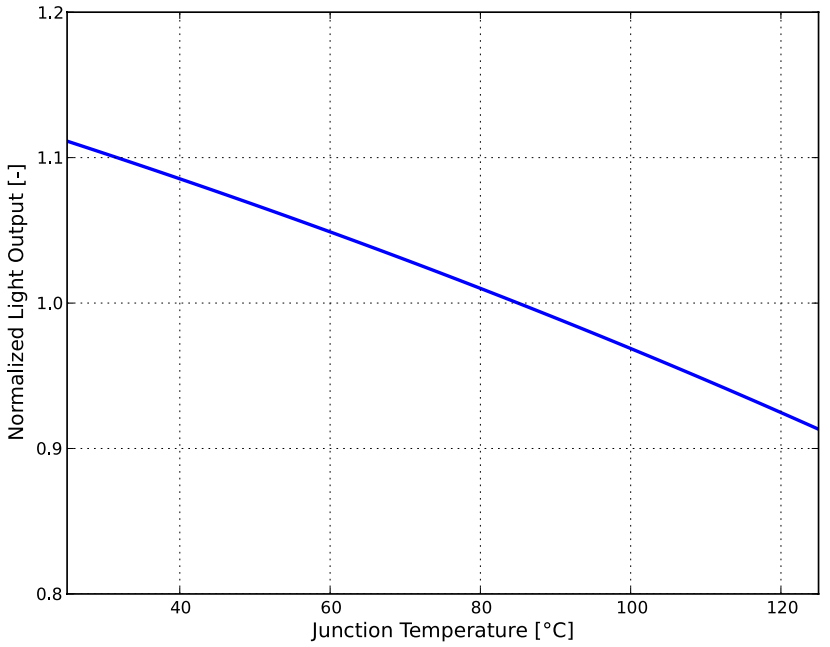

Figure 2. Typical normalized light output vs. junction temperature for LUXEON CoB with CrispColor Technology at specified test current.

 ©2021 Lumileds Holding B.V. All rights reserved.

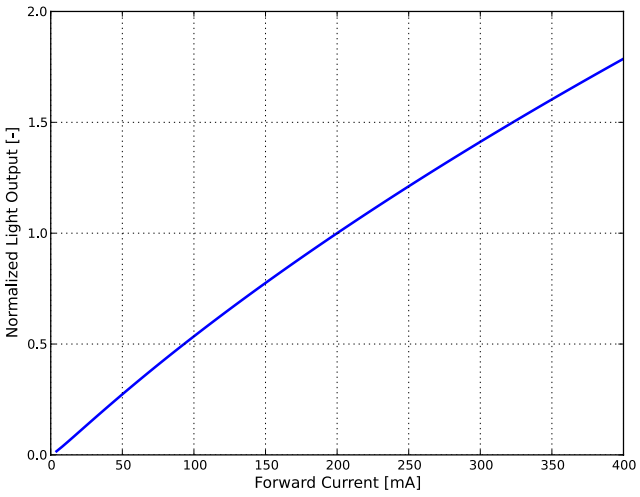

L2C5-xxHG1202E0600

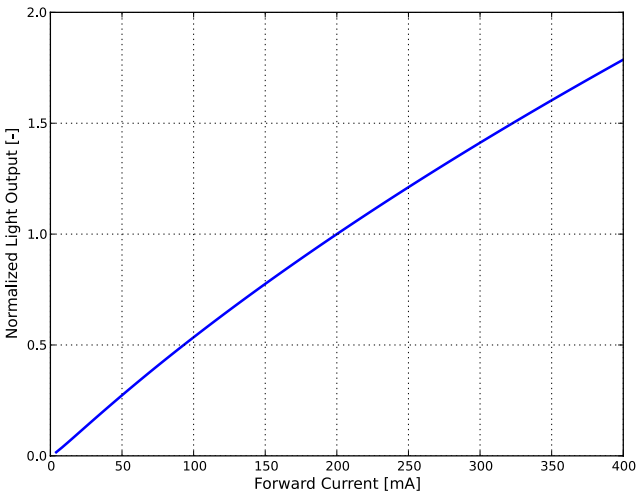

L2C5-xxHG1202E0900

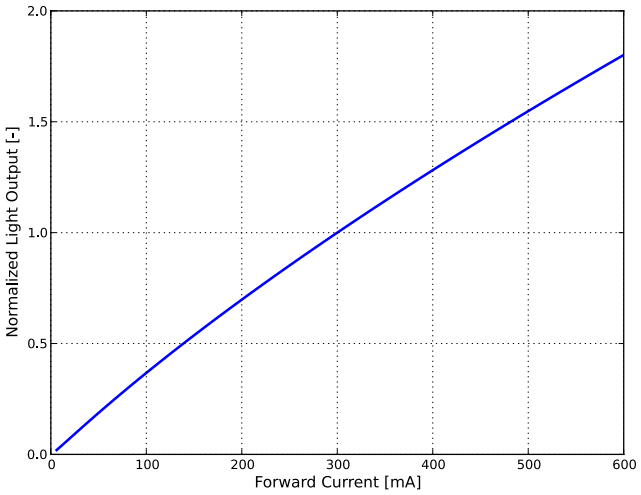

L2C5-xxHG1203E0900

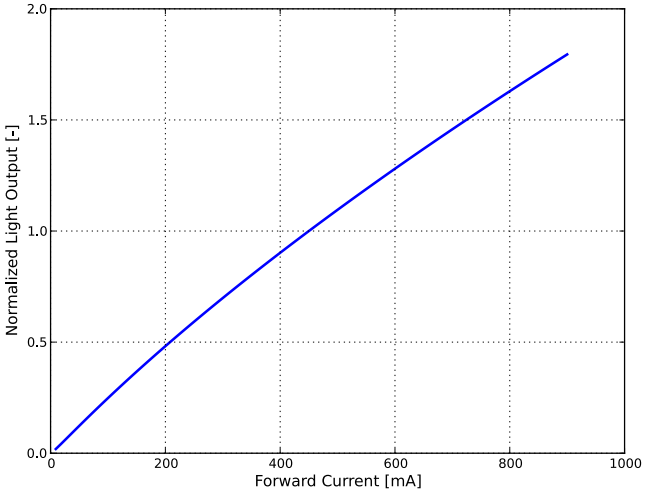

L2C5-xxHG1204E1300

 ©2021 Lumileds Holding B.V. All rights reserved.

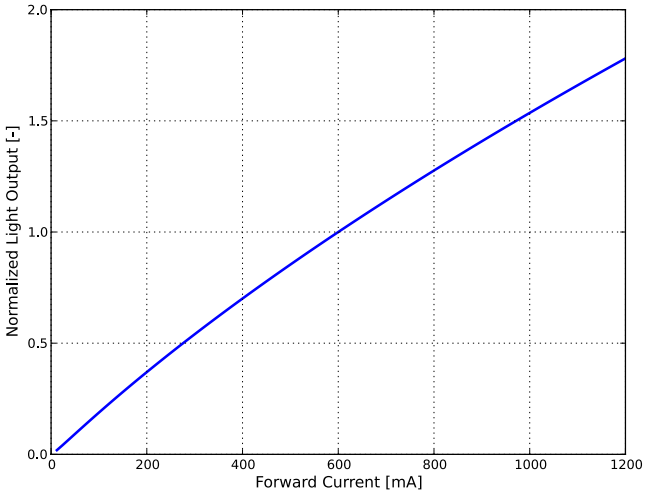

L2C5-xxHG1205E1300

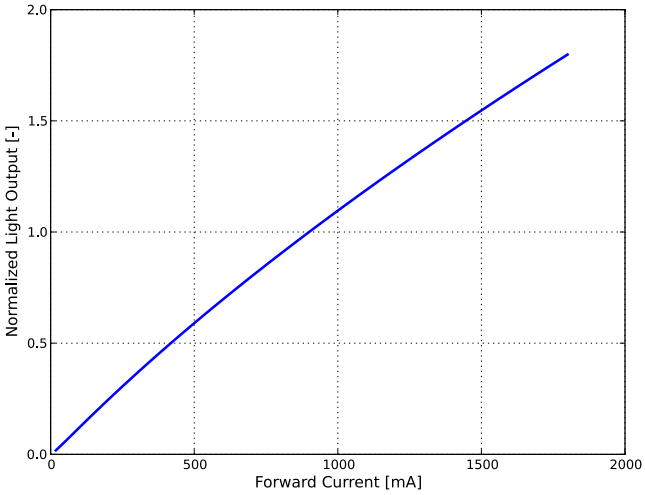

L2C5-xxHG1208E1500

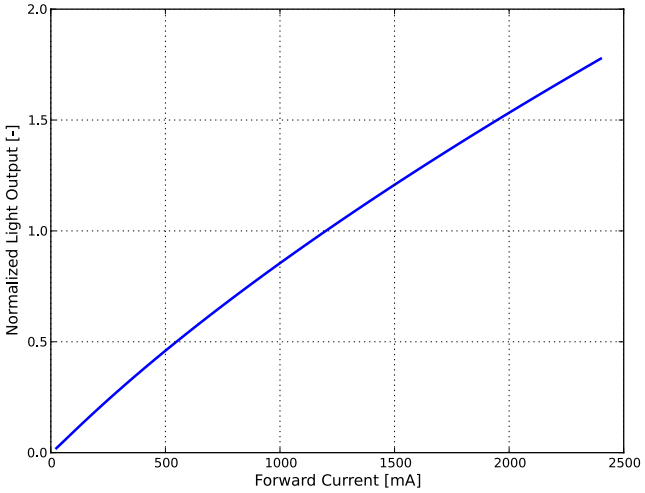

L2C5-xxHG1211E1900

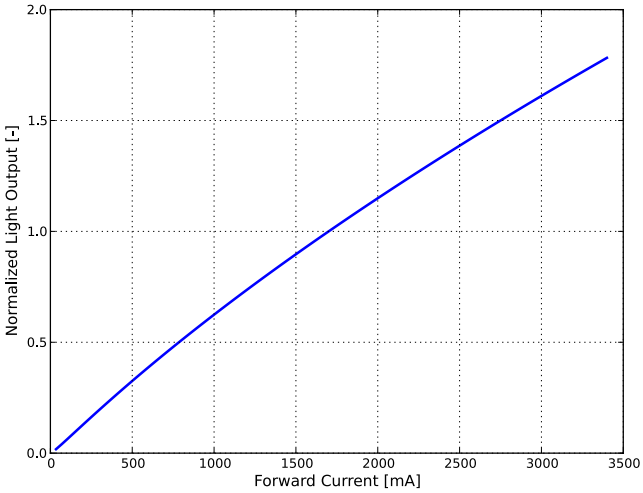

L2C5-xxHG1216E2300

Figure 3. Typical normalized light output vs. forward current for LUXEON CoB with CrispColor Technology at T_j=85°C.

 ©2021 Lumileds Holding B.V. All rights reserved.

Forward Current Characteristics

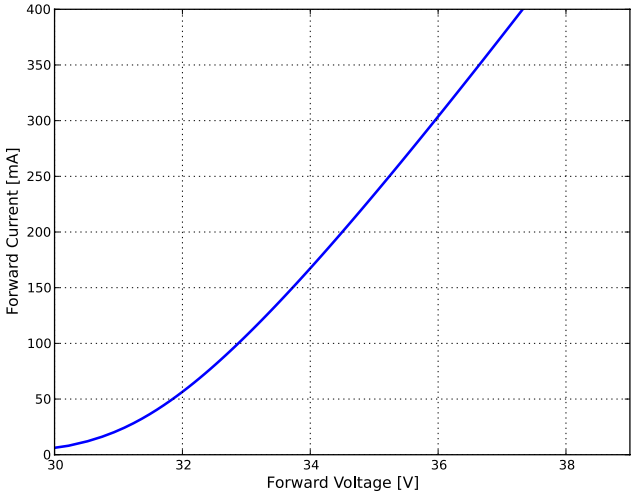

L2C5-xxHG1202E0600

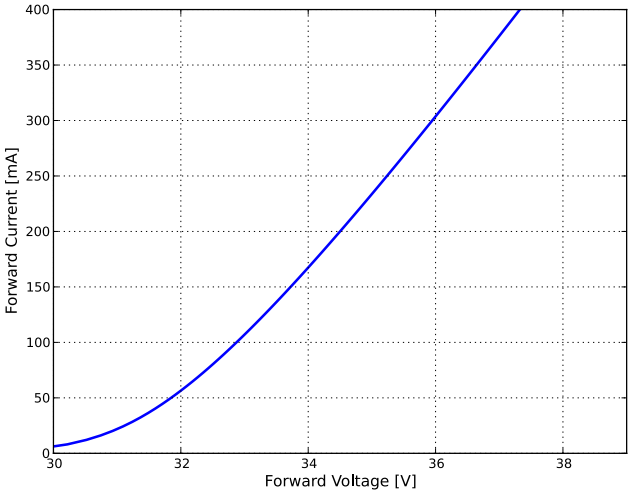

L2C5-xxHG1202E0900

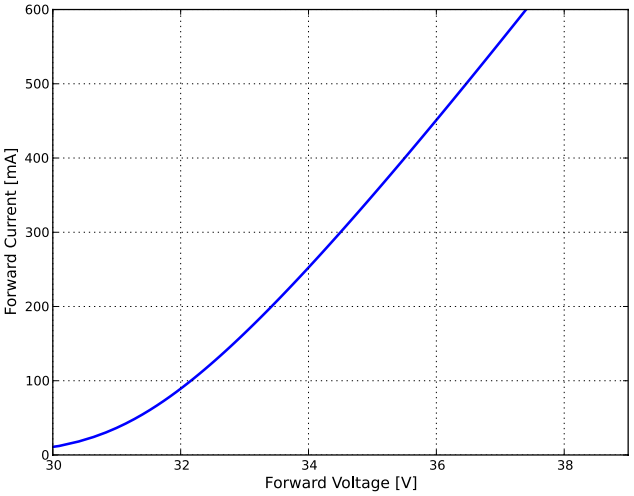

L2C5-xxHG1203E0900

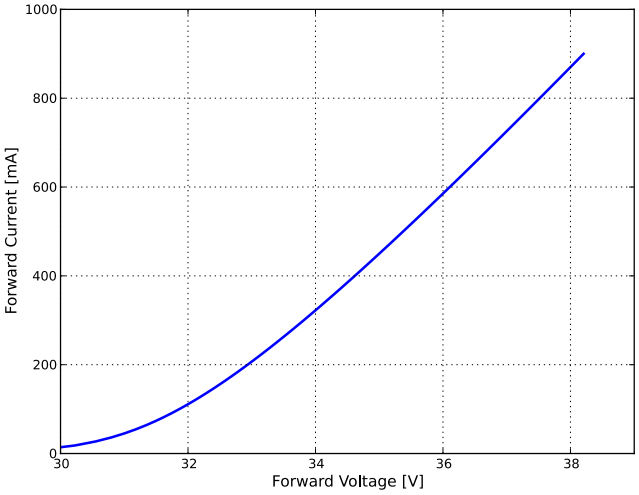

L2C5-xxHG1204E1300

 ©2021 Lumileds Holding B.V. All rights reserved.

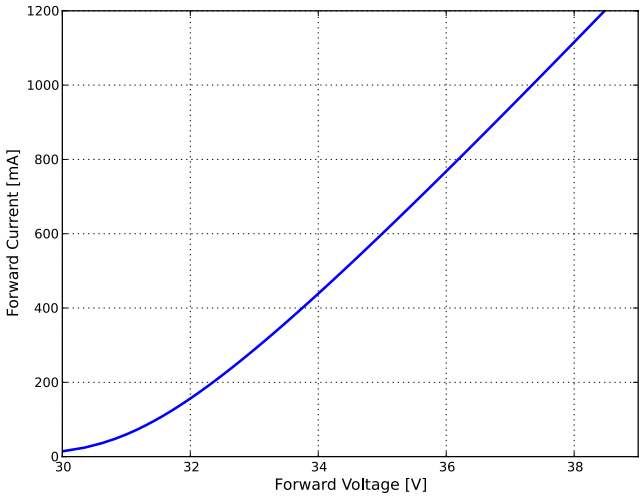

L2C5-xxHG1205E1300

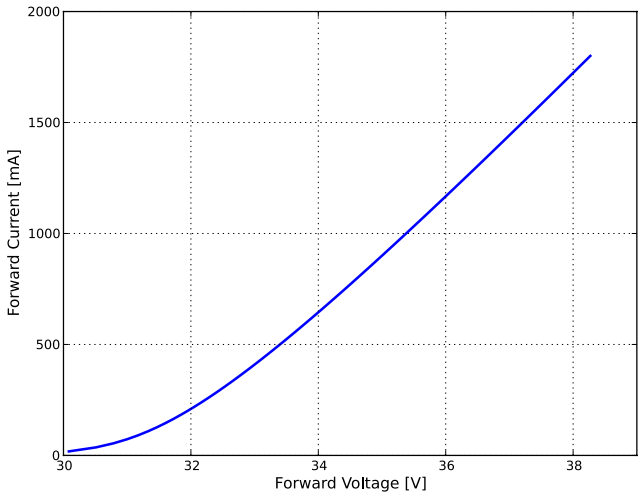

L2C5-xxHG1208E1500

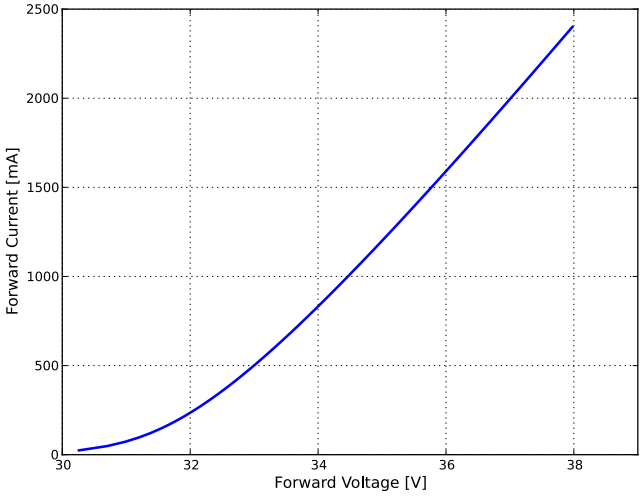

L2C5-xxHG1211E1900

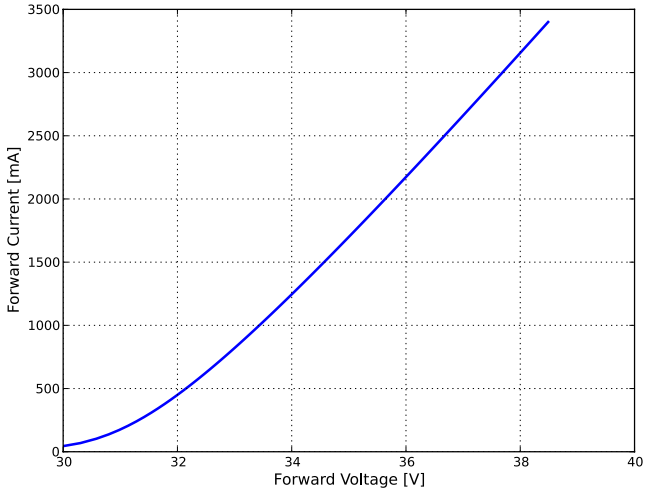

L2C5-xxHG1216E2300

Figure 4. Typical forward current vs. forward voltage for LUXEON CoB with CrispColor Technology at T_j=85°C.

 ©2021 Lumileds Holding B.V. All rights reserved.

Radiation Pattern Characteristics

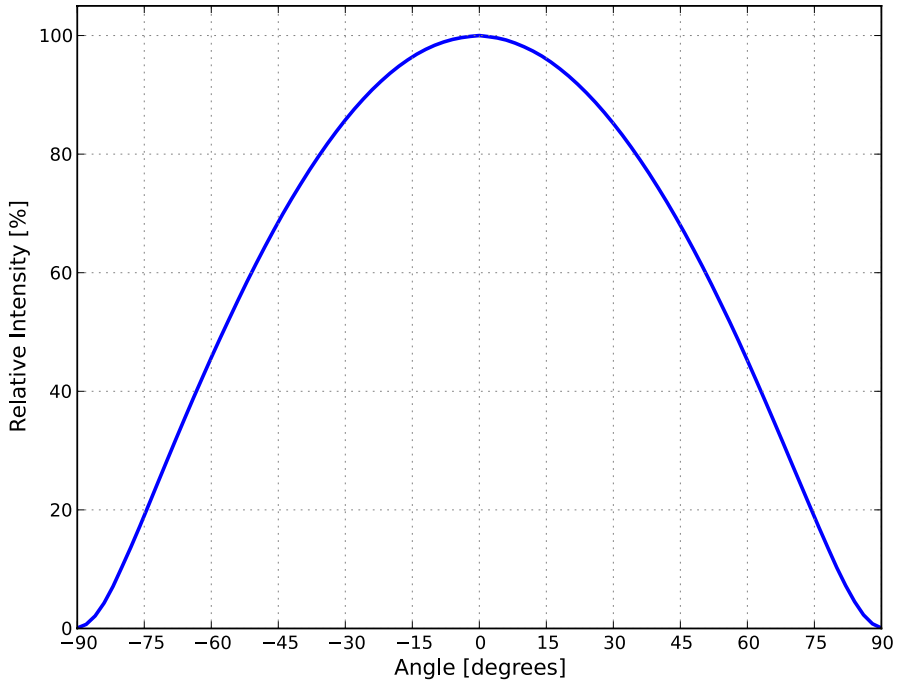

Figure 5. Typical radiation pattern for LUXEON CoB with CrispColor Technology at specified test current, T_j=85ºC.

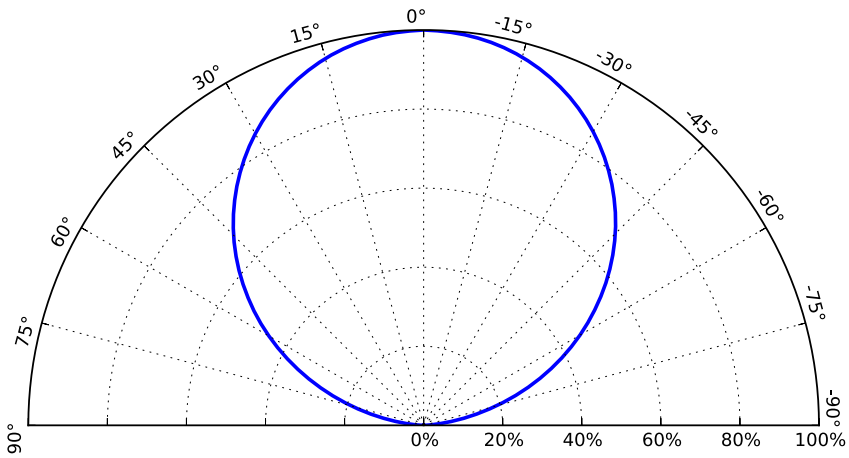

Figure 6. Typical polar radiation pattern for LUXEON CoB with CrispColor Technology at specified test current, T_j=85ºC.

 ©2021 Lumileds Holding B.V. All rights reserved.

Color Bin Definitions

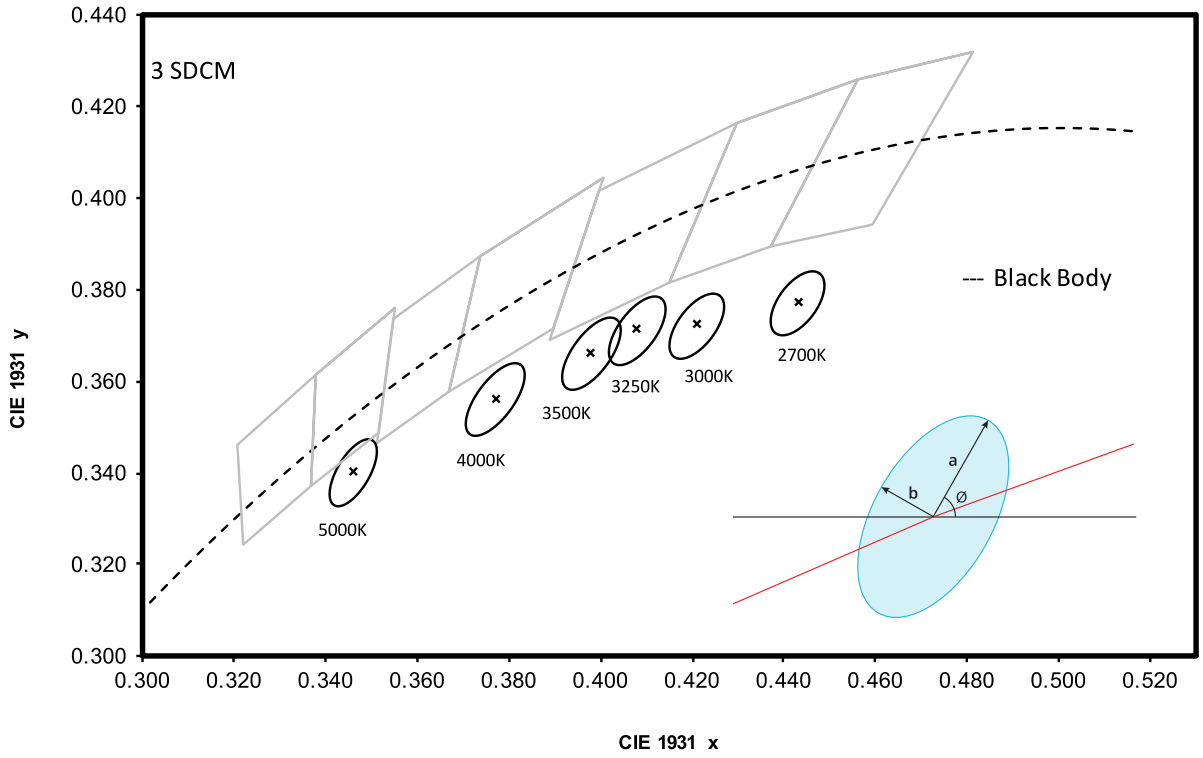

Figure 7. 3-step MacAdam ellipse illustration for Table 5.

Table 5. 3-step MacAdam ellipse color bin definition for LUXEON CoB with CrispColor Technology.

NOMINAL CCT	COLOR SPACE	CENTER POINT [1] (cx, cy)	MAJOR AXIS, a	MINOR AXIS, b	ELLIPSE ROTATION ANGLE, θ
2700K	Single 3-step MacAdam ellipse	(0.443, 0.377)	0.00810	0.00420	53.70°
3000K	Single 3-step MacAdam ellipse	(0.421, 0.372)	0.00834	0.00408	53.20°
3250K	Single 3-step MacAdam ellipse	(0.408, 0.371)	0.00834	0.00408	53.20°
3500K	Single 3-step MacAdam ellipse	(0.398, 0.366)	0.00927	0.00414	54.00°
4000K	Single 3-step MacAdam ellipse	(0.377, 0.356)	0.00939	0.00402	53.70°
5000K	Single 3-step MacAdam ellipse	(0.346, 0.340)	0.00822	0.00354	59.60°

Notes for Table 5:
1. Lumileds maintains a tolerance of ±0.005 on x and y coordinates in the CIE 1931 color space.

 ©2021 Lumileds Holding B.V. All rights reserved.

Mechanical Dimensions

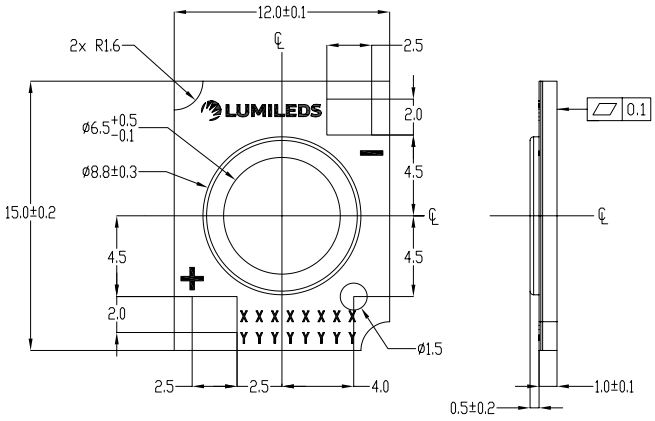

L2C5-xxHG1202E0600

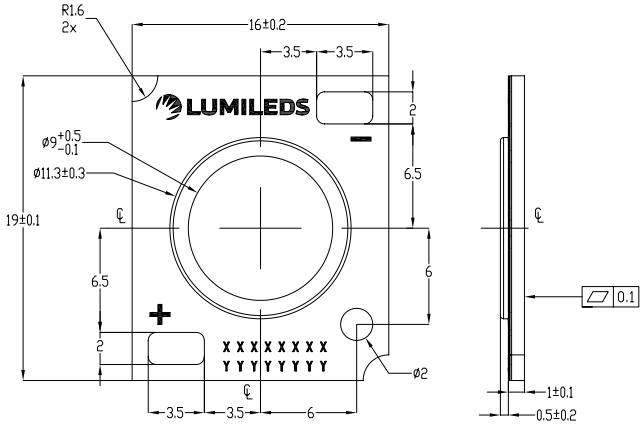

L2C5-xxHG1202E0900, L2C5-xxHG1203E0900

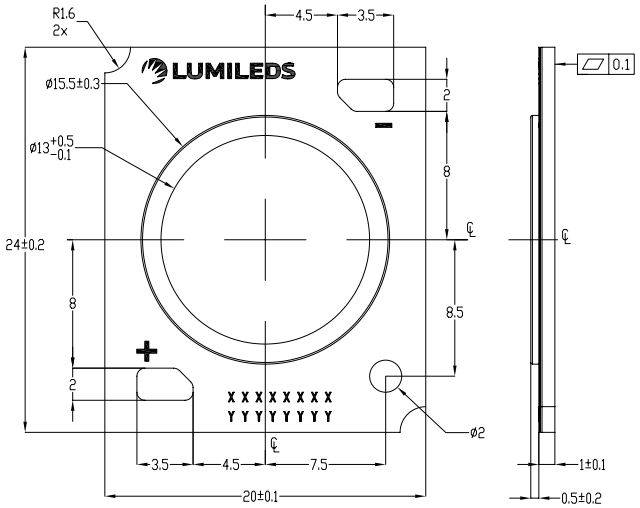

L2C5-xxHG1204E1300, L2C5-xxHG1205E1300

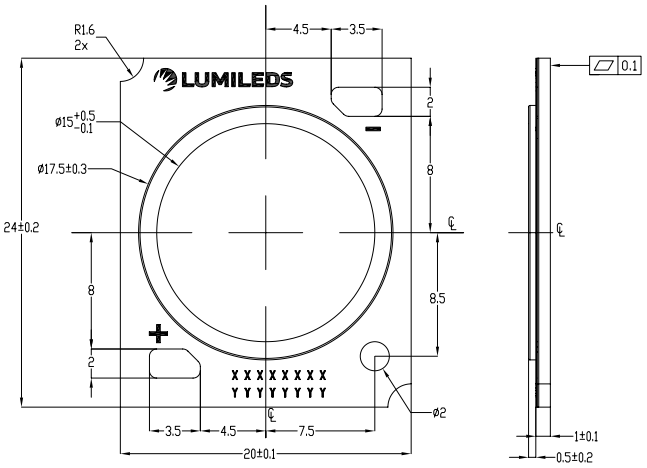

L2C5-xxHG1208E1500

 ©2021 Lumileds Holding B.V. All rights reserved.

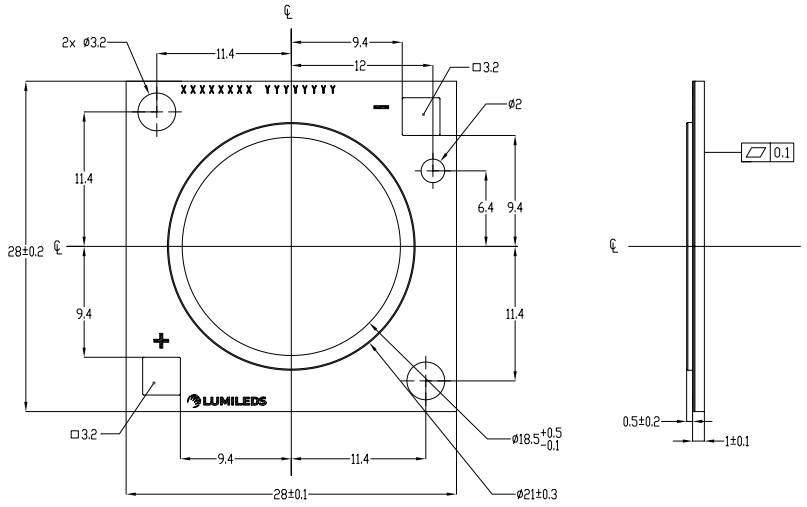

L2C5-xxHG1211E1900

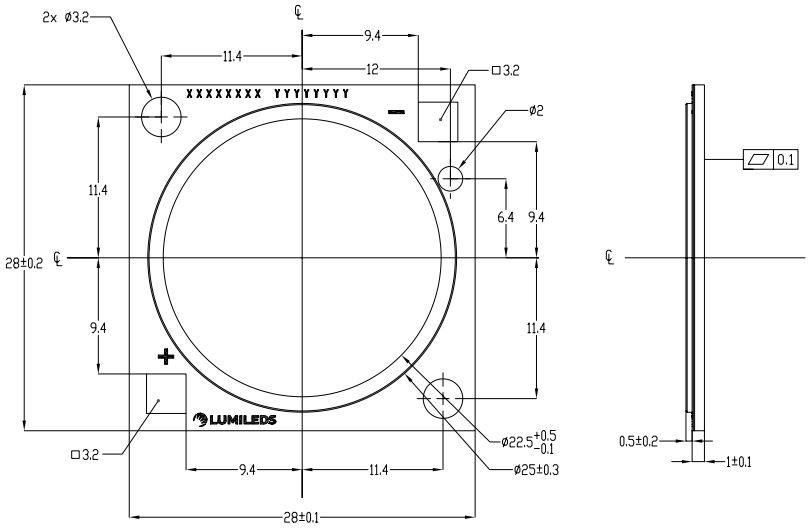

L2C5-xxHG1216E2300

Figure 8. Mechanical dimensions for LUXEON CoB with CrispColor Technology.

Notes for Figure 8:
1. Drawings are not to scale.
2. All dimensions are in millimeters.

Packaging and Labeling Information

LUXEON CoB with CrispColor Technology LEDs are packaged in tubes then in a carton box. Each tube contains a specified number of LEDs. The LEDs in each tube come from a single category code, ensuring they are all well-matched for light output, color, and forward voltage. Each tube contains a rubber stopper at one end. The tube label has both alphanumeric and bar code information. The carton boxes have printed information providing part numbers with CAT codes that indicate luminous flux, color and forward voltage bins.

Table 6. Package information for LUXEON CoB with CrispColor Technology.

PART NUMBER	TOTAL UNITS PER TUBE	TOTAL TUBES PER INNER BOX	TOTAL UNITS PER INNER BOX
L2C5-xxHG1202E0600	20	5	100
L2C5-xxHG1202E0900	20	5	100
L2C5-xxHG1203E0900	20	5	100
L2C5-xxHG1204E1300	20	5	100
L2C5-xxHG1205E1300	20	5	100
L2C5-xxHG1208E1500	20	5	100
L2C5-xxHG1211E1900	10	5	50
L2C5-xxHG1216E2300	10	5	50

Tube

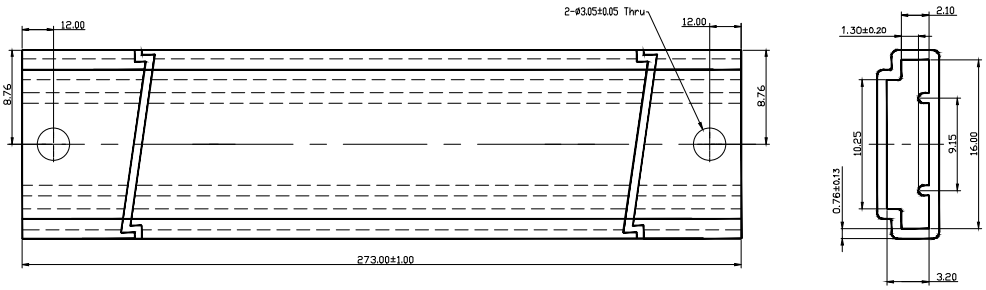

Figure 9a. Tube dimensions for L2C5-xxHG1202E0600.

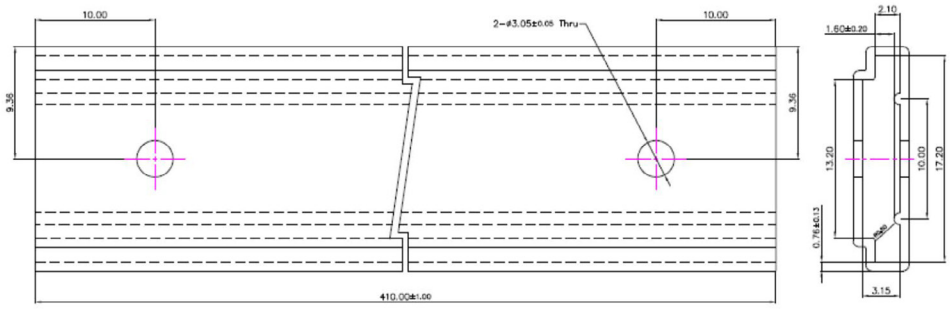

Figure 9b. Tube dimensions for L2C5-xxHG120xE0900.

Notes for Figures 9a and 9b:
1. Drawings not to scale.
2. All dimensions are in millimeters.

 ©2021 Lumileds Holding B.V. All rights reserved.

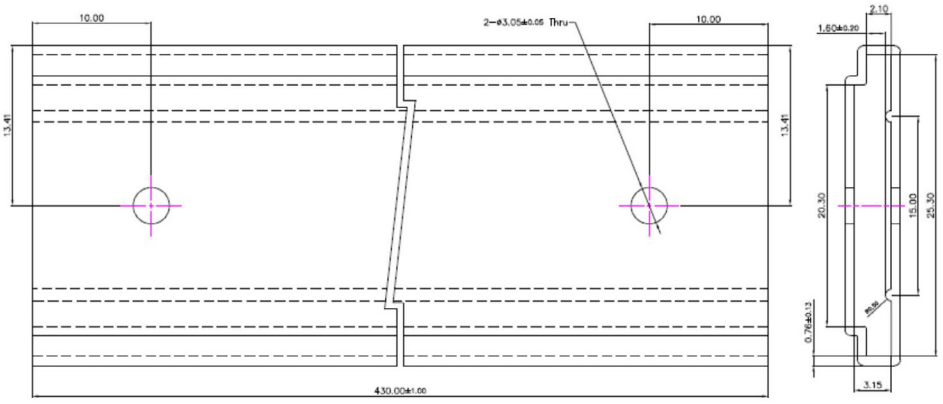

Figure 9c. Tube dimensions for L2C5-xxHG120xE1300 and L2C5-xxHG1208E1500.

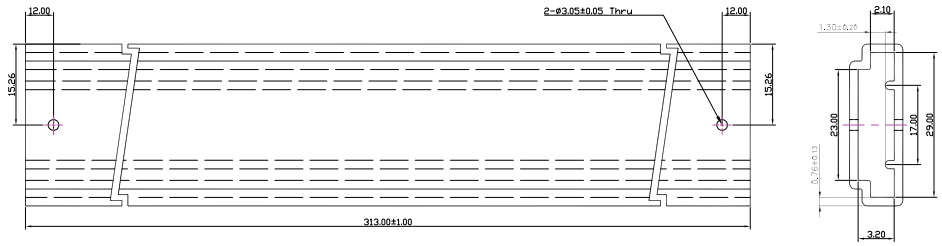

Figure 9d. Tube dimensions for L2C5-xxHG1211E1900 and L2C5-xxHG1216E2300.

Notes for Figures 9c and 9d:
1. Drawings not to scale.
2. All dimensions are in millimeters.

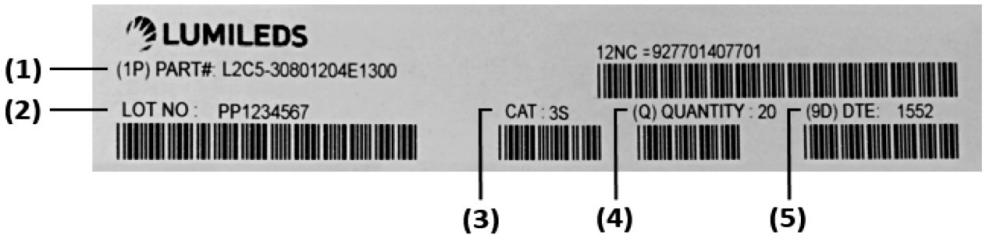

Figure 10. Example of a tube label for LUXEON CoB with CrispColor Technology.

Notes for Figure 10 - Tube Label descriptions for customer use:
Field labels not described are for Lumileds internal use only.
1. Lumileds part number.
2. Unique production lot identification number. This number is required for traceability purpose.
3. Product category code.
4. Number of LED emitters in a tube.
5. LED test date in YYWW format.

 ©2021 Lumileds Holding B.V. All rights reserved.

Inner Box

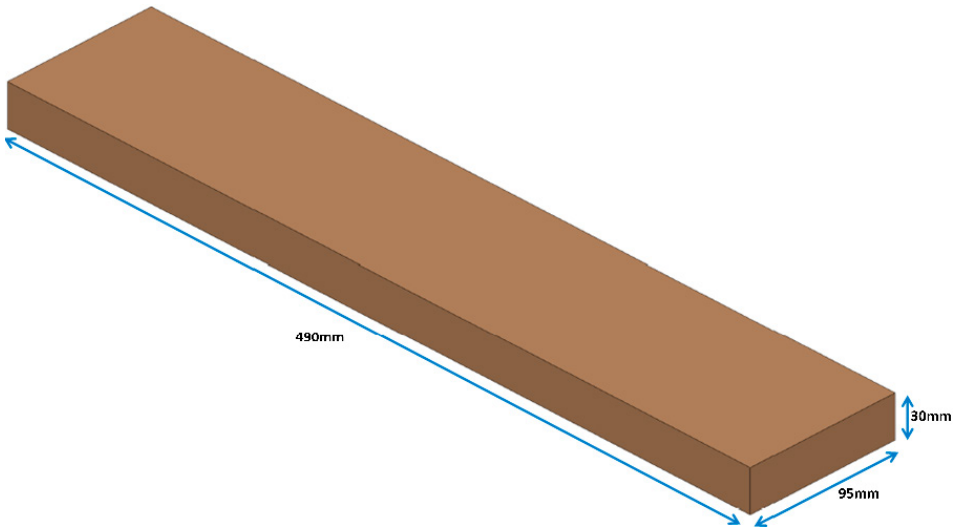

Figure 11. Dimensions for inner box packaging for LUXEON CoB with CrispColor Technology.

Table 7. Inner box information for LUXEON CoB with CrispColor Technology.

BOX TYPE	DIMENSIONS (mm)			AVERAGE WEIGHT (100pcs/box)	AVERAGE WEIGHT (50pcs/box)
	H	L	W		
Inner Box	30	490	95	0.340Kg	0.305Kg

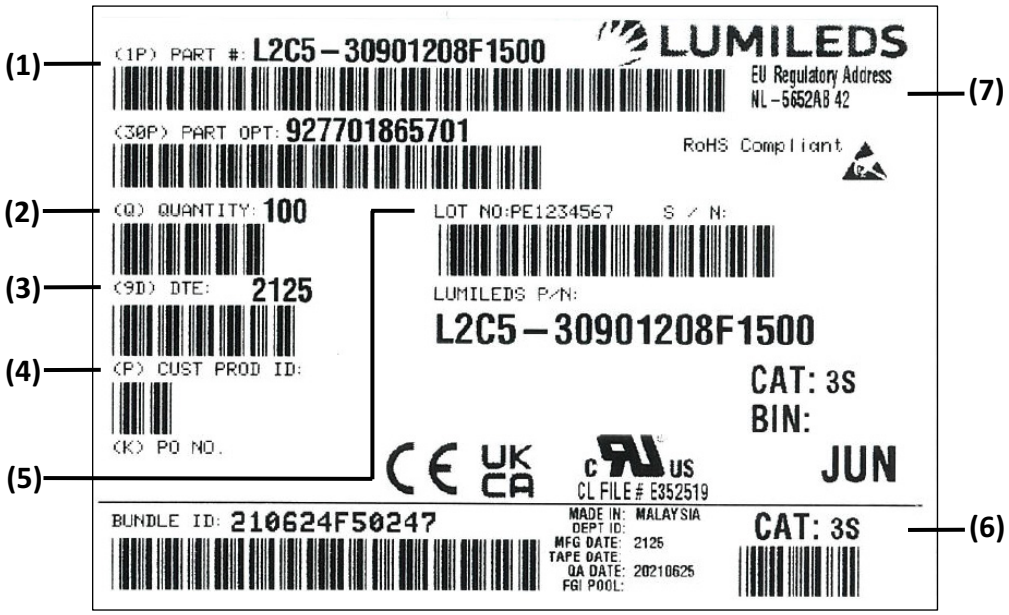

Figure 12. Example of inner box label for LUXEON CoB with CrispColor Technology.

Notes for Figure 12 – Inner Box Label descriptions for customer use:
Field labels not described are for Lumileds internal use only.

1. Lumileds part number.
2. Number of LED emitters in a box.
3. LED test date in YYWW format.
4. Customer part number for custom requests only.
5. Unique production lot identification number. This number is required for traceability purpose.
6. Product category code.
7. EU regulatory address.

 ©2021 Lumileds Holding B.V. All rights reserved.

Outer Box

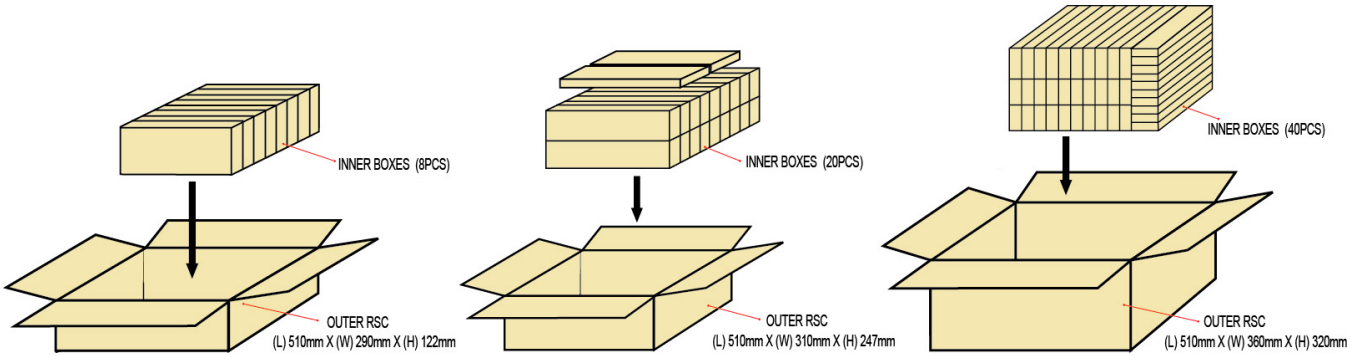

Figure 13. Dimensions for outer box packaging for LUXEON CoB with CrispColor Technology.

Table 8. Outer box information for LUXEON CoB with CrispColor Technology.

BOX TYPE	DIMENSIONS (mm)			MAXIMUM INNER BOXES PER OUTER BOX	MAXIMUM QUANTITY PER OUTER BOX	AVERAGE WEIGHT (100pcs/box)	AVERAGE WEIGHT (50pcs/box)
	H	L	W				
Outer Box 8 PCS	122	510	290	8	800	3.05Kg	2.77Kg
Outer Box 20 PCS	247	510	310	20	2000	7.55Kg	6.85Kg
Outer Box 40 PCS	320	510	360	40	4000	15.10Kg	13.70Kg

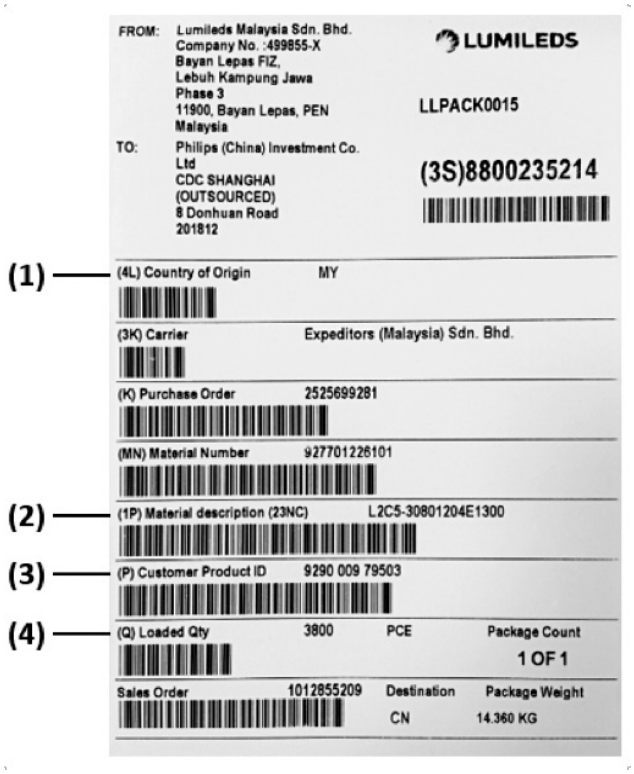

Figure 14. Example of outer box label for LUXEON CoB with CrispColor Technology.

Notes for Figure 14 – Outer Box Label descriptions for customer use:
Field labels not described are for Lumileds internal use only.
1. Country code of origin of manufacturing of parts (e.g. MY for Malaysia, CN for China) according to ISO 3166-1 alpha-2 document.
2. Lumileds part number.
3. Customer part number for custom requests only.
4. Total number of LED emitters in a shipment box.

 ©2021 Lumileds Holding B.V. All rights reserved.

About Lumileds

Companies developing automotive, mobile, IoT and illumination lighting applications need a partner who can collaborate with them to push the boundaries of light. With over 100 years of inventions and industry firsts, Lumileds is a global lighting solutions company that helps customers around the world deliver differentiated solutions to gain and maintain a competitive edge. As the inventor of Xenon technology, a pioneer in halogen lighting and the leader in high performance LEDs, Lumileds builds innovation, quality and reliability into its technology, products and every customer engagement. Together with its customers, Lumileds is making the world better, safer, more beautiful—with light.

To learn more about our lighting solutions, visit lumileds.com.

LUMILEDS

©2021 Lumileds Holding B.V. All rights reserved. LUXEON is a registered trademark of the Lumileds Holding B.V. in the United States and other countries.

lumileds.com

Neither Lumileds Holding B.V. nor its affiliates shall be liable for any kind of loss of data or any other damages, direct, indirect or consequential, resulting from the use of the provided information and data. Although Lumileds Holding B.V. and/or its affiliates have attempted to provide the most accurate information and data, the materials and services information and data are provided "as is," and neither Lumileds Holding B.V. nor its affiliates warrants or guarantees the contents and correctness of the provided information and data. Lumileds Holding B.V. and its affiliates reserve the right to make changes without notice. You as user agree to this disclaimer and user agreement with the download or use of the provided materials, information and data. A listing of Lumileds product/patent coverage may be accessed at lumileds.com/patents.

DS165 LUXEON CoB with CrispColor Technology
Prod 20210831