IS32FL3746B

18×4 DOTS MATRIX LED DRIVER WITH 12MHZ SPI

February 2020

GENERAL DESCRIPTION

The IS32FL3746B is a general purpose 18×n (n=1~4) LED Matrix programmed via 12MHz SPI interface. Each LED can be dimmed individually with 8-bit PWM data and 8-bit DC scaling data which allowing 256 steps of linear PWM dimming and 256 steps of DC current adjustable level.

Additionally each LED open state can be detected, IS32FL3746B store the open information in Open-Registers. The Open Registers allowing MCU to read out via SPI, inform MCU whether there are LEDs open or short LEDs.

The IS32FL3746B operates from 2.7V to 5.5V and features a very low shutdown and operational current.

IS32FL3746B is available in WFQFN-32 (5mm×5mm) and eTQFP-32 packages. It operates from 2.7V to 5.5V over the temperature range of -40°C to +125°C.

FEATURES

- Supply voltage range: 2.7V to 5.5V
- 18 current sinks
- Support 18×n (n=1~4) LED matrix configurations
- Accurate Color Rendition
  - 8-bit PWM
  - 8-bit Dot correction
  - 8-bit Global current adjust
- SDB rising edge reset SPI module
- 29kHz PWM frequency
- 12MHz SPI interface
- Individual open and short error detect function
- 180 degree phase delay operation to reduce power noise
- Spread spectrum
- De-Ghost
- WFQFN-32 (5mm×5mm) and eTQFP-32 packages
- AEC-Q100 Qualified

APPLICATIONS

- Automotive clusters
- Dashboards
- Automotive interiors

TYPICAL APPLICATION CIRCUIT

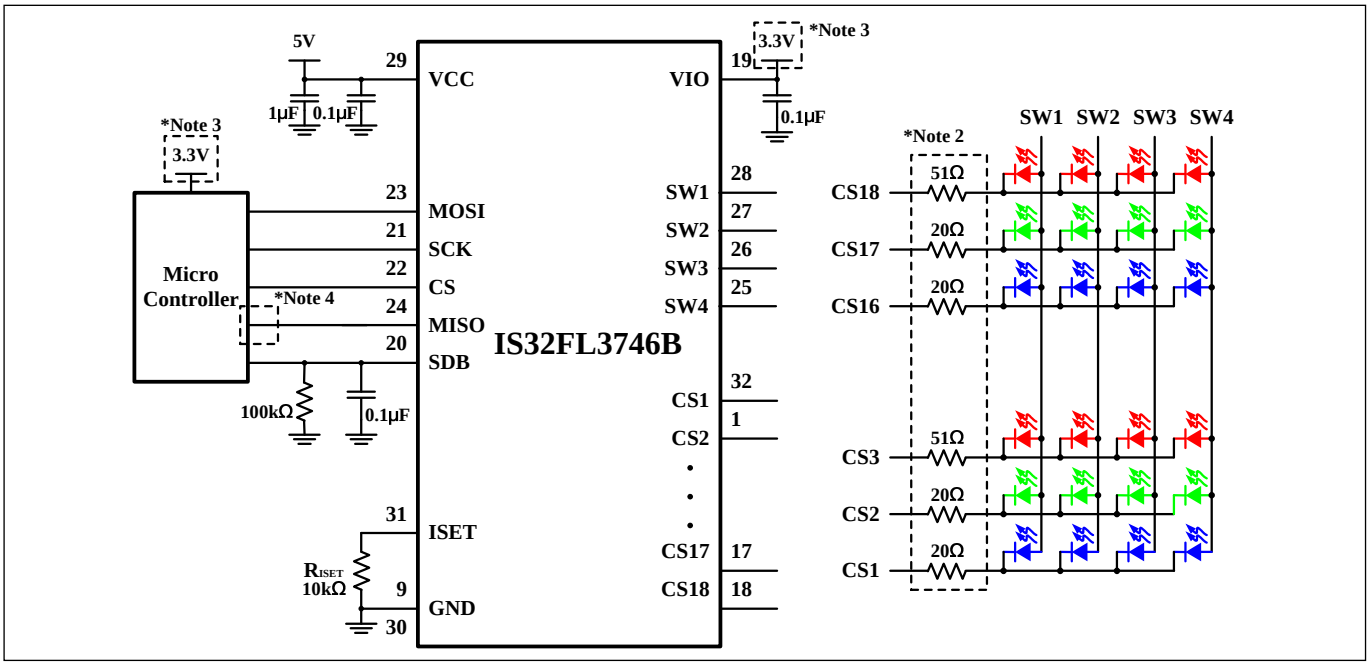

Figure 1 Typical Application Circuit: 24 RGBs

TYPICAL APPLICATION CIRCUIT (CONTINUED)

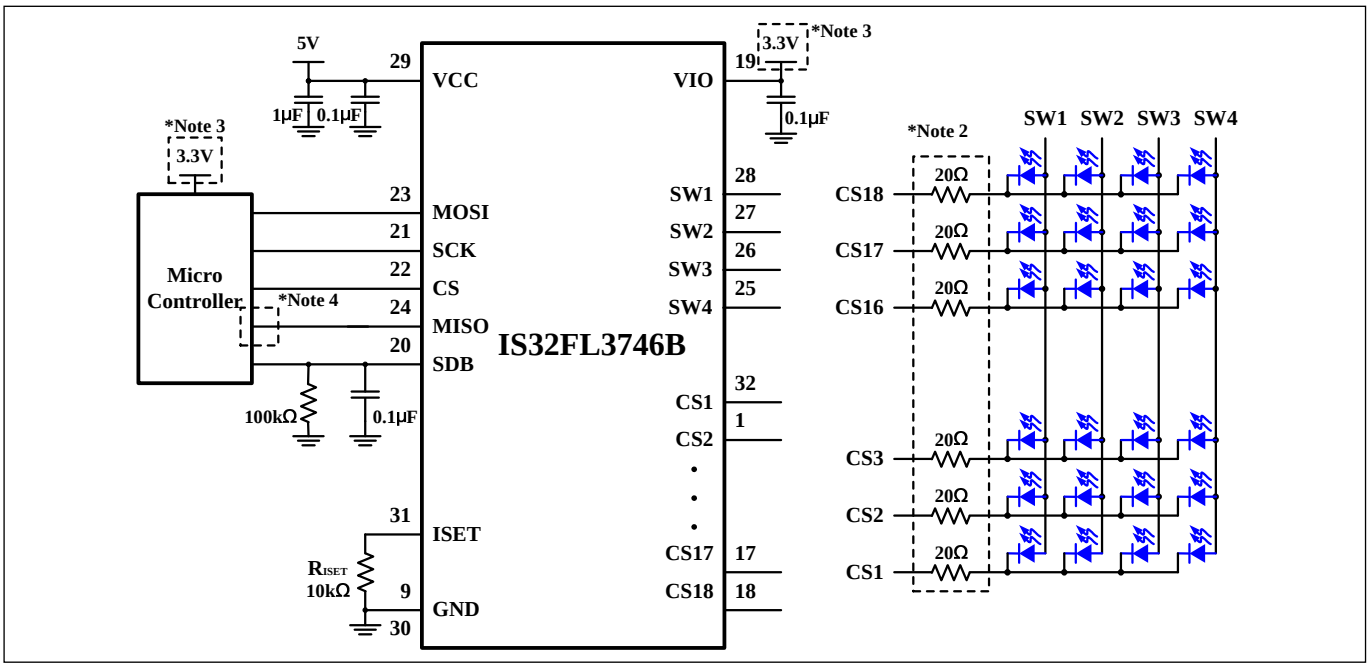

Figure 2 Typical Application Circuit: 72 Mono Color LEDs

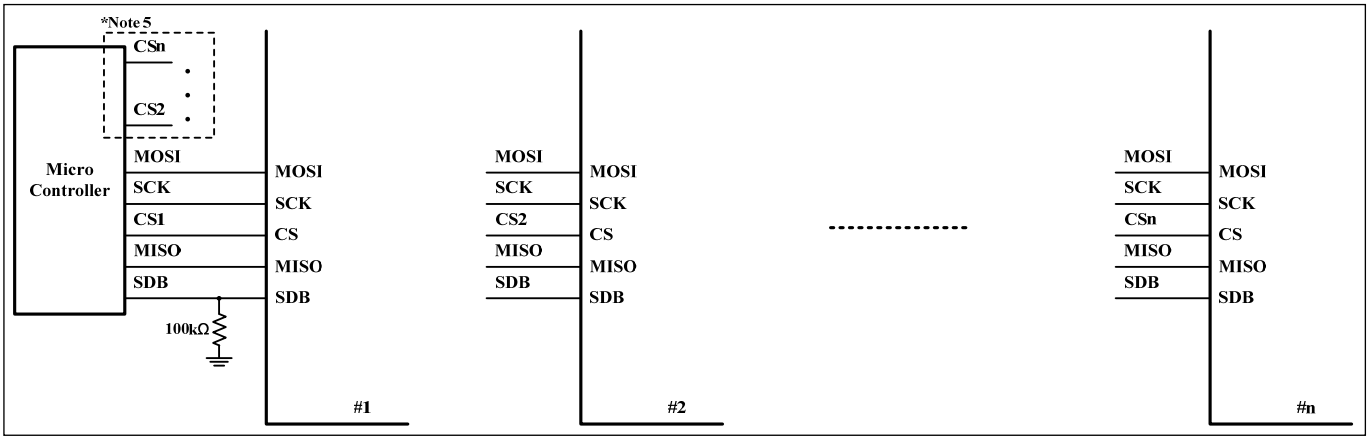

Figure 3 One MCU Control Multi-IS32FL3746B

Note 1: IC and LED should be placed far away from the antenna in order to prevent the EMI.
Note 2: These optional resistors are for offloading the thermal dissipation ($P=I^2R$) away from the IS32FL3746B.
Note 3: The V_{IH} of SPI bus should be same as VIO pin. VIO pin need to connect to a reference voltage and usually it is same as the VCC of MCU. If VCC of MCU is 1.8V, V_{IO}=1.8V, if VCC of MCU is 5V, V_{IO}=5V.
Note 4: MISO $V_{OH}=V_{IO}$.
Note 5: Each IS32FL3746B should have independent CS pin.

PIN CONFIGURATION

Package	Pin Configuration (Top View)
WFQFN-32	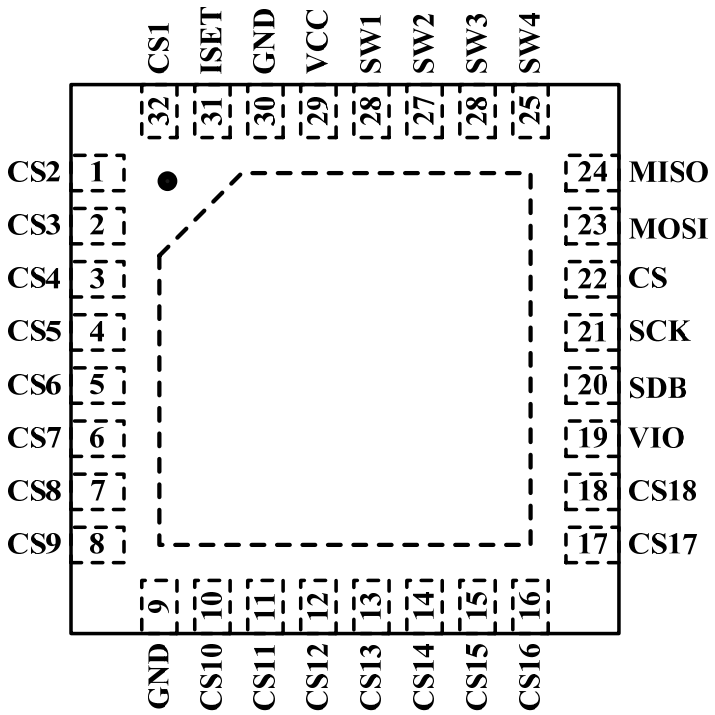
eTQFP-32	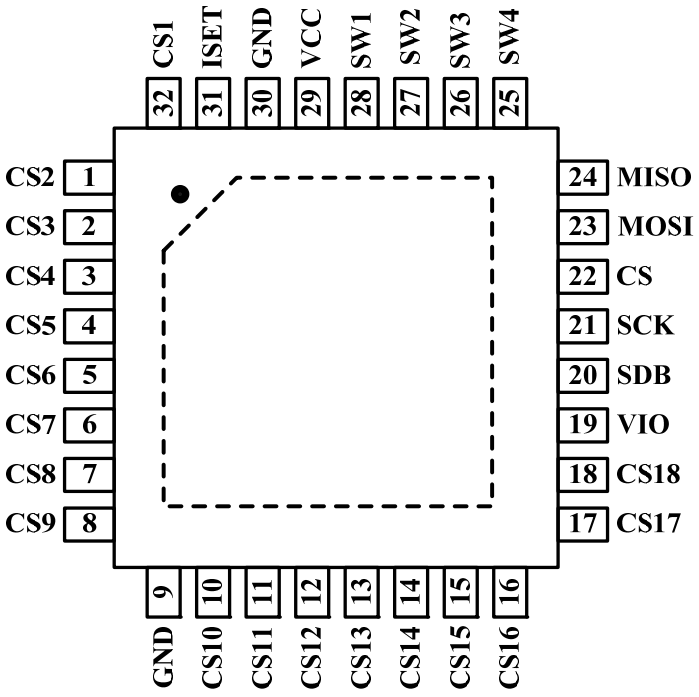

PIN DESCRIPTION

No.	Pin	Description
1~8, 10~18	CS2~CS18	Current sink pin for LED matrix.
9,30	GND	Ground.
19	VIO	Input logic reference voltage, can't be floated.
20	SDB	Shutdown pin.
21	SCK	SPI clock.
22	CS	CS of SPI.
23	MOSI	SPI input data.
24	MISO	MISO of SPI.
25~28	SW4~SW1	Power SW.
29	VCC	Power for current source SW and analog.
31	ISET	Set the maximum IOUT current.
32	CS1	Current sink pin for LED matrix.
	Thermal Pad	Need to connect to GND pins.

ORDERING INFORMATION

Automotive Range: -40°C to +125°C

Order Part No.	Package	QTY/Reel
IS32FL3746B-QWLA3-TR	WFQFN-32, Lead-free	2500
IS32FL3746B-TQLA3-TR	eTQFP-32, Lead-free	

Copyright © 2020 Lumissil Microsystems. All rights reserved. Lumissil Microsystems reserves the right to make changes to this specification and its products at any time without notice. Lumissil Microsystems assumes no liability arising out of the application or use of any information, products or services described herein. Customers are advised to obtain the latest version of this device specification before relying on any published information and before placing orders for products.

Lumissil Microsystems does not recommend the use of any of its products in life support applications where the failure or malfunction of the product can reasonably be expected to cause failure of the life support system or to significantly affect its safety or effectiveness. Products are not authorized for use in such applications unless Lumissil Microsystems receives written assurance to its satisfaction, that:

a.) the risk of injury or damage has been minimized;

b.) the user assume all such risks; and

c.) potential liability of Lumissil Microsystems is adequately protected under the circumstances

ABSOLUTE MAXIMUM RATINGS

Supply voltage, V_{CC}	-0.3V ~+6.0V
Voltage at any input pin	-0.3V ~ V_{CC}+0.3V
Maximum junction temperature, T_{JMAX}	+150°C
Storage temperature range, T_{STG}	-65°C ~+150°C
Operating temperature range, T_A=T_J	-40°C ~ +150°C
Package thermal resistance, junction to ambient (4 layer standard test PCB based on JESD 51-2A), θ_{JA}	37.6°C/W (WFQFN) 36°C/W (eTQFP)
Package thermal resistance, junction to thermal PAD (4 layer standard test PCB based on JESD 51-8), θ_{JP}	2.07°C/W (WFQFN) 7.5°C/W (eTQFP)
ESD (HBM) ESD (CDM)	±2kV ±750V

Note 6: Stresses beyond those listed under "Absolute Maximum Ratings" may cause permanent damage to the device. These are stress ratings only and functional operation of the device at these or any other condition beyond those indicated in the operational sections of the specifications is not implied. Exposure to absolute maximum rating conditions for extended periods may affect device reliability.

ELECTRICAL CHARACTERISTICS

The following specifications apply for V_{CC}= 5V, T_A= 25°C, unless otherwise noted.

Symbol	Parameter	Conditions	Min.	Typ.	Max.	Unit
V_{CC}	Supply voltage		2.7		5.5	V
I_{CC}	Quiescent power supply current	V_{SDB}=$V_{CC,}$ all LEDs off		2.3	3	mA
I_{SD}	Shutdown current	V_{SDB}=0V		2.8	4	μA
		V_{SDB}= V_{CC}, Configuration Register written "0000 0000		2.8	4	
I_{OUT}	Maximum constant current of CSx	R_{ISET}=10kΩ, GCC=0xFF, SL=0xFF	32.1	34.5	36.9	mA
I_{LED}	Average current on each LED I_{LED} = $I_{OUT(PEAK)}$/Duty(1/4.14)	R_{ISET}=10kΩ, GCC=0xFF, SL=0xFF	7.75	8.33	8.91	mA
V_{HR}	Current switch headroom voltage SWx	I_{SWITCH}=612mA R_{ISET}=10kΩ, GCC=0xFF, SL=0xFF		450	600	mV
	Current sink headroom voltage CSx	I_{SINK}=34mA, R_{ISET}=10kΩ, GCC=0xFF, SL=0xFF		250	450	
t_{SCAN}	Period of scanning		10	33	48	μs
t_{NOL1}	Non-overlap blanking time during scan, the SWx and CSy are all off during this time		0.1	0.83	1.5	μs
t_{NOL2}	Delay total time for CS1 to CS 18, during this time, the SWx is on but CSx is not all turned on	(Note 7)		0.3		μs
Logic Electrical Characteristics (SCK, MISO, MOSI, CS, SDB)						
V_{IL}	Logic "0" input voltage	V_{IO}=1.8V, V_{IO}=3.3V	GND		0.2V_{IO}	V
V_{IH}	Logic "1" input voltage	V_{IO}=1.8V, V_{IO}=3.3V	0.75V_{IO}		V_{IO}	V
V_{HYS}	Input Schmitt trigger hysteresis	V_{IO}=3.3V		0.2		V
V_{OH}	H level MISO pin output voltage	I_{OH}= -8mA, V_{IO}=1.8V, V_{IO}=3.3V	V_{IO}-0.4V		V_{IO}	V
V_{OL}	L level MISO pin output voltage	I_{OL}= 8mA, V_{IO}=1.8V, V_{IO}=3.3V	0		0.4	V
I_{IL}	Logic "0" input current	SDB=L, V_{INPUT}= L (Note 7)		5		nA
I_{IH}	Logic "1" input current	SDB=L, V_{INPUT}= H (Note 7)		5		nA

DIGITAL INPUT SPI SWITCHING CHARACTERISTICS (NOTE 7)

Symbol	Parameter	Min.	Typ.	Max.	Units
f_C	Clock frequency	-		12	MHz
t_{SLCH}	CS active set-up time	34			ns
t_{SHCH}	CS not active set-up time	17			ns
t_{SHSL}	CS detect time	167			ns
t_{CHSH}	CS active hold time	34			ns
t_{CHSL}	CS not active hold time	17			ns
t_{CH}	Clock high time	34			ns
t_{CL}	Clock low time	34			ns
t_{CLCH}	Clock rise time			9	ns
t_{CHCL}	Clock fall time			9	ns
t_{DVCH}	Data in set-up time	7			ns
t_{CHDX}	Data in hold time	9			ns
t_{SHQZ}	Output disable time			34	ns
t_{CLQV}	Clock low to output valid			39	ns
t_{CLQX}	Output hold time	0			ns
t_{QLQH}	Output rise time			17	ns
t_{QLQH}	Output fall time			17	ns

Note 7: Guaranteed by design.

FUNCTIONAL BLOCK DIAGRAM

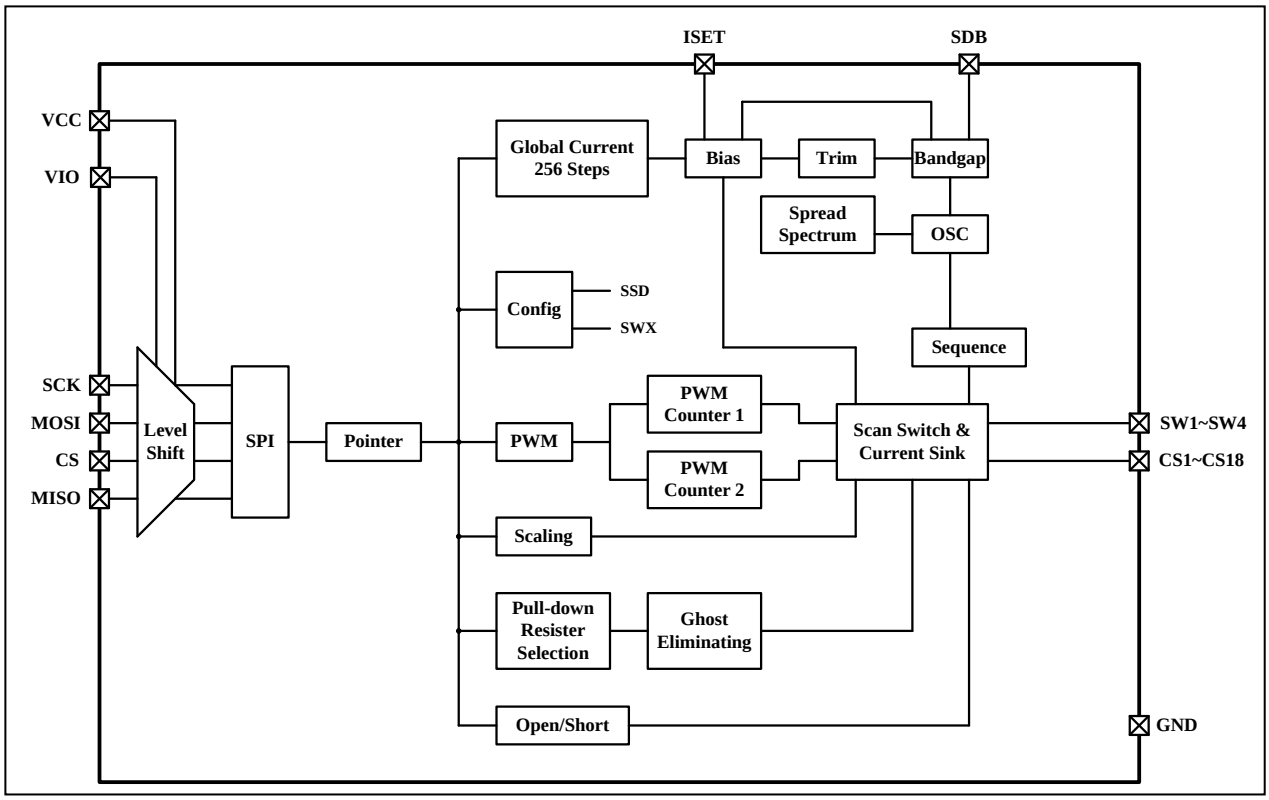

DETAILED DESCRIPTION

SPI INTERFACE

IS32FL3746B uses a SPI protocol to control the chip's function with four wires: CS, SCK, MOSI and MISO. SPI transfer starts form CS pin from high to low controlled by Master (Microcontroller), and IS32FL3746B latches data when clock rising.

SPI data format is 8-bit length. The first command byte composite of 1-bit R/W bit, 3-bit chip ID bit and 4-bit page bit. The command byte must be sent first, and is followed by register address byte then the register data. If the R/W bit is "0", it will be write operation and Master (Micro-controller) can write the register data into the register.

The maximum SCK frequency supported in IS32FL3746B is 12MHz.

Table 1 SPI Command Byte

Name	R/W	ID bit	Page No.
Bit	D7	D6:D4	D3:D0
Value	0: Write 1: Read	100	0x00: Point to Page 0 0x01: Point to Page 1

ADDRESS AUTO INCREMENT

To write multiple bytes of data into IS32FL3746B, load the address of the data register that the first data byte is intended for. During the 8th rising edge of receiving the data byte, the internal address pointer will increment by one. The next data byte sent to IS32FL3746B will be placed in the new address, and so on. The auto increment of the address will continue as long as data continues to be written to IS32FL3746B (Figure 7).

READING OPERATION

Page 0~Page 1 registers can be read by SPI.

To read the registers of Page 0 thru Page 1, The D7 of the Command Byte need to be set to "1" and select the page number. If read one register, as shown in figure 8, read the MISO data after sending the command byte and register address. If read more registers, as shown in figure 9, the register address will auto increase during the 8th rising edge of receiving the last bit of the previous register data.

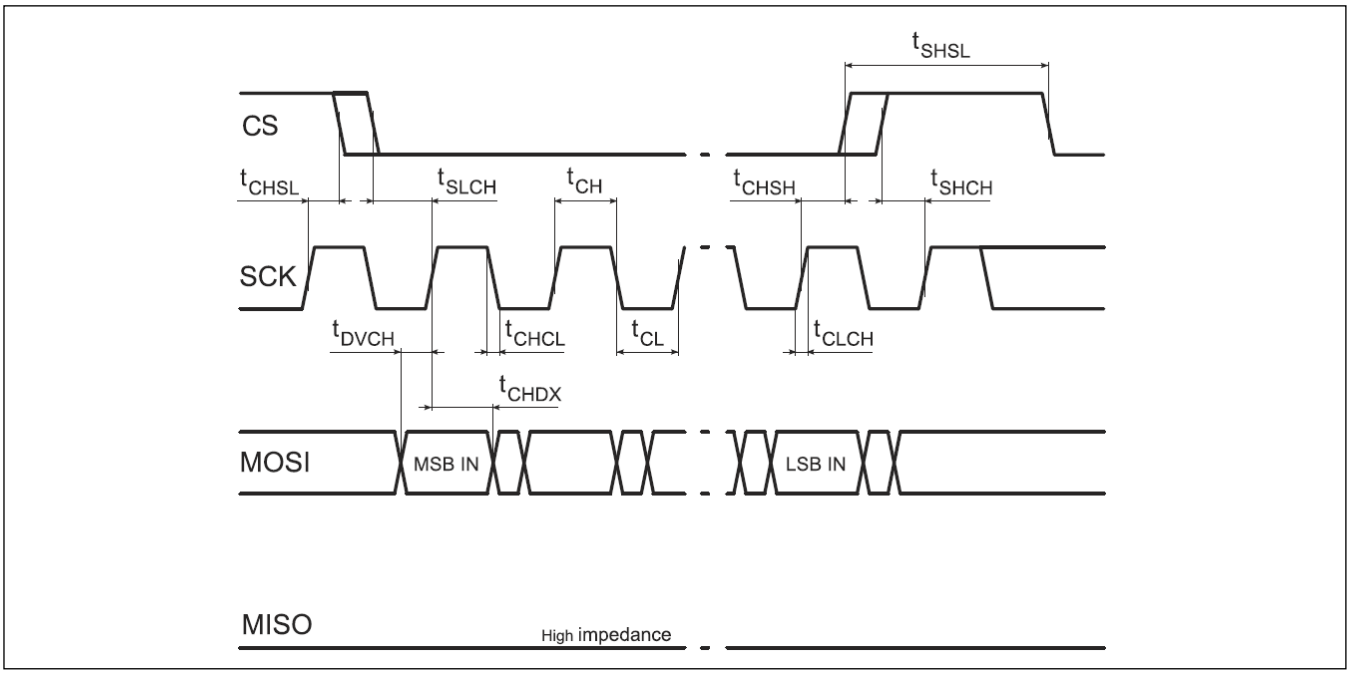

Figure 4 SPI Input Timing

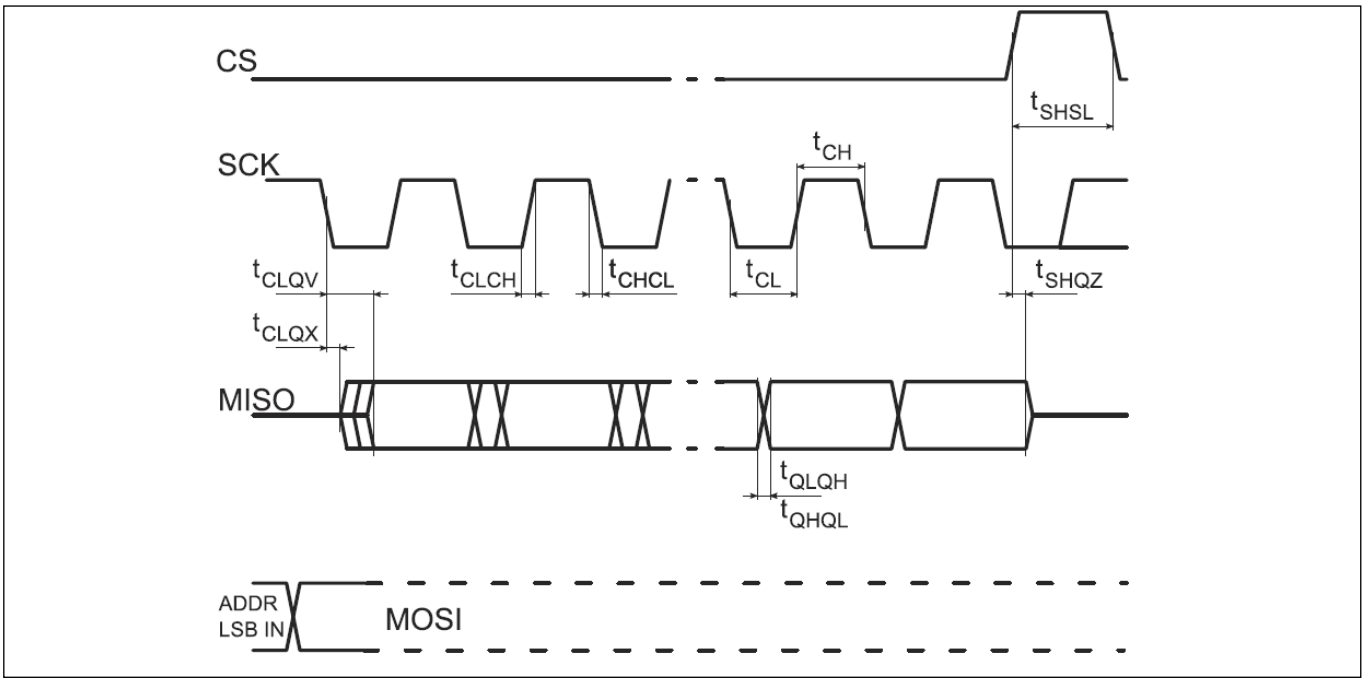

Figure 5 SPI Input Timing

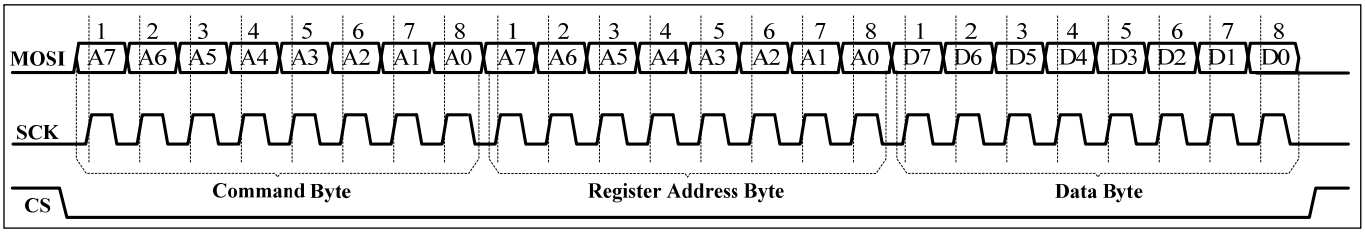

Figure 6 SPI writing to IS32FL3746B (Typical)

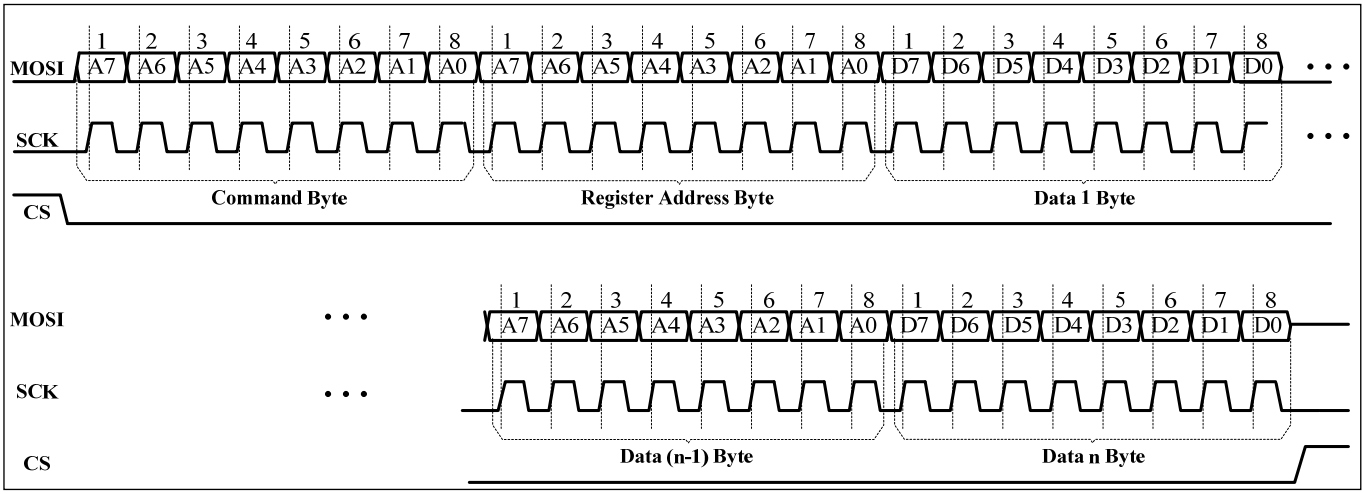

Figure 7 SPI writing to IS32FL3746B (Automatic address increment)

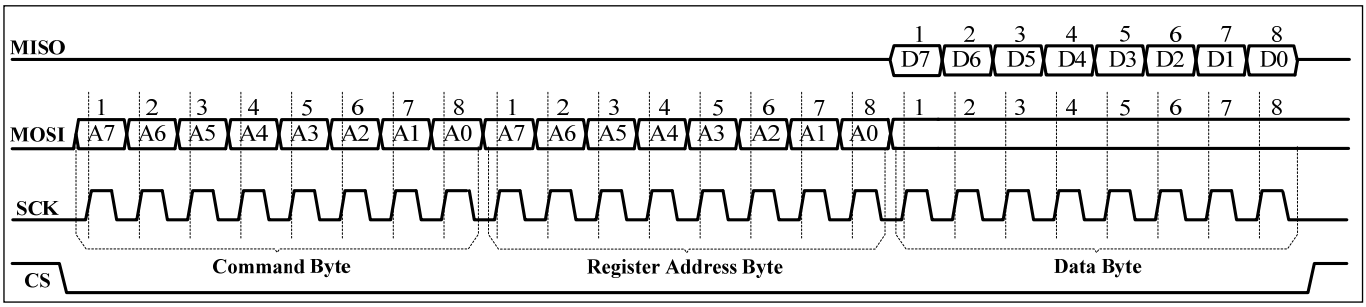

Figure 8 SPI Reading From IS32FL3746B (Typical)

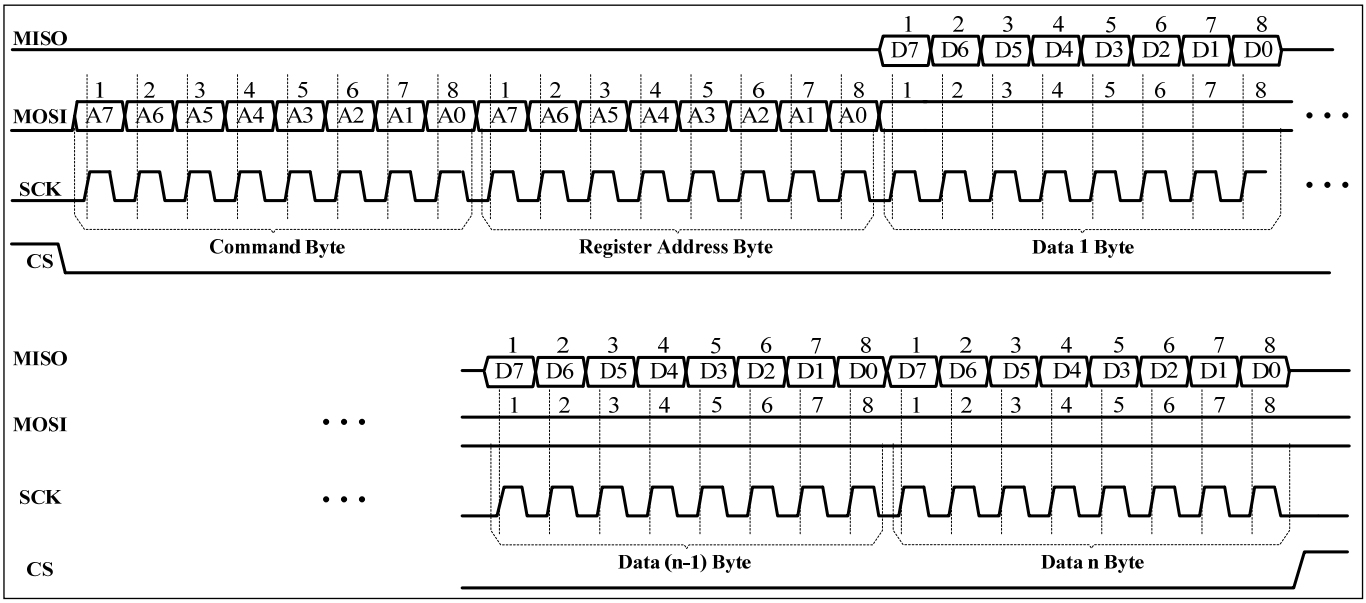

Figure 9 SPI Reading From IS32FL3746B (Automatic Address Increment)

Table 2 Register Definition

Address	Name	Function	Table	R/W	Default
PG0 (0x40): PWM Register					
01h~48h	PWM Register	Set PWM for each LED	3	R/W	0000 0000
PG1 (0x41): LED Scaling Register					
01h~48h	Scaling Register	Set Scaling for each LED	4	R/W	0000 0000
50h	Configuration Register	Configure the operation mode	6	R/W	0000 0000
51h	Global Current Control Register	Set the global current	7	R/W	0000 0000
52h	Pull Down/Up Resistor Selection Register	Set the pull down resistor for SWx and pull up resistor for CSy	8	R/W	0011 0011
53h~5Eh	Open/Short Register	Store the open information	9	R	0000 0000
5Fh	Temperature Status	Store the temperature point of the IC	10	R/W	0000 0000
60h	Spread Spectrum Register	Spread spectrum function enable	11	R/W	0000 0000
8Fh	Reset Register	Reset all register to POR state	-	W	0000 0000
E0h	PWM Frequency Enable Register	Enable PWM frequency setting	12	W	0000 0000
E2h	PWM Frequency Setting Register	Set the PWM frequency	13	W	0000 0000

Page 0 (PG0, Page No. = 0x40): PWM Register

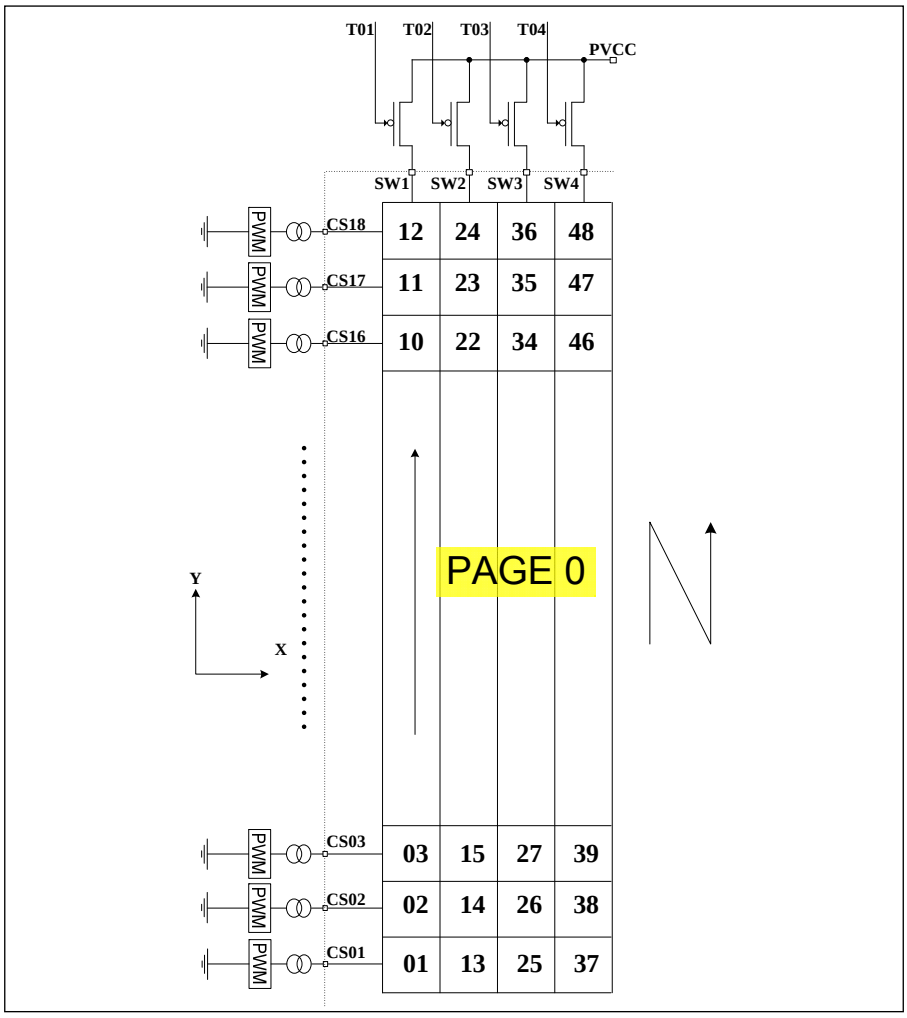

Figure 10 PWM Register

Table 3 PG0: 01h ~ 48h PWM Register

Bit	D7:D0
Name	PWM
Default	0000 0000

Each dot has a byte to modulate the PWM duty in 256 steps.

The value of the PWM Registers decides the average current of each LED noted I_{LED}.

I_{LED} computed by Formula (1):

$$I_{LED} = \frac{PWM}{256} \times I_{OUT\,(PEAK)} \times Duty \quad (1)$$

$$PWM = \sum_{n=0}^{7} D[n] \cdot 2^n$$

Where Duty is the duty cycle of SWx,

$$Duty = \frac{33\mu s}{(33\mu s + 0.83\mu + 0.3s)} \times \frac{1}{4} = \frac{1}{4.14} \quad (2)$$

I_{OUT} is the output current of CSy (y=1~18),

$$I_{OUT(PEAK)} = \frac{343}{R_{ISET}} \times \frac{GCC}{256} \times \frac{SL}{256} \quad (3)$$

GCC is the Global Current Control Register (PG1, 51h) value, SL is the Scaling Register value as Table 9 and R_{ISET} is the external resistor of ISET pin. D[n] stands for the individual bit value, 1 or 0, in location n.

For example: if D7:D0=1011 0101 (0xB5, 181), GCC=1111 1111, R_{ISET} =10kΩ, SL=1111 1111:

$$I_{LED} = \frac{343}{10\,k\Omega} \times \frac{255}{256} \times \frac{255}{256} \times \frac{1}{4.14} \times \frac{181}{256}$$

Page 1 (PG1, Page No.= 0x41): LED Scaling Register

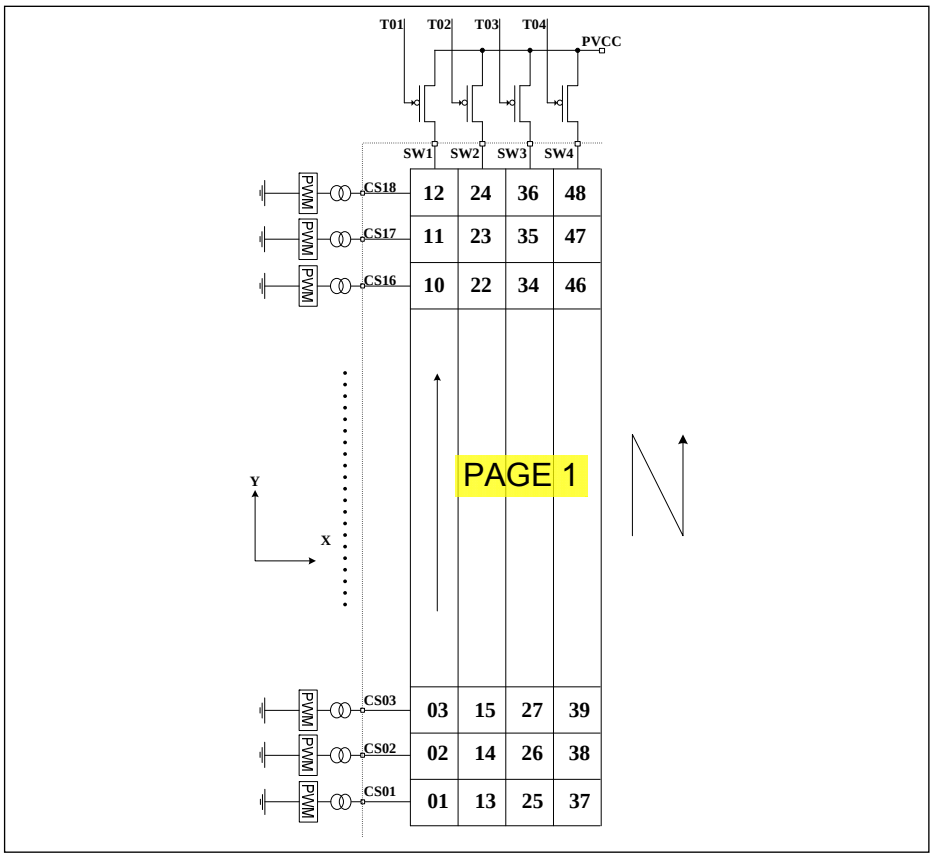

Figure 11 Scaling Register

Table 4 PG1: 01h ~ 48h Scaling Register

Bit	D7:D0
Name	SL
Default	0000 0000

Scaling register control the DC output current of each dot. Each dot has a byte to modulate the scaling in 256 steps.

The value of the Scaling Register decides the peak current of each LED noted $I_{OUT(PEAK)}$.

$I_{OUT(PEAK)}$ computed by Formula (3):

$$I_{OUT(PEAK)} = \frac{343}{R_{ISET}} \times \frac{GCC}{256} \times \frac{SL}{256} \qquad (3)$$

$$SL = \sum_{n=0}^{7} D[n] \cdot 2^n$$

I_{OUT} is the output current of CSy (y=1~18), GCC is the Global Current Control Register (PG1, 51h) value and R_{ISET} is the external resistor of ISET pin. D[n] stands for the individual bit value, 1 or 0, in location n.

For example: if R_{ISET}=10kΩ, GCC=1111 1111, SL=0111 1111:

$$SL = \sum_{n=0}^{7} D[n] \cdot 2^n = 127$$

$$I_{OUT} = \frac{343}{10k\Omega} \times \frac{255}{256} \times \frac{127}{256} = 16.8mA$$

$$I_{LED} = 16.8mA \times \frac{1}{4.14} \times \frac{PWM}{256}$$

Table 5 Page 1 (PG1, Page No. = 0x41): Function Register

Register	Name	Function	Table	R/W	Default
50h	Configuration Register	Configure the operation mode	6	R/W	0000 0000
51h	Global Current Control Register	Set the global current	7	R/W	0000 0000
52h	Pull Down/Up Resistor Selection Register	Set the pull down resistor for SWx and pull up resistor for CSy	8	R/W	0011 0011
53h~5Eh	Open/Short Register	Store the open/short information	9	R	0000 0000
5Fh	Temperature Status	Store the temperature point of the IC	10	R/W	0000 0000
60h	Spread Spectrum Register	Spread spectrum function enable	11	R/W	0000 0000
8Fh	Reset Register	Reset all register to POR state	-	W	0000 0000
E0h	PWM Frequency Enable Register	Enable PWM frequency setting	12	W	0000 0000
E2h	PWM Frequency Setting Register	Set the PWM frequency	13	W	0000 0000

Table 6 50h Configuration Register

Bit	D7:D4	D3	D2:D1	D0
Name	SWS	-	OSDE	SSD
Default	0000	0	00	0

The Configuration Register sets operating mode of IS32FL3746B.

SSD Software Shutdown Control
0 Software shutdown
1 Normal operation

OSDE Open Short Detection Enable
00 Disable open/short detection
01/11 Enable open detection
10 Enable short detection

SWS SWx Setting
0000 SW1~SW4, 1/4
0001 SW1~SW3, 1/3, SW4 no-active
0010 SW1~SW2, 1/2, SW3~SW4 no-active
0011 All CSx work as current sinks only, no scan
Others SW1~SW4, 1/4

When OSDE set to “01”, open detection will be trigger once, the user could trigger open detection again by set OSDE from “00” to “01”.

When OSDE set “10”, short detection will be trigger once, the user could trigger short detection again by set OSDE from “00” to “10”.

When SSD is “0”, IS32FL3746B works in software shutdown mode and to normal operate the SSD bit should set to “1”.

SWS control the duty cycle of the SWx, default mode is 1/4.

Table 7 51h Global Current Control Register

Bit	D7:D0
Name	GCC
Default	0000 0000

The Global Current Control Register modulates all CSy (y=1~18) DC current which is noted as I_{OUT} in 256 steps.

I_{OUT} is computed by the Formula (3):

$$I_{OUT(PEAK)} = \frac{343}{R_{ISET}} \times \frac{GCC}{256} \times \frac{SL}{256} \qquad (3)$$

$$GCC = \sum_{n=0}^{7} D[n] \cdot 2^n$$

Where D[n] stands for the individual bit value, 1 or 0, in location n.

Table 8 52h Pull Down/Up Resistor Selection Register

Bit	D7	D6:D4	D3	D2:D0
Name	PHC	SWPDR	-	CSPUR
Default	0	011	0	011

Set pull down resistor for SWx and pull up resistor for CSy.

PHC Phase choice
0 0 degree phase delay
1 180 degree phase delay

SWPDR SWx Pull down Resistor Selection Bit

000 No pull down resistor
001 0.5kΩ only in SWx off time
010 1.0kΩ only in SWx off time
011 2.0kΩ only in SWx off time
100 1.0kΩ all the time
101 2.0kΩ all the time
110 4.0kΩ all the time
111 8.0kΩ all the time

CSPUR CSy Pull up Resistor Selection Bit

000 No pull up resistor
001 0.5kΩ only in CSx off time
010 1.0kΩ only in CSx off time
011 2.0kΩ only in CSx off time
100 1.0kΩ all the time
101 2.0kΩ all the time
110 4.0kΩ all the time
111 8.0kΩ all the time

Table 9 53h~5Eh Open/Short Register (Read Only)

Bit	D7:D6	D5:D0
Name	-	CS18:CS13, CS12:CS07,CS06:CS01
Default	00	00 0000

When OSDE (PG1, 50h) is set to “01”, open detection will be trigger once, and the open information will be stored at 53h~5Eh.

When OSDE (PG1, 50h) set to “10”, short detection will be trigger once, and the short information will be stored at 53h~5Eh.

Before set OSDE, the GCC should set to 0x0F~0x40 and the 52h should set to 0x00.

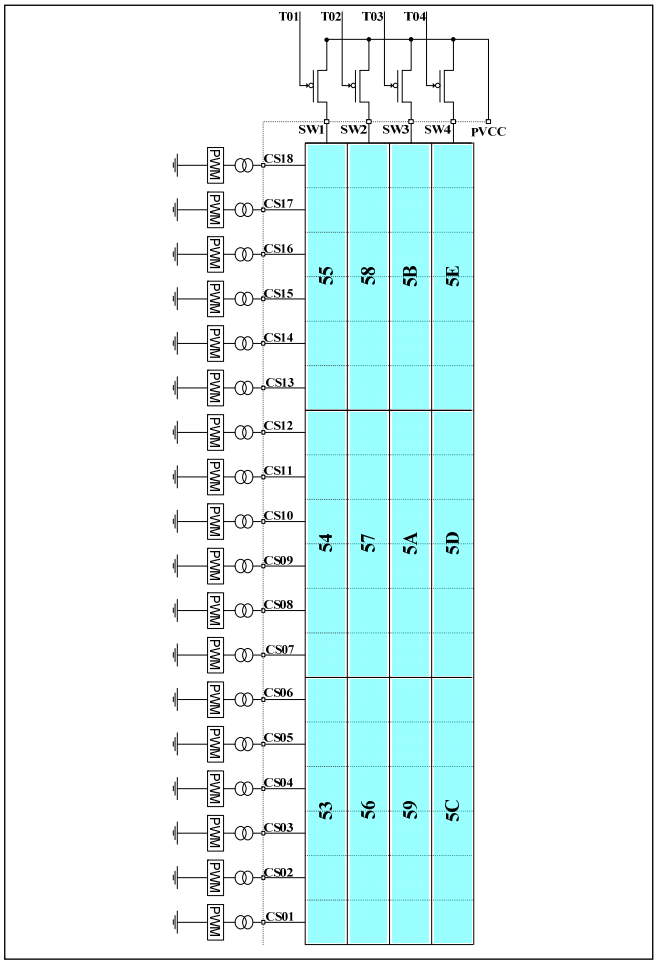

Figure 12 Open/Short Register

Table 10 5Fh Temperature Status

Bit	D7:D4	D3:D2	D1:D0
Name	-	TS	TROF
Default	0000	00	00

TS store the temperature point of the IC. If the IC temperature reaches the temperature point the IC will trigger the thermal roll off and will decrease the current as TROF set percentage.

TROF percentage of output current

00 100%
01 75%
10 55%
11 30%

TS Temperature Point, Thermal roll off start point

00 140°C
01 120°C
10 100°C
11 90°C

Table 11 60h Spread Spectrum Register

Bit	D7:D6	D4	D3:D2	D1:D0
Name	-	SSP	RNG	CLT
Default	00	0	00	00

When SSP enable, the spread spectrum function will be enabled and the RNG & CLT bits will adjust the range and cycle time of spread spectrum function.

SSP Spread spectrum function enable
0 Disable
1 Enable

RNG Spread spectrum range
00 ±5%
01 ±15%
10 ±24%
11 ±34%

CLT Spread spectrum cycle time
00 ±1980μs
01 ±1200μs
10 ±820μs
11 ±660μs

8Fh Reset Register

Once user writes the Reset Register with 0xAE, IS32FL3746B will reset all the IS32FL3746B registers to their default value. On initial power-up, the IS32FL3746B registers are reset to their default values for a blank display.

Table 12 E0h PWM Frequency Enable Register

Bit	D7:D1	D0
Name	-	PFEN
Default	0000 000	0

The PWM Frequency Enable Register enables or disables to change the PWM frequency.
If PFEN= “1”, user can change the PWM frequency by modifying the E2h register.

PFEN PWM Frequency Enable
0 Disable
1 Enable

Table 13 E2h PWM Frequency Setting Register

Bit	D7:D5	D4:D0
Name	PF	-
Default	000	0 0000

PWM Frequency Setting Register is used to set the PWM frequency.

PF	PWM Frequency
000/111	29kHz
001	14.5kHz
010	7.25kHz
011	3.63kHz
100	1.81kHz
101	906Hz
110	453Hz

APPLICATION INFORMATION

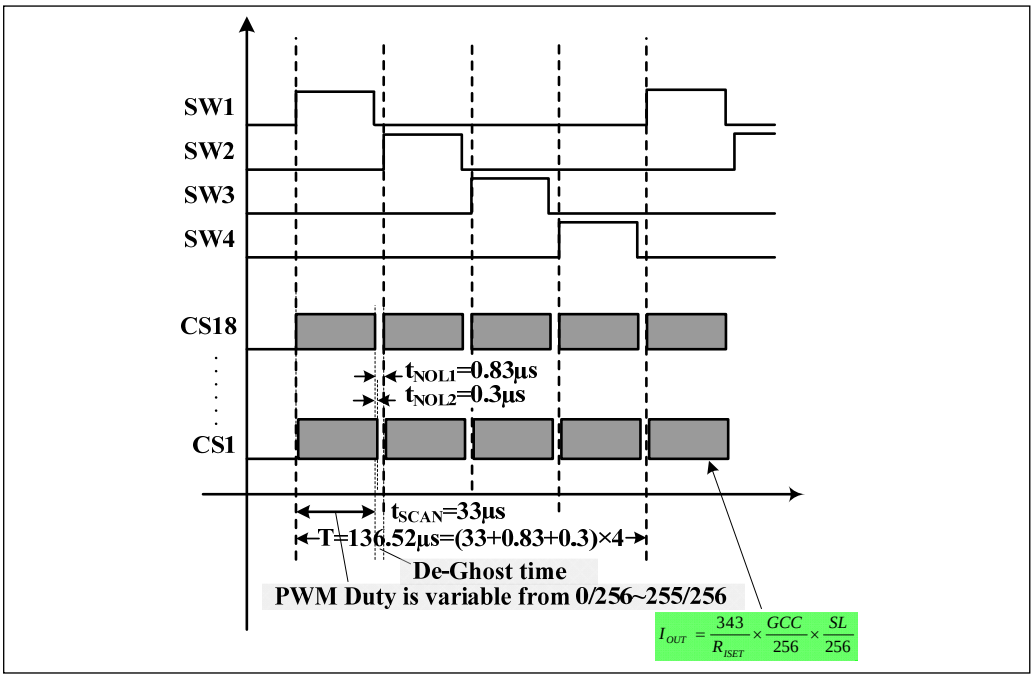

Figure 13 Scanning Timing

SCANING TIMING

As shown in Figure 13, the SW1~SW4 is turned on by serial, LED is driven 4 by 4 within the SWx (x=1~4) on time (SWx, x=1~4 is source and it is high when LED on) , including the non-overlap blanking time during scan, the duty cycle of SWx (active high, x=1~4) is:

$$Duty=\frac{33\mu s}{(33\mu s+0.83\mu s+0.3\mu s)}\times\frac{1}{4}=\frac{1}{4.14} \qquad (2)$$

Where 33μs is t_{SCAN}, the period of scanning, 0.83μs is t_{NOL1}, 0.3μs is t_{NOL2}, the non-overlap time and CSy(y=1~18) delay time.

PWM CONTROL

After setting the I_{OUT} and GCC, the brightness of each LEDs (LED average current (I_{LED})) can be modulated with 256 steps by PWM Register, as described in Formula (1).

$$I_{LED}=\frac{PWM}{256}\times I_{OUT(PEAK)}\times Duty \qquad (1)$$

Where PWM is PWM Registers (PG0, 01h~48h /PG0) data showing in Table 6.

For example, in Figure 1, if R_{ISET}= 10kΩ, PWM= 255, and GCC= 255, SL= 255, then

$$I_{OUT(PEAK)}=\frac{343}{10k\Omega}\times\frac{255}{256}\times\frac{255}{256}=34mA$$

$$I_{LED}=I_{OUT(PEAK)}\times\frac{1}{4.14}\times\frac{PWM}{256}$$

Writing new data continuously to the registers can modulate the brightness of the LEDs to achieve a breathing effect.

GAMMA CORRECTION

In order to perform a better visual LED breathing effect we recommend using a gamma corrected PWM value to set the LED intensity. This results in a reduced number of steps for the LED intensity setting, but causes the change in intensity to appear more linear to the human eye.

Gamma correction, also known as gamma compression or encoding, is used to encode linear luminance to match the non-linear characteristics of display. Since the IS32FL3746B can modulate the brightness of the LEDs with 256 steps, a gamma correction function can be applied when computing each subsequent LED intensity setting such that the changes in brightness matches the human eye's brightness curve.

Table 14 32 Gamma Steps with 256 PWM Steps

C(0)	C(1)	C(2)	C(3)	C(4)	C(5)	C(6)	C(7)
0	1	2	4	6	10	13	18
C(8)	C(9)	C(10)	C(11)	C(12)	C(13)	C(14)	C(15)
22	28	33	39	46	53	61	69
C(16)	C(17)	C(18)	C(19)	C(20)	C(21)	C(22)	C(23)
78	86	96	106	116	126	138	149
C(24)	C(25)	C(26)	C(27)	C(28)	C(29)	C(30)	C(31)
161	173	186	199	212	226	240	255

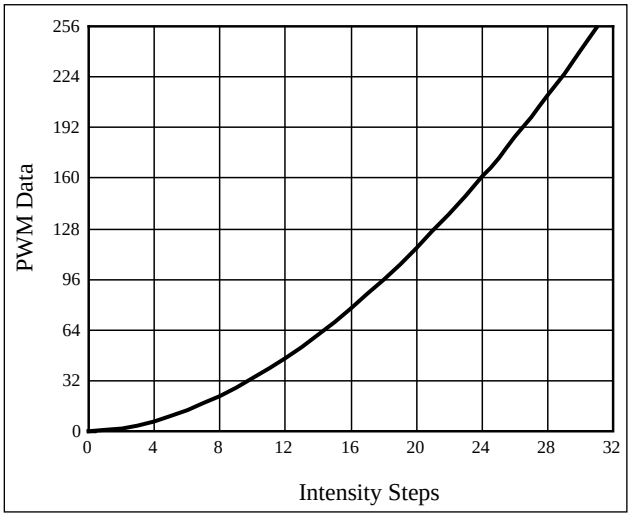

Figure 14 Gamma Correction (32 Steps)

Choosing more gamma steps provides for a more continuous looking breathing effect. This is useful for very long breathing cycles. The recommended configuration is defined by the breath cycle T. When T=1s, choose 32 gamma steps, when T=2s, choose 64 gamma steps. The user must decide the final number of gamma steps not only by the LED itself, but also based on the visual performance of the finished product.

Table 15 64 Gamma Steps with 256 PWM Steps

C(0)	C(1)	C(2)	C(3)	C(4)	C(5)	C(6)	C(7)
0	1	2	3	4	5	6	7
C(8)	C(9)	C(10)	C(11)	C(12)	C(13)	C(14)	C(15)
8	10	12	14	16	18	20	22
C(16)	C(17)	C(18)	C(19)	C(20)	C(21)	C(22)	C(23)
24	26	29	32	35	38	41	44
C(24)	C(25)	C(26)	C(27)	C(28)	C(29)	C(30)	C(31)
47	50	53	57	61	65	69	73
C(32)	C(33)	C(34)	C(35)	C(36)	C(37)	C(38)	C(39)
77	81	85	89	94	99	104	109
C(40)	C(41)	C(42)	C(43)	C(44)	C(45)	C(46)	C(47)
114	119	124	129	134	140	146	152
C(48)	C(49)	C(50)	C(51)	C(52)	C(53)	C(54)	C(55)
158	164	170	176	182	188	195	202
C(56)	C(57)	C(58)	C(59)	C(60)	C(61)	C(62)	C(63)
209	216	223	230	237	244	251	255

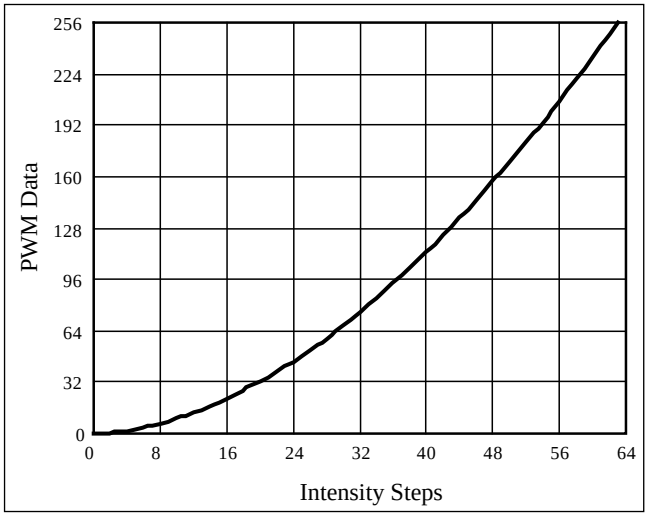

Figure 15 Gamma Correction (64 Steps)

Note 8: The data of 32 gamma steps is the standard value and the data of 64 gamma steps is the recommended value.

OPERATING MODE

IS32FL3746B can only operate in PWM Mode. The brightness of each LED can be modulated with 256 steps by PWM registers. For example, if the data in PWM Register is “0000 0100”, then the PWM is the fourth step.

Writing new data continuously to the registers can modulate the brightness of the LEDs to achieve a breathing effect.

OPEN/SHORT DETECT FUNCTION

IS32FL3746B has open and short detect bit for each LED.

By setting the OSD bits of the Configuration Register (PG1, 50h) from “00” to “01” or ’10’, the LED Open/short Register will start to store the open/short information and after at least 2 scanning cycles and the MCU can get the open/short information by reading the 53h~5Eh, for those dots are turned off via LED Scaling Registers (PG1, 01h~48h), the open/short data will not get refreshed when setting the OSD bit of the Configuration Register.

To get the correct open and short information, two configurations need to set before setting the OSD bits:

1 0x0F≤ GCC≤ 0x40
2 Register 52h= 0x00

Where GCC is the Global Current Control Register (PG1, 51h) and 52h is the Pull Down/UP Resistor Selection Register and set to 0x00 is to disable the SWx pull-down and CSy pull-up function.

The detect action is one-off event and each time before reading out the open/short information, the OSDE bit of the Configuration Register (PG1, 50h) need to be set from “00” to “01”/“10” (clear before set operation).

DE-GHOST FUNCTION

The “ghost” term is used to describe the behavior of an LED that should be OFF but instead glows dimly when another LED is turned ON. A ghosting effect typically can occur when multiplexing LEDs. In matrix architecture any parasitic capacitance found in the constant-current outputs or the PCB traces to the LEDs may provide sufficient current to dimly light an LED to create a ghosting effect.

To prevent this LED ghost effect, the IS32FL3746B has integrated Pull down resistors for each SWx (x=1~4) and Pull up resistors for each CSy (y=1~18). Select the right SWx Pull down resistor (PG1, 52h) and CSy Pull up resistor (PG1, 52h) which eliminates the ghost LED for a particular matrix layout configuration.

Typically, selecting the 8kΩ will be sufficient to eliminate the LED ghost phenomenon.

The SWx Pull down resistors and CSy Pull up resistors are active only when the CSy/SWx output working the OFF state and therefore no power is lost through these resistors.

When IS32FL3746B works in hardware shutdown mode, the de-ghost function should be disabled, otherwise it will be extra about 1μA shutdown current.

SPI RESET

The SPI will be reset if the SDB pin is pull-high from 0V to logic high, at the operating SDB rising edge, the SPI operation is not allowed.

SHUTDOWN MODE

Shutdown mode can be used as a means of reducing power consumption. During shutdown mode all registers retain their data.

Software Shutdown

By setting SSD bit of the Configuration Register (PG1, 50h) to “0”, the IS32FL3746B will operate in software shutdown mode. When the IS32FL3746B is in software shutdown, all current sources are switched off, so that the matrix is blanked. All registers can be operated. Typical current consume is 2.8μA.

Hardware Shutdown

The chip enters hardware shutdown when the SDB pin is pulled low. All analog circuits are disabled during hardware shutdown, typical the current consume is 2.8μA.

The chip releases hardware shutdown when the SDB pin is pulled high. During hardware shutdown state Function Register can be operated.

If V_{CC} has risk drop below 1.75V but above 0.1V during SDB pulled low, please re-initialize all Function Registers before SDB pulled high.

LAYOUT

The IS32FL3746B consumes lots of power so good PCB layout will help improve the reliability of the chip. Please consider below factors when layout the PCB.

Power Supply Lines

When designing the PCB layout pattern, the first step should consider about the supply line and GND connection, especially those traces with high current, also the digital and analog blocks’ supply line and GND should be separated to avoid the noise from digital block affect the analog block.

At least one 0.1μF capacitor, if possible with a 0.47μF or 1μF capacitor is recommended to connected to the ground at each power supply pins of the chip, and it needs to close to the chip and the ground net of the capacitor should be well connected to the GND plane.

R_{ISET}

R_{ISET} should be close to the chip and the ground side should well connect to the GND plane.

Thermal Consideration

The over temperature of the chip may result in deterioration of the properties of the chip. IS32FL3746B has thermal pad but the chip could be very hot if power is very large. So do consider the ground area connects to the GND pins and thermal pad. Other traces should keep away and ensure the ground area below the package is integrated, and the back layer should be connected to the thermal pad thru 9 or 16 vias to be maximized the area size of ground plane.

Current Rating Example

For a R_{ISET}=10kΩ application, the current rating for each net is as follows:

• VCC and SWx pins= 34mA ×18=612mA, recommend trace width: 0.2032mm~0.5mm.

• CSy pins= 34mA, recommend trace width: 0.1016mm~0.254mm.

• All other pins< 3mA, recommend trace width: 0.1016mm~0.254mm.

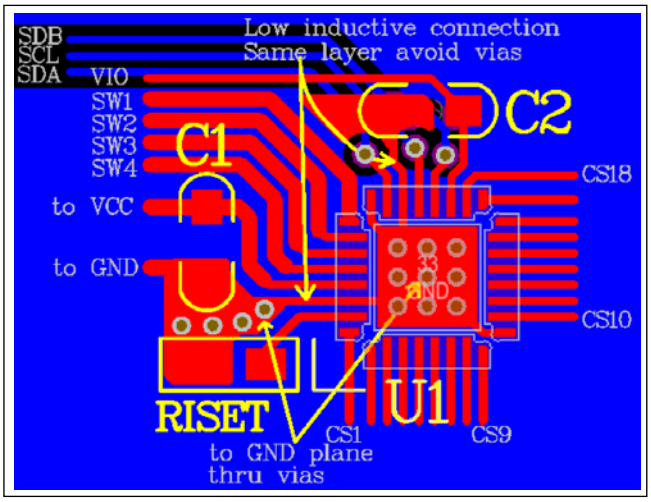

Figure 16 Layout Example (WFQFN-32)

CLASSIFICATION REFLOW PROFILES

Profile Feature	Pb-Free Assembly
Preheat & Soak Temperature min (Tsmin) Temperature max (Tsmax) Time (Tsmin to Tsmax) (ts)	150°C 200°C 60-120 seconds
Average ramp-up rate (Tsmax to Tp)	3°C/second max.
Liquidous temperature (TL) Time at liquidous (tL)	217°C 60-150 seconds
Peak package body temperature (Tp)*	Max 260°C
Time (tp)** within 5°C of the specified classification temperature (Tc)	Max 30 seconds
Average ramp-down rate (Tp to Tsmax)	6°C/second max.
Time 25°C to peak temperature	8 minutes max.

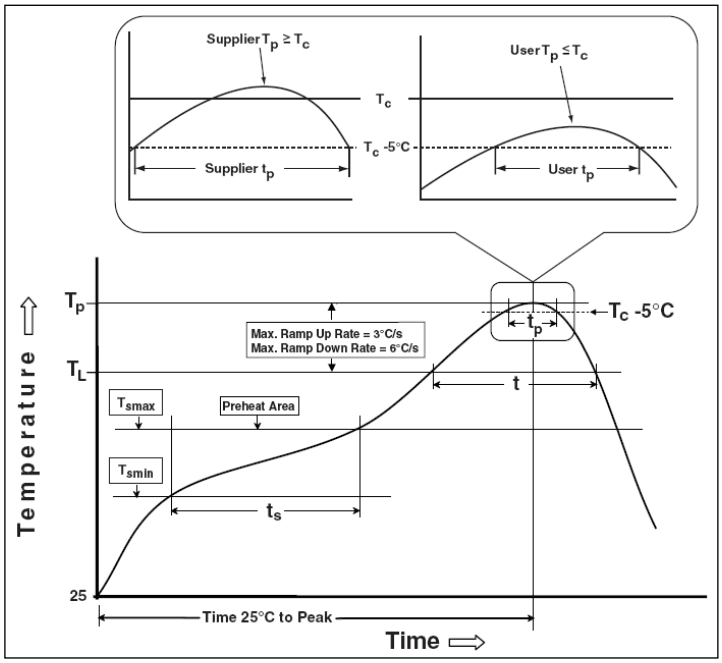

Figure 17 Classification Profile

PACKAGE INFORMATION

WFQFN-32

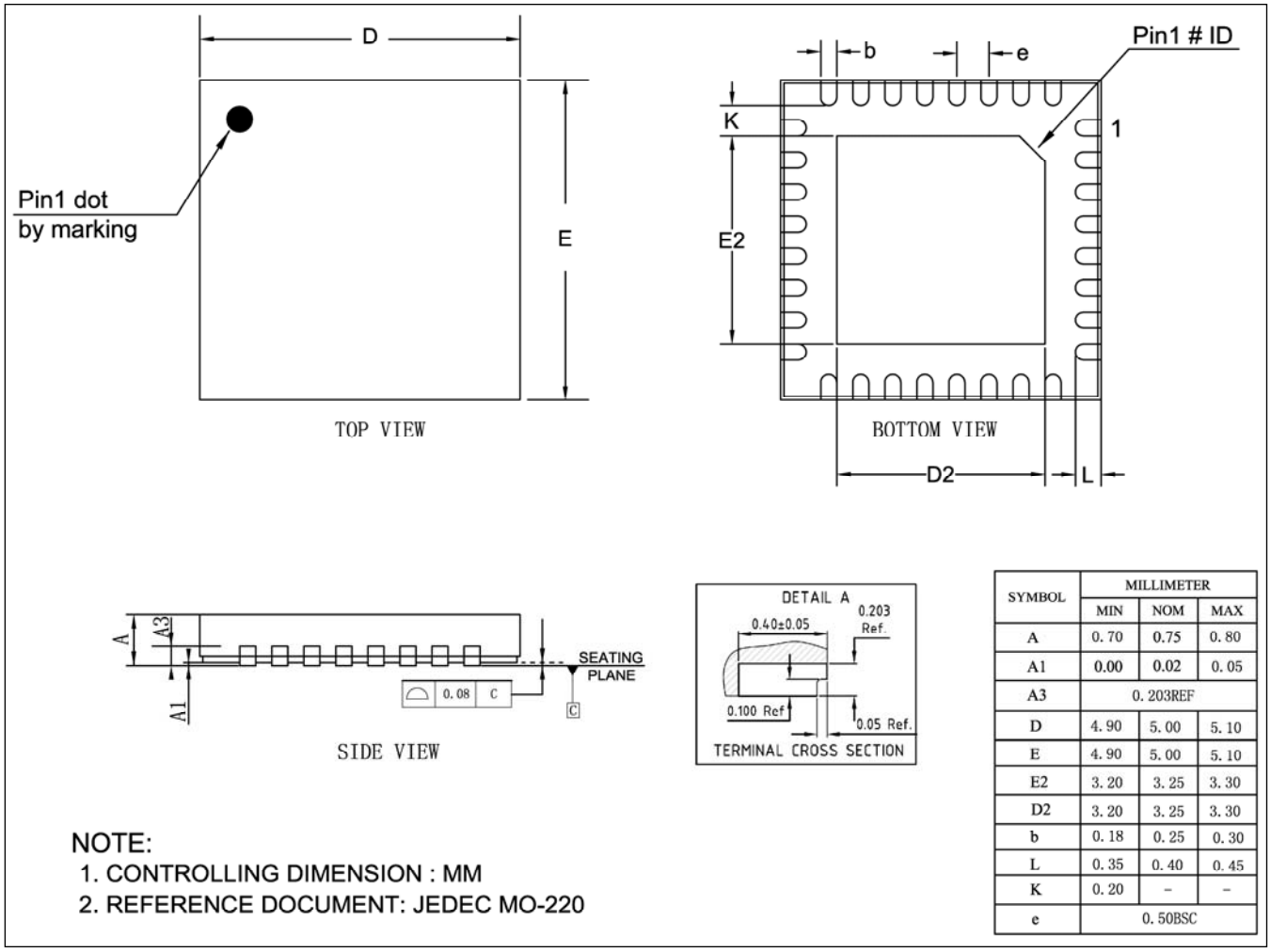

SYMBOL	MILLIMETER		
	MIN	NOM	MAX
A	0.70	0.75	0.80
A1	0.00	0.02	0.05
A3		0.203REF	
D	4.90	5.00	5.10
E	4.90	5.00	5.10
E2	3.20	3.25	3.30
D2	3.20	3.25	3.30
b	0.18	0.25	0.30
L	0.35	0.40	0.45
K	0.20	–	–
e		0.50BSC	

NOTE:
1. CONTROLLING DIMENSION : MM
2. REFERENCE DOCUMENT: JEDEC MO-220

eTQFP-32

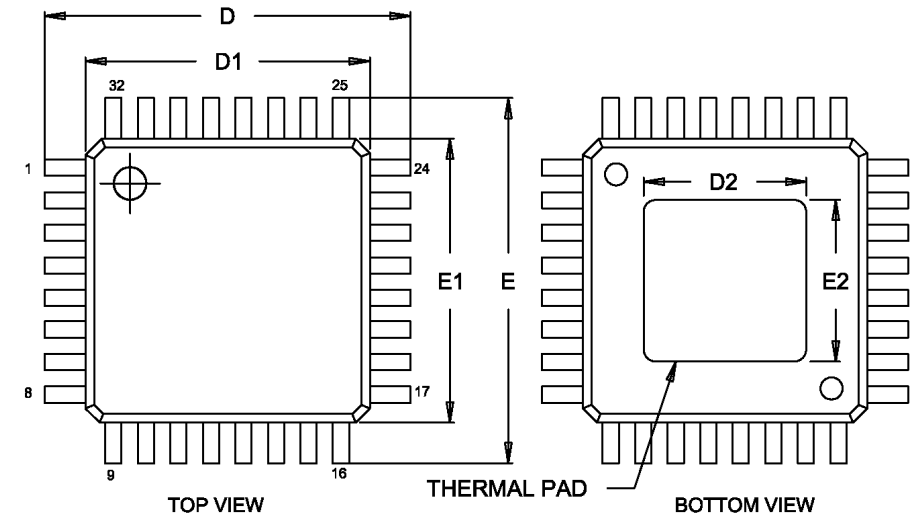

SYMBOL	MILLIMETER		
	MIN	NOM	MAX
A	—	—	1.20
A1	0.05	—	0.15
A2	0.95	1.00	1.05
D		9.00 BSC	
D1		7.00 BSC	
D2	3.19	—	3.90
E		9.00 BSC	
E1		7.00 BSC	
E2	3.19	—	3.90
L	0.45	—	0.75
b	0.30	—	0.45
e		0.80 BSC	
c	0.09	—	0.20
θ	0°	3.5°	7°

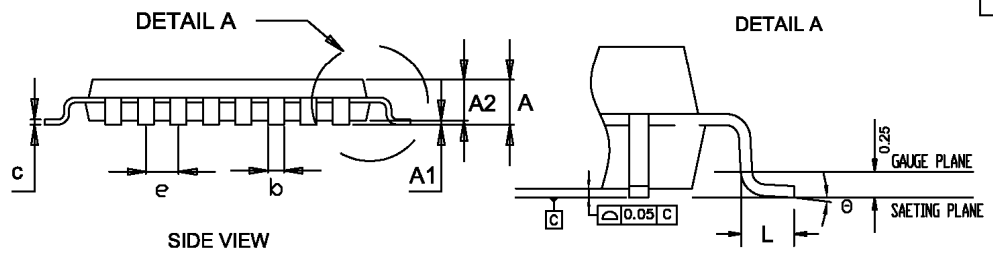

NOTE:
1. CONTROLLING DIMENSION : MM
2. REFERENCE DOCUMENT: JEDEC MS-026

RECOMMENDED LAND PATTERN

WFQFN-32

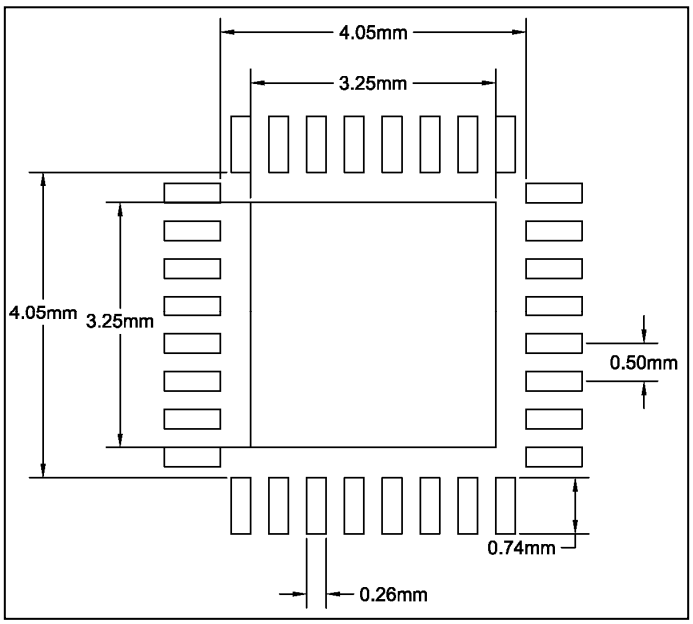

eTQFP-32

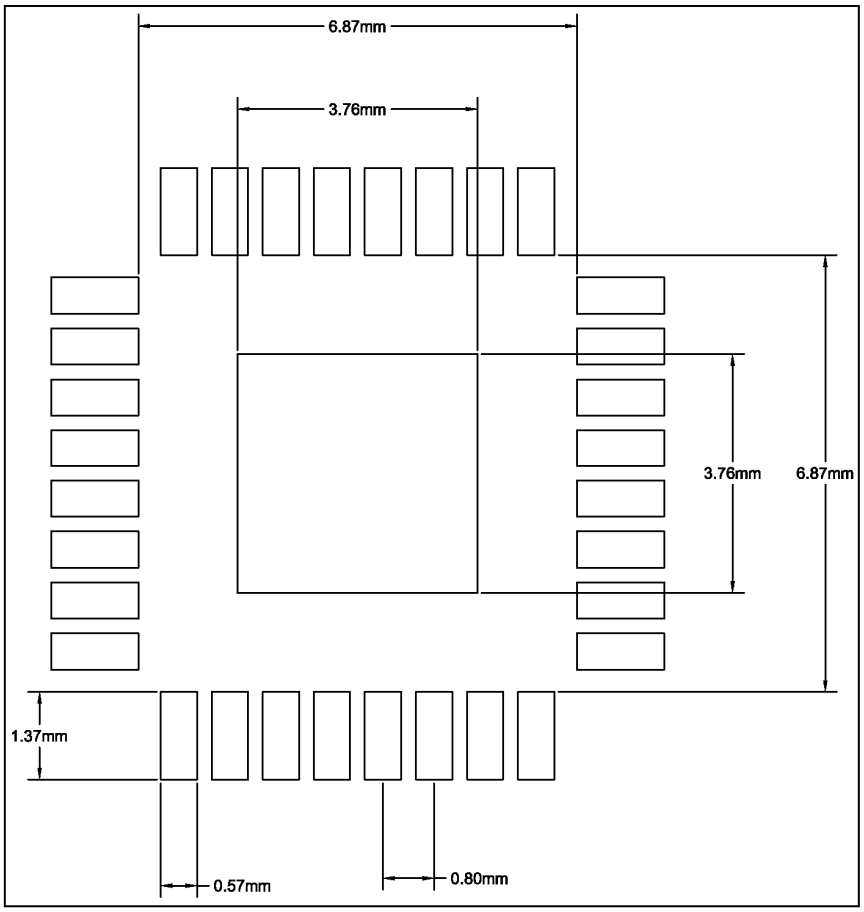

Note:

1. Land pattern complies to IPC-7351.
2. All dimensions in MM.
3. This document (including dimensions, notes & specs) is a recommendation based on typical circuit board manufacturing parameters. Since land pattern design depends on many factors unknown (eg. User's board manufacturing specs), user must determine suitability for use.

REVISION HISTORY

Revision	Detail Information	Date
A	Initial release	2020.01.02