M77 / M77C

Double-Balanced Mixer

Rev. V3

Features

- LO 7 TO 15 GHz
- RF 8 TO 12.5 GHz
- IF DC TO 2.5 GHz
- LO DRIVE: +10 dBm (NOMINAL)
- LOW NOISE FIGURE

Description

The M77 is a double balanced mixer, designed for use in military, commercial and test equipment applications. The design utilizes Schottky ring quad diodes and broadband soft dielectric and ferrite baluns to attain excellent performance. This mixer can also be used as a phase detector and/or bi-phase modulator since the IF port is DC coupled to the diodes. The use of high temperature solder and welded assembly processes used internally makes it ideal for use in manual, semi-automated assembly. Environmental screening available to MIL-STD-883, MIL-STD-202, or MIL-DTL-28837, consult factory.

Product Image

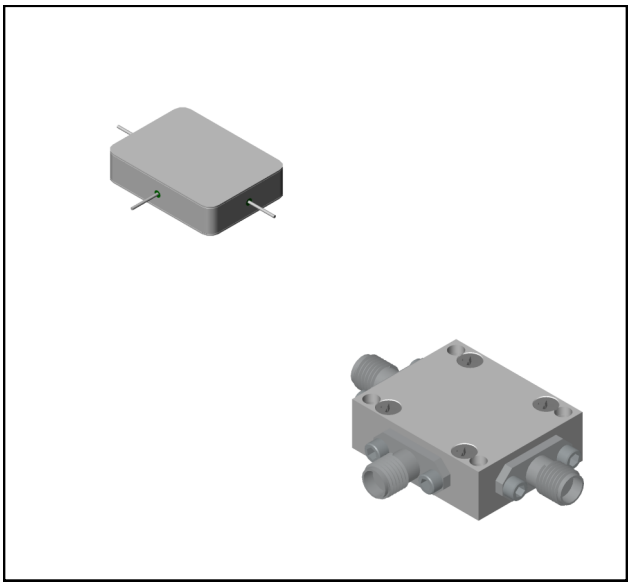

Ordering Information

Part Number	Package
M77	Minpac
M77C	SMA Connectorized

Electrical Specifications: $Z_0 = 50\Omega$ Lo = +10 dBm (Downconverter application only)

Parameter	Test Conditions	Units	Typical	Guaranteed	
				+25ºC	-54º to +85ºC
SSB Conversion Loss (max) & SSB Noise Figure (max)	fR = 8 to 12.5 GHz, fL = 7 to 13.5 GHz, fI = 0.03 to 1 GHz fR = 8 to 12.5 GHz, fL = 7 to 14.5 GHz, fI = 1 to 2 GHz fR = 8 to 12.5 GHz, fL = 7 to 15 GHz, fI = 2 to 2.5 GHz	dB dB dB	5.0 5.5 6.0	7.0 7.5 8.0	7.5 8.0 8.5
Isolation, L to R (min)	fL = 7 to 15 GHz fL = 8 to 12 GHz	dB dB	35 35	20 20	18 18
Isolation, L to I (min)	fL = 7 to 14 GHz fL = 14 to 15 GHz	dB dB	30 20	15 10	13 8
1 dB Conversion Comp.	fL = +10 dBm	dBm	+4		
Input IP3	fR1=10 GHz at –6 dBm,fR2=10.01GHz at –6 dBm, fL = 11 GHz at = +10 dBm	dBm	+15		

M/A-COM Technology Solutions Inc. (MACOM) and its affiliates reserve the right to make changes to the product(s) or information contained herein without notice.
Visit www.macom.com for additional data sheets and product information.

For further information and support please visit:
https://www.macom.com/support

Typical Performance Curves

Conversion Loss Vs. LO Drive

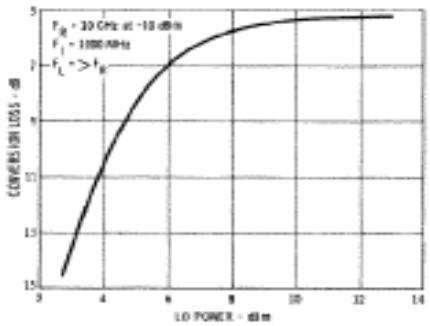

Conversion Loss vs. RF Input Power

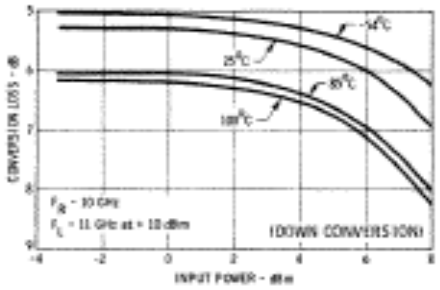

Conversion Loss vs. Frequency

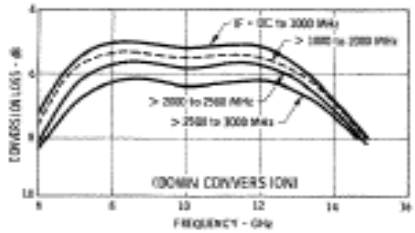

Isolation vs. Frequency

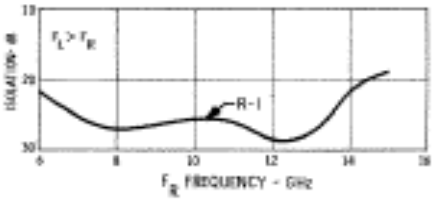

Isolation vs. Frequency

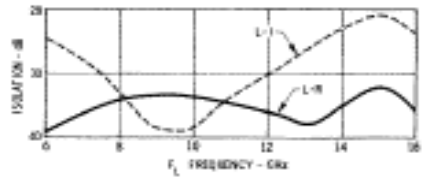

R-Port VSWR vs. Frequency

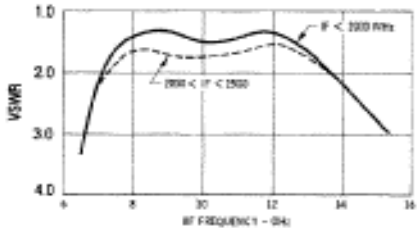

Conversion Loss vs. Output Frequency

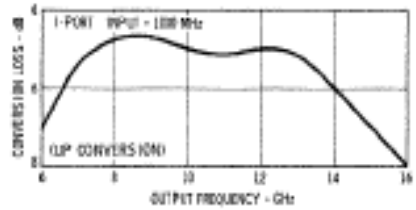

I-Port VSWR vs. f_L

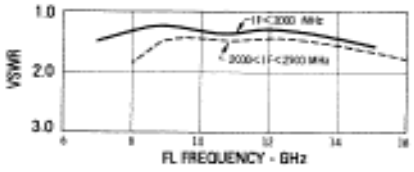

M/A-COM Technology Solutions Inc. (MACOM) and its affiliates reserve the right to make changes to the product(s) or information contained herein without notice.
Visit www.macom.com for additional data sheets and product information.

For further information and support please visit:
https://www.macom.com/support

Double-Balanced Mixer

Rev. V3

Absolute Maximum Ratings

Parameter	Absolute Maximum
Operating Temperature	-54ºC to +100ºC
Storage Temperature	-65ºC to +100ºC
Peak Input Power	+23 dBm max @ +25ºC +20 dBm max @ +100ºC
Peak Input Current	100 mA DC

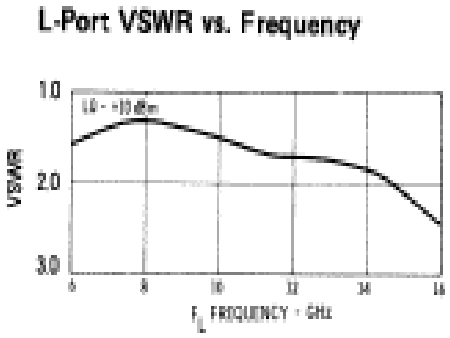

Outline Drawing: Minpac *

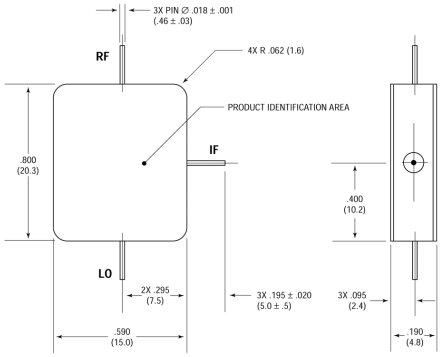

Weight: 6 grams (0.21 oz.) max

Outline Drawing: SMA Connectorized *

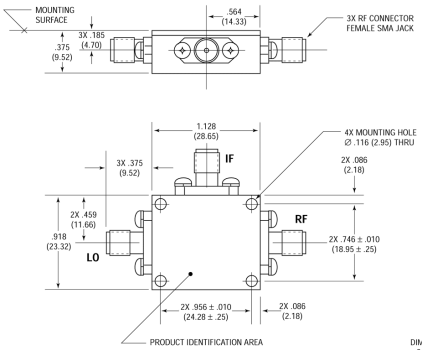

Weight: 25 grams (0.88 oz.) max

* Dimensions are inches (millimeters) ±0.015 (0.38) unless otherwise specified.

M/A-COM Technology Solutions Inc. (MACOM) and its affiliates reserve the right to make changes to the product(s) or information contained herein without notice.
Visit www.macom.com for additional data sheets and product information.

For further information and support please visit:
https://www.macom.com/support

M/A-COM Technology Solutions Inc. All rights reserved.

Information in this document is provided in connection with M/A-COM Technology Solutions Inc ("MACOM") products. These materials are provided by MACOM as a service to its customers and may be used for informational purposes only. Except as provided in MACOM's Terms and Conditions of Sale for such products or in any separate agreement related to this document, MACOM assumes no liability whatsoever. MACOM assumes no responsibility for errors or omissions in these materials. MACOM may make changes to specifications and product descriptions at any time, without notice. MACOM makes no commitment to update the information and shall have no responsibility whatsoever for conflicts or incompatibilities arising from future changes to its specifications and product descriptions. No license, express or implied, by estoppels or otherwise, to any intellectual property rights is granted by this document.

THESE MATERIALS ARE PROVIDED "AS IS" WITHOUT WARRANTY OF ANY KIND, EITHER EXPRESS OR IMPLIED, RELATING TO SALE AND/OR USE OF MACOM PRODUCTS INCLUDING LIABILITY OR WARRANTIES RELATING TO FITNESS FOR A PARTICULAR PURPOSE, CONSEQUENTIAL OR INCIDENTAL DAMAGES, MERCHANTABILITY, OR INFRINGEMENT OF ANY PATENT, COPYRIGHT OR OTHER INTELLECTUAL PROPERTY RIGHT. MACOM FURTHER DOES NOT WARRANT THE ACCURACY OR COMPLETENESS OF THE INFORMATION, TEXT, GRAPHICS OR OTHER ITEMS CONTAINED WITHIN THESE MATERIALS. MACOM SHALL NOT BE LIABLE FOR ANY SPECIAL, INDIRECT, INCIDENTAL, OR CONSEQUENTIAL DAMAGES, INCLUDING WITHOUT LIMITATION, LOST REVENUES OR LOST PROFITS, WHICH MAY RESULT FROM THE USE OF THESE MATERIALS.

MACOM products are not intended for use in medical, lifesaving or life sustaining applications. MACOM customers using or selling MACOM products for use in such applications do so at their own risk and agree to fully indemnify MACOM for any damages resulting from such improper use or sale.