Packaged PIN Diodes

Rev. V14

Features

- High Power
- Fast Speed
- Voltage Ratings to 1500 Volts
- Wide Selection of Carrier Lifetimes
- Wide Selection of Capacitances
- Assortment of Packages Styles
- Available Screened for Military Applications
- RoHS* Compliant

Description and Applications

MACOM's broad line of packaged PIN diodes encompass a comprehensive range of electrical characteristics and package outlines. This diverse union of semiconductor technology and chip packaging gives considerable flexibility to the circuit designer. The fast switching series of packaged PIN diodes utilize a thin I-region, silicon oxide or glass passivated chip which provides for low leakage current and low insertion loss. With the use of in process control monitors to regulate wafer fabrication parameters, these devices will achieve consistent performance in control circuit applications. The high voltage product line of packaged PIN diodes employs MACOM CERMACHIP® passivation process which provides for a hard glass encapsulation that hermetically seals and protects the active area of the chip.

These packaged CERMACHIP® PIN diodes are ideally suited for use in high power applications where high level RF voltages are present. The diode chips are bonded into sealed ceramic packages that are designed for the most stringent electrical and environmental conditions. An extensive choice of package styles are available which may be used in a wide variety of RF microwave circuits. The packaged PIN diodes series are designed to have a high inherent reliability and may be ordered screened to meet many MIL-STD requirements.

Co-Axial Packages

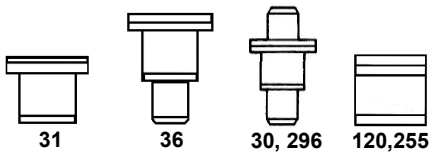

Leaded/Surface Mount Packages

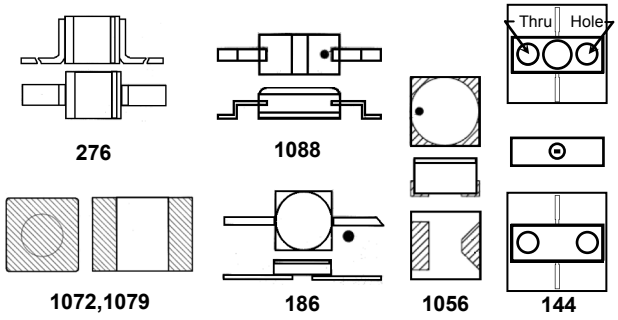

Threaded Packages



Maximum Power Dissipation

Package Style	Absolute Maximum P_{DISS}
Cathode Heatsink	$\frac{T\ (max.\ oper.)\ -25°C}{Thermal\ Resistance}$
Leaded @ +25°C	250 mW
Surface Mount @ +25°C	300 mW

* Restrictions on Hazardous Substances, compliant to current RoHS EU directive.

MACOM Technology Solutions Inc. (MACOM) and its affiliates reserve the right to make changes to the product(s) or information contained herein without notice.
Visit www.macom.com for additional data sheets and product information.

For further information and support please visit:
https://www.macom.com/support

PIN Diodes Specifications (T_{AMB} = +25°C)

100 to 250 V Fast Switching

Part Number	Minimum Reverse Voltage[2]	Maximum Capacitance[1]	Maximum Series Res.	Maximum Thermal Resistance	Nominal Characteristics		
	@ I_R <10 µA	C_T @ -10 V f = 1 MHz	R_S @ 10 mA f = 500 MHz		Carrier Lifetime[5]	T_{RR}[6]	I-Region Width
	V	pF	Ω	°C/W	ns	ns	µm
MA4P202-120	100	0.25	2.50	60	60	5	12
MA4P203-30	100	0.35	1.50	30	100	20	12
MA4P303-36	200	0.35	1.50	30	200	60	20
MA4P404-30	250	0.40[3]	0.70[4]	20	1000	100	30

1. Capacitance values shown are for the case style specified in the part number, other case style will result in different values.
2. The minimum specified V_R (Reverse Voltage) is sourced and the resultant reverse leakage current, Ir, is measured to be <10 µA
3. At V_R = -50 V
4. R_s measured at I_F = +50 mA, f = 100 MHz.
5. Nominal carrier life time specified with diode biased at I_F = +10 mA , I_{REV} = -6 mA
6. Nominal T_{RR} (reverse recovery time) specified with diode biased at I_F = +20 mA , I_{REV} = -200 mA.

Package Options

Consult the "Package Availability Table" on page 7 for more package style choices.

35 to 500 V MELF General Purpose Switching

Part Number[7]	Minimum Reverse Voltage[8]	Maximum Capacitance[1]	Maximum Series Res.	CW Power Dissipation	Nominal Characteristics		
	@ I_R <10 µA	C_T @ -10 V f = 1 MHz	R_S @ 10 mA f = 100 MHz		I_F When R_S = 75 W	Carrier Lifetime[9]	I-Region Width
	V	pF	Ω	W	mA	µs	µm
MA4PH235-1072T	35	1.2	0.50	1.0	—	0.3	10
MADP-000593-10720T	150	1.5	0.55	10.0	—	1.0	20
MA4PH236-1072T	600	0.5	3.0	3.75	—	1.5	58
MA4PH237-1079T	200	1.5	0.6 @ 50 mA	2.0	—	3.0	50
MA4PH238-1072T	200	0.5	6.0	1.0	0.30-0.60	2.0	100
MA4PH239-1079T	200	0.8	25.0	2.0	1.20-2.40	6.0	370
MADP-000234-10720T	500	1.5[10]	0.25 @ 100 mA	5.0	—	3.0	50

7. Only available in case styles indicated.
8. The minimum specified V_R (Reverse Voltage) is sourced and the resultant reverse leakage current, Ir, is measured to be <10 µA.
9. Nominal carrier life time specified with diode biased at I_F = +10 mA , I_{REV} = -6 Ma
10. Ct tested at 100 V

MACOM Technology Solutions Inc. (MACOM) and its affiliates reserve the right to make changes to the product(s) or information contained herein without notice.
Visit www.macom.com for additional data sheets and product information.

For further information and support please visit:
https://www.macom.com/support

PIN Diodes Specifications (T_{AMB} = +25°C)

500 V

Part Number	Minimum Reverse Voltage[11]	Maximum Capacitance[1]	Maximum Series Res.	CW Power Dissipation	Nominal Characteristics	
	@ I_R <10 µA	C_T @ 100 V f = 1 MHz	R_S @ 100 mA f = 100 MHz		Carrier Lifetime[12]	I-Region Width
	V	pF	Ω	W	µs	µm
MA4P504-30	500	0.40	0.60	10	1	40
MADP-000015-000030[13]	500	0.55	0.45	15	2	50
MA4P506-30	500	0.90	0.30	15	3	50

11. The minimum specified VR (Reverse Voltage) is sourced and the resultant reverse leakage current, Ir, is measured to be <10 µA.
12. Nominal carrier life time specified with diode biased at IF = +10 mA , IREV = -6 mA
13. To order this part in a package style other than 30, use the prefix MA4P505 followed by a dash and the desired package style.

Package Options

Consult the "Package Availability Table" on page 7 for more package style choices.

500 V MELF

Part Number	Minimum Reverse Voltage[14]	Maximum Capacitance[1]	Maximum Series Res.	CW Power Dissipation	Nominal Characteristics	
	@ I_R <10 µA	C_T @ 100 V f = 1 MHz	R_S @ 100 mA f = 100 MHz		Carrier Lifetime[15]	I-Region Width
	V	pF	Ω	W	µs	µm
MA4P505-1072T	500	0.65	0.45	15	2	50
MA4P506-1072T	500	1.0	0.30	15	3	50

14. The minimum specified VR (Reverse Voltage) is sourced and the resultant reverse leakage current, Ir, is measured to be <10 µA.
15. Nominal carrier life time specified with diode biased at IF = +10 mA , IREV = -6 mA

MACOM Technology Solutions Inc. (MACOM) and its affiliates reserve the right to make changes to the product(s) or information contained herein without notice.
Visit www.macom.com for additional data sheets and product information.

For further information and support please visit:
https://www.macom.com/support

PIN Diodes Specifications (T_{AMB} = +25°C)

1000 V CERMACHIP

Part Number	Minimum Reverse Voltage[16]	Maximum Capacitance[1]	Maximum Series Res.	CW Power Dissipation	Nominal Characteristics	
	@ I_R <10 µA	C_T @ 100 V f = 1 MHz	R_S @ 100 mA f = 100 MHz		Carrier Lifetime[17]	I-Region Width
	V	pF	Ω	W	µs	µm
MA4P604-30	1000	0.50	1.00	15	3	95
MA4P606-30	1000	0.80	0.70	20	4	95
MA4P607-43	1000	2.00	0.40	25	12	125

16. The maximum specified VR (reverse voltage) is sourced and the resultant reverse leakage current, Ir, is measured to be <10 µA.
17. Nominal carrier life time specified with diode biased at IF = +10 mA , IREV = -6 mA.

Package Options

Consult the "Package Availability Table" on page 7 for more package style choices.

1500 V CERMACHIP

Part Number	Minimum Reverse Voltage[18]	Maximum Capacitance[1]	Maximum Series Res.	Maximum Thermal Resistance	Nominal Characteristics	
	@ I_R <10 µA	C_T @ 100 V f = 1 MHz	R_S @ 200 mA f = 100 MHz		Carrier Lifetime[19]	I-Region Width
	V	pF	Ω	W	µs	µm
MA4P709-150	1500	3.30	0.25	2	10	200

18. The minimum specified VR (reverse voltage) is sourced and the resultant reverse leakage current, Ir, is measured to be <10 µA.
19. Nominal carrier life time specified with diode biased at IF = +10 mA , IREV = -6 mA.

MACOM Technology Solutions Inc. (MACOM) and its affiliates reserve the right to make changes to the product(s) or information contained herein without notice.
Visit www.macom.com for additional data sheets and product information.

For further information and support please visit:
https://www.macom.com/support

Performance Curves @ 100 MHz

Forward Current vs. Series Resistance
MA4P202, MA4P203, MA4P303 and MA4P404

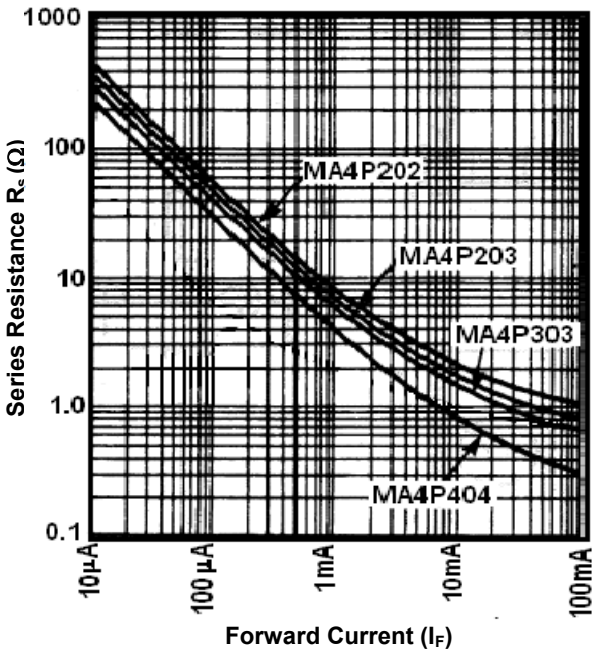

Forward Current vs. Series Resistance
MA4P504, MA4P505 and MA4P506

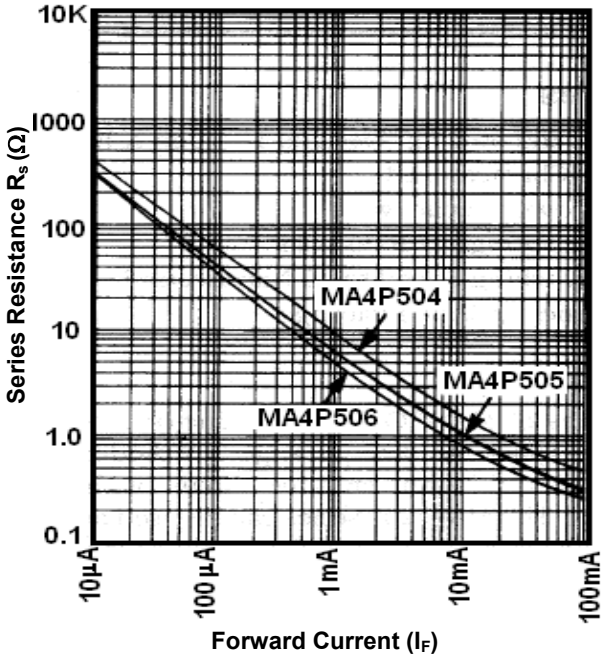

Forward Current vs. Series Resistance
MA4P604, MA4P606 and MA4P607

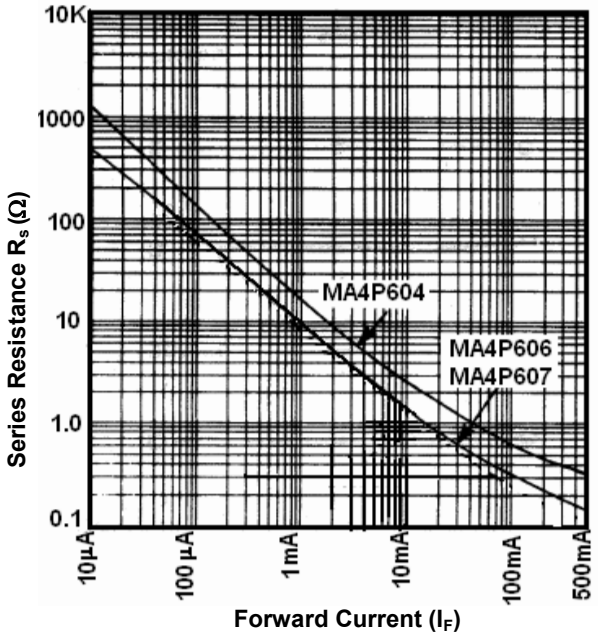

Forward Current vs. Series Resistance
MA4P709

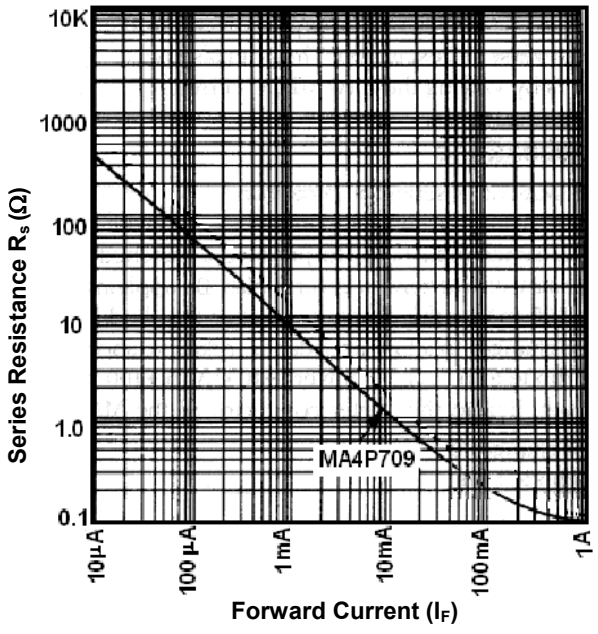

MACOM Technology Solutions Inc. (MACOM) and its affiliates reserve the right to make changes to the product(s) or information contained herein without notice.
Visit www.macom.com for additional data sheets and product information.

For further information and support please visit:
https://www.macom.com/support

Absolute Maximum Ratings[20]

Parameter	Absolution Maximum
Voltage	As Specified in Table
Operating Temperature	-65°C to +175°C
Storage Temperature	-65°C to +200°C
Operating and Storage (Case Style 1088)	-65°C to +125°C

20. Exceeding any one or combination of these limits may cause permanent damage to this device.

Maximum Soldering Temperature[21,22] (Hand soldering operation)

Case Styles	Maximum Temperature
120, 144, 150*,186, 255, 258*, 276, 1088, 1072, 1079	265°C for 5 seconds
30*, 31, 36*, 43*	225°C for 5 seconds

21. Package styles (marked with an *) that are threaded or have pronged ends rely on a pressure connection and do not require solder attachment but can be soldered if desired.
22. Refer to application note M538 on the MACOM website for solder reflow profiles.

Recommended Groups B & C Testing Per MIL-STD 750

Recommended methods and conditions for Groups B, C and equivalent TX and TXV level screening.

Inspection	Method	Condition
Storage Temperature	1031	See Maximum Ratings
Operating Temperature	—	See Maximum Ratings
Temperature Cycling	1051	5 cycles -65°C to +150°C
Shock	2016	500 g's
Vibration	2056	15 g's
Constant Acceleration	2006	20,000 g's
Humidity	1021	10 Days

Recommended Screening Per MIL-STD 750

Recommended methods and conditions for equivalent TX and TXV level screening.

Inspection	Method	Condition
Internal Visual and / or X-Ray	2072, 2076	Notes 23,24
High Temperature Storage	1032	48 hours min. @ max. storage temp.
Thermal Shock	1051	10 Cycles
Constant Acceleration	2006	20,000 g's, Y1
Fine Leak	1071	H
Gross Leak	1071	C or E
Electrical	—	Notes 22,23
Burn-In	1038	Notes 22,23

23. Conditions and details of test depend on specific model number. Information available upon request.
24. Case styles 1056 and 1088 are not military, MIL-STD-750, rated packages.

MACOM Technology Solutions Inc. (MACOM) and its affiliates reserve the right to make changes to the product(s) or information contained herein without notice.
Visit www.macom.com for additional data sheets and product information.

For further information and support please visit:
https://www.macom.com/support

Ordering Information

The Packaged PIN Diode specifications shown in the tables on pages 2, 3, & 4 are for the standard style package. The standard package style is indicated by the number following the dash after the base part number. Note that the specification tables list the total diode capacitance for the standard case style. The total capacitance for the base part in an alternative package will differ and is computed by adding the junction capacitance of the chip and the parasitic capacitance of the alternative package as defined in the Package Parasitic Capacitance table.

To compute the chip junction capacitance, subtract the total capacitance shown in the specifications tables on pages 2, 3, & 4 from the appropriate standard style package capacitance below The various base part numbers are only available in the case styles shown in the Package Availability Table below. To order, indicate the base part number followed by a dash and the desired package style.

For example: The MA4P506-258 is the MA4P506 chip in the 258 style package.

Other package styles not listed may be available by request at: macom.com

Package Availability Table[25]

Base Part Number	Available ODS Package Styles
MA4P202	120, 276
MA4P203	30, 1056
MA4P303	120, 186, 1088
MA4P404	30, 258,
MA4P504	30, 120, 144, 186, 255, 1072T[25,26]
MA4P505	36, 255, 1072T[25]
MA4P506	30, 31, 255, 258, 1072T[25]
MA4P604	30, 255, 258
MA4P606	30, 36, 258
MA4P607	43, 296
MA4P709	150
MADP-000015-000030	30
MA4PH235	1072T[25]
MA4PH236	1072T[25]
MA4PH237	1079T[25]
MA4PH238	1072T[25]
MA4PH239	1079T[25]
MADP-000234	10720T[25]

25. "T" after the package style number indicates tape and reel, refer to M513 for tape and reel information.
26. Datasheet for MA4P504-1072 can be found at: macom.com

Package Parasitic Capacitance

Package Style	Cap. (pF)
30	0.18
31	0.18
36	0.18
43	0.75
120	0.13
144	0.42
186	0.15
255	0.30
258	0.18
276	0.13
296	0.35
1056	0.20
1072	0.16
1079	0.13
1088	0.12

MACOM Technology Solutions Inc. (MACOM) and its affiliates reserve the right to make changes to the product(s) or information contained herein without notice.
Visit www.macom.com for additional data sheets and product information.

For further information and support please visit:
https://www.macom.com/support

MACOM Technology Solutions Inc. All rights reserved.

Information in this document is provided in connection with MACOM Technology Solutions Inc ("MACOM") products. These materials are provided by MACOM as a service to its customers and may be used for informational purposes only. Except as provided in MACOM's Terms and Conditions of Sale for such products or in any separate agreement related to this document, MACOM assumes no liability whatsoever. MACOM assumes no responsibility for errors or omissions in these materials. MACOM may make changes to specifications and product descriptions at any time, without notice. MACOM makes no commitment to update the information and shall have no responsibility whatsoever for conflicts or incompatibilities arising from future changes to its specifications and product descriptions. No license, express or implied, by estoppels or otherwise, to any intellectual property rights is granted by this document.

THESE MATERIALS ARE PROVIDED "AS IS" WITHOUT WARRANTY OF ANY KIND, EITHER EXPRESS OR IMPLIED, RELATING TO SALE AND/OR USE OF MACOM PRODUCTS INCLUDING LIABILITY OR WARRANTIES RELATING TO FITNESS FOR A PARTICULAR PURPOSE, CONSEQUENTIAL OR INCIDENTAL DAMAGES, MERCHANTABILITY, OR INFRINGEMENT OF ANY PATENT, COPYRIGHT OR OTHER INTELLECTUAL PROPERTY RIGHT. MACOM FURTHER DOES NOT WARRANT THE ACCURACY OR COMPLETENESS OF THE INFORMATION, TEXT, GRAPHICS OR OTHER ITEMS CONTAINED WITHIN THESE MATERIALS. MACOM SHALL NOT BE LIABLE FOR ANY SPECIAL, INDIRECT, INCIDENTAL, OR CONSEQUENTIAL DAMAGES, INCLUDING WITHOUT LIMITATION, LOST REVENUES OR LOST PROFITS, WHICH MAY RESULT FROM THE USE OF THESE MATERIALS.

MACOM products are not intended for use in medical, lifesaving or life sustaining applications. MACOM customers using or selling MACOM products for use in such applications do so at their own risk and agree to fully indemnify MACOM for any damages resulting from such improper use or sale.