2000 V & 3000 V PIN Diodes
MA4PK200x & MA4PK300x

KILOVOLT™ Series
Rev. V14

Features

- Reverse Voltage up to 3000 Volts
- 25 Ampere Current Rating
- Designed for HF, Multi-Throw Kilowatt Switches
- Low Loss, Low Distortion
- Rugged, Hermetically Sealed Packaging
- Convenient Solder Lug Attachment
- Non Magnetic to 3 Tesla for MRI Applications
- RoHS Compliant

Applications

- Filter Switches
- Antenna Couplers
- Power Amplifier By-pass Switches
- MRI Switches

Description

The KILOVOLT™ PIN diode series utilize modern semiconductor and packaging technology that assures low loss, low distortion, and reliable performance in multi-kilowatt switch applications at frequencies as low as 1 MHz. The PIN chips employed have low resistance, high power dissipation and very high stand-off voltage capability. KILOVOLT™ PIN diodes employ ultra high resistively, long carrier lifetime, float zone material onto which P+ and N+ regions are deposited using an epitaxial process designed MA-COM for high voltage PIN diodes. This process results in better preservation of the carrier lifetime and superior layer to layer interface when compared to a conventional double diffused process. The processing of the I-region width is tightly controlled using modern lapping techniques. KILOVOLT™ PIN diode chips utilize MACOMs' proprietary Cermachip™ glass passivation. The hard glass covers all exposed junction and intrinsic surfaces. This results in a hermetically sealed, passivated chip that has been used in many high reliability military and commercial programs.

The KILOVOLT™ PIN diode series is designed for use as high power switching elements in multi-kilowatt HF and VHF applications. These PIN diodes have been extensively characterized for their electrical and thermal properties to assure predictable, low loss, high power handling and low distortion performance.

Package Outlines

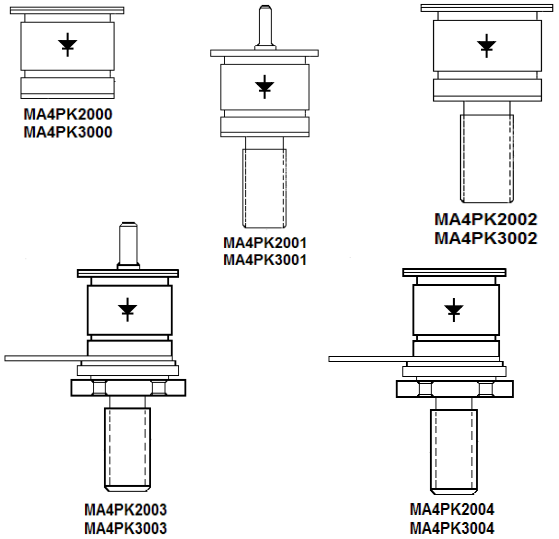

Packaging

The metal-ceramic packages were developed specifically for the KILOVOLT™ PIN diode series. The packages are designed to withstand extremely high voltages and currents. The packages meet the environmental requirements of MIL-STD-202 and MIL-STD750. The PIN diode chip is bonded to the package and the anode strap is bonded to the chip at temperatures exceeding 300°C. The anode strap has a unique, large cross-sectional area allowing for high current carrying capability. The packages are sealed using a projection welding technique in an inert environment. KILOVOLT™ PIN diodes are available with a solder lug on the anode electrode to allow for a convenient and reliable wrap-around wire connection.

Diode Part Numbers & Package Style

2000 V	3000 V	Package Style
MA4PK2000	MA4PK3000	Pill
MA4PK2001	MA4PK3001	Threaded Stud & Solder Lug
MA4PK2002	MA4PK3002	Threaded Stud Only
MA4PK2003	MA4PK3003	Insulated Threaded Stud & Solder Lug
MA4PK2004	MA4PK3004	Insulated Threaded Stud Only

MACOM Technology Solutions Inc. (MACOM) and its affiliates reserve the right to make changes to the product(s) or information contained herein without notice.
Visit www.macom.com for additional data sheets and product information.

For further information and support please visit:
https://www.macom.com/support

Electrical Specifications @ T_A = 25°C

Parameter	Test Conditions	MA4PK2000 Series	MA4PK3000 Series
Reverse Voltage (Max.) V_R	10 µA	2000 Volts	3000 Volts
Series Resistance (Max) R_S	F = 4 MHz, I = 0.5 A	0.20 Ω	0.25 Ω
Series Resistance (Typ.) R_S	F = 1.0 -100 MHz, I = 0.5 A	0.10 Ω	0.15 Ω
Total Capacitance (Max) C_T	F = 1 MHz, V = 100 V	3.2 pF	4.0 pF
Parallel Resistance (Typ.) R_P	F =100 MHz, V = 0 V	5 KΩ	10 KΩ
Carrier Lifetime (Min.) T_L	I_F = 10 mA	30 µs	65 µs
Forward Voltage (Max.) V_F	I_F = 1 A	1.2 V	1.2 V
Thermal Resistance (Max.) Ø	—	3°C/W (Stud) 4°C/W (Ins Stud)	2°C/W (Stud) 3°C/W (Ins Stud)
I-Region Width (Nom.)	—	200 µm	325 µm

Absolute Maximum Ratings

Parameter	Absolute Maximum
Operating & Storage Temperature	-65°C to +175°C
Installation Temperature	250°C/30 Seconds
Instantaneous Reverse Voltage	Voltage Rating
Forward Current (RF & DC)	25 A

Maximum Power Dissipation @ T_C = 25°C

Part #	Absolute Maximum
MA4PK2001 MA4PK2002	50.0 W
MA4PK2003 MA4PK2004	37.5 W
MA4PK3001 MA4PK3002	75.0 W
MA4PK3003 MA4PK3004	50.0 W

Handling Procedures

Please observe the following precautions to avoid damage:

Static Sensitivity

These electronic devices are sensitive to electrostatic discharge (ESD) and can be damaged by static electricity. Proper ESD control techniques should be used when handling these Class 1C, HBM devices.

MACOM Technology Solutions Inc. (MACOM) and its affiliates reserve the right to make changes to the product(s) or information contained herein without notice.
Visit www.macom.com for additional data sheets and product information.

For further information and support please visit:
https://www.macom.com/support

Typical Performance Curves @ +25°C

Series Resistance vs. Current @ 100 MHz (MA4PK2000 & MA4PK3000 Series)

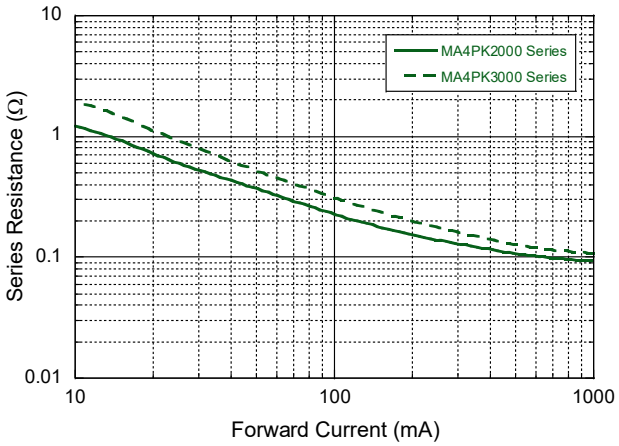

Forward Voltage vs. Forward Current (MA4PK2000 & MA4PK3000 Series)

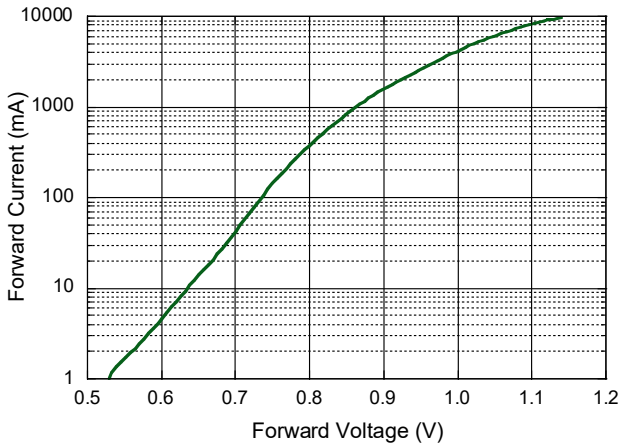

Capacitance vs. Frequency & Reverse Voltage (MA4PK2000 Series)

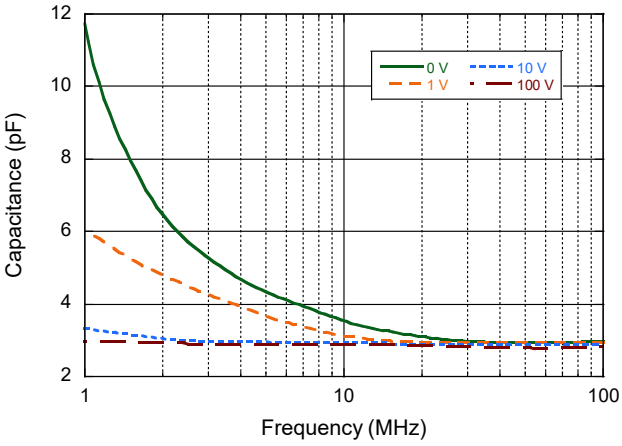

Capacitance vs. Frequency & Reverse Voltage (MA4PK3000 Series)

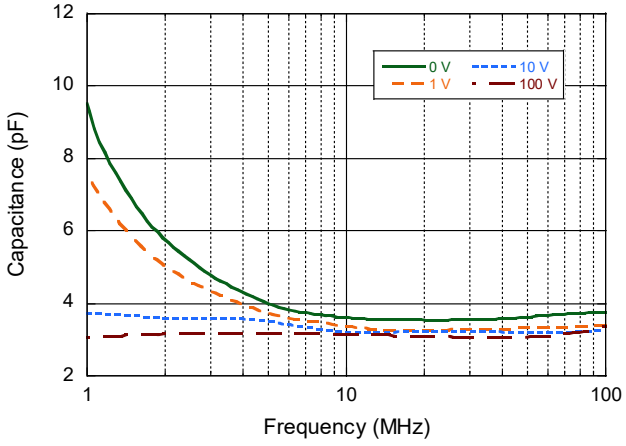

MACOM Technology Solutions Inc. (MACOM) and its affiliates reserve the right to make changes to the product(s) or information contained herein without notice.
Visit www.macom.com for additional data sheets and product information.

For further information and support please visit:
https://www.macom.com/support

Typical Performance Curves @ +25°C

Conductance vs. Frequency & Reverse Voltage (MA4PK2000 Series)

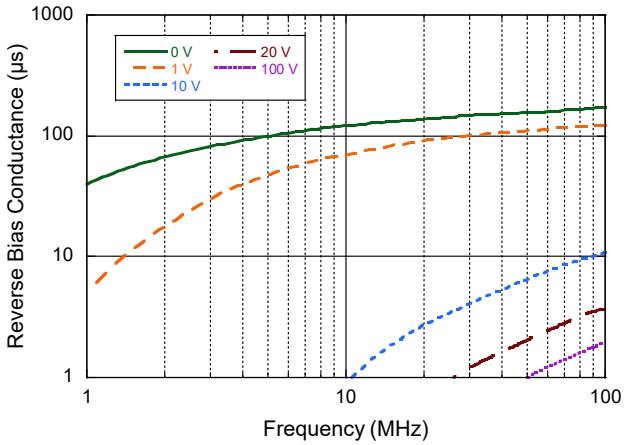

Conductance vs. Frequency & Reverse Voltage (MA4PK3000 Series)

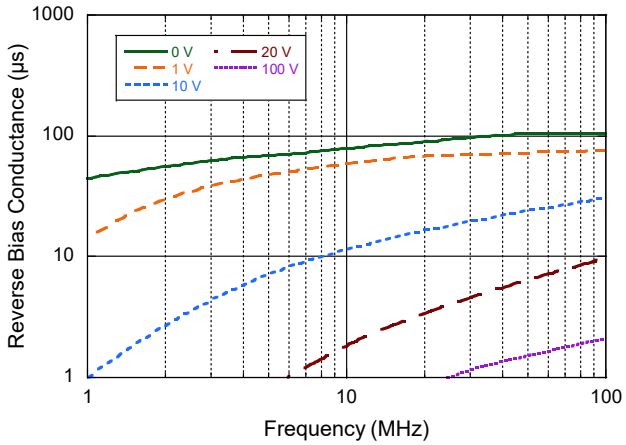

Carrier Lifetime vs. Forward Current

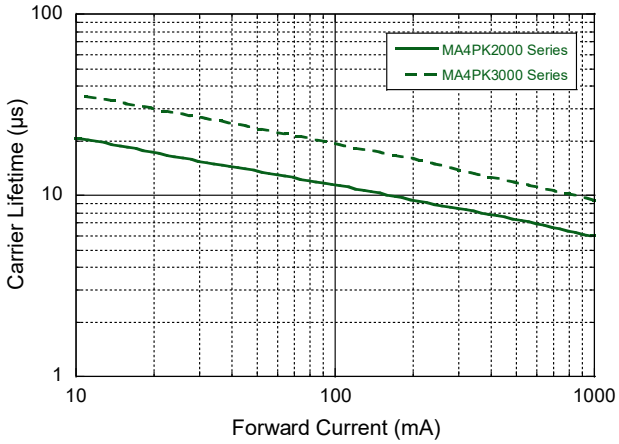

Pulsed Thermal Resistance °C/W

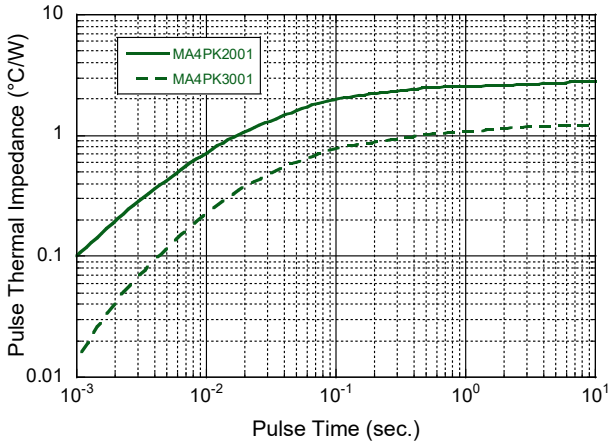

MACOM Technology Solutions Inc. (MACOM) and its affiliates reserve the right to make changes to the product(s) or information contained herein without notice.
Visit www.macom.com for additional data sheets and product information.

For further information and support please visit:
https://www.macom.com/support

Case Styles (Black Dot Denotes Cathode)

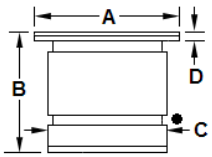

DIM.	MA4PK2000 Case Style 1027				MA4PK3000 Case Style 1073			
	Inches		Millimeters		Inches		Millimeters	
	Min.	Max.	Min.	Max.	Min.	Max.	Min.	Max.
A	0.304	0.316	7.72	8.02	0.468	0.485	11.90	12.30
B	0.254	0.270	6.45	6.86	0.387	0.411	9.83	10.40
C	0.245	0.255	6.22	6.48	0.390	0.400	9.90	10.10
D	0.023	0.031	0.58	0.79	0.028	0.042	0.71	1.06
	C_P = 0.45 pF		L_S = 2 nH		C_P = 0.75 pF		L_S = 3 nH	

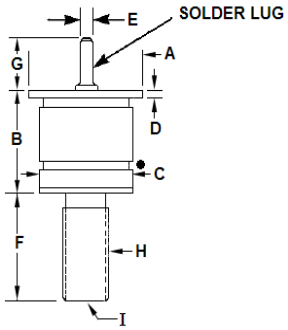

DIM.	MA4PK2001 Case Style 1082				MA4PK3001 Case Style 1084			
	Inches		Millimeters		Inches		Millimeters	
	Min.	Max.	Min.	Max.	Min.	Max.	Min.	Max.
A	0.304	0.316	7.72	8.02	0.468	0.485	11.90	12.30
B	0.254	0.270	6.45	6.86	0.387	0.411	9.83	10.40
C	0.245	0.255	6.22	6.48	0.390	0.400	9.90	10.10
D	0.023	0.031	0.58	0.79	0.028	0.042	0.71	1.06
E	0.060	0.065	1.52	1.65	0.060	0.065	1.52	1.65
F	0.281	0.305	7.14	7.75	0.425	0.445	10.80	11.30
G	0.190	0.205	4.83	5.21	0.190	0.205	4.83	5.21
H	6-40 UNF-3A				10-32 UNF-2A			
I	0.072 SPLINE X 0.070 DP				0.50 SLOT X 0.060 DP			
	C_P = 0.45 pF		L_S = 2 nH		C_P = 0.75 pF		L_S = 3 nH	

MACOM Technology Solutions Inc. (MACOM) and its affiliates reserve the right to make changes to the product(s) or information contained herein without notice.
Visit www.macom.com for additional data sheets and product information.

For further information and support please visit:
https://www.macom.com/support

Case Styles (Black Dot Denotes Cathode)

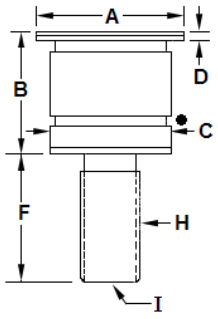

DIM.	MA4PK2002 Case Style 1048				MA4PK3002 Case Style 1074			
	Inches		Millimeters		Inches		Millimeters	
	Min.	Max.	Min.	Max.	Min.	Max.	Min.	Max.
A	0.304	0.316	7.72	8.02	0.468	0.485	11.90	12.30
B	0.254	0.270	6.45	6.86	0.387	0.411	9.83	10.40
C	0.245	0.255	6.22	6.48	0.390	0.400	9.90	10.10
D	0.023	0.031	0.58	0.79	0.028	0.042	0.71	1.06
E	0.060	0.065	1.52	1.65	0.060	0.065	1.52	1.65
F	0.281	0.305	7.14	7.75	0.425	0.445	10.80	11.30
H	6-40 UNF-3A				10-32 UNF-2A			
I	0.072 SPLINE X 0.070 DP				0.50 SLOT X 0.060 DP			
	C_P = 0.45 pF		L_S = 2 nH		C_P = 0.75 pF		L_S = 3 nH	

MACOM Technology Solutions Inc. (MACOM) and its affiliates reserve the right to make changes to the product(s) or information contained herein without notice.
Visit www.macom.com for additional data sheets and product information.

For further information and support please visit:
https://www.macom.com/support

Case Styles (Black Dot Denotes Cathode)

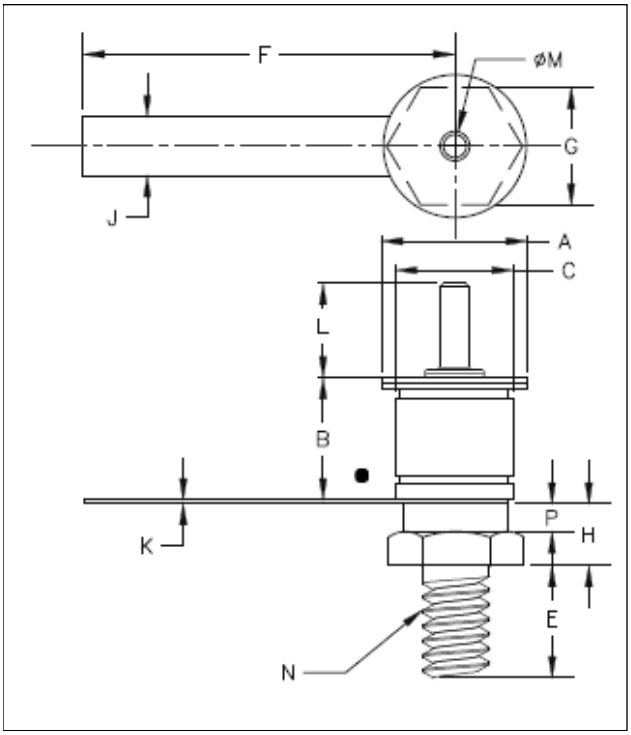

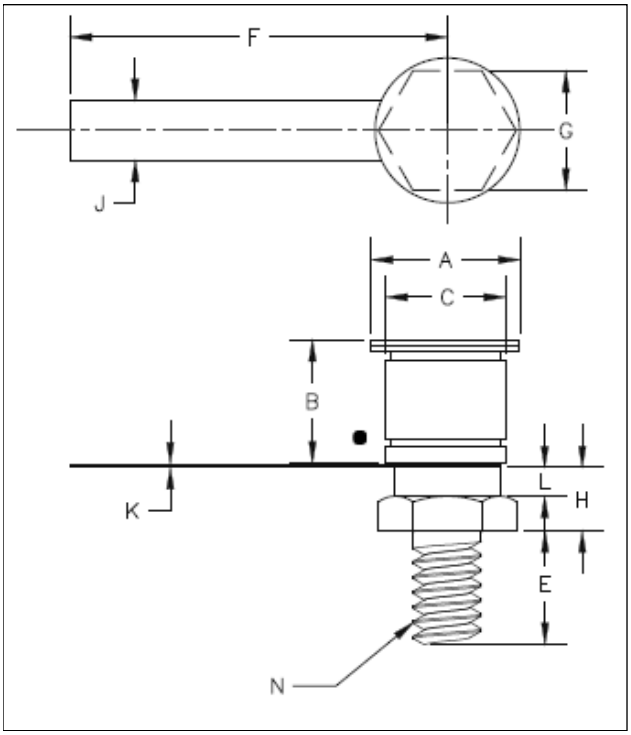

MA4PK2003 Case Style 1080				
Dim.	Inches		Millimeters	
	Min.	Max.	Min.	Max.
A	0.304	0.316	7.72	8.02
B	0.254	0.270	6.45	6.86
C	0.245	0.255	6.22	6.48
D	0.023	0.031	0.58	0.79
E	0.221	0.252	5.61	6.40
F	0.780	0.790	19.8	20.1
G	0.245	0.255	6.22	6.48
H	0.128	0.137	3.25	3.48
J	0.120	0.130	3.05	3.30
K	0.007	0.009	0.18	0.23
L	0.190	0.205	4.83	5.21
M	0.060	0.065	1.52	1.65
P	0.058	0.062	1.47	1.58
N	6-32 UNF-3A			
C_{GND} = 1.1 pF	C_P = 0.45 pF		L_S = 2 nH	

MA4PK2004 Case Style 1038				
Dim.	Inches		Millimeters	
	Min.	Max.	Min.	Max.
A	0.304	0.316	7.72	8.02
B	0.254	0.270	6.45	6.86
C	0.245	0.255	6.22	6.48
D	0.023	0.031	0.58	0.79
E	0.221	0.252	5.61	6.40
F	0.780	0.790	19.8	20.1
G	0.245	0.255	6.22	6.48
H	0.128	0.137	3.25	3.48
J	0.120	0.130	3.05	3.30
K	0.007	0.009	0.18	0.23
L	0.058	0.062	1.47	1.58
N	6-32 UNF-3A			
C_{GND} = 1.1 pF	C_P = 0.45 pF		L_S = 2 nH	

MACOM Technology Solutions Inc. (MACOM) and its affiliates reserve the right to make changes to the product(s) or information contained herein without notice.
Visit www.macom.com for additional data sheets and product information.

For further information and support please visit:
https://www.macom.com/support

Case Styles (Black Dot Denotes Cathode)

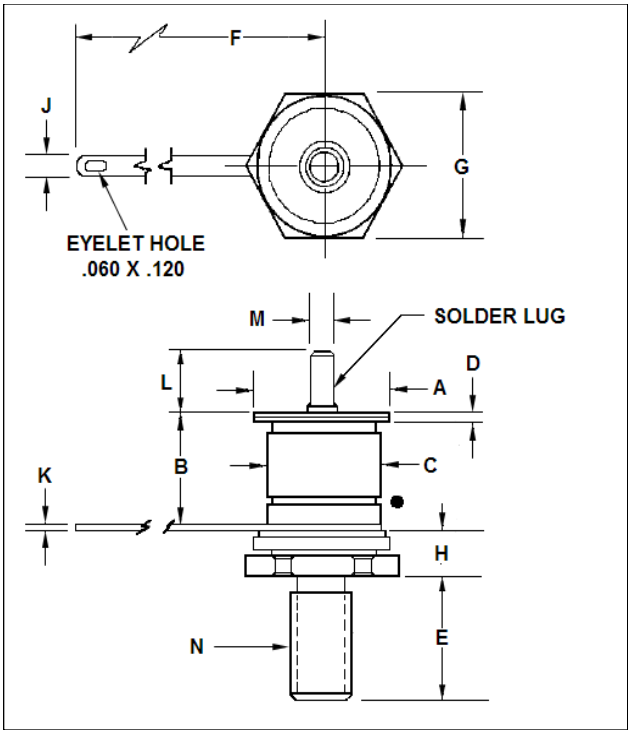

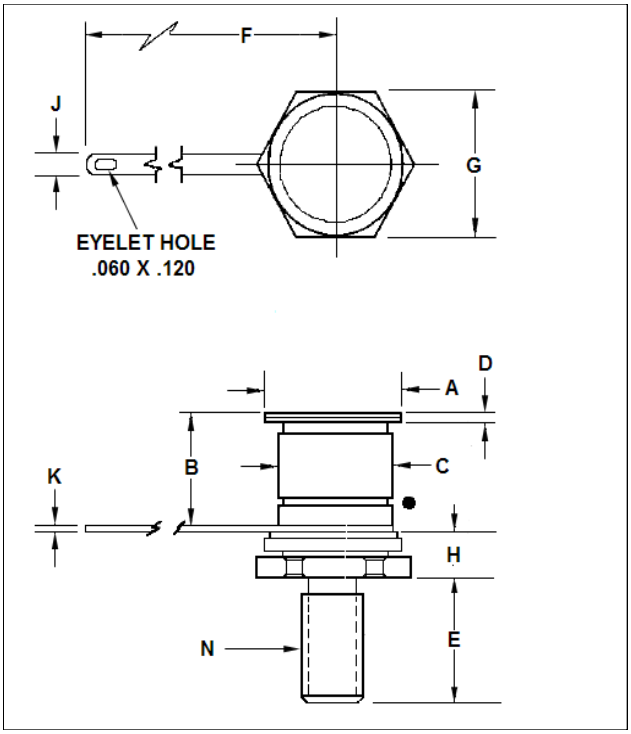

MA4PK3003 Case Style 1085				
Dim.	Inches		Millimeters	
	Min.	Max.	Min.	Max.
A	0.468	0.485	11.9	12.3
B	0.385	0.410	9.8	10.4
C	0.390	0.400	9.90	10.1
D	0.030	0.045	0.76	1.14
E	0.422	0.452	10.72	11.48
F	0.805	0.820	20.45	20.83
G	0.490	0.500	12.45	12.70
H	0.155	0.175	3.94	4.45
J	0.120	0.130	3.05	3.30
K	0.022	0.026	0.559	0.660
L	0.190	0.205	4.83	5.21
M	0.060	0.065	1.52	1.65
N	10-32 UNF-2A			
C_{GND} = 1.1 pF	C_P = 0.475 pF		L_S = 3 nH	

MA4PK3004 Case Style 1075				
Dim.	Inches		Millimeters	
	Min.	Max.	Min.	Max.
A	0.468	0.485	11.9	12.3
B	0.385	0.410	9.8	10.4
C	0.390	0.400	9.90	10.1
D	0.030	0.045	0.76	1.14
E	0.422	0.452	10.72	11.48
F	0.805	0.820	20.45	20.83
G	0.490	0.500	12.45	12.70
H	0.155	0.175	3.94	4.45
J	0.120	0.130	3.05	3.30
K	0.022	0.026	0.559	0.660
N	10-32 UNF-2A			
C_{GND} = 1.1 pF	C_P = 0.75 pF		L_S = 3 nH	

MACOM Technology Solutions Inc. (MACOM) and its affiliates reserve the right to make changes to the product(s) or information contained herein without notice.
Visit www.macom.com for additional data sheets and product information.

For further information and support please visit:
https://www.macom.com/support

MACOM Technology Solutions Inc. (“MACOM”). All rights reserved.
These materials are provided in connection with MACOM’s products as a service to its customers and may be used for informational purposes only. Except as provided in its Terms and Conditions of Sale or any separate agreement, MACOM assumes no liability or responsibility whatsoever, including for (i) errors or omissions in these materials; (ii) failure to update these materials; or (iii) conflicts or incompatibilities arising from future changes to specifications and product descriptions, which MACOM may make at any time, without notice. These materials grant no license, express or implied, to any intellectual property rights.

THESE MATERIALS ARE PROVIDED "AS IS" WITH NO WARRANTY OR LIABILITY, EXPRESS OR IMPLIED, RELATING TO SALE AND/OR USE OF MACOM PRODUCTS INCLUDING FITNESS FOR A PARTICULAR PURPOSE, MERCHANTABILITY, INFRINGEMENT OF INTELLECTUAL PROPERTY RIGHT, ACCURACY OR COMPLETENESS, OR SPECIAL, INDIRECT, INCIDENTAL, OR CONSEQUENTIAL DAMAGES WHICH MAY RESULT FROM USE OF THESE MATERIALS.

MACOM products are not intended for use in medical, lifesaving or life sustaining applications. MACOM customers using or selling MACOM products for use in such applications do so at their own risk and agree to fully indemnify MACOM for any damages resulting from such improper use or sale.