MAAM02350

Wide Band GaAs MMIC Amplifier
0.2 - 3.0 GHz

Rev. V4

Features

- High Gain: 19 dB Typical
- Output Power: +14 dBm Typical
- Noise Figure: 3.7 dB Typical
- RoHS* Compliant

Description

M/A-COM's MAAM02350 is a wide band, MMIC amplifier. It includes two integrated gain stages and employs resistive feedback to obtain flat gain and a good, 50 ohm input, and output impedance match over a very wide bandwidth. The MAAM02350 operates from a single +6 V supply. It is fully monolithic.

The MAAM02350 functions well as a generic IF, driver or buffer amplifier where high gain, low noise figure, excellent linearity and low power consumption are important. Because of its wide bandwidth, the MAAM02350 can be used in numerous commercial and government system applications, such as wireless communications, EW and radar.

The MAAM02350 is manufactured in-house using a reliable, 0.5-micron, GaAs MESFET process. This product is 100% RF tested to ensure compliance to performance specifications.

Absolute Maximum Ratings [1,2]

Parameter	Absolute Maximum
V_{DD}	+7 V
Input Power	+20 dBm
Channel Temperature [3]	+150°C
Operating Temperature	-55°C to +100°C
Storage Temperature	-65°C to +150°C

1. Exceeding any one or combination of these limits may cause permanent damage to this device.
2. M/A-COM does not recommend sustained operation near these survivability limits.
3. Typical thermal resistance (θjc) = +80°C/W.

Pad Layout

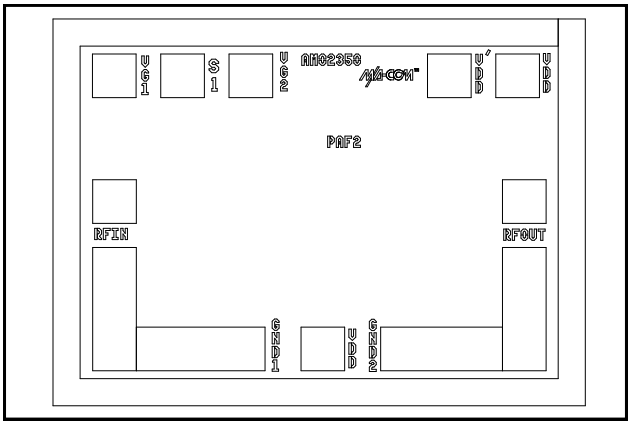

Die Size—Inches (mm)

0.044 x 0.032 x 0.004 (1.140 x 0.820 x 0.102)

Outline Drawing

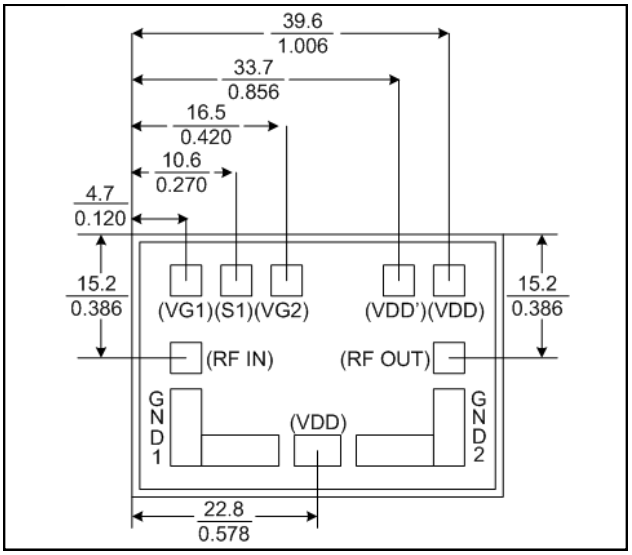

Ordering Information [4,5]

Part Number	Package
MAAM02350	DIE

4. Reference Application Note M538 for lead-free solder reflow recommendations.
5. Die quantity varies.

* Restrictions on Hazardous Substances, European Union Directive 2002/95/EC.

M/A-COM Technology Solutions Inc. (MACOM) and its affiliates reserve the right to make changes to the product(s) or information contained herein without notice.
Visit www.macom.com for additional data sheets and product information.

For further information and support please visit:
https://www.macom.com/support

Wide Band GaAs MMIC Amplifier
0.2 - 3.0 GHz

Electrical Specifications: T_A = 25°C, V_{DD} = +6 V, Z_0 = 50 Ω

Parameter	Test Conditions	Units	Min.	Typ.	Max.
Gain	0.2 - 3.0 GHz, P_{IN} = -30 dBm	dB	17	19	—
Gain Flatness	0.2 - 3.0 GHz, P_{IN} = -30 dBm	dB	—	± 0.5	—
Noise Figure	0.2 - 3.0 GHz	dB	—	3.7	4.1
Input VSWR	0.2 - 3.0 GHz, P_{IN} = -30 dBm	Ratio	—	1.8:1	—
Output VSWR	0.2 - 3.0 GHz, P_{IN} = -30 dBm	Ratio	—	1.5:1	—
Output 1 dB Compression	0.2 - 3.0 GHz	dBm	—	+14	—
OIP3	0.2 - 3.0 GHz, P_{IN} = -30 dBm	dBm	—	24	—
Reverse Isolation	0.2 - 3.0 GHz, P_{IN} = -30 dBm	dB	—	35	—
Bias Current	—	mA	—	65	100

Schematic

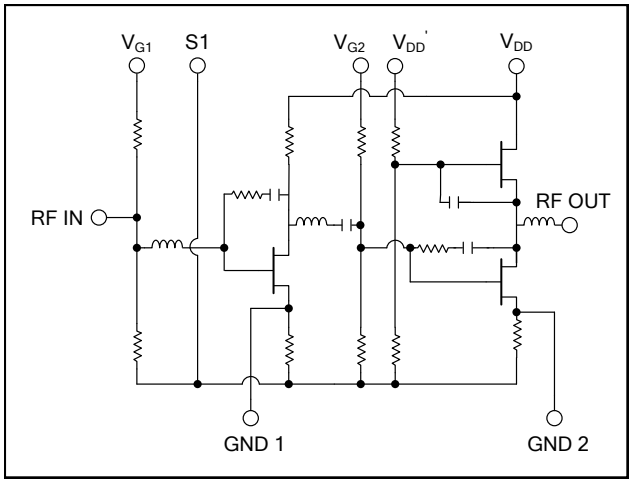

Typical Bias Configuration

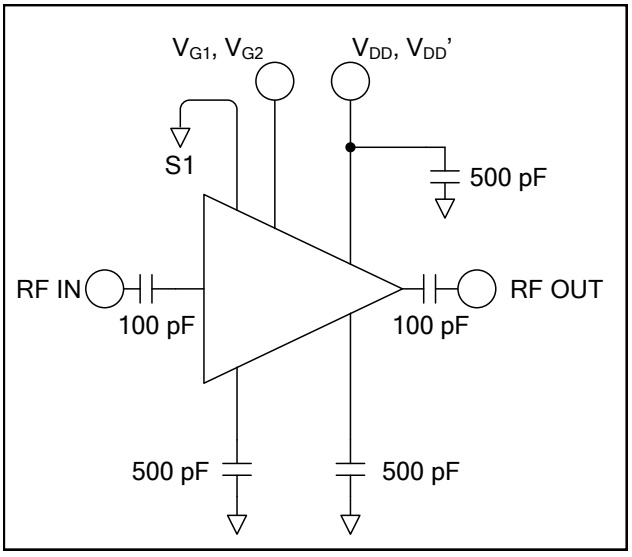

6. Self-bias operation is obtained by connecting +6 volts to both V_{DD} and V_{DD}' pads, grounding pad S1, and connecting pads GND1 and GND2 to separate bypass 500 pF MOS capacitors.

Handling Procedures

Please observe the following precautions to avoid damage:

Static Sensitivity

Gallium Arsenide Integrated Circuits are sensitive to electrostatic discharge (ESD) and can be damaged by static electricity. Proper ESD control techniques should be used when handling these devices.

M/A-COM Technology Solutions Inc. (MACOM) and its affiliates reserve the right to make changes to the product(s) or information contained herein without notice.
Visit www.macom.com for additional data sheets and product information.

For further information and support please visit:
https://www.macom.com/support

Typical Performance @ +25°C

Gain

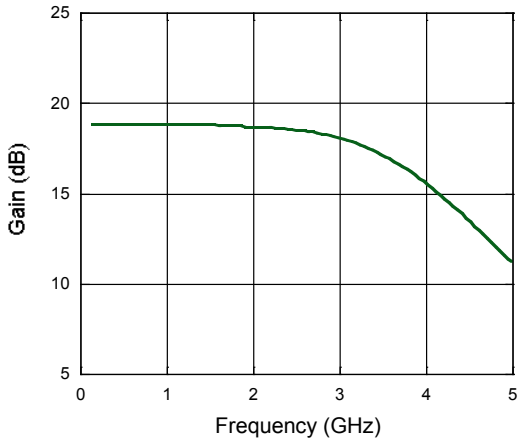

VSWR

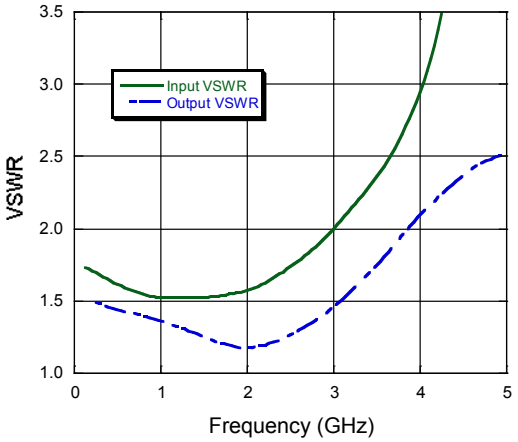

Noise Figure

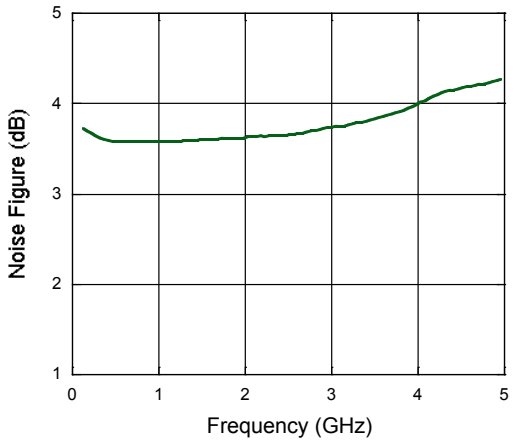

M/A-COM Technology Solutions Inc. (MACOM) and its affiliates reserve the right to make changes to the product(s) or information contained herein without notice.
Visit www.macom.com for additional data sheets and product information.

For further information and support please visit:
https://www.macom.com/support

Handling

Permanent damage to the MAAM02350 may occur if the following precautions are not adhered to:

A. Cleanliness - The MAAM02350 should be handled in a clean environment. Do not attempt to clean assembly after the MAAM02350 is installed.
B. Static Sensitivity - All die handling equipment and personnel should comply with DOD-STD-1686 Class 1.
C. Transients - Avoid instrument and power supply transients while bias is connected to the MAAM02350. Use shielded signal and bias cables to minimize inductive pick-up.
D. General Handling - DO NOT touch the surface of the die. It is recommended that the MAAM02350 die be handled along the long side with a sharp pair of tweezers.

Mounting

The MAAM02350 is back-metallized with Pd/Ni/Au (100/1,000/30,000Å) metallization. It can be die-mounted using Au/Sn eutectic performs or a thermally and electrically conductive epoxy. The attachment surface should be clean and flat.

Eutectic Die Attach:

A. An 80/20 Au/Sn perform is recommended with a work surface temperature of approximately 225°C and a tool temperature of 265°C. When hot 95/5 nitrogen/hydrogen gas is applied, solder temperature should be approximately 290°C.
B. DO NOT expose the MAAM02350 to a temperature greater than 320°C for more than 20 seconds. No more than 3 seconds of scrubbing should be required for attachment.

Epoxy Die Attach:

A. Apply a minimum amount of epoxy and place the MAAM02350 into position. A thin epoxy fillet should be visible around the perimeter of the die.
B. Cure epoxy per manufacturer's recommended schedule.

Bonding

A. Ball or wedge bond with 1.0 mil diameter gold wire or 3.0 mil x 0.5 mil ribbon. Thermosonic bonding with a nominal stage temperature of 150°C and a ball bonding force of 40 to 50 grams or wedge bonding force of 18 to 22 grams is recommended. Ultrasonic energy and time should be adjusted to the minimum levels necessary to achieve reliable bonds.
B. Bonds should be started on the die and terminated on the package. RF bonds should be as short as possible; at least three and no more than four bond wires from ground pads to package are recommended.
C. Bonding pads are 4.0 x 4.0 mils.

M/A-COM Technology Solutions Inc. (MACOM) and its affiliates reserve the right to make changes to the product(s) or information contained herein without notice.
Visit www.macom.com for additional data sheets and product information.

For further information and support please visit:
https://www.macom.com/support

M/A-COM Technology Solutions Inc. All rights reserved.
Information in this document is provided in connection with M/A-COM Technology Solutions Inc ("MACOM") products. These materials are provided by MACOM as a service to its customers and may be used for informational purposes only. Except as provided in MACOM's Terms and Conditions of Sale for such products or in any separate agreement related to this document, MACOM assumes no liability whatsoever. MACOM assumes no responsibility for errors or omissions in these materials. MACOM may make changes to specifications and product descriptions at any time, without notice. MACOM makes no commitment to update the information and shall have no responsibility whatsoever for conflicts or incompatibilities arising from future changes to its specifications and product descriptions. No license, express or implied, by estoppels or otherwise, to any intellectual property rights is granted by this document.

THESE MATERIALS ARE PROVIDED "AS IS" WITHOUT WARRANTY OF ANY KIND, EITHER EXPRESS OR IMPLIED, RELATING TO SALE AND/OR USE OF MACOM PRODUCTS INCLUDING LIABILITY OR WARRANTIES RELATING TO FITNESS FOR A PARTICULAR PURPOSE, CONSEQUENTIAL OR INCIDENTAL DAMAGES, MERCHANTABILITY, OR INFRINGEMENT OF ANY PATENT, COPYRIGHT OR OTHER INTELLECTUAL PROPERTY RIGHT. MACOM FURTHER DOES NOT WARRANT THE ACCURACY OR COMPLETENESS OF THE INFORMATION, TEXT, GRAPHICS OR OTHER ITEMS CONTAINED WITHIN THESE MATERIALS. MACOM SHALL NOT BE LIABLE FOR ANY SPECIAL, INDIRECT, INCIDENTAL, OR CONSEQUENTIAL DAMAGES, INCLUDING WITHOUT LIMITATION, LOST REVENUES OR LOST PROFITS, WHICH MAY RESULT FROM THE USE OF THESE MATERIALS.

MACOM products are not intended for use in medical, lifesaving or life sustaining applications. MACOM customers using or selling MACOM products for use in such applications do so at their own risk and agree to fully indemnify MACOM for any damages resulting from such improper use or sale.

M/A-COM Technology Solutions Inc. (MACOM) and its affiliates reserve the right to make changes to the product(s) or information contained herein without notice.
Visit www.macom.com for additional data sheets and product information.

For further information and support please visit:
https://www.macom.com/support