MADRCC0002

Dual Linear Driver for Vector Modulators

Rev. V7

Features

- Linearizes M/A-COM's PIN Diode Vector Modulators Over a 360° Phase Range
- Dual Channels Allow One Driver per Vector Modulator
- Guaranteed Minimum Output Currents of 20 mA
- Operates with a Single Supply Voltage of +5V
- Low Quiescent Currents
- Single Control Voltage for Each Channel
- 6 x 4 mm Chip Scale Package
- Test Boards with Vector Modulators are Available
- Tape and Reel Packaging Available
- PQFN Package

Description

M/A-COM's MADRCC0002 is a dual, break point free driver that produces a logarithmic output current suitable for linearizing PIN diode based vector modulators. This driver, in conjunction with the external components, as defined in Figure 1, produces a linearized transfer function between the input control voltage of the driver and the attenuation / phase output of the vector modulator. The MADRCC0002 has been optimized for linearizing M/A-COM's Vector Modulators (see Table 1), but will function well with most types of cathode grounded vector modulators. The driver is packaged in a 6 x 4 mm Chip Scale Package for commercial SMT applications. A typical schematic for a dual linearizer driving a vector modulator is shown in Figure 1.

Circuit Description:

(Reference Figures 1, 2 and 3)

Note that this is a dual driver. Only the top circuit will be described, because the bottom circuit is identical. The input divider, R1 and the sum of R2 and R3, sets the overall transfer function of the circuit. To increase the transfer function, decrease the Control Voltage and the value of R1. Temperature compensation is a function of the temperature coefficient of the thermistor, R3, and the ratio of R2 to R3, and can only be optimized once the transfer function and linearity component values have been established. Varying the value of R4 will optimize the linearity of the VVA. One can achieve a more linear transfer function by driving the attenuator over a smaller portion of its dynamic range. Note that when the vector modulators called out in Table 1 are driven with the dual linearizer, both amplitude and phase are affected, which makes it hard to define linearity. The individual transfer function of each voltage variable attenuator in the vector modulator (See Figure 2 for the block diagram) is linearized as a function of voltage. The two VVAs in the block diagram are the quad hybrids that are terminated by two PIN diodes. See Figure 3 for the transfer function of the SA90-0001 vector modulator (phase and attenuation vs. control voltages).

Ordering Information

Part Number	Package
MADRCC0002	Bulk Packaging
MADRCC0002TR	Tape & Reel (1K Reel)
MAMDCC0005-DC000	Test Board with Circuit per Figure 1 (MAMDCC0005, GSM Vector Modulator)
MAMDCC0002-DC000	Test Board with Circuit per Figure 1 (MAMDCC0002, PCS Vector Modulator)
SA90-0001-DC000	Test Board with Circuit per Figure 1 (SA90-0001, UMTS Vector Modulator

Note: Reference Application Note M513 for reel size information.

M/A-COM Technology Solutions Inc. (MACOM) and its affiliates reserve the right to make changes to the product(s) or information contained herein without notice.
Visit www.macom.com for additional data sheets and product information.

For further information and support please visit:
https://www.macom.com/support

Electrical Specifications: T_A = 25°C, Z_0 = 50Ω, Reference Figure 1 (Each Circuit)

Parameter	Test Conditions	Units	Min	Typ	Max
Output Drive Current	Vcontrol = V_{CC}	mA	20	—	—
+V_{CC} Supply Range	—	V	4.5	5.0	5.5
IN, REF Voltage	—	V	0	—	V_{CC}
+V_{CC} Quiescent Current	No Load	µA	—	50	70
Settling Time	50% Ctl to 90%/10% RF	µS	—	25	—

Figure 1

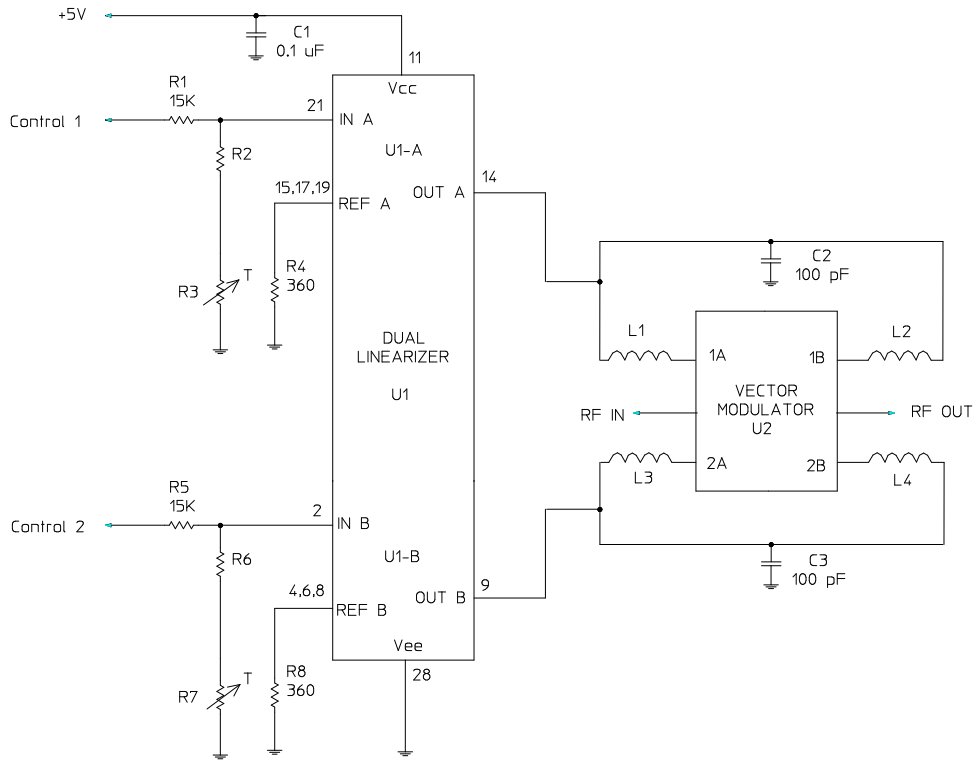

Note:
1. Control Voltages are 0.0 to 5.0 V
2. R3, R7 are Positive Temperature Coefficent Thermistors
   Suggested part numbers are Quality Thermistor, Inc. QT0805-xxxK
   "xxx" is defined in Table 1.
3. R1 will control the overall transfer rate for U1-A; R5 for U1-B.
4. R4 will control the ripple of the tranfer rate for U1-A; R8 for U1-B.
5. Unmarked Pins are to be left open. Detail Data Sheets define ground pins.
6. Resistor Tolerance is ± 2%
7. See Table 1 for values of R2, R3, R6, R7, L1, L2, L3 and L4.

M/A-COM Technology Solutions Inc. (MACOM) and its affiliates reserve the right to make changes to the product(s) or information contained herein without notice.
Visit www.macom.com for additional data sheets and product information.

For further information and support please visit:
https://www.macom.com/support

Table 1. Inductor Selection for M/A-COM Vector Modulators

Vector Modulator	Frequency Range (MHz)	Coil Craft P/N L1 - L4	Description of L1 - L4	Resistor Values R2, R6	Thermistor Values R3, R7	Quality Thermistor P/N for R3, R7
MAIA-007099-000100	925-960 (GSM)	0603CS-68NXJBC	Inductor, 68 nH, ± 5%	270 Ohms	750 Ohms	QT0805-751K
MAIA-007100-000100	1930-1990 (PCS)	0603CS-27NXJBC	Inductor, 27 nH, ± 5%	360 Ohms	680 Ohms	QT0805-681K
MAIA-007150-000100	2040-2240 (UMTS)	0603CS-27NXJBC	Inductor, 27 nH, ± 5%	270 Ohms	750 Ohms	QT0805-751K

Recommended PCB Configuration

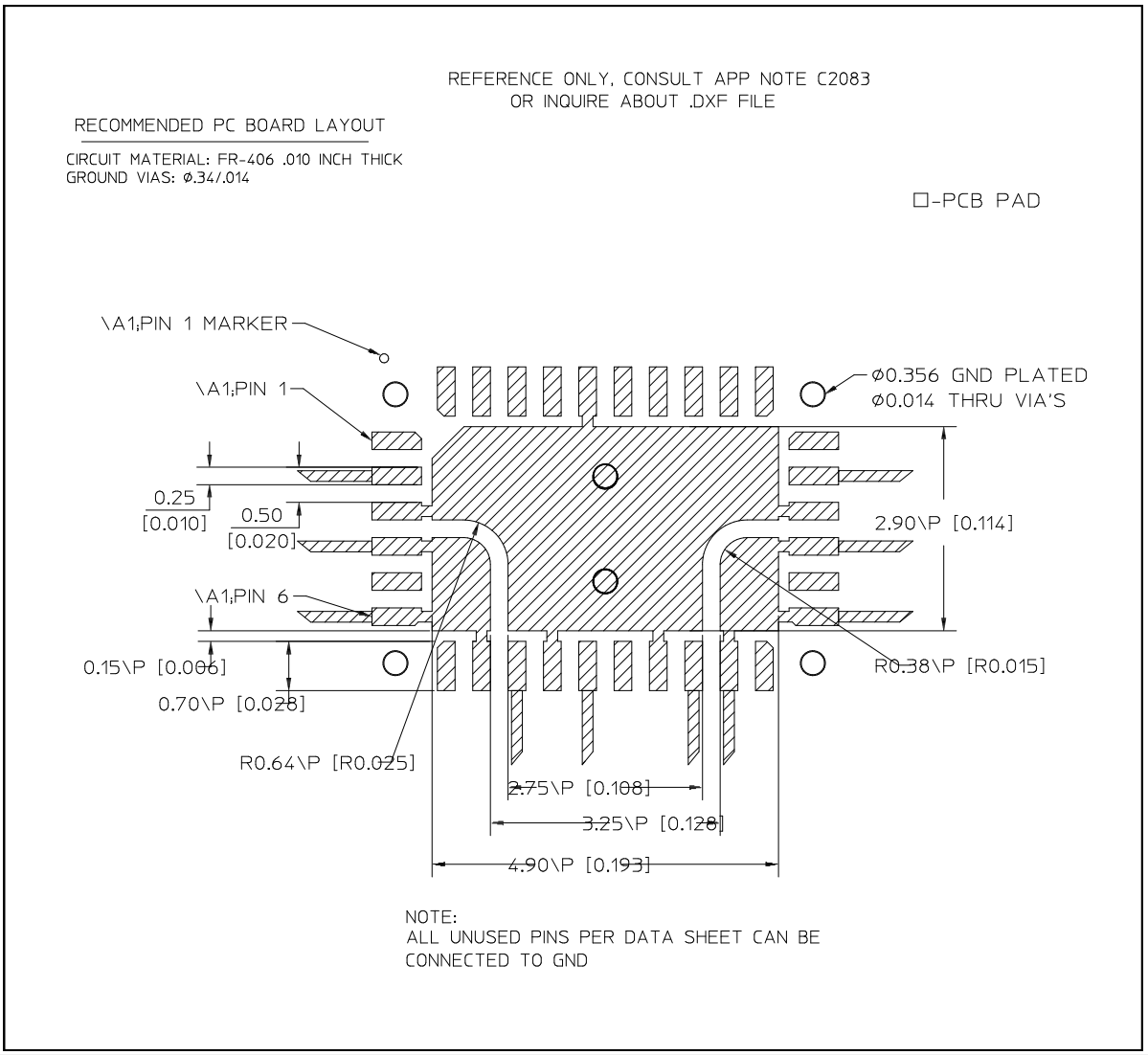

M/A-COM Technology Solutions Inc. (MACOM) and its affiliates reserve the right to make changes to the product(s) or information contained herein without notice.
Visit www.macom.com for additional data sheets and product information.

For further information and support please visit:
https://www.macom.com/support

Pin Configuration

Pin No.	Function	Pin No.	Function
1	NC	17	REF A
2	IN B	18	NC
3	NC	19	REF A
4	REF B	20	NC
5	NC	21	IN A
6	REF B	22	NC
7	NC	23	NC
8	REF B	24	NC
9	OUT B	25	NC
10	NC	26	NC
11	Vcc	27	NC
12	NC	28	GND
13	NC	29	NC
14	OUT A	30	NC
15	REF A	31	NC
16	NC	32	NC

The exposed pad centered on the package bottom must be connected to RF and DC ground. (For PQFN Packages)

Absolute Maximum Ratings [1,2]

Parameter	Absolute Maximum
$+V_{CC}$	+20 V
IN A, IN B	-0.5V ≤ Input ≤ Vcc +0.5V
REF A, REF B	-0.5V ≤ Input ≤ Vcc +0.5V
Output Short Circuit Duration[3]	Continuous
Operating Temperature	-40°C to +85°C
Storage Temperature	-65°C to +125°C
Package Power Dissipation Control Voltage	150 mW
Lead Temperature	300ºC for 10 seconds

1. Exceeding any one or combination of these limits may cause permanent damage to this device.
2. M/A-COM does not recommend sustained operation near these survivability limits.
3. Additional heat sinking may be required for a continuous output short circuit to ground, to keep the junction temperature of the amplifier below 150°C.

Handling Procedures

Please observe the following precautions to avoid damage:

Static Sensitivity

Silicon Integrated Circuits are sensitive to electrostatic discharge (ESD) and can be damaged by static electricity. Proper ESD control techniques should be used when handling these devices.

M/A-COM Technology Solutions Inc. (MACOM) and its affiliates reserve the right to make changes to the product(s) or information contained herein without notice.
Visit www.macom.com for additional data sheets and product information.

For further information and support please visit:
https://www.macom.com/support

4x6 mm, 32-lead PQFN†

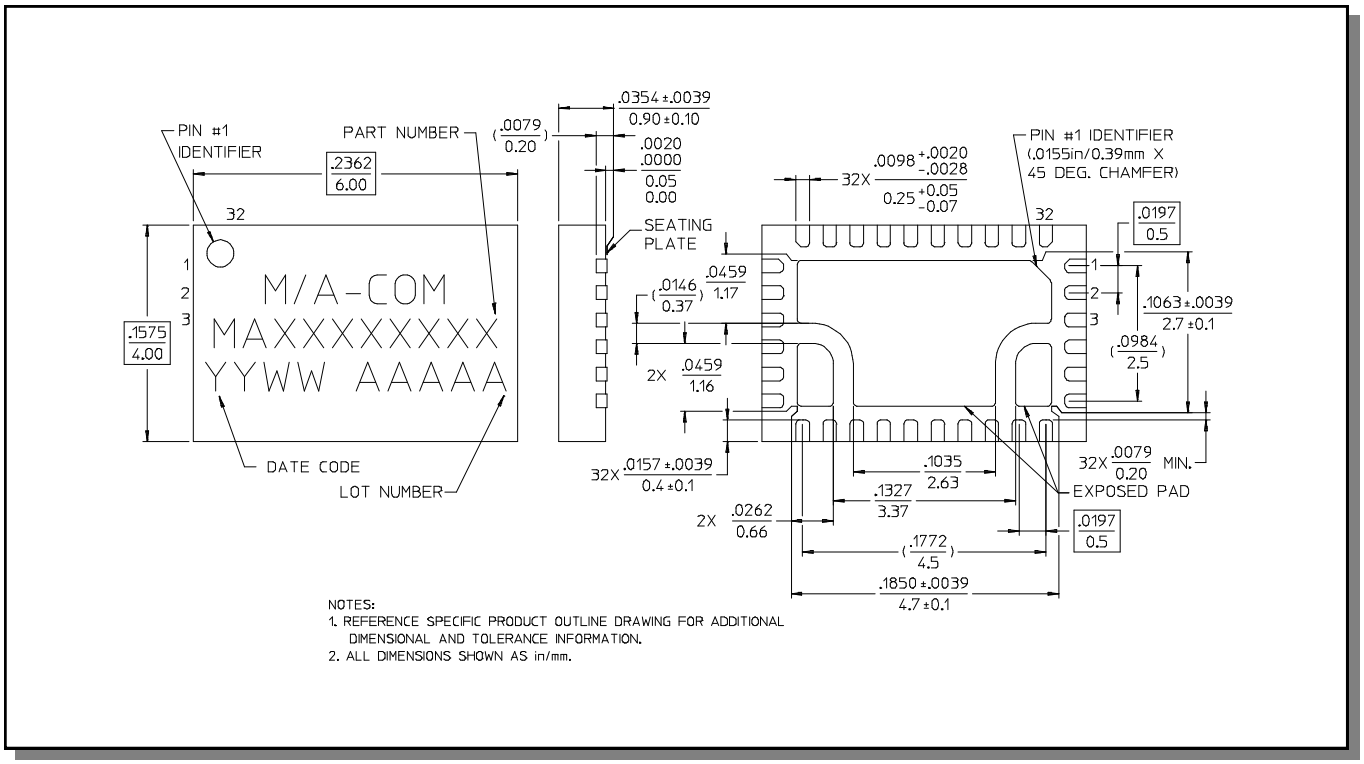

† Reference Application Note M538 for lead-free solder reflow recommendations.

M/A-COM Technology Solutions Inc. (MACOM) and its affiliates reserve the right to make changes to the product(s) or information contained herein without notice.
Visit www.macom.com for additional data sheets and product information.

For further information and support please visit:
https://www.macom.com/support

Figure 3A - Phase and Attenuation of SA90-0001, Vector Modulator Linearized with MADRCC0002 Linearizer [3,4,5,6]

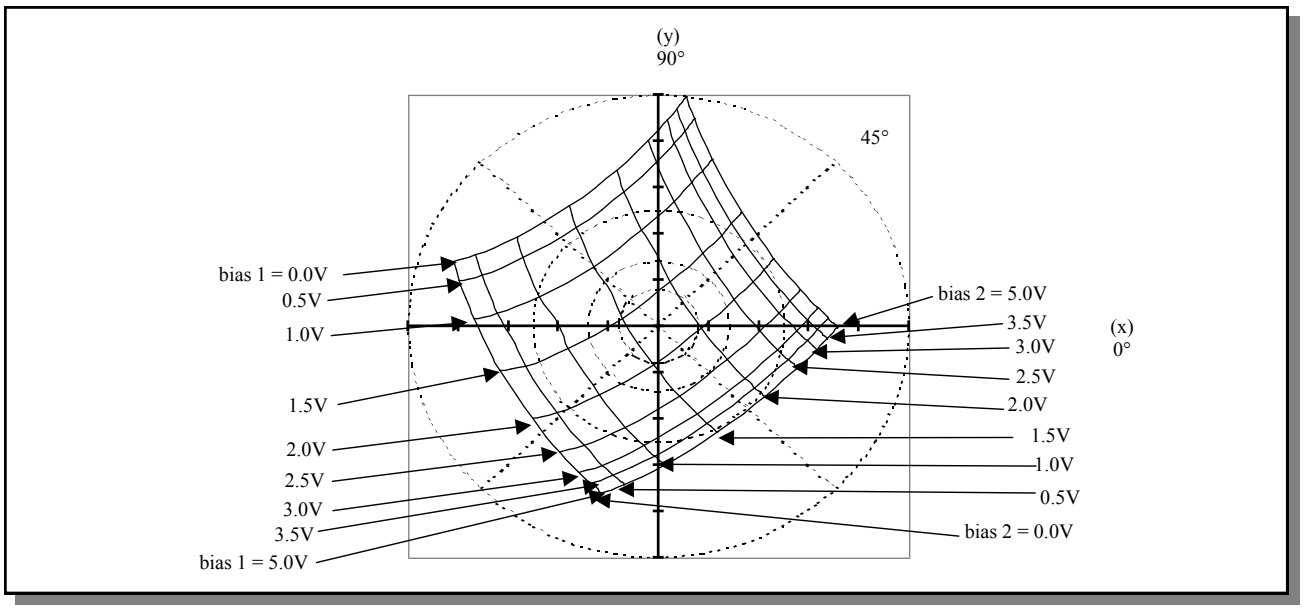

Figure 3B

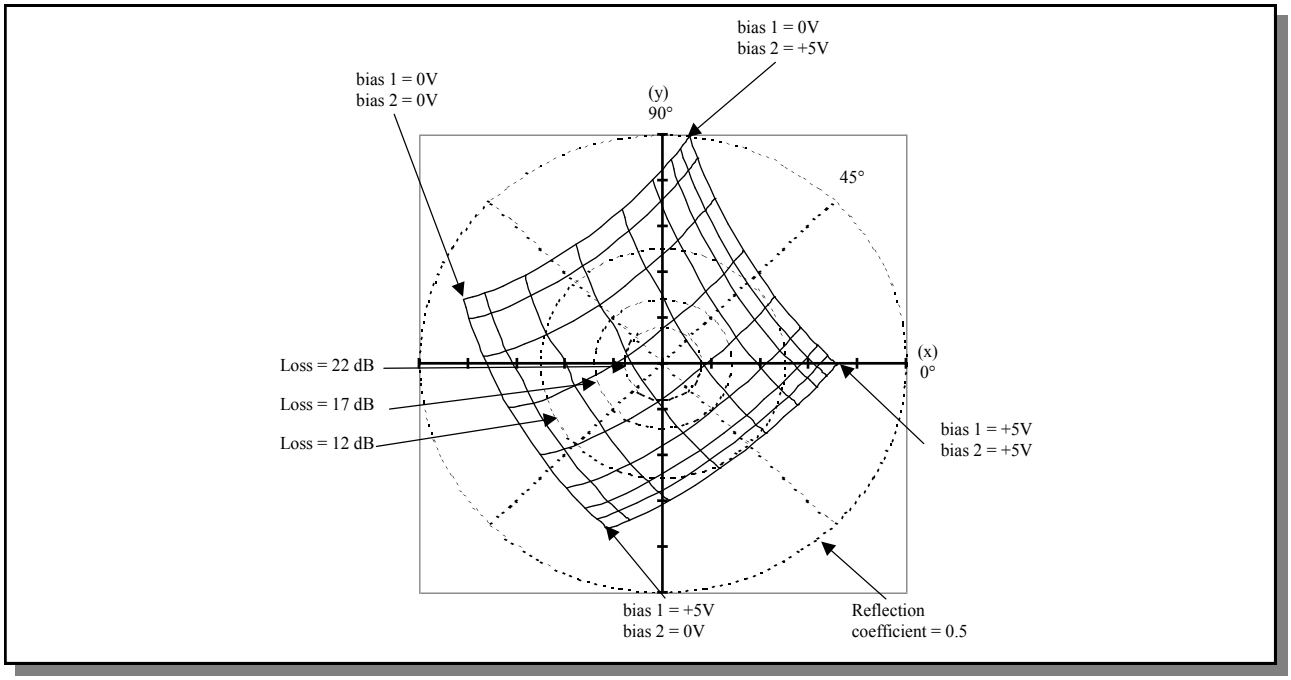

3. Tic marks on x,y axes refer to reflection coefficient in increments of 0.1V. Reflection coefficients vary from -0.5 to +0.5 on both the x and y axes.
4. Data is for vector modulators driven by linearizers per attached schematic.
5. Inputs to the linearizers vary from 0 to 5V.
6. The phase with the inputs to both linearizers set to +5V is arbitrarily called zero degrees.

M/A-COM Technology Solutions Inc. (MACOM) and its affiliates reserve the right to make changes to the product(s) or information contained herein without notice.
Visit www.macom.com for additional data sheets and product information.

For further information and support please visit:
https://www.macom.com/support

Figure 2—Block Diagram
Vector Modulator

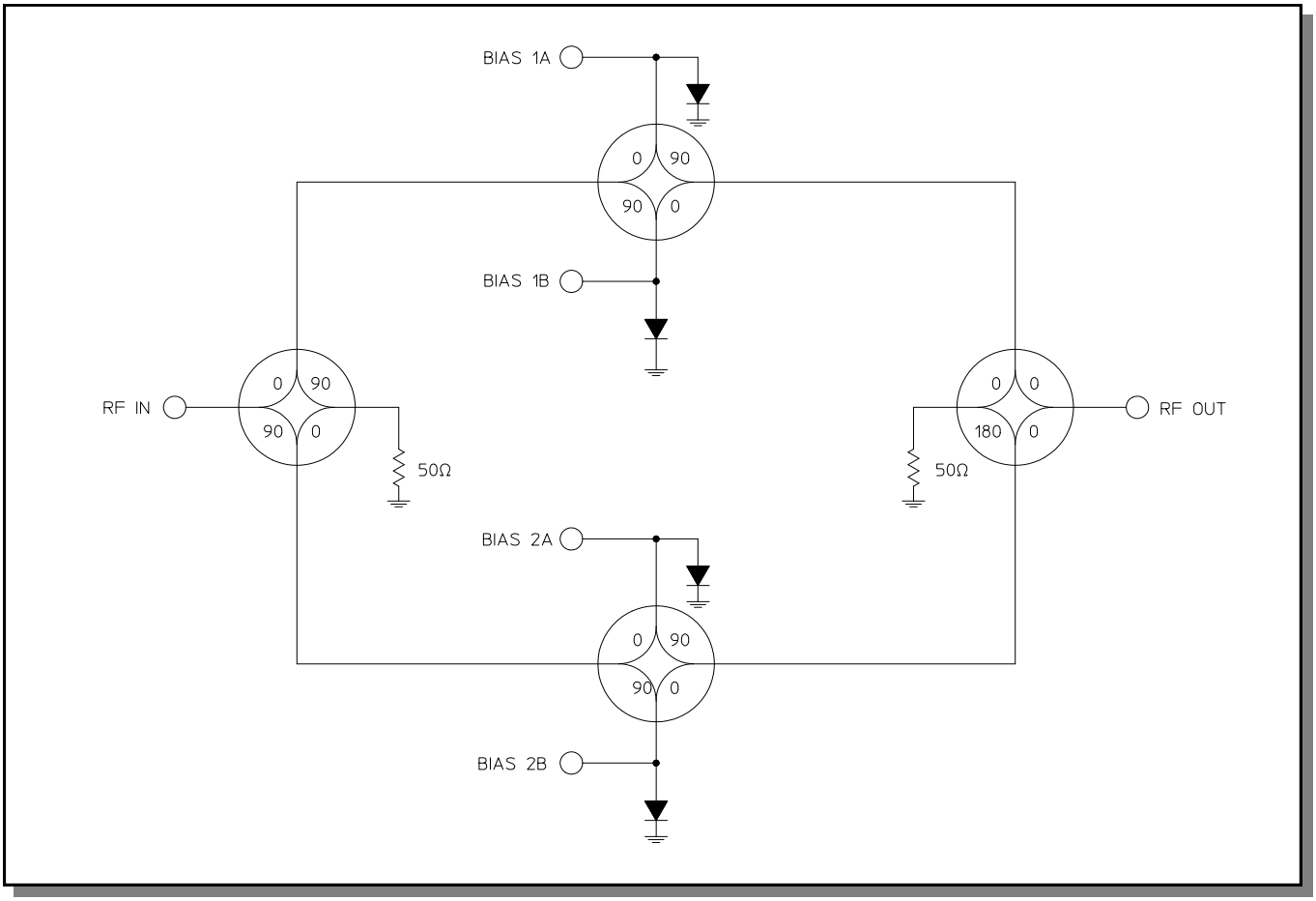

M/A-COM Technology Solutions Inc. (MACOM) and its affiliates reserve the right to make changes to the product(s) or information contained herein without notice.
Visit www.macom.com for additional data sheets and product information.

For further information and support please visit:
https://www.macom.com/support

M/A-COM Technology Solutions Inc. All rights reserved.

Information in this document is provided in connection with M/A-COM Technology Solutions Inc ("MACOM") products. These materials are provided by MACOM as a service to its customers and may be used for informational purposes only. Except as provided in MACOM's Terms and Conditions of Sale for such products or in any separate agreement related to this document, MACOM assumes no liability whatsoever. MACOM assumes no responsibility for errors or omissions in these materials. MACOM may make changes to specifications and product descriptions at any time, without notice. MACOM makes no commitment to update the information and shall have no responsibility whatsoever for conflicts or incompatibilities arising from future changes to its specifications and product descriptions. No license, express or implied, by estoppels or otherwise, to any intellectual property rights is granted by this document.

THESE MATERIALS ARE PROVIDED "AS IS" WITHOUT WARRANTY OF ANY KIND, EITHER EXPRESS OR IMPLIED, RELATING TO SALE AND/OR USE OF MACOM PRODUCTS INCLUDING LIABILITY OR WARRANTIES RELATING TO FITNESS FOR A PARTICULAR PURPOSE, CONSEQUENTIAL OR INCIDENTAL DAMAGES, MERCHANTABILITY, OR INFRINGEMENT OF ANY PATENT, COPYRIGHT OR OTHER INTELLECTUAL PROPERTY RIGHT. MACOM FURTHER DOES NOT WARRANT THE ACCURACY OR COMPLETENESS OF THE INFORMATION, TEXT, GRAPHICS OR OTHER ITEMS CONTAINED WITHIN THESE MATERIALS. MACOM SHALL NOT BE LIABLE FOR ANY SPECIAL, INDIRECT, INCIDENTAL, OR CONSEQUENTIAL DAMAGES, INCLUDING WITHOUT LIMITATION, LOST REVENUES OR LOST PROFITS, WHICH MAY RESULT FROM THE USE OF THESE MATERIALS.

MACOM products are not intended for use in medical, lifesaving or life sustaining applications. MACOM customers using or selling MACOM products for use in such applications do so at their own risk and agree to fully indemnify MACOM for any damages resulting from such improper use or sale.