HMIC™ PIN Diode SP2T 20 W Switch for 0.05 - 6.0 GHz High Power Applications

MASW-000825

Rev. V6

Features

- Exceptional Broadband Performance
- Low Loss:
  T_X = 0.24 dB @ 2.025 GHz, 35 mA
  T_X = 0.38 dB @ 3.500 GHz, 35 mA
- High Isolation:
  R_X = 31 dB @ 2.025 GHz, 35 mA
  R_X = 27 dB @ 3.500 GHz, 35 mA
- High RF CW Input Power:
  20 W CW (T_X Ant Port)
- Higher IP3:
  >34 dBm (T_X Ant Port)
- Surface Mount 3 mm 12 Lead PQFN Package
- RoHS* Compliant

Applications

- Suitable for High Power TD-SCDMA & WiMax

Description

The MASW-000825 is a 0.05 - 6.0 GHz SP2T PIN diode switch assembled is a lead-free compact 3 mm PQFN plastic package. This high peak and average power switch offers extraordinary performance with excellent isolation to loss ratio for both the T_X and R_X States. This SP2T also provides outstanding 20 W CW power handling coupled with 64 dBm IIP3 for maximum switch performance.

This PIN diode switch is ideally suited for T/R or LNA Protect Switch applications such as WiMax and TD-SCDMA.

This device incorporates a PIN diode die fabricated with MACOMs patented Silicon-Glass HMIC™ process. This chip features two silicon pedestals embedded in a low loss, low dispersion glass. The diodes are formed on the top of each pedestal. The topside is fully encapsulated with silicon nitride and has an additional polymer passivation layer. These polymer protective coatings prevent damage and contamination during handling and assembly.

Functional Schematic

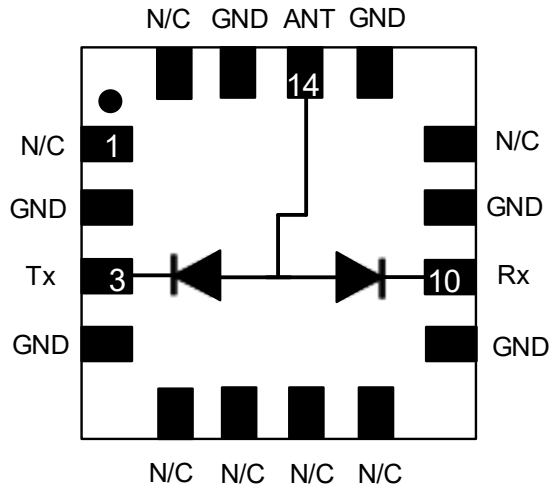

Pin Configuration[1]

Pin #	Function
1, 5 - 8, 12, 16	N/C
2, 4, 9, 11, 13, 15	GND
3	T_X
10	Rx
14	Ant

1. The exposed pad centered on the package bottom must be connected to RF, DC and thermal ground.

Ordering Information[2]

Part Number	Package
MASW-000825-12770T	1000 piece reel, 7 inch
MASW-000825-001SMB	Sample Board

2. Reference Application Note M513 for reel size information.

* Restrictions on Hazardous Substances, compliant to current RoHS EU directive.

MACOM Technology Solutions Inc. (MACOM) and its affiliates reserve the right to make changes to the product(s) or information contained herein without notice.
Visit www.macom.com for additional data sheets and product information.

For further information and support please visit:
https://www.macom.com/support

Electrical Specifications[3]: T_A = 25°C, Z_0 = 50 Ω, Bias = 35 mA / 28 V, P_{INC} = 0 dBm

Parameter	Test Conditions	Units	Min.	Typ.	Max.
Insertion Loss, R_X	2.0 - 2.7 GHz 3.3 - 3.8 GHz 4.9 - 5.9 GHz	dB	—	0.42 0.56 0.95	0.55 0.71 1.10
Insertion Loss, T_X	2.0 - 2.7 GHz 3.3 - 3.8 GHz 4.9 - 5.9 GHz	dB	—	0.29 0.38 0.59	0.38 0.48 0.71
Isolation, T_X to R_X	2.0 - 2.7 GHz 3.3 - 3.8 GHz 4.9 - 5.9 GHz	dB	24.5 22.0 19.5	28.6 26.0 22.4	—
Isolation, R_X to T_X	2.0 - 2.7 GHz 3.3 - 3.8 GHz 4.9 - 5.9 GHz	dB	21.3 19.7 16.5	24.2 21.6 18.5	—
Input Return Loss, T_X	2.0 - 2.7 GHz 3.3 - 3.8 GHz 4.9 - 5.9 GHz	dB	—	-28 -28 -25	—
Input Return Loss, R_X	2.0 - 2.7 GHz 3.3 - 3.8 GHz 4.9 - 5.9 GHz	dB	—	-28 -28 -24	—

3. See Bias Table

Electrical Specifications[4,5]: T_A = +25°C, Characteristic Impedance, Z_0 = 50 Ω

Parameter	Conditions	Units	Min.	Typ.	Max.
T_X 2nd Harmonic	T_X = 5 V @ 35 mA, R_X = 28 V @ 0 mA Fo = 2.010 GHz, P_{IN} = 30 dBm, T_X to Antenna	dBc	—	-70	—
T_X 3rd Harmonic	T_X = 5 V @ 35 mA, R_X = 28 V @ 0 mA Fo = 2.010 GHz, P_{IN} = 30 dBm, T_X to Antenna	dBc	—	-86	—
T_X Input Third Order Intercept Point	T_X = 5 V @ 35 mA, R_X = 28 V @ 0 mA F1 = 2.010 GHz, F2 = 2.020 GHz, P_{IN} = 20 dBm, T_X to Antenna	dBm	—	64	—
T_X CW Input Power	T_X = 5 V @ 35 mA, R_X = 28 V @ 0 mA F = 2.010, 3.500 GHz, T_X to Antenna	dBm W	—	—	43 20
T_X Peak Input Power	T_X = 5 V @ 35 mA, R_X = 28 V @ 0 mA F = 2.010 GHz, T_X to Antenna (5 µs RF Pulse Width, 1% Duty 1.10:1 Ant VSWR)	dBm W	—	—	53 200
R_X CW Input Power	R_X = 5 V @ 35 mA, T_X = 28 V @ 0 mA F = 2.010 GHz, Antenna to R_X	dBm W	—	—	39 8
T_X Input P1dB[6]	T_X = 5 V @ 35 mA, R_X = 28 V @ 0 mA F = 2.010 GHz, T_X to Antenna	dBm	—	>43	—
T_X RF Switching Speed	T_X = 5 V @ 35 mA, R_X = 28 V @ 0 mA F = 2.010 GHz, T_X to Antenna (10% - 90% RF Voltage) 1 MHz Rep Rate in Modulating Mode	ns	—	200	—

4. Typical PIN diode forward voltage = 0.9 V @ 35 mA for insertion loss.
5. Typical PIN diode reverse voltage = 28 V - 1 V = 27 V for isolation.
6. Switch is asymmetrical, 43 dBm RF CW input power applies to T_X port only.

MACOM Technology Solutions Inc. (MACOM) and its affiliates reserve the right to make changes to the product(s) or information contained herein without notice.
Visit www.macom.com for additional data sheets and product information.

For further information and support please visit:
https://www.macom.com/support

Bias Table

Port	Tx pin 3	Rx pin 10	ANT pin 14
T_X-ANT Isolation	28 V @ 0 mA	0 V	5 V @ 35 mA
T_X-ANT Insertion Loss	0 V	28 V @ 0 mA	5 V @ 35 mA
R_X-ANT Isolation	0 V	28 V @ 0 mA	5 V @ 35 mA
R_X-ANT Insertion Loss	28 V @ 0 mA	0 V	5 V @ 35 mA

Absolute Maximum Ratings[7,8]
@ T_A = +25°C (unless otherwise specified)

Parameter	Absolute Maximum
Forward Current	100 mA
DC Reverse Voltage	140 V
Tx Incident CW Power	20 W CW
Tx Peak Incident Power	150 W, 5 µs Pulse Width, 1% Duty Cycle
Junction Temperature	+175°C
Operating Temperature	-40°C to +85°C
Storage Temperature	-55°C to +150°C

7. Exceeding any one or combination of these limits may cause permanent damage to this device.
8. MACOM does not recommend sustained operation near these survivability limits.

Minimum Reverse Bias Voltage[9]

Frequency (MHz)	DC Voltage (V)
50	54
500	50
1000	43
2000	29
4000	17
6000	12

9. Minimum DC bias voltage to maintain low loss under 20 W of Tx power with 1.5:1 VSWR.

MACOM Technology Solutions Inc. (MACOM) and its affiliates reserve the right to make changes to the product(s) or information contained herein without notice.
Visit www.macom.com for additional data sheets and product information.

For further information and support please visit:
https://www.macom.com/support

Driver and SP2T Schematic with Positive Voltage[10,11,12]

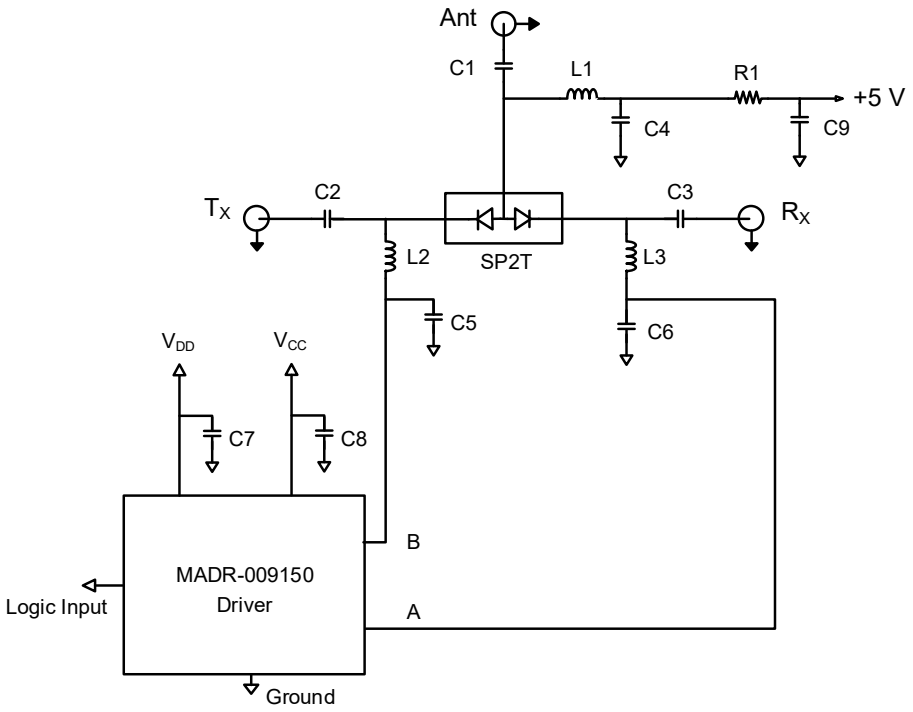

10. Center ground area of MLP 3 mm package must be attached to thermal ground for optimum RF power performance.
11. MACOM recommends the usage of the **MADR-009150** driver with this switch.
12. Assembly Note: A typical soldering process profile and handling instructions are provided in Application Notes, S2083 “Surface Mount Instructions for QFN / DFN Packages” on the MACOM website at www.macom.com.

Parts List

Port	Value
C1 - C3	27 pF, 100 V
C4	1000 pF
C5, C6	50 pF
C7 - C9	0.1 µF
L1, L3	47 nH
R1	120 Ω

MACOM Technology Solutions Inc. (MACOM) and its affiliates reserve the right to make changes to the product(s) or information contained herein without notice.
Visit www.macom.com for additional data sheets and product information.

For further information and support please visit:
https://www.macom.com/support

DC Bias to RF Truth Table

RF State	TTL & DC Bias Conditions	Voltage at Common Anode
Low Loss T_X-Ant & Isolation T_X-R_X	TTL = 1 5 V @ 35 mA (T_X), 28 V @ 0 mA (R_X)	0.9 V
Low Loss Ant-R_X & Isolation R_X-T_X	TTL = 0 5 V @ 35 mA (R_X), 28 V @ 0 mA (T_X)	0.9 V

Cross Section View of MACOM PCB

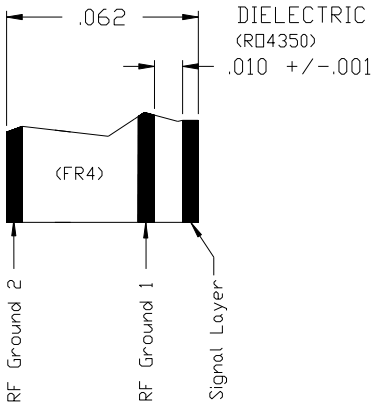

Handling Procedures

Please observe the following precautions to avoid damage:

Static Sensitivity

These electronic devices are sensitive to electrostatic discharge (ESD) and can be damaged by static electricity. Proper ESD control techniques should be used when handling these Class 1B Human Body devices.

MACOM Technology Solutions Inc. (MACOM) and its affiliates reserve the right to make changes to the product(s) or information contained herein without notice.
Visit www.macom.com for additional data sheets and product information.

For further information and support please visit:
https://www.macom.com/support

Typical Small Signal Performance @ +25°C, Characteristic Impedance, Z_0 = 50 Ω

Insertion Loss, 5 V, 35 mA

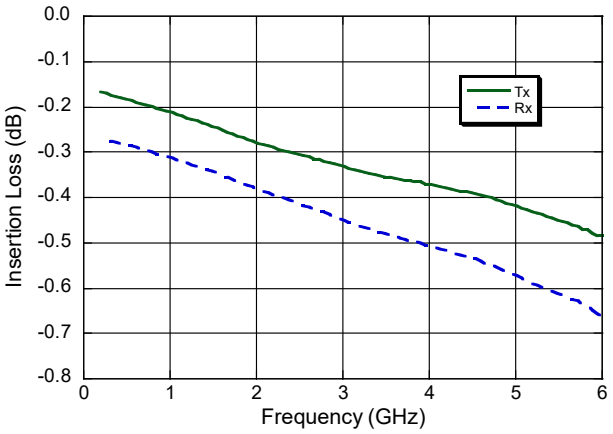

Isolation, 28 V, 0 mA

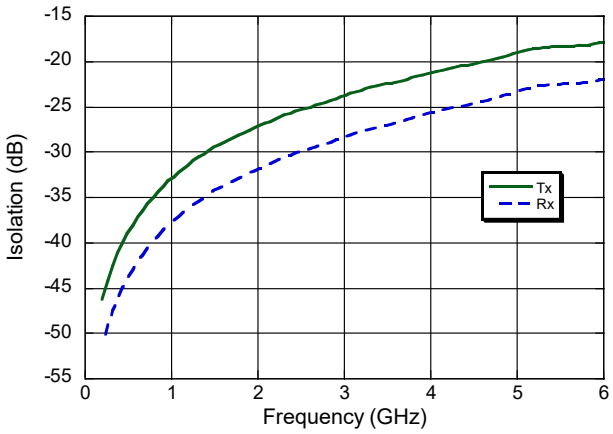

Return Loss, 5 V, 35 mA

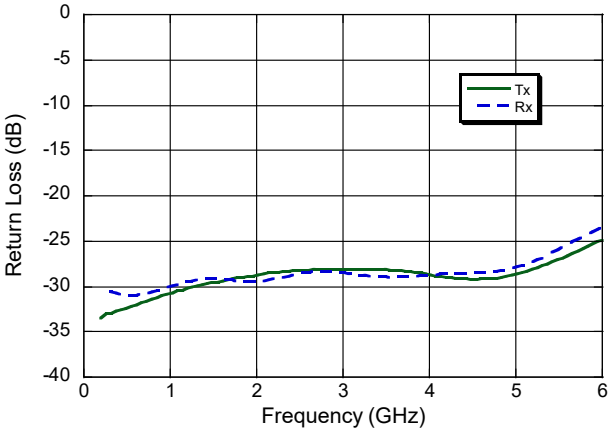

Thermal Junction T_X vs. Input Power
T_X = 5 V @ 20mA & 30 mA, R_X = 25 V @ 0 mA,
T_X to Antenna, F_0 = 2010 MHz

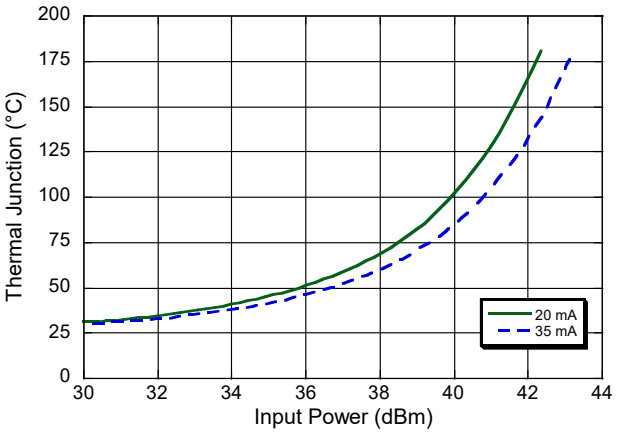

Input Power vs. PCB/Heatsink Temperature
T_X = 5 V @ 20mA & 30 mA, R_X = 25 V @ 0 mA,
T_X to Antenna, F_0 = 2010 MHz

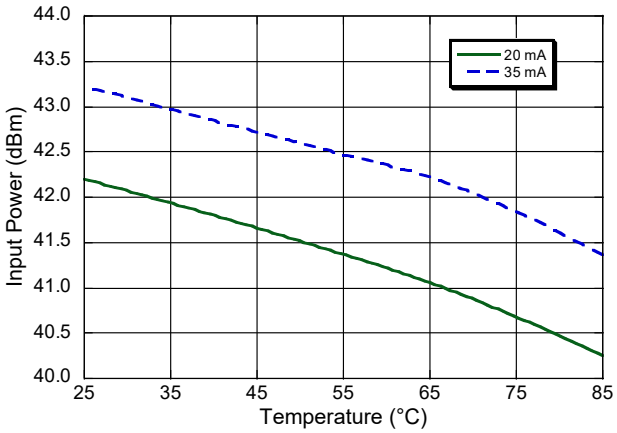

MACOM Technology Solutions Inc. (MACOM) and its affiliates reserve the right to make changes to the product(s) or information contained herein without notice.
Visit www.macom.com for additional data sheets and product information.

For further information and support please visit:
https://www.macom.com/support

Typical Small Signal Performance @ +25°C, Characteristic Impedance, Z_0 = 50 Ω

Insertion Loss T_X vs. Temperature (5 V, 35 mA)

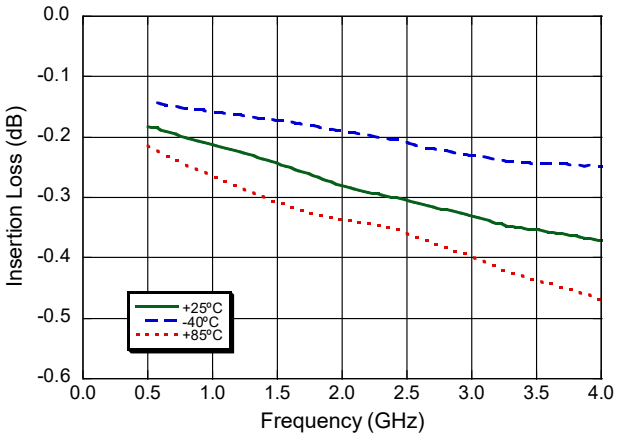

Insertion Loss R_X vs. Temperature (5 V, 35 mA)

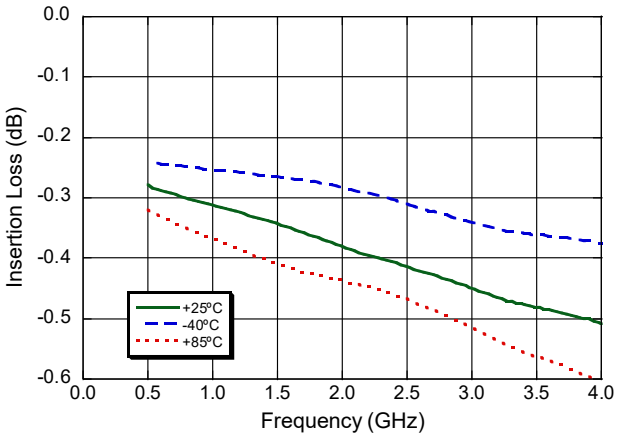

Isolation T_X vs. Temperature (28 V, 0 mA)

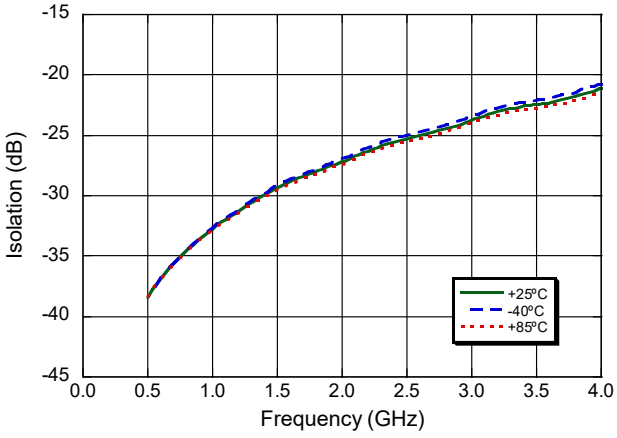

Isolation R_X vs. Temperature (28 V, 0 mA)

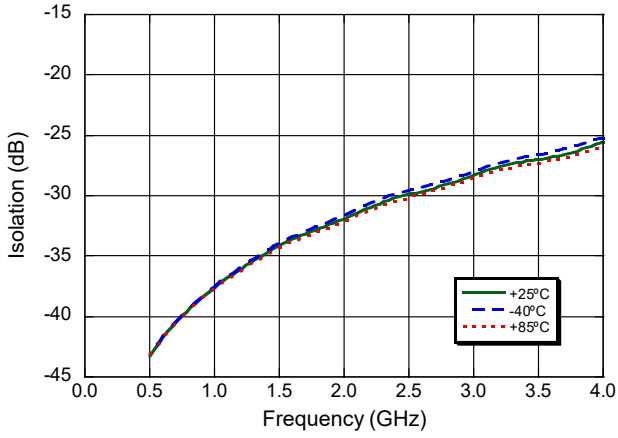

Return Loss T_X vs. Temperature (5 V, 35 mA)

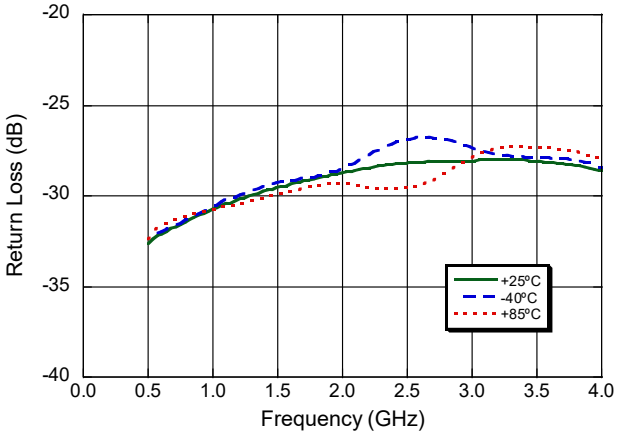

Return Loss R_X vs. Temperature (5 V, 35 mA)

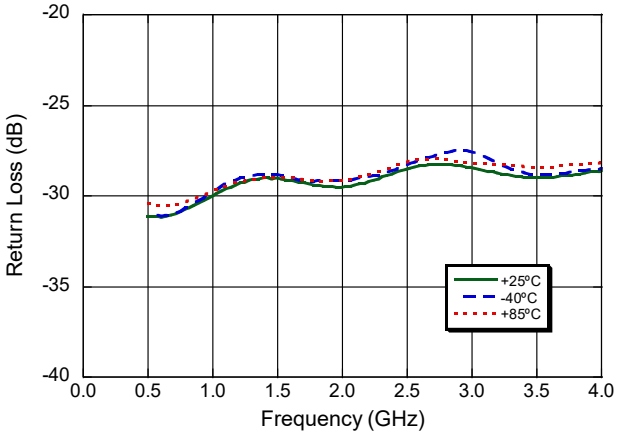

MACOM Technology Solutions Inc. (MACOM) and its affiliates reserve the right to make changes to the product(s) or information contained herein without notice.
Visit www.macom.com for additional data sheets and product information.

For further information and support please visit:
https://www.macom.com/support

Lead-Free 3 mm 16-Lead PQFN†

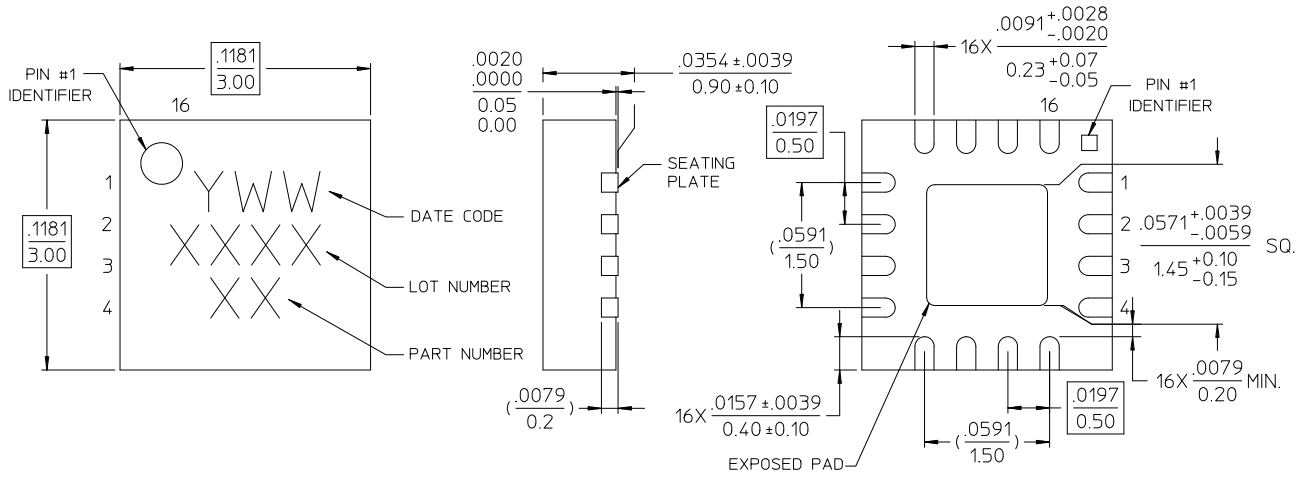

NOTES:
1. REFERENCE JEDEC MO-220, VAR. VEED-6 FOR ADDITIONAL DIMENSIONAL AND TOLERANCE INFORMATION.
2. REFERENCE S2083 APPLICATION NOTE FOR PCB FOOTPRINT INFORMATION.
3. ALL DIMENSIONS SHOWN AS INCHES/MM.

† Reference Application Note S2803 for lead-free solder reflow recommendations.
Meets JEDEC moisture sensitivity level (MSL) 1 requirements.

MACOM Technology Solutions Inc. (MACOM) and its affiliates reserve the right to make changes to the product(s) or information contained herein without notice.
Visit www.macom.com for additional data sheets and product information.

For further information and support please visit:
https://www.macom.com/support

MACOM Technology Solutions Inc. (“MACOM”). All rights reserved.
These materials are provided in connection with MACOM’s products as a service to its customers and may be used for informational purposes only. Except as provided in its Terms and Conditions of Sale or any separate agreement, MACOM assumes no liability or responsibility whatsoever, including for (i) errors or omissions in these materials; (ii) failure to update these materials; or (iii) conflicts or incompatibilities arising from future changes to specifications and product descriptions, which MACOM may make at any time, without notice. These materials grant no license, express or implied, to any intellectual property rights.

THESE MATERIALS ARE PROVIDED "AS IS" WITH NO WARRANTY OR LIABILITY, EXPRESS OR IMPLIED, RELATING TO SALE AND/OR USE OF MACOM PRODUCTS INCLUDING FITNESS FOR A PARTICULAR PURPOSE, MERCHANTABILITY, INFRINGEMENT OF INTELLECTUAL PROPERTY RIGHT, ACCURACY OR COMPLETENESS, OR SPECIAL, INDIRECT, INCIDENTAL, OR CONSEQUENTIAL DAMAGES WHICH MAY RESULT FROM USE OF THESE MATERIALS.

MACOM products are not intended for use in medical, lifesaving or life sustaining applications. MACOM customers using or selling MACOM products for use in such applications do so at their own risk and agree to fully indemnify MACOM for any damages resulting from such improper use or sale.