MASW-004103-1365

Silicon SP4T Surface Mount HMIC PIN Diode Switch
50 MHZ - 20 GHz

Rev. V7

Features

- Operates 50 MHz to 20 GHz
- Usable up to 26 GHz
- Low Insertion Loss
- High Isolation
- Low Parasitic Capacitance and Inductance
- RoHS Compliant Surmount Package
- Rugged, Fully Monolithic
- Glass Encapsulated Construction
- Up to +38 dBm CW Power Handling @ +25°C
- Silicon Nitride Passivation
- Polymer Scratch Protection
- Solderable

Description

The MASW-004103-1365 is a SP4T, surmount, broadband, monolithic switch using four sets of series and shunt connected PIN diodes. This device is designed for use in broadband, low to moderate signal, high performance, switch applications up to 20 GHz. It is a surface mountable switch configured for optimized performance and offers a distinct advantage over MMIC, beamlead and chip and wire hybrid designs. Because the PIN diodes of the MASW-004103-1365 are integrated into the chip and kept within close proximity, the parasitics typically associated with other designs that use individual components are kept to a minimum.

To minimize the parasitics and achieve high performance the MASW-004103-1365 is fabricated using MACOMs' patented HMIC™ (Heterolithic Microwave Integrated Circuit) process. This process allows the silicon pedestals, which form the series and shunt diodes or vias, to be imbeded in low loss, low dispersion glass. The combination of low loss glass and using tight spacing between elements results in an HMIC device with low loss and high isolation through low millimeter wave frequencies.

The topside is fully encapsulated with silicon nitride and also has an additional layer of polymer for scratch and impact protection. The protective coating guards against damage to the junction and the anode airbridges during handling and assembly.

On the backside of the chip gold metalized pads have been added to produce a solderable surmount device.

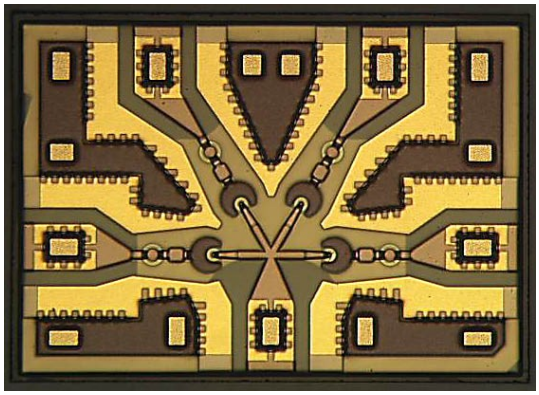

Functional Schematic

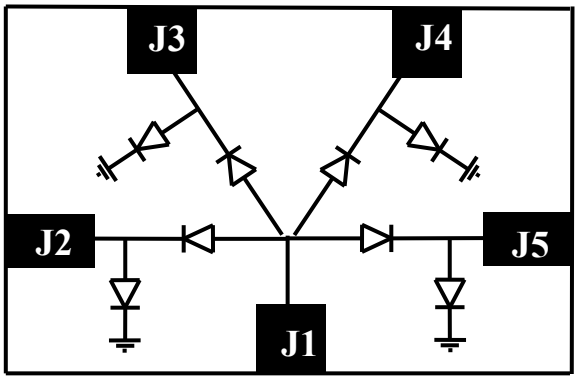

Pin Configuration

Pin	Function
J1	RFC
J2	RF1
J3	RF2
J4	RF3
J5	RF4

Ordering Information

Part #	Package
MASW-004103-13650G	50 piece gel pack
MASW-004103-13655P	500 piece reel
MASW-004103-13650P	3000 piece reel
MASW-004103-001SMB	Sample Test Board

MACOM Technology Solutions Inc. (MACOM) and its affiliates reserve the right to make changes to the product(s) or information contained herein without notice.
Visit www.macom.com for additional data sheets and product information.

Electrical Specifications: T_A = 25°C, P_{IN} = 0 dBm, Z_0 = 50 Ω, 20 mA, -10 V

Parameter	Conditions	Units	Min.	Typ.	Max.
Insertion Loss	6 GHz 13 GHz 20 GHz	dB	—	0.5 0.8 1.2	0.6 1.0 1.5
Isolation	6 GHz 13 GHz 20 GHz	dB	48 38 29	51 39 32	—
Input Return Loss	6 GHz 13 GHz 20 GHz	dB	17 13 12	21 17 16	—
Output to Output Isolation	6 GHz 13 GHz 20 GHz	dB	—	53.5 41.5 31.5	—
Input 0.1 dB Compression Point	2 GHz	dBm	—	36	—
IIP3	0.5 GHz, 5 MHz Spacing, 20 dBm 1 GHz, 10 MHz Spacing, 20 dBm 2 GHz, 10 MHz Spacing, 20 dBm	dBm	—	60 63 64	—
Switching Speed[1]	—	ns	—	20	—
Voltage Rating[2]	—	V	—	—	80

1. Typical Switching Speed measured from 10% to 90 % of detected RF signal driven by TTL compatible drivers.
2. Maximum reverse leakage current in either the shunt or series PIN diodes shall be 0.5 µA maximum @ -80 volts.

Absolute Maximum Ratings[3,4,5]

Parameter	Absolute Maximum
RF CW Incident Power 2 GHz 20 GHz	 38 dBm 33 dBm
Applied Reverse Voltage	|-80 V|
Junction Temperature	+175°C
Operating Temperature	-65°C to +125°C
Storage Temperature	-65°C to +150°C

3. Exceeding any one or combination of these limits may cause permanent damage to this device.
4. MACOM does not recommend sustained operation near these survivability limits.
5. Combined maximum operating conditions for RF power, DC bias, & temperature: 33 dBm CW, 20 mA per diode, +85ºC.

Handling Procedures

Please observe the following precautions to avoid damage:

Static Sensitivity

These electronic devices are sensitive to electrostatic discharge (ESD) and can be damaged by static electricity. Proper ESD control techniques should be used when handling these Class 1A HBM devices.

MACOM Technology Solutions Inc. (MACOM) and its affiliates reserve the right to make changes to the product(s) or information contained herein without notice.
Visit www.macom.com for additional data sheets and product information.

Typical Performance Curves: 20 mA, -10 V (On-Wafer Probed)

Insertion Loss

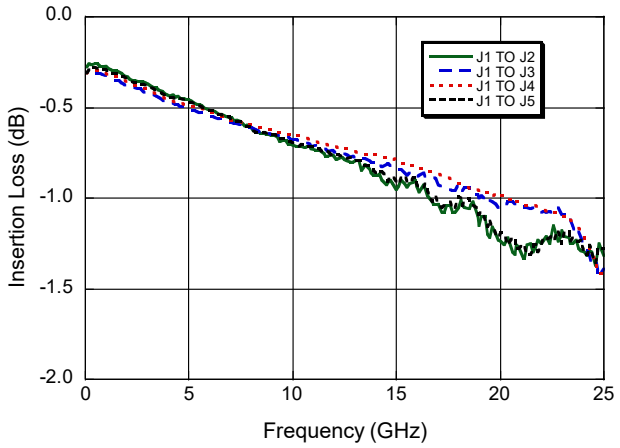

Isolation

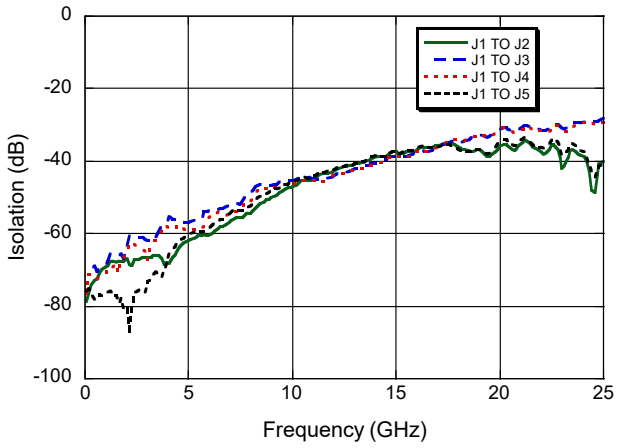

Input Return Loss

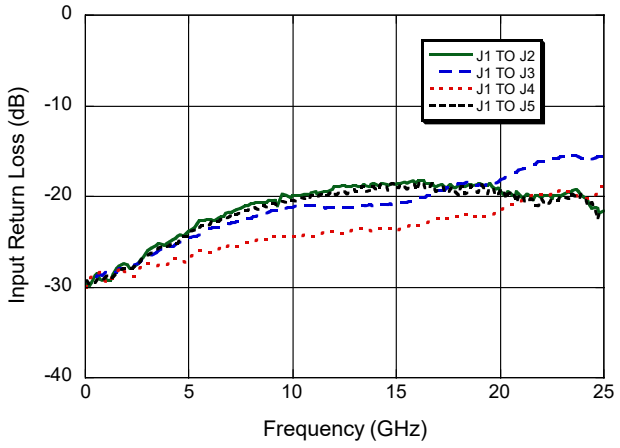

Output Return Loss

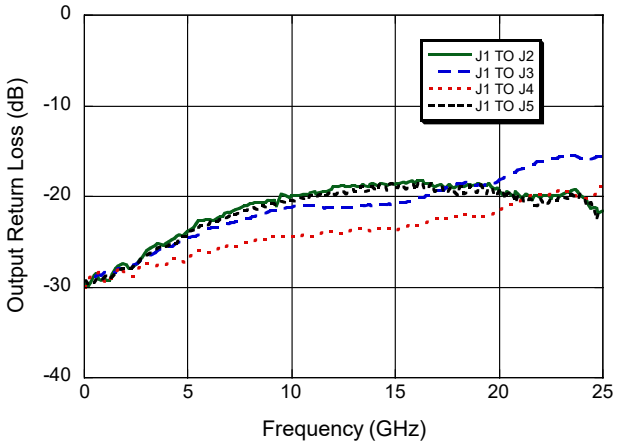

Output to Output Isolation

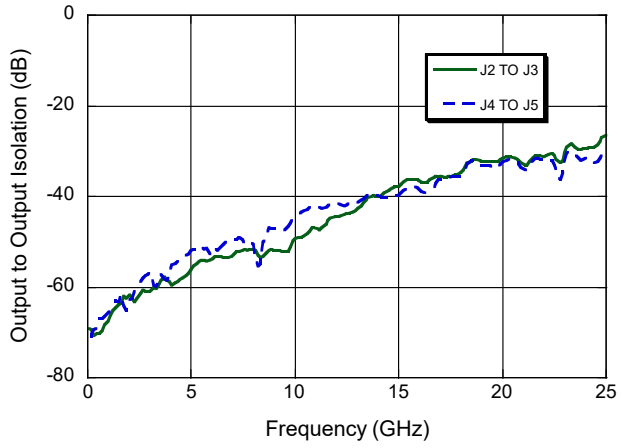

Maximum Input Power,
Baseplate Temperature fixed @ 25°C

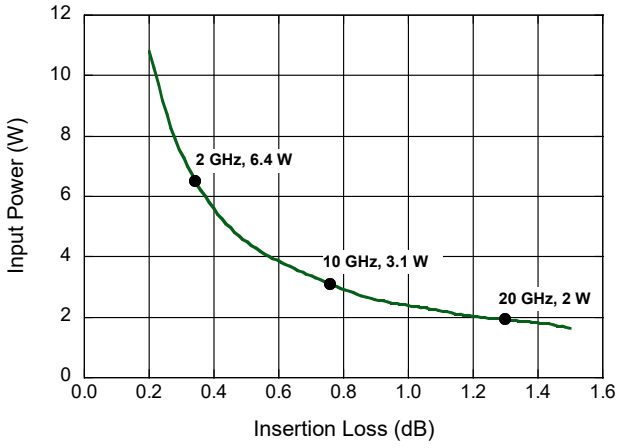

MACOM Technology Solutions Inc. (MACOM) and its affiliates reserve the right to make changes to the product(s) or information contained herein without notice.
Visit www.macom.com for additional data sheets and product information.

Bias Control

Optimal operation of the MASW-004103-1365 is achieved by simultaneous application of negative DC voltage and current to the low loss switching arm and positive DC voltage and current to the remaining switching arms as shown in the applications circuit below. DC return is achieved via R2 on the RFC path. In the low loss state, the series diode must be forward biased with current and the shunt diode reverse biased with voltage. In the isolated arm, the shunt diode is forward biased with current and the series diode is reverse biased with voltage.

Driver Connections

Control Level (DC Currents and Voltages)				Condition of RF Output			
B2	**B3**	**B4**	**B5**	**J1-J2**	**J1-J3**	**J1-J4**	**J1-J5**
-15 V at -20 mA[6]	+6 V at +20 mA	+6 V at +20 mA	+6 V at +20 mA	Low Loss	Isolation	Isolation	Isolation
+6 V at +20 mA	-15 V at -20 mA[6]	+6 V at +20 mA	+6 V at +20 mA	Isolation	Low Loss	Isolation	Isolation
+6 V at +20 mA	+6 V at +20 mA	-15 V at -20 mA[6]	+6 V at +20 mA	Isolation	Isolation	Low Loss	Isolation
+6 V at +20 mA	+6 V at +20 mA	+6 V at +20 mA	-15 V at -20 mA[6]	Isolation	Isolation	Isolation	Low Loss

6. The voltage applied to the off arm is allowed to vary provided a constant current is applied through the shunt diode on the off arm.

Application Circuit[7,8,9,10,11]

Example:

J1 to J2→ Low Loss
R1 = 250 Ω
R2 = 450 Ω
B2 = -15 V
B3, B4, B5 = 6 V

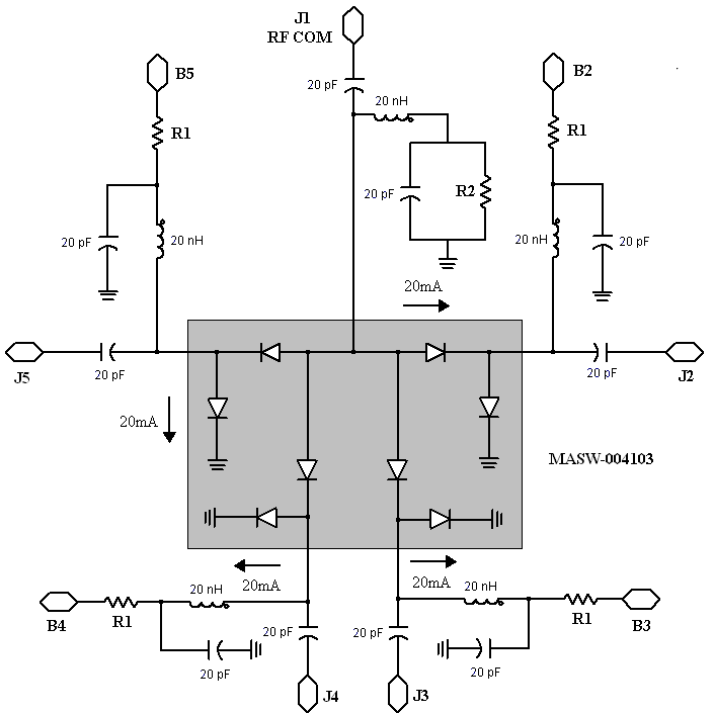

7. Assume V_F ~ 1 V @ 20 mA
8. R1 = 5 V / 0.02 A = 250 Ω; R2 = 9 V / 0.02 A = 450 Ω
9. P_{R1} = 0.02 A x 0.02 A x 250 = 0.1 W
10. P_{R2} = 0.02 A x 0.02 A x 450 = 0.18 W
11. Inductors shown in the above schematic are RF bias chokes. The operating bandwidth of a broad-band PIN diode switch is often dependent on the bias components, particularly the RF bias chokes. It is suggested that the response at the frequencies of interest be measured with all the bias components in place prior to installing of MASW-004103-1365.

MACOM Technology Solutions Inc. (MACOM) and its affiliates reserve the right to make changes to the product(s) or information contained herein without notice.
Visit www.macom.com for additional data sheets and product information.

Outline Drawing and Footprint (All dimensions in µm)[12,13,14,15]

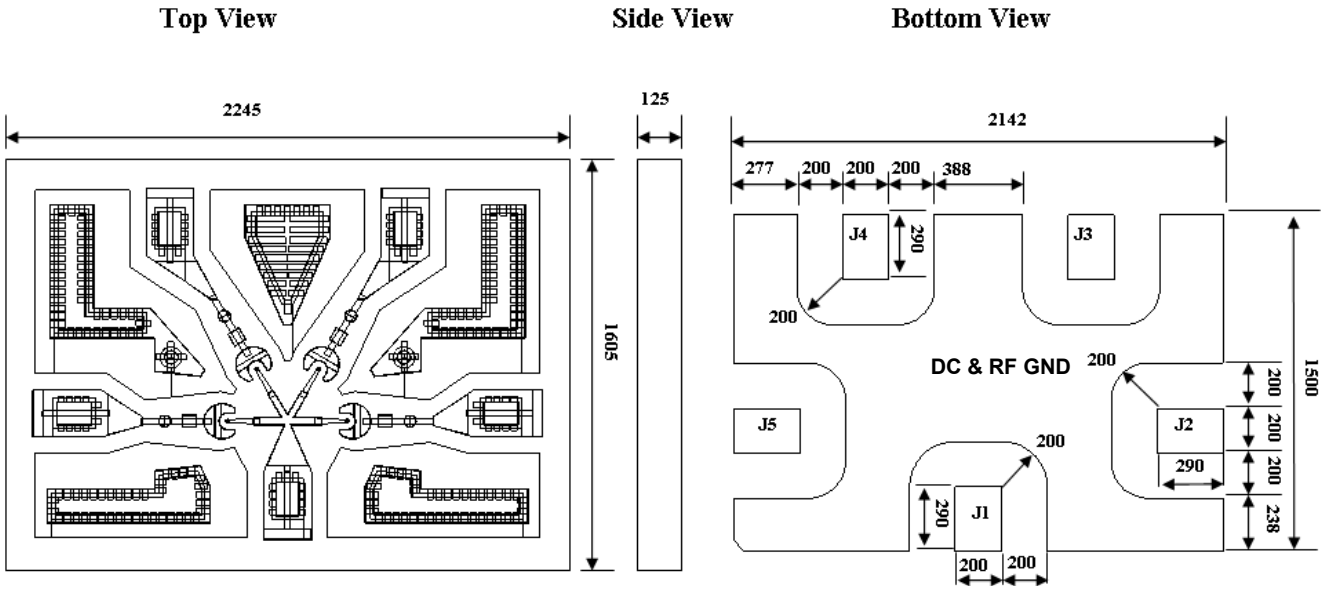

12. Bottom view shows the back metal foot print and mounting pads.
13. All dimension are +/-0.5 µm.
14. Ground radius is 200 µm and centered on the I/O Pad.
15. The center pad shown on the chip bottom view must be connected to RF and DC ground.

Dimensions

DIM	Inches		mm	
	Min.	Max.	Min.	Max.
Width	0.06220	0.06417	1.580	1.630
Length	0.08740	0.08937	2.220	2.270
Thickness	0.00394	0.00591	0.100	0.150

MACOM Technology Solutions Inc. (MACOM) and its affiliates reserve the right to make changes to the product(s) or information contained herein without notice.
Visit www.macom.com for additional data sheets and product information.

Sample Board

Samples test boards are available upon request.

Handling Procedures

Attachment to a circuit board is made simple through the use of standard surface mount technology. Mounting pads are conveniently located on the bottom of the chip and are removed from the active junction locations making it well suited for solder attachment. Connections may be made onto hard or soft substrates via the use of 80Au/20Sn, or RoHS compliant solders. Typical re-flow profiles for provided in Application Note M538 , “Surface Mounting Instructions“ and can viewed @ www.macom.com.

For applications where the average power is ≤1 W, a thermally conductive silver epoxy may also be used. Cure per manufacturers recommended time and temperature. Typically 1 hour at 150°C.

When soldering these devices to a hard substrate, a solder re-flow method is preferred. A vacuum pick up tool with a soft tip is recommended while placing the chip . When soldering to soft substrates, such as Duroid, a soft solder is recommended at the circuit board to chip mounting pad interface to minimize stress due to any TCE mismatches that may exist. Position the die so that its mounting pads are aligned with the circuit board land pads. Solder reflow should not be performed by causing heat to flow through the top surface of the die to the back. Since the HMIC glass is transparent, the edges of the mounting pads can be visually inspected through the die after attachment is completed.

PCB Land Pattern (All dimensions in µm)

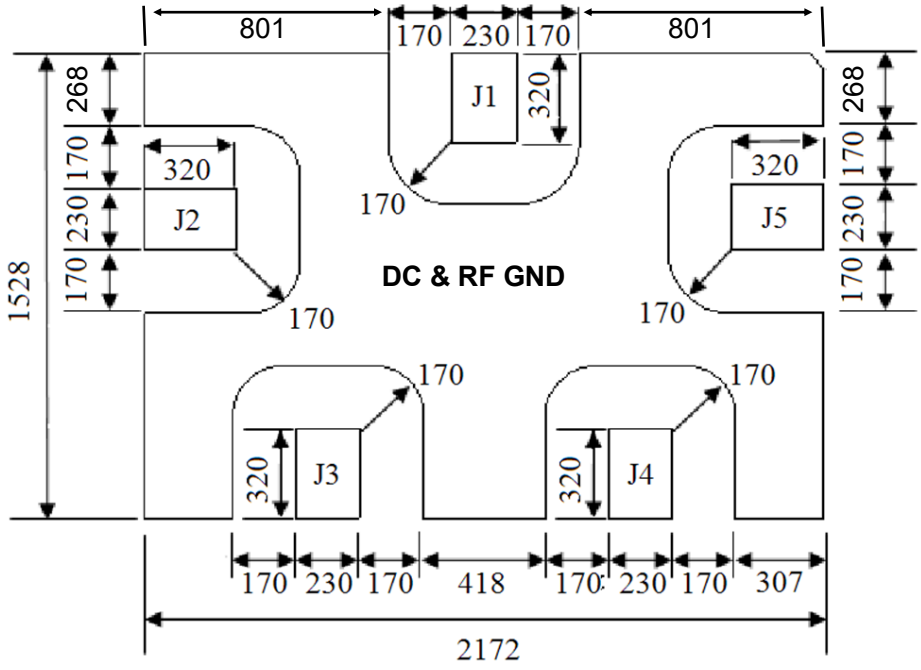

MACOM Technology Solutions Inc. (MACOM) and its affiliates reserve the right to make changes to the product(s) or information contained herein without notice.
Visit www.macom.com for additional data sheets and product information.

Carrier Tape Dimensions

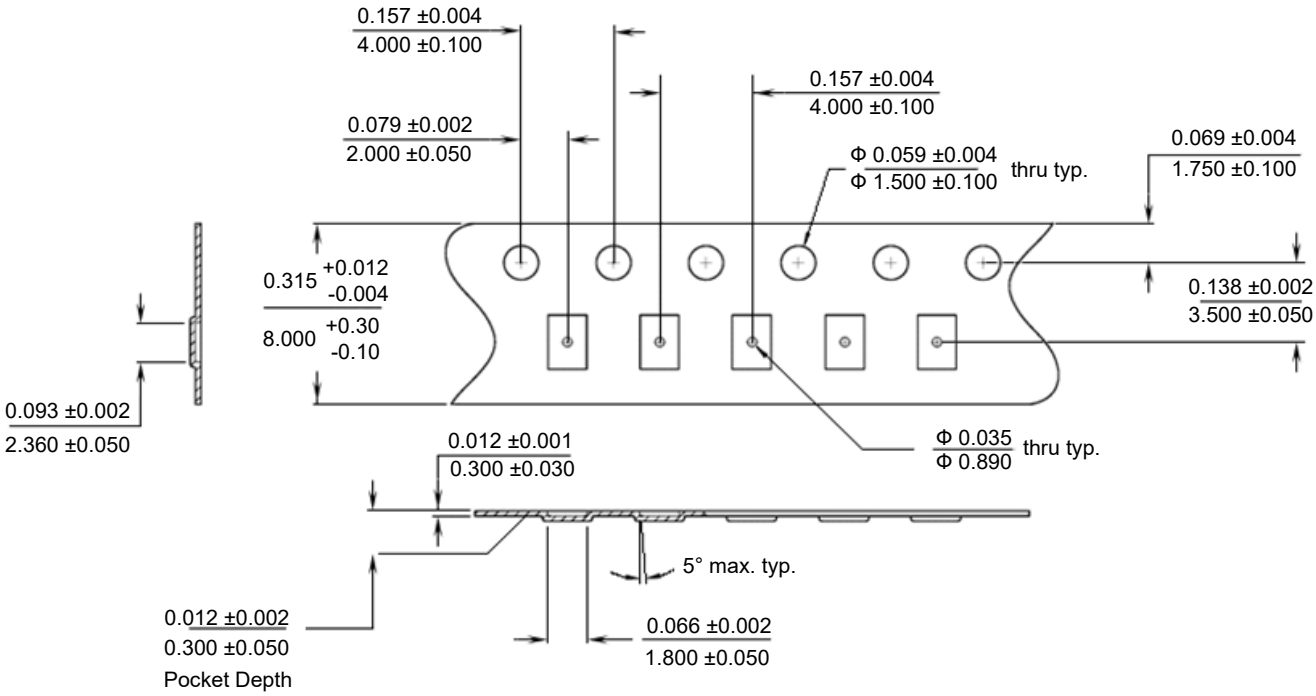

Chip Orientation in Tape

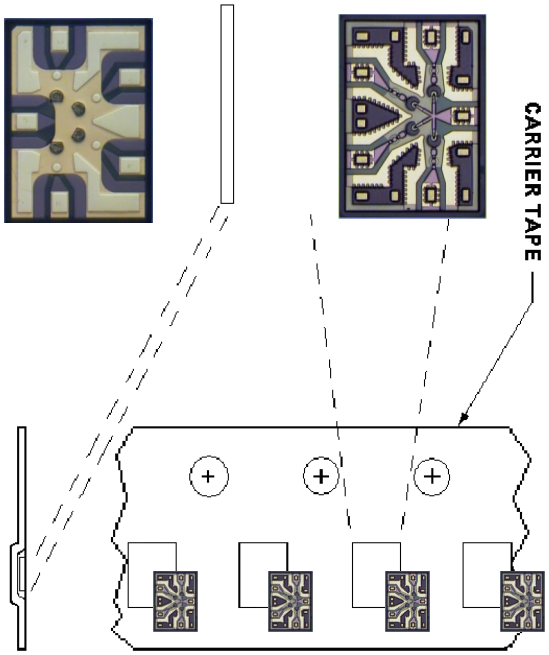

MACOM Technology Solutions Inc. (MACOM) and its affiliates reserve the right to make changes to the product(s) or information contained herein without notice.
Visit www.macom.com for additional data sheets and product information.

Reel Information

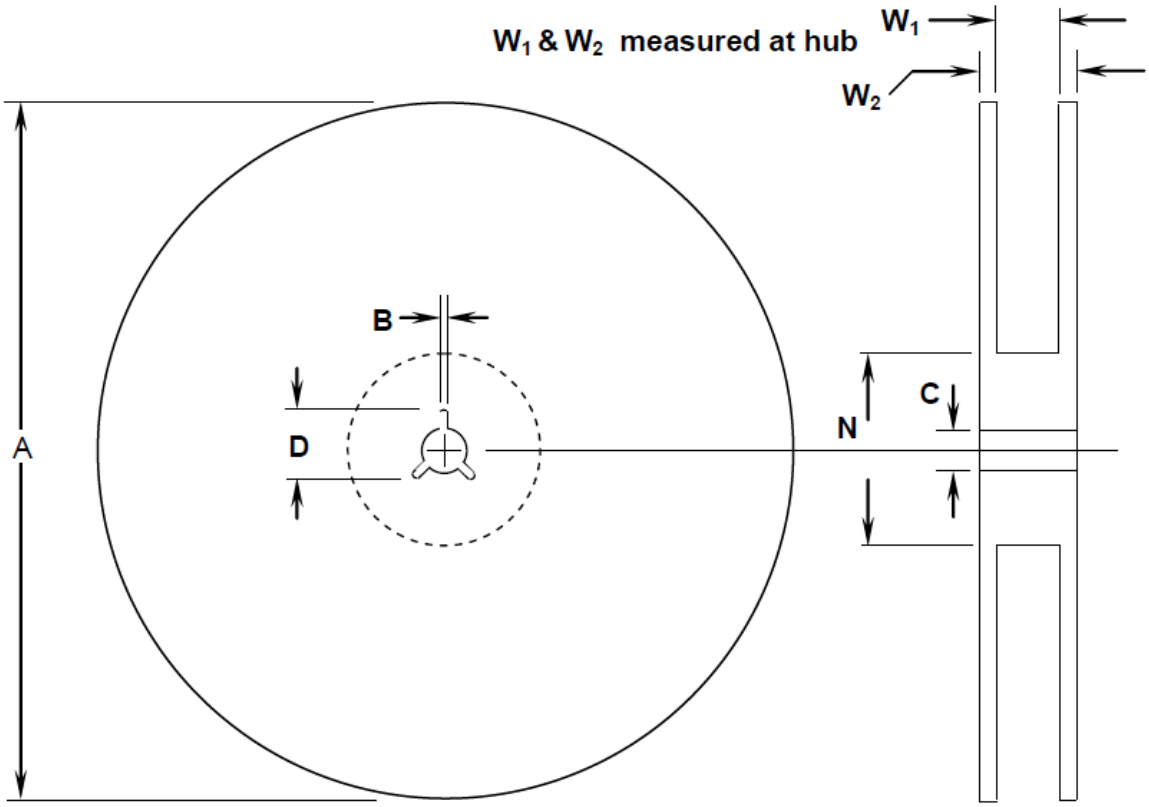

Dim.	inches		mm	
	Min.	Max.	Min.	Max.
A	6.980	7.019	177.3	178.3
B	0.059	0.098	1.5	2.5
C	0.504	0.520	12.8	13.2
D	0.795	0.815	20.2	20.7
N	2.146	2.185	54.5	55.5
W_1	0.331	0.337	8.4	8.55
W_2	—-	0.567	—-	14.4

MACOM Technology Solutions Inc. (MACOM) and its affiliates reserve the right to make changes to the product(s) or information contained herein without notice.
Visit www.macom.com for additional data sheets and product information.

MACOM Technology Solutions Inc. All rights reserved.

Information in this document is provided in connection with MACOM Technology Solutions Inc ("MACOM") products. These materials are provided by MACOM as a service to its customers and may be used for informational purposes only. Except as provided in MACOM's Terms and Conditions of Sale for such products or in any separate agreement related to this document, MACOM assumes no liability whatsoever. MACOM assumes no responsibility for errors or omissions in these materials. MACOM may make changes to specifications and product descriptions at any time, without notice. MACOM makes no commitment to update the information and shall have no responsibility whatsoever for conflicts or incompatibilities arising from future changes to its specifications and product descriptions. No license, express or implied, by estoppels or otherwise, to any intellectual property rights is granted by this document.

THESE MATERIALS ARE PROVIDED "AS IS" WITHOUT WARRANTY OF ANY KIND, EITHER EXPRESS OR IMPLIED, RELATING TO SALE AND/OR USE OF MACOM PRODUCTS INCLUDING LIABILITY OR WARRANTIES RELATING TO FITNESS FOR A PARTICULAR PURPOSE, CONSEQUENTIAL OR INCIDENTAL DAMAGES, MERCHANTABILITY, OR INFRINGEMENT OF ANY PATENT, COPYRIGHT OR OTHER INTELLECTUAL PROPERTY RIGHT. MACOM FURTHER DOES NOT WARRANT THE ACCURACY OR COMPLETENESS OF THE INFORMATION, TEXT, GRAPHICS OR OTHER ITEMS CONTAINED WITHIN THESE MATERIALS. MACOM SHALL NOT BE LIABLE FOR ANY SPECIAL, INDIRECT, INCIDENTAL, OR CONSEQUENTIAL DAMAGES, INCLUDING WITHOUT LIMITATION, LOST REVENUES OR LOST PROFITS, WHICH MAY RESULT FROM THE USE OF THESE MATERIALS.

MACOM products are not intended for use in medical, lifesaving or life sustaining applications. MACOM customers using or selling MACOM products for use in such applications do so at their own risk and agree to fully indemnify MACOM for any damages resulting from such improper use or sale.

MACOM Technology Solutions Inc. (MACOM) and its affiliates reserve the right to make changes to the product(s) or information contained herein without notice.
Visit www.macom.com for additional data sheets and product information.