MASW-011040

Switch, SP4T 200 W
0.05 - 1.0 GHz

Rev. V1

Features

- 200 W CW Incident Power @ +85°C
- Low Insertion Loss: <0.5 dB
- High Isolation: >40 dB
- Harmonics: <-70 dBc
- Operates from +V DC Bias Only
- Lead-Free 9 mm HQFN 20-lead Package
- Halogen-Free "Green" Mold Compound
- RoHS* Compliant and 260°C Reflow Compatible

Description

The MASW-011040 is a high power PIN diode SP4T switch in a common anode configuration, operating from 50 MHz to 1 GHz. It features low insertion loss and excellent linearity. It includes two high-power ports capable of handling up to 200 Watts CW and two low-power ports capable of handling up to 100 Watts CW of incident power at a base plate temperature of +85ºC.

This high power switch is ideal for use on land mobile radio and MIL-COM applications that require higher CW and pulsed power operation. This device can operate with positive-only DC supplies, making it suitable for switch-filter and power amplifier control circuits.

The MASW-011040 is manufactured using MACOM's hybrid manufacturing process featuring high voltage PIN diodes and passive devices integrated in a 9 mm HQFN 20-lead plastic package.

The MASW-011040 is compatible with MACOM's MADR-010574 PIN Diode Driver.

Ordering Information[1]

Part Number	Package
MASW-011040-TR0500	500 pc reel
MASW-011040-001SMB	Sample Test Board

1. Reference Application Note M513 for reel size information.

*Restrictions on Hazardous Substances, European Union Directive 2011/65/EU.

Functional Schematic

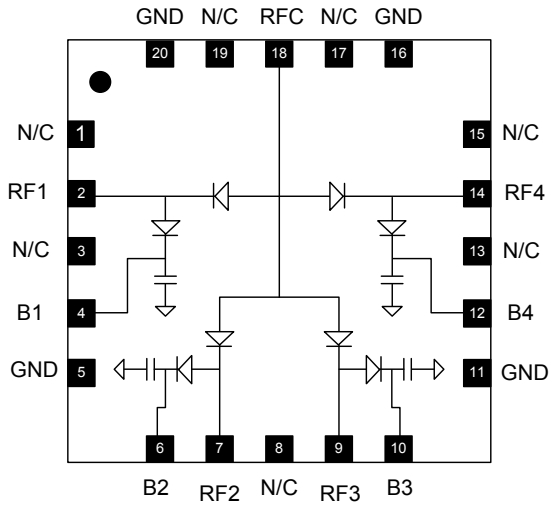

Pin Configuration

Pin	Function	Pin	Function
1	No Connection	11	Ground
2[2]	RF1 Input / V1 Bias	12	B4 Bias
3	No Connection	13	No Connection
4	B1 Bias	14[2]	RF4 Input / V4 Bias
5	Ground	15	No Connection
6	B2 Bias	16	Ground
7[2]	RF2 Input / V2 Bias	17	No Connection
8	No Connection	18	RF Common / V5 Bias
9[2]	RF3 Input / V3 Bias	19	No Connection
10	B3 Bias	20	Ground
		Paddle[3]	Ground

2. RF1 and RF4 are high power ports (200 W); RF2 and RF3 are low power ports (100 W).
3. The exposed paddle centered on the package bottom must be connected to RF, DC and thermal ground.

M/A-COM Technology Solutions Inc. (MACOM) and its affiliates reserve the right to make changes to the product(s) or information contained herein without notice.
Visit www.macom.com for additional data sheets and product information.

For further information and support please visit:
https://www.macom.com/support

Electrical Specifications: T_A = 25°C, P_{IN} = 0 dBm (unless otherwise defined), Z_0 = 50 Ω
Bias[4] = 5 V / 400 mA, 3 V / 200 mA, 100 V / 25 mA

Parameter	Test Conditions	Units	Min.	Typ.	Max.
Insertion Loss RFC - RF1 & RFC - RF4	0.5 GHz 1.0 GHz	dB	—	0.30 0.45	— 0.60
Insertion Loss RFC - RF2 & RFC - RF3	0.5 GHz 1.0 GHz	dB	—	0.25 0.40	— 0.55
Isolation RFC - RF1 & RFC - RF4	0.5 GHz 1.0 GHz	dB	— 40	51 45	—
Isolation RFC - RF2 & RFC - RF3	0.5 GHz 1.0 GHz	dB	—	51 45	—
Input Return Loss RFC - RF1 & RFC - RF4	P_{IN} = 0 dBm	dB	—	>13	—
Input Return Loss RFC - RF2 & RFC - RF3	P_{IN} = 0 dBm	dB	—	>20	—
CW Input Power RFC - RF1 & RFC - RF4	85°C base plate, 550 MHz 950 MHz	dBm / W	—	53 / 200 52 / 158	—
CW Input Power RFC - RF2 & RFC - RF3	85°C base plate, 550 MHz 950 MHz	dBm / W	—	50 / 100 49 / 80	—
P0.1dB RFC - RF1 & RFC - RF4	85°C base plate, 550 MHz 950 MHz	dBm	—	54 53	—
P0.1dB RFC - RF2 & RFC - RF3	85°C base plate, 550 MHz 950 MHz	dBm	—	51 50	—
2nd Harmonics	P_{IN} = 49 dBm, F = 950 MHz	dBc	—	-75	—
3rd Harmonics	P_{IN} = 49 dBm, F = 950 MHz	dBc	—	-85	—
T_{ON}, T_{OFF}	(50% CTL - 90% RF and 10% RF) 1 MHz Rep Rate in Modulating Mode	µs	—	3.5	—
T_{RISE}, T_{FALL}	(10-90% RF Voltage) 1 MHz Rep Rate in Modulating Mode	µs	—	0.8	—

4. See Bias table.

M/A-COM Technology Solutions Inc. (MACOM) and its affiliates reserve the right to make changes to the product(s) or information contained herein without notice.
Visit www.macom.com for additional data sheets and product information.

For further information and support please visit:
https://www.macom.com/support

Bias Table[5]

RF State	V1 Bias (V)	V2 Bias (V)	V3 Bias (V)	V4 Bias (V)	V5 Bias (V)	B1 Bias (V)	B2 Bias (V)	B3 Bias (V)	B4 Bias (V)
RFC - RF1 Low Loss RFC - RF2 Isolation RFC - RF3 Isolation RFC - RF4 Isolation	0 V @ 400 mA	100 V @ 25 mA	100 V @ 25 mA	100 V @ 25 mA	5 V @ 400 mA	100 V @ 0 mA	0 V @ 25 mA	0 V @ 25 mA	0 V @ 25 mA
RFC - RF2 Low Loss RFC - RF1 Isolation RFC - RF3 Isolation RFC - RF4 Isolation	100 V @ 25 mA	0 V @ 200 mA	100 V @ 25 mA	100 V @ 25 mA	3 V @ 200 mA	0 V @ 25 mA	100 V @ 0 mA	0 V @ 25 mA	0 V @ 25 mA
RFC - RF3 Low Loss RFC - RF1 Isolation RFC - RF2 Isolation RFC - RF4 Isolation	100 V @ 25 mA	100 V @ 25 mA	0 V @ 200 mA	100 V @ 25 mA	3 V @ 200 mA	0 V @ 25 mA	0 V @ 25 mA	100 V @ 0 mA	0 V @ 25 mA
RFC - RF4 Low Loss RFC - RF1 Isolation RFC - RF2 Isolation RFC - RF3 Isolation	100 V @ 25 mA	100 V @ 25 mA	100 V @ 25 mA	0 V @ 400 mA	5 V @ 400 mA	0 V @ 25 mA	0 V @ 25 mA	0 V @ 25 mA	100 V @ 0 mA

5. DC reverse bias of a PIN diode operating at a high power is dependent on RF frequency, incident power, and VSWR. See Minimum Reverse DC Voltage table for high power operation.

Absolute Maximum Ratings[6,7]

Parameter	Absolute Maximum
Forward Current	+400 mA
Reverse DC Voltage	| -150 V |
Operating Temperature	-55°C to +85°C
Storage Temperature	-65°C to +150°C
Junction Temperature	+175°C

6. Exceeding any one or combination of these limits may cause permanent damage to this device.
7. MACOM does not recommend sustained operation near these survivability limits.

Minimum Reverse DC Voltage[8]

Frequency (MHz)	Minimum Reverse DC Voltage
50	| -142 V |
100	| -102 V |
200	| -60 V |
500	| -26 V |
1000	| -13 V |

8. Required to maintain low loss under 200 W of incident power with 1.5:1 VSWR.

M/A-COM Technology Solutions Inc. (MACOM) and its affiliates reserve the right to make changes to the product(s) or information contained herein without notice.
Visit www.macom.com for additional data sheets and product information.

For further information and support please visit:
https://www.macom.com/support

Typical Performance Curves:

Insertion Loss

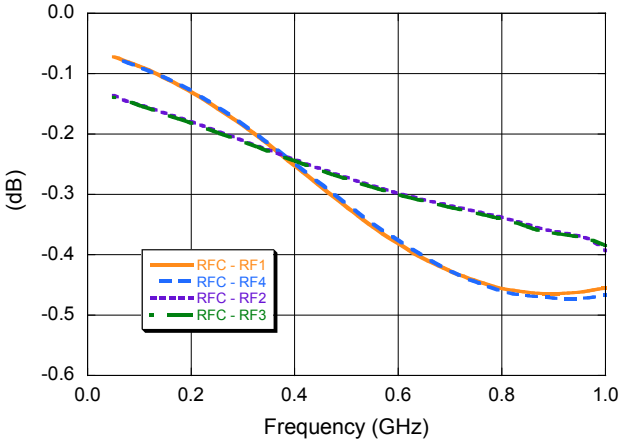

Return Loss

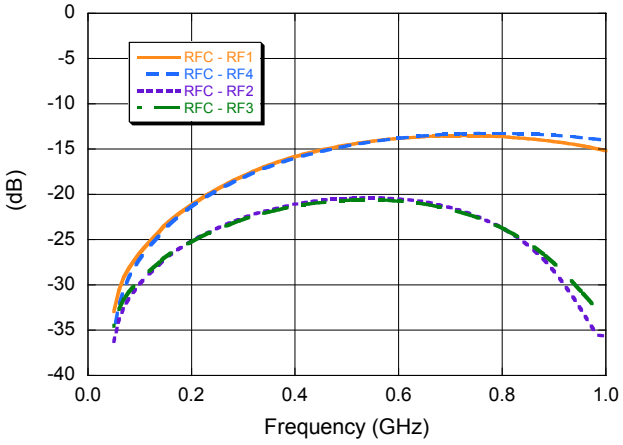

Isolation RFC - RF1

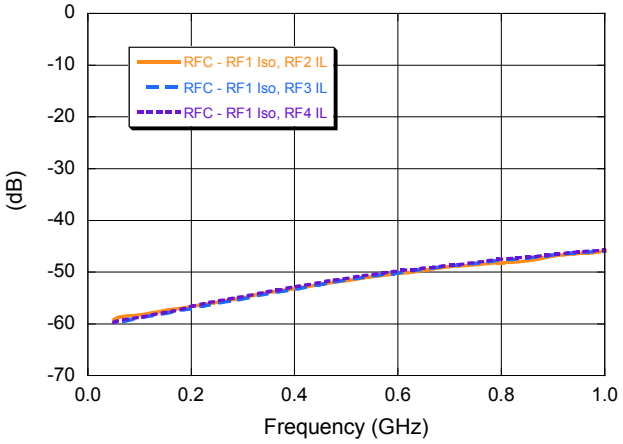

Isolation RFC - RF2

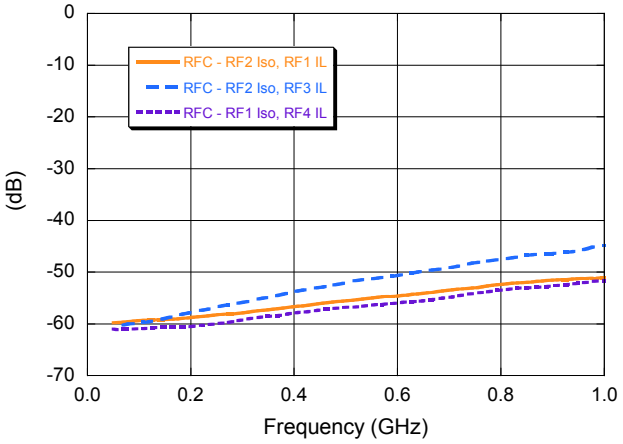

Isolation RFC - RF3

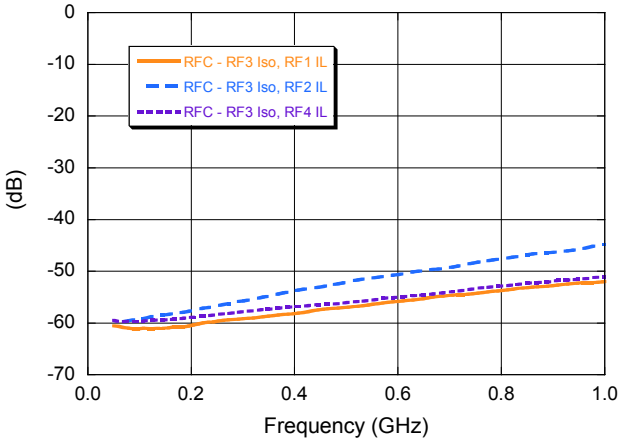

Isolation RFC - RF4

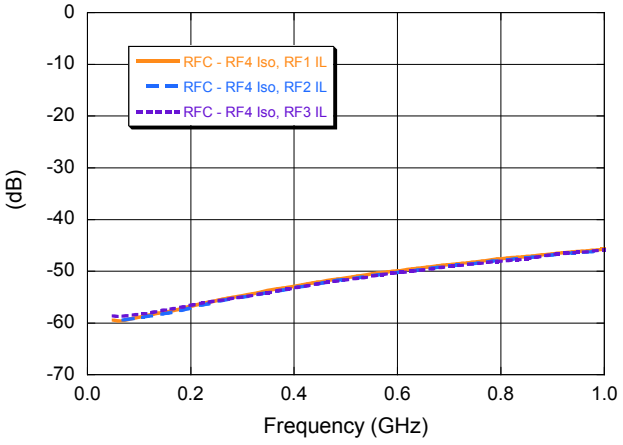

M/A-COM Technology Solutions Inc. (MACOM) and its affiliates reserve the right to make changes to the product(s) or information contained herein without notice.
Visit www.macom.com for additional data sheets and product information.

For further information and support please visit:
https://www.macom.com/support

Application Schematic

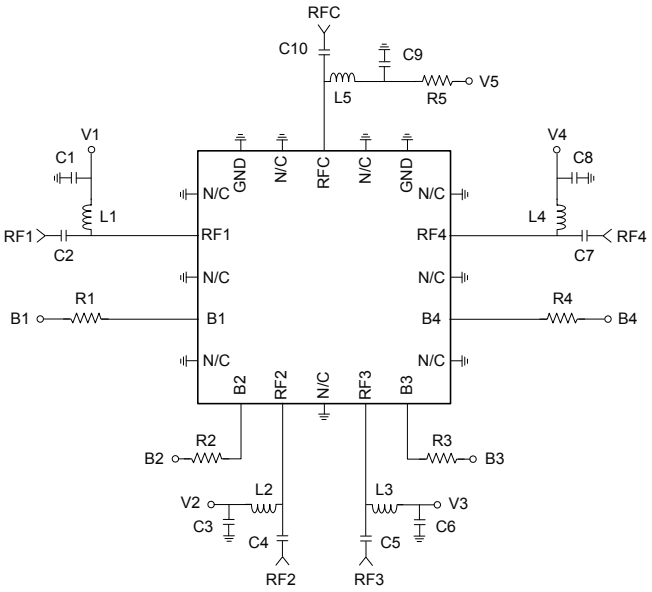

Off-Chip Component Values

Component	Value
C1,C3,C6,C8,C9	1000 pF
C2,C4,C5,C7,C10	270 pF
L1 - L5	680 nH
R1 - R4	4.4 kΩ
R5[9]	10 Ω

9. Must be rated for appropriate power handling.

Handling Procedures

Please observe the following precautions to avoid damage:

Static Sensitivity

These electronic devices are sensitive to electrostatic discharge (ESD) and can be damaged by static electricity. Proper ESD control techniques should be used when handling these Class 1B HBM devices.

Lead Free 9 mm HQFN 20-Lead†

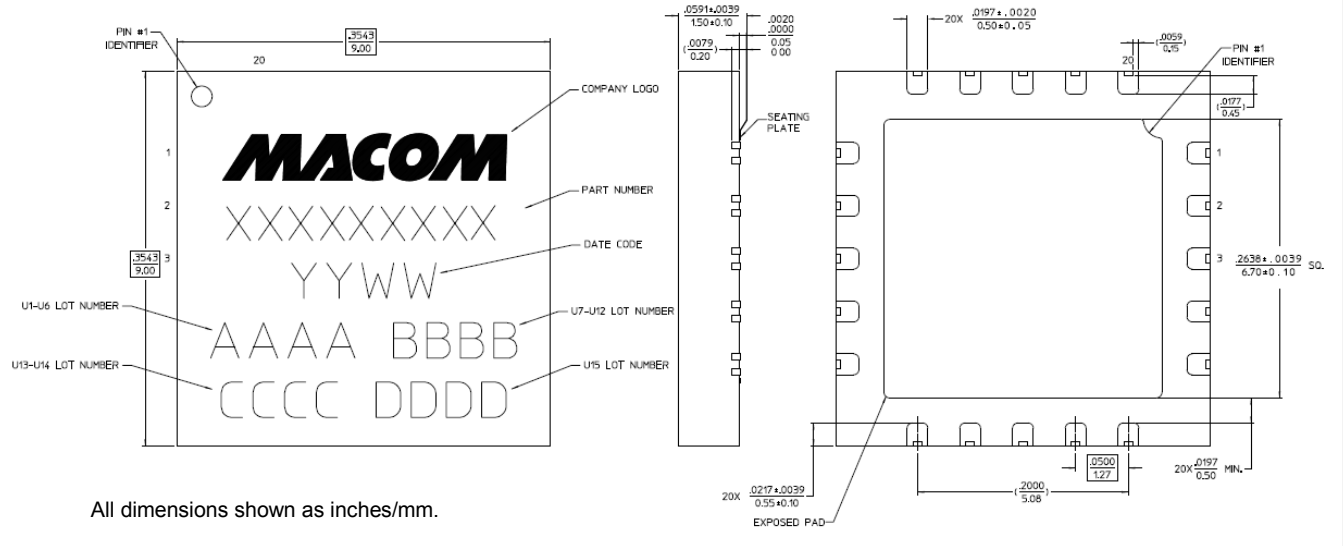

All dimensions shown as inches/mm.

† Reference Application Note S2083 for lead-free solder reflow recommendations.
Meets JEDEC moisture sensitivity level 3 requirements.
Plating is NiPdAuAg.

M/A-COM Technology Solutions Inc. (MACOM) and its affiliates reserve the right to make changes to the product(s) or information contained herein without notice.
Visit www.macom.com for additional data sheets and product information.

For further information and support please visit:
https://www.macom.com/support