MASWSS0148

GaAs SPST High Isolation Terminated Switch
0.3 - 4.0 GHz

Rev. V1

Features

- High Isolation: 55 dB @ 2 GHz
- Insertion Loss: 1.6 dB @ 2 GHz
- Terminated RF Input in Isolation State
- Single Positive Control
- CMOS Compatible Logic
- Lead-Free 3 mm 12-Lead PQFN Package
- 100% Matte Tin Plating over Copper
- Halogen-Free "Green" Mold Compound
- RoHS* Compliant and 260°C Reflow Compatible

Description

M/A-COM's MASWSS0148 is a GaAs monolithic single pole single throw (SPST) terminated switch in a lead-free 3 mm 12-lead PQFN plastic package. The MASWSS0148 is ideally suited for use where low power consumption, small size and high isolation are required.

Typical applications include PCS and GSM LO switching, switch matrices and switched filter banks in systems such as radio and cellular equipment.

The MASWSS0148 is fabricated using a mature 1-micron gate length GaAs MESFET process. The process features full chip passivation for increased performance and reliability.

Ordering Information[1]

Part Number	Package
MASWSS0148TR-3000	3000 piece reel
MASWSS0148SMB	Sample Test Board

1. Reference Application Note M513 for reel size information.

Schematic with Off-Chip Components [2]

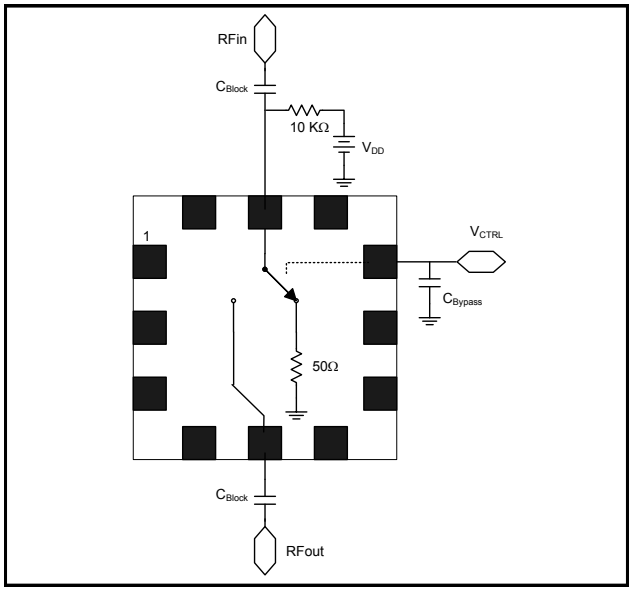

2. VDD can be injected at either pin 5 or pin 11.

Pin Configuration

Pin No.	Function	Pin No.	Function
1	No Connection	7	No Connection
2	No Connection	8	No Connection
3	No Connection	9	V_{CTRL}
4	No Connection	10	No Connection
5	RF Output	11	RF Input
6	No Connection	12	No Connection
		13	Paddle[3]

3. The exposed pad centered on the package bottom must be connected to RF and DC ground.

Absolute Maximum Ratings [4,5]

Parameter	Absolute Maximum
Input Power	23 dBm (V_{DD} = V_{CTRL} = 5 V)
Operating Voltage (V_{DD}, V_{CTRL})	8.5 V
Operating Temperature	-40°C to +85°C
Storage Temperature	-65°C to +125°C

4. Exceeding any one or combination of these limits may cause permanent damage to this device.
5. M/A-COM does not recommend sustained operation near these survivability limits.

* Restrictions on Hazardous Substances, European Union Directive 2002/95/EC.

M/A-COM Technology Solutions Inc. (MACOM) and its affiliates reserve the right to make changes to the product(s) or information contained herein without notice.
Visit www.macom.com for additional data sheets and product information.

For further information and support please visit:
https://www.macom.com/support

GaAs SPST High Isolation Terminated Switch
0.3 - 4.0 GHz

Rev. V1

Electrical Specifications: T_A = 25°C, V_{DD} = 5 V, V_{CTRL} = 0 / 5 V, 100 pF capacitors, Z_0 = 50 Ω [6]

Parameter	Test Conditions	Units	Min.	Typ.	Max.
Insertion Loss[7]	0.3 - 1.0 GHz 1.0 - 2.0 GHz 2.0 - 3.0 GHz 3.0 - 4.0 GHz	dB dB dB dB	— — — —	1.5 1.6 1.7 1.75	1.7 — — —
Isolation	1.0 GHz 2.0 GHz 3.0 GHz 4.0 GHz	dB dB dB dB	50 — — —	55 55 48 40	— — — —
Return Loss	Insertion Loss State, 0.3 - 4.0 GHz	dB	—	17	—
Input Return Loss	Isolation State	dB	—	20	—
Input 1 dB Compression	—	dBm	—	27	—
Trise, Tfall	10% to 90% RF 90% to 10% RF	µS µS	— —	3 0.3	— —
Ton, Toff	50% Control to 90% RF 50% Control to 10% RF	µS µS	— —	3.5 0.4	— —
Transients	In-Band	mV	—	20	—
Input IP_2	2-Tone, 5 MHz spacing, +10 dBm / tone	dBm	—	72	—
Input IP_3	2-Tone, 5 MHz spacing, +10 dBm / tone	dBm	—	49	—
Current (I_{CTRL})	Input Power = 10 dBm	µA	—	1	6
Current (I_{DD})	Input Power = 10 dBm	µA	—	1	6

6. For positive voltage control, external DC blocking capacitors are required on all RF ports.
7. Insertion loss can be optimized by varying the DC blocking capacitor value, e.g. 1000 pF for 300 MHz - 1 GHz, 39 pF for 0.5 GHz - 4 GHz.

Truth Table [8,9]

V_{CTRL}	RFin	RFout
0	50 Ω Termination	Open
1	RFout	RFin

8. Differential voltage, V(state 1) - V(state 0), must be +2.5 V minimum and must not exceed 8.5 V.
9. 0 = 0 V ± 0.2 V, 1 = VDD = 2.5 V to 8.5 V

Handling Procedures

Please observe the following precautions to avoid damage:

Static Sensitivity

Gallium Arsenide Integrated Circuits are sensitive to electrostatic discharge (ESD) and can be damaged by static electricity. Proper ESD control techniques should be used when handling these devices.

M/A-COM Technology Solutions Inc. (MACOM) and its affiliates reserve the right to make changes to the product(s) or information contained herein without notice.
Visit www.macom.com for additional data sheets and product information.

For further information and support please visit:
https://www.macom.com/support

Typical Performance Curves (V_{DD} = 5 V, V_{CTRL} = 0 / 5 V, 100 pF capacitors)

Insertion Loss

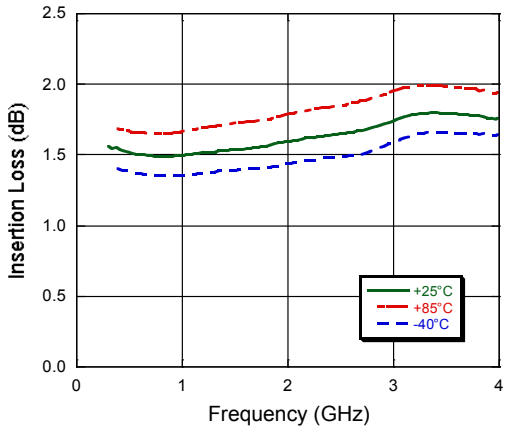

Isolation

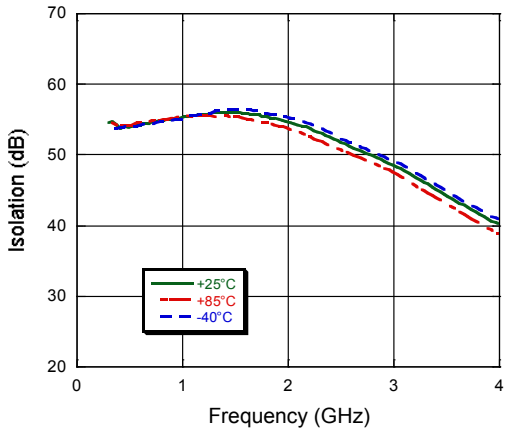

Return Loss (Insertion Loss State)

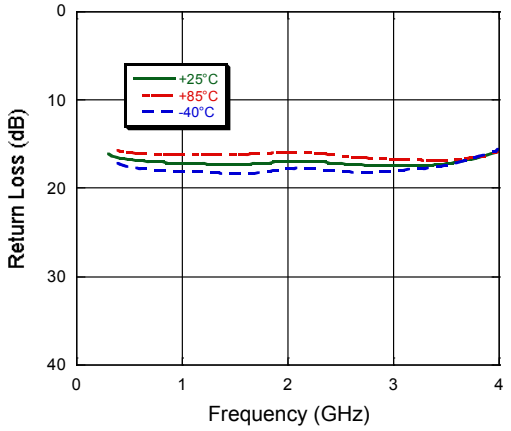

Input Return Loss (Isolation State)

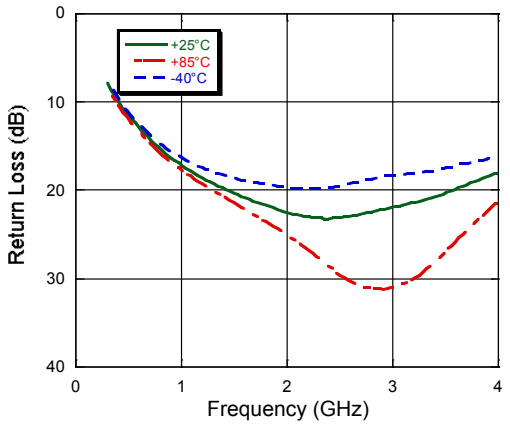

P1dB

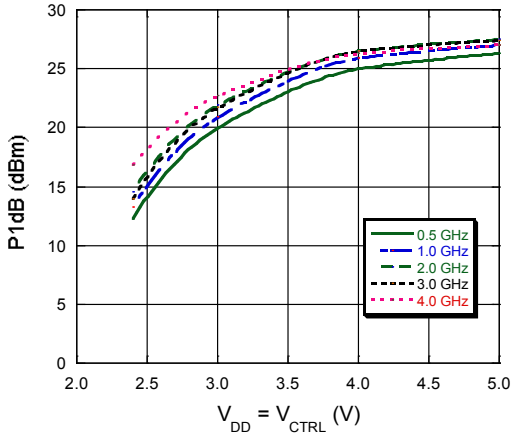

P0.1dB

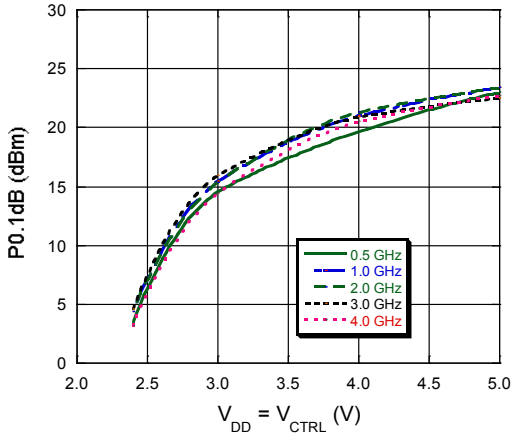

M/A-COM Technology Solutions Inc. (MACOM) and its affiliates reserve the right to make changes to the product(s) or information contained herein without notice.
Visit www.macom.com for additional data sheets and product information.

For further information and support please visit:
https://www.macom.com/support

Typical Performance Curves (V_{DD} = 5 V, V_{CTRL} = 0 / 5 V, 100 pF capacitors)

IP3

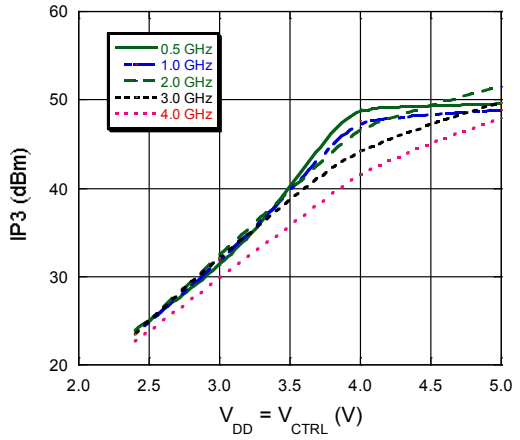

Lead-Free 3 mm 12-Lead PQFN†

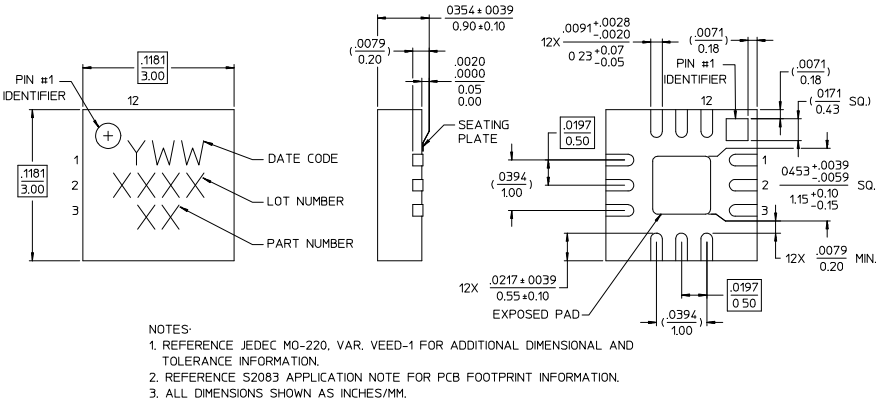

† Reference Application Note M538 for lead-free solder reflow recommendations.

M/A-COM Technology Solutions Inc. (MACOM) and its affiliates reserve the right to make changes to the product(s) or information contained herein without notice.
Visit www.macom.com for additional data sheets and product information.

For further information and support please visit:
https://www.macom.com/support

M/A-COM Technology Solutions Inc. All rights reserved.

Information in this document is provided in connection with M/A-COM Technology Solutions Inc ("MACOM") products. These materials are provided by MACOM as a service to its customers and may be used for informational purposes only. Except as provided in MACOM's Terms and Conditions of Sale for such products or in any separate agreement related to this document, MACOM assumes no liability whatsoever. MACOM assumes no responsibility for errors or omissions in these materials. MACOM may make changes to specifications and product descriptions at any time, without notice. MACOM makes no commitment to update the information and shall have no responsibility whatsoever for conflicts or incompatibilities arising from future changes to its specifications and product descriptions. No license, express or implied, by estoppels or otherwise, to any intellectual property rights is granted by this document.

THESE MATERIALS ARE PROVIDED "AS IS" WITHOUT WARRANTY OF ANY KIND, EITHER EXPRESS OR IMPLIED, RELATING TO SALE AND/OR USE OF MACOM PRODUCTS INCLUDING LIABILITY OR WARRANTIES RELATING TO FITNESS FOR A PARTICULAR PURPOSE, CONSEQUENTIAL OR INCIDENTAL DAMAGES, MERCHANTABILITY, OR INFRINGEMENT OF ANY PATENT, COPYRIGHT OR OTHER INTELLECTUAL PROPERTY RIGHT. MACOM FURTHER DOES NOT WARRANT THE ACCURACY OR COMPLETENESS OF THE INFORMATION, TEXT, GRAPHICS OR OTHER ITEMS CONTAINED WITHIN THESE MATERIALS. MACOM SHALL NOT BE LIABLE FOR ANY SPECIAL, INDIRECT, INCIDENTAL, OR CONSEQUENTIAL DAMAGES, INCLUDING WITHOUT LIMITATION, LOST REVENUES OR LOST PROFITS, WHICH MAY RESULT FROM THE USE OF THESE MATERIALS.

MACOM products are not intended for use in medical, lifesaving or life sustaining applications. MACOM customers using or selling MACOM products for use in such applications do so at their own risk and agree to fully indemnify MACOM for any damages resulting from such improper use or sale.

M/A-COM Technology Solutions Inc. (MACOM) and its affiliates reserve the right to make changes to the product(s) or information contained herein without notice.
Visit www.macom.com for additional data sheets and product information.

For further information and support please visit:
https://www.macom.com/support