MGS8xx / MGS9xx Series

GaAs Schottky Diodes

Rev. V1

Features

- 14 Different Configurations
- Beam Lead, Flip Chip, or Packaged Devices
- Hi-Rel Screening per MIL-PRF-19500 and MIL-PRF-38534 Available

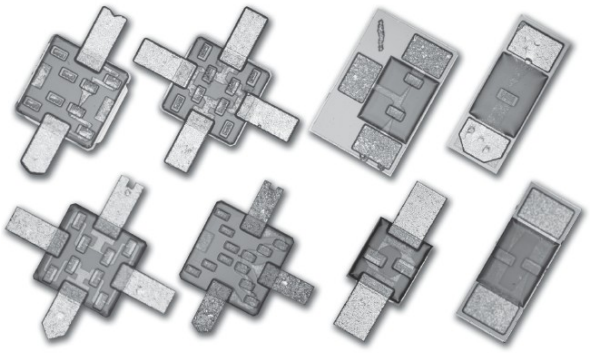

Description

The MGS series of GaAs Schottky diodes are designed for optimum performance in millimeter wave components operating to 60 GHz.

Beam Lead
Electrical Characteristics, T_A = +25°C

Model	Configuration	V_F mV		ΔV_F mV	V_{BR} V	C_J pF	ΔC_J pF	R_S	Outline
		Min.	Max.	Max.	Min.	Max.	Max.	Max.	
MGS901	Single Junction	650	750	—	5	0.06	—	7	GB110
MGS902	Anti-parallel Pair	650	750	20	5	0.10	—	7	GB210
MGS903	Series Tee	650	750	20	5	0.06	0.02	7	GB310
MGS904	4 Junction Ring-Quad	650	750	20	5	0.06	0.02	7	B85
MGS905	4 Junction Bridge-Quad	650	750	20	5	0.06	0.02	7	B86
MGS906	4 Junction Series-Tee	1300	1500	40	10	0.04	0.02	14	B91
MGS907	8 Junction Ring-Quad	1300	1500	40	10	0.04	0.02	14	B85
MGS907A	8 Junction Ring-Quad	1300	1500	40	10	0.06	0.02	12	B85
MGS907B	8 Junction Ring-Quad	1300	1500	40	10	0.08	0.02	10	B85
MGS908	8 Junction Quad	1300	1500	40	10	0.04	0.02	14	B86
MGS909	6 Junction Series-Tee	1800	2100	60	15	0.10	0.03	21	B90
MGS910	12 Junction Ring-Quad	1800	2100	60	15	0.10	0.03	21	B87
MGS911	12 Junction Bridge-Quad	1800	2100	60	15	0.10	0.03	21	B88
MGS912	Four Junction	2500	2900	—	20	0.03	—	28	B89
Test Conditions		I_F = 1 mA			I_R = 10 µA	V_R = 0 V, 1 MHz		I_F = 5 mA	

Flip Chip
Electrical Characteristics, T_A = +25°C

Model	Configuration	V_F mV		ΔV_F mV	V_{BR} V	C_J pF	ΔC_J pF	R_S	Outline
		Min.	Max.	Max.	Min.	Max.	Max.	Max.	
MGS801	Single Junction	650	750	—	5	0.05	—	7	GC110
MGS801A	Single Junction	650	750	—	5	0.075	—	5	GC110
MGS802	Anti-parallel Pair	650	750	20	5	0.10	—	7	GC210
MGS802A	Anti-parallel Pair	650	750	20	5	0.15	—	5	GC210
MGS803	Series Tee	650	750	20	5	0.06	0.02	7	GC310
Test Conditions		I_F = 1 mA			I_R = 10 µA	V_R = 0 V, 1 MHz		I_F = 5 mA	

M/A-COM Technology Solutions Inc. (MACOM) and its affiliates reserve the right to make changes to the product(s) or information contained herein without notice.
Visit www.macom.com for additional data sheets and product information.

For further information and support please visit:
https://www.macom.com/support

Absolute Maximum Ratings

Rating	Limits
Reverse Voltage	Rated Vbr
Forward Current	50 mA
DC Power Dissipation	75 mW per junction @ T_A = 25°C
Operating Temperature	-65°C to +150°
Storage Temperature	-65°C to +150°
Soldering Temperature (packaged)	+260°C for 5 seconds per JEDEC J-STD-20C
Minimum Beam Lead Pull Strength	6 grams

Outlines

GB110

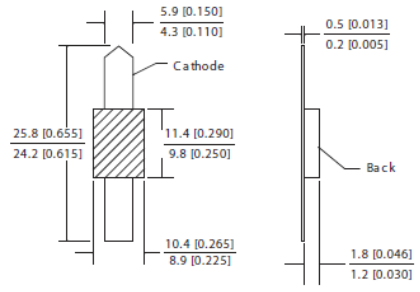

GB210

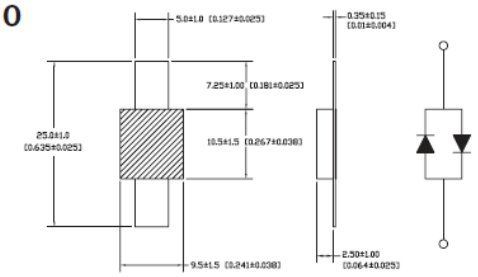

GB310

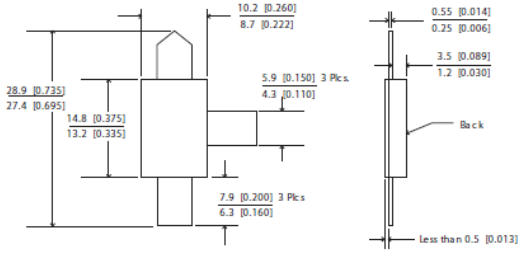

GC110

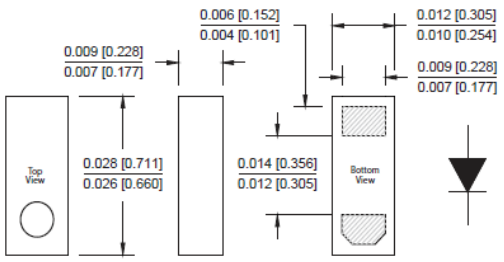

GC210

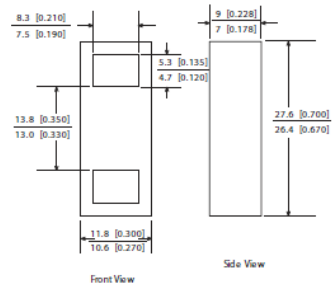

GC310

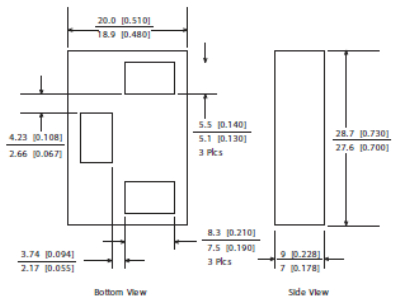

M/A-COM Technology Solutions Inc. (MACOM) and its affiliates reserve the right to make changes to the product(s) or information contained herein without notice.
Visit www.macom.com for additional data sheets and product information.

For further information and support please visit:
https://www.macom.com/support

Outlines

B85

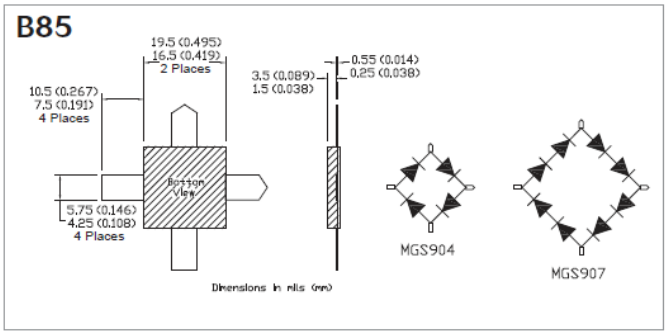

B86

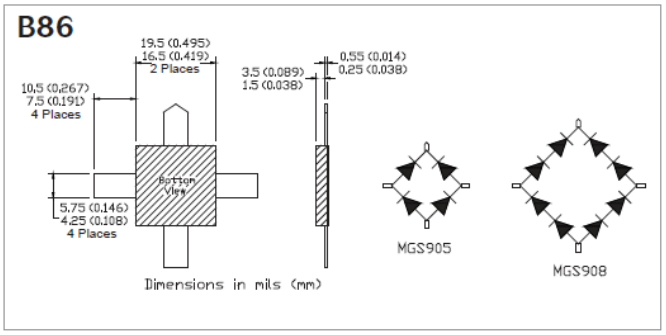

B87

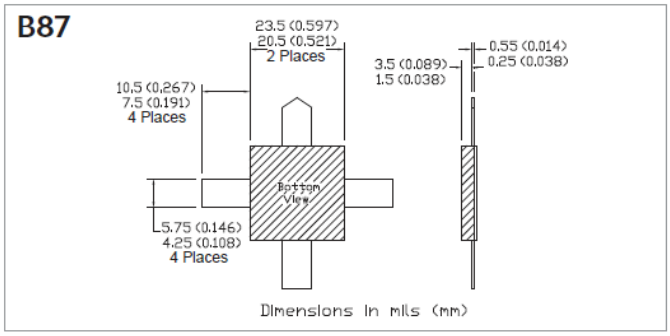

B88

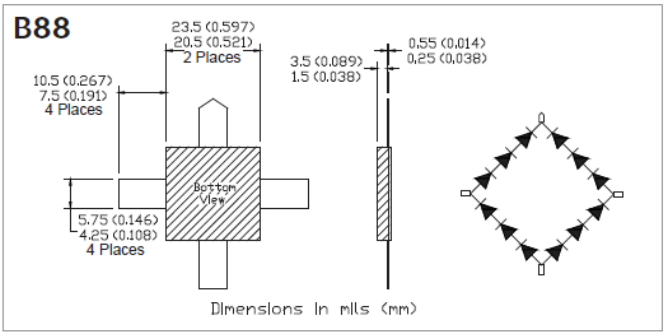

B89

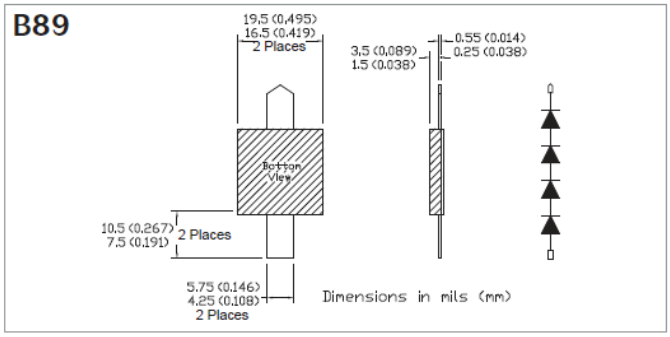

B90

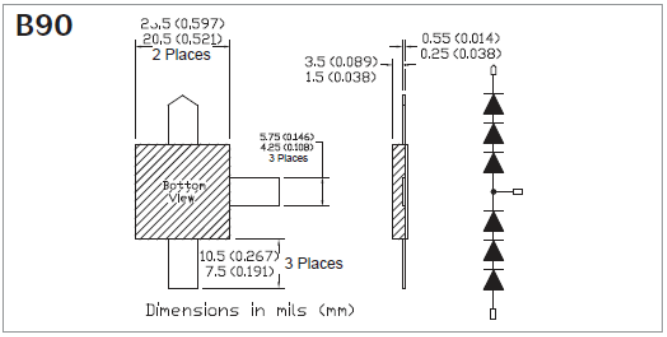

B91

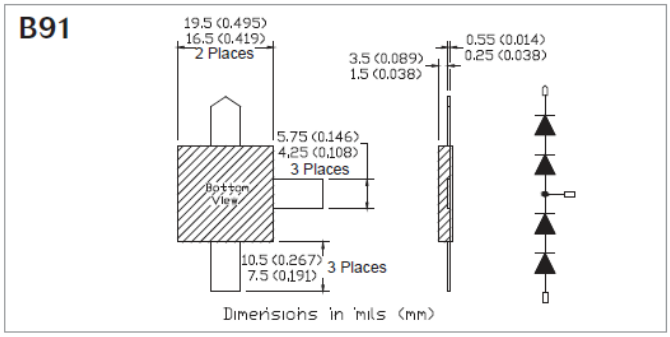

M/A-COM Technology Solutions Inc. (MACOM) and its affiliates reserve the right to make changes to the product(s) or information contained herein without notice.
Visit www.macom.com for additional data sheets and product information.

For further information and support please visit:
https://www.macom.com/support

M/A-COM Technology Solutions Inc. All rights reserved.

Information in this document is provided in connection with M/A-COM Technology Solutions Inc ("MACOM") products. These materials are provided by MACOM as a service to its customers and may be used for informational purposes only. Except as provided in MACOM's Terms and Conditions of Sale for such products or in any separate agreement related to this document, MACOM assumes no liability whatsoever. MACOM assumes no responsibility for errors or omissions in these materials. MACOM may make changes to specifications and product descriptions at any time, without notice. MACOM makes no commitment to update the information and shall have no responsibility whatsoever for conflicts or incompatibilities arising from future changes to its specifications and product descriptions. No license, express or implied, by estoppels or otherwise, to any intellectual property rights is granted by this document.

THESE MATERIALS ARE PROVIDED "AS IS" WITHOUT WARRANTY OF ANY KIND, EITHER EXPRESS OR IMPLIED, RELATING TO SALE AND/OR USE OF MACOM PRODUCTS INCLUDING LIABILITY OR WARRANTIES RELATING TO FITNESS FOR A PARTICULAR PURPOSE, CONSEQUENTIAL OR INCIDENTAL DAMAGES, MERCHANTABILITY, OR INFRINGEMENT OF ANY PATENT, COPYRIGHT OR OTHER INTELLECTUAL PROPERTY RIGHT. MACOM FURTHER DOES NOT WARRANT THE ACCURACY OR COMPLETENESS OF THE INFORMATION, TEXT, GRAPHICS OR OTHER ITEMS CONTAINED WITHIN THESE MATERIALS. MACOM SHALL NOT BE LIABLE FOR ANY SPECIAL, INDIRECT, INCIDENTAL, OR CONSEQUENTIAL DAMAGES, INCLUDING WITHOUT LIMITATION, LOST REVENUES OR LOST PROFITS, WHICH MAY RESULT FROM THE USE OF THESE MATERIALS.

MACOM products are not intended for use in medical, lifesaving or life sustaining applications. MACOM customers using or selling MACOM products for use in such applications do so at their own risk and agree to fully indemnify MACOM for any damages resulting from such improper use or sale.