Silicon Step Recovery Diodes

MMDx & SMMDx Series
Rev. V4

Features

- Output Combs to 40+ GHz
- Transition Times down to 35 ps
- Screening per MIL-PRF-19500 and MIL-PRF-38534 available

Description

The diodes feature fully passivated, true mesa construction for sharp transitions and improved stability. The beam lead SRDs have the industry's fastest transition times for millimeter wave multiplication and picoseconds pulse forming.

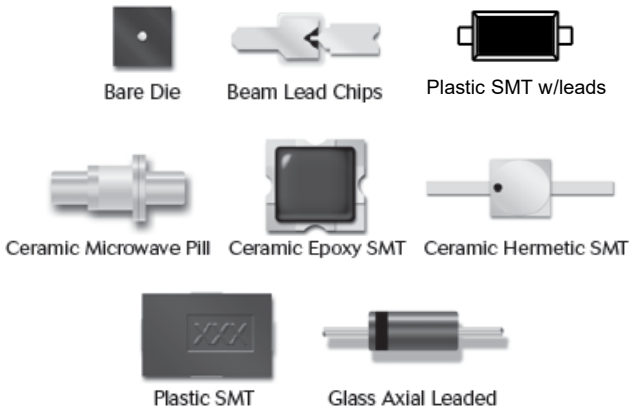

Chip & Beam Lead Electrical Specifications: T_A = 25°C

Model	Voltage Breakdown (V_B)	Junction Capacitance (C_J)		Lifetime (t)		Transition Time (t_t)		Frequency Cutoff (F_{CO})	Theta (θ_{JC})
	V	pF		ns		ps		GHz	°C/W
	Min.	Min.	Max.	Min.	Typ.	Typ.	Max.	Typ.	Max.
Chip									
MMD805-C12	60	2.5	3.5	80	100	250	300	130	15
MMD810-C12	50	1.5	2.5	40	70	200	250	200	22
MMD820-C12	40	1.0	1.7	30	60	80	100	390	25
MMD830-C11	25	0.5	1.0	15	30	60	80	700	45
MMD832-C11	20	0.4	0.8	10	15	60	80	660	50
MMD835-C11	15	0.3	0.7	10	20	60	70	800	60
MMD837-C11	20	0.2	0.4	5	10	60	70	1300	60
MMD840-C11	15	0.2	0.4	7	15	60	70	880	60
Beam Lead									
MMDB30-B11	14	0.15	0.25	1	4	30	38	530	600
MMDB35-B11	16	0.13	0.20	1	4	35	45	482	600
MMDB45-B11	25	0.11	0.20	3	8	45	58	410	600

Test Conditions:
V_B: I_R = 10 µA
C_J: V_R = 6 V, 1 MHz
t: I_F = 10 mA, I_R = 6 mA @ 50% Recovery
t_t: for Chip: I_F = 10 mA, V_R = 10 V
t_t: for Beam Lead: I_F = 3 mA, V_R = 7 V
F_{CO}: $1/2\pi R_S$

MACOM Technology Solutions Inc. (MACOM) and its affiliates reserve the right to make changes to the product(s) or information contained herein without notice.
Visit www.macom.com for additional data sheets and product information.

For further information and support please visit:
https://www.macom.com/support

Absolute Maximum Ratings

Parameters	Rating
Reverse Voltage	Rated V_{BR}
Forward Current	Chip = 150 mA Beam Lead = 50 mA
CW Power Dissipation	150°C / θ_{JC} @ +25°C, derate linearly to zero @ T_{HSK} = +175°C
Operating / Storage Temperature	-65°C to +175°C
Mounting / Bonding Temperature	Chip = +310°C for 30 seconds Beam Lead = +235°C for 10 seconds

Chip & Beam Lead Outline Drawings

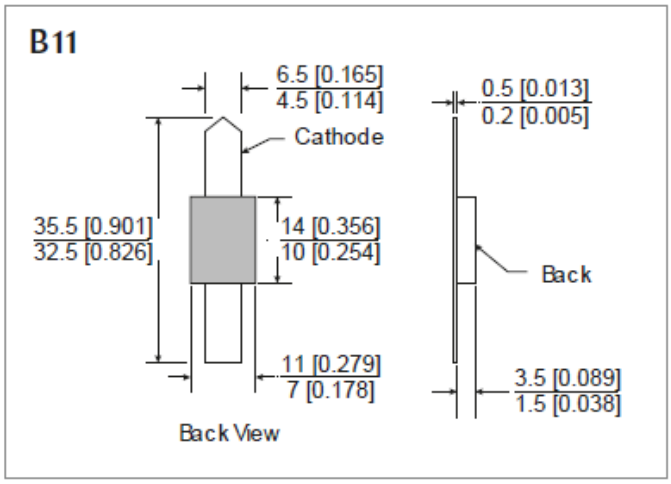

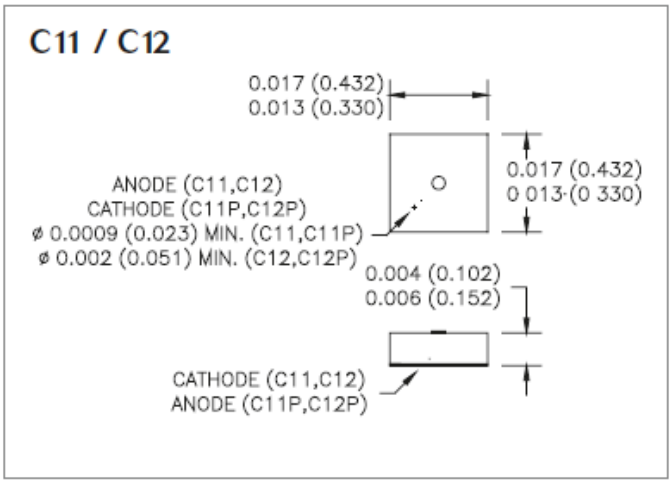

MACOM Technology Solutions Inc. (MACOM) and its affiliates reserve the right to make changes to the product(s) or information contained herein without notice.
Visit www.macom.com for additional data sheets and product information.

For further information and support please visit:
https://www.macom.com/support

Ceramic Packaged Electrical Specifications: T_A = 25°C

Model	Voltage Breakdown (V_B)	Total Capacitance (C_T)		Lifetime (t)		Transition Time (t_t)		Package
	V	pF		ns		ps		
	Min.	Min.	Max.	Min.	Typ.	Typ.	Max.	
MMD805-	60	2.57	3.57	80	100	250	300	E25
		2.58	3.58					E28 / 28X
		2.68	3.68					H20
		2.68	3.68					T86
		2.75	3.75					T89
		2.56	3.56					0805-2
MMD810-	50	1.58	2.58	40	70	200	250	E28 / 28X
		1.68	2.68					H20
		1.68	2.68					T86
		1.75	2.75					T89
MMD820-	40	1.08	1.78	30	60	80	100	E28 / 28X
		1.18	1.88					H20
		1.18	1.88					T86
		1.06	1.76					0805-2
MMD830-	25	0.58	1.08	15	30	60	80	E28 / 28X
		0.68	1.18					H20
		0.68	1.18					T86
		0.56	1.06					0805-2
MMD832-	20	0.48	0.88	10	15	60	80	E28 / 28X
		0.58	0.98					H20
		0.58	0.98					T86
		0.46	0.86					0805-2
MMD835-	15	0.38	0.88	10	20	50	70	E28 / 28X
		0.42	0.92					H20
		0.48	0.98					T86
		0.36	0.86					0805-2

Test Conditions:
V_B: I_R = 10 µA
C_T: V_R = 6 V, 1 MHz
t: I_F = 10 mA, I_R = 6 mA @ 50% Recovery
t_t: for MMD805 - MMD840: I_F = 10 mA, V_R = 10 V
t_t: for MMDB30 - MMDB45: I_F = 3 mA, V_R = 7 V

(Continued next page)

MACOM Technology Solutions Inc. (MACOM) and its affiliates reserve the right to make changes to the product(s) or information contained herein without notice.
Visit www.macom.com for additional data sheets and product information.

For further information and support please visit:
https://www.macom.com/support

Ceramic Packaged Electrical Specifications: T_A = 25°C

Model	Voltage Breakdown (V_B)	Total Capacitance (C_T)		Lifetime (t)		Transition Time (t_t)		Package
	V	pF		ns		ps		
	Min.	Min.	Max.	Min.	Typ.	Typ.	Max.	
MMD837-	20	0.28	0.48	5	10	50	70	E28 / 28X
		0.32	0.52					H27
		0.38	0.58					T86
		0.26	0.46					805-2
MMD840-	15	0.28	0.48	7	15	50	70	E28 / 28X
		0.32	0.52					H27
		0.38	0.58					T86
		0.26	0.46					0805-2
MMDB30-	14	0.23	0.33	1	4	30	38	E28 / 28X
		0.20	0.30					0402
		0.21	0.31					0805-2
MMDB35-	16	0.21	0.28	1	4	35	45	E28 / 28X
		0.18	0.22					0402
		0.19	0.26					0805-2
MMDB45-	25	0.19	0.28	3	8	45	58	E28 / 28X
		0.16	0.25					0402
		0.17	0.26					0805-2

Test Conditions:
V_B: I_R = 10 µA
C_T: V_R = 6 V, 1 MHz
t: I_F = 10 mA, I_R = 6 mA @ 50% Recovery
t_t: for MMD805 - MMD840: I_F = 10 mA, V_R = 10 V
t_t: for MMDB30 - MMDB45: I_F = 3 mA, V_R = 7 V

Absolute Maximum Ratings

Parameters	Rating
Reverse Voltage	Rated V_{BR}
Forward Current	MMD = 150 mA MMDB = 50 mA
Operating / Storage Temperature	-65°C to +175°C
Mounting / Bonding Temperature	+260°C peak per JEDEC J-STD-20C

MACOM Technology Solutions Inc. (MACOM) and its affiliates reserve the right to make changes to the product(s) or information contained herein without notice.
Visit www.macom.com for additional data sheets and product information.

For further information and support please visit:
https://www.macom.com/support

Ceramic Outline Drawings: Dimension = mils (mm)

E25

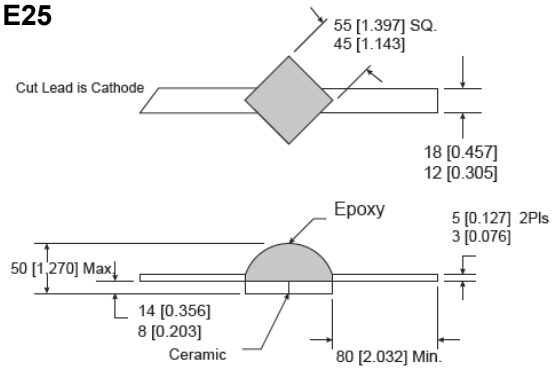

Capacitance (C_P) = 0.07 pF
Inductance (L_P) = 0.4 nH

E25

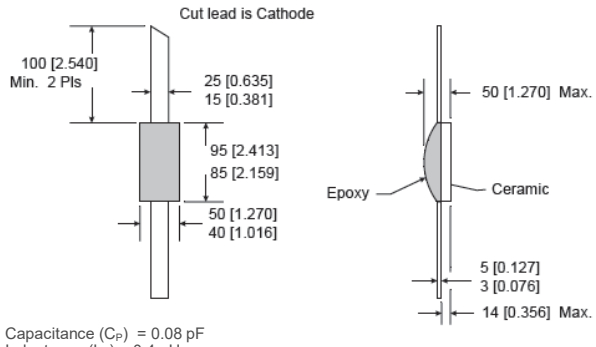

Capacitance (C_P) = 0.08 pF
Inductance (L_P) = 0.4 nH

E28X

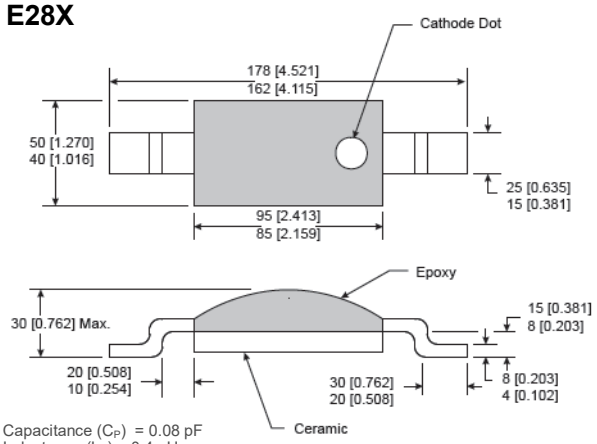

Capacitance (C_P) = 0.08 pF
Inductance (L_P) = 0.4 nH

H20

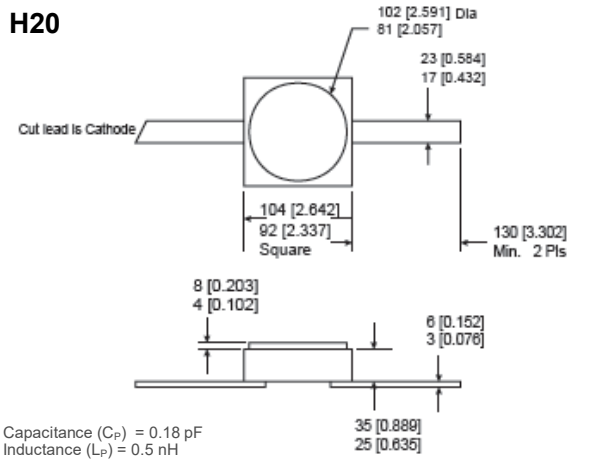

Capacitance (C_P) = 0.18 pF
Inductance (L_P) = 0.5 nH

H27

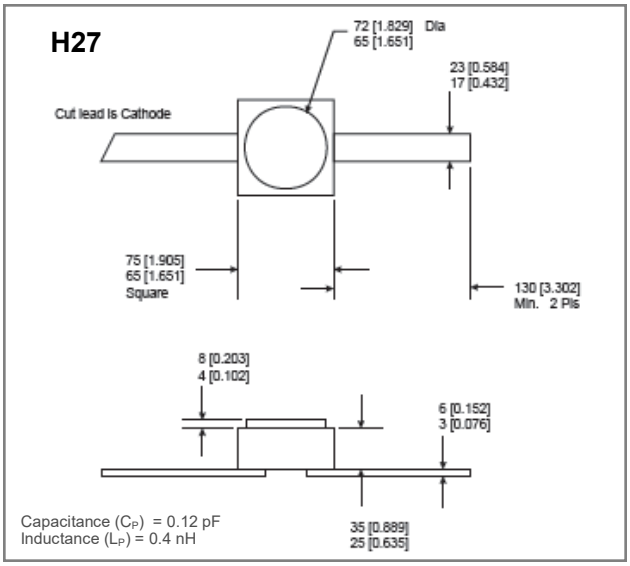

Capacitance (C_P) = 0.12 pF
Inductance (L_P) = 0.4 nH

(Continued next page)

MACOM Technology Solutions Inc. (MACOM) and its affiliates reserve the right to make changes to the product(s) or information contained herein without notice.
Visit www.macom.com for additional data sheets and product information.

For further information and support please visit:
https://www.macom.com/support

Ceramic Outline Drawings: Dimension = mils (mm)

T86

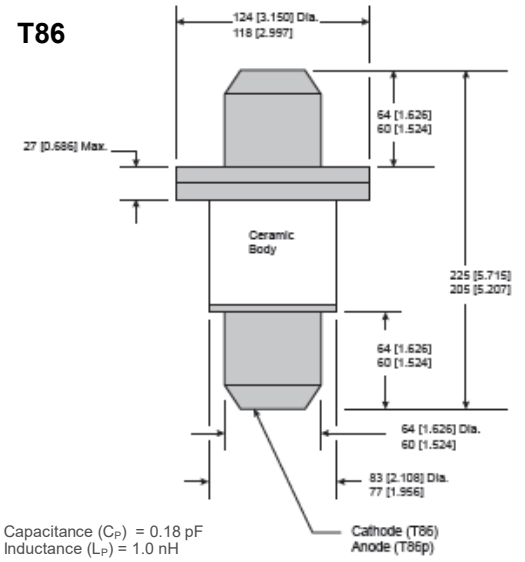

Capacitance (C_P) = 0.18 pF
Inductance (L_P) = 1.0 nH

T89

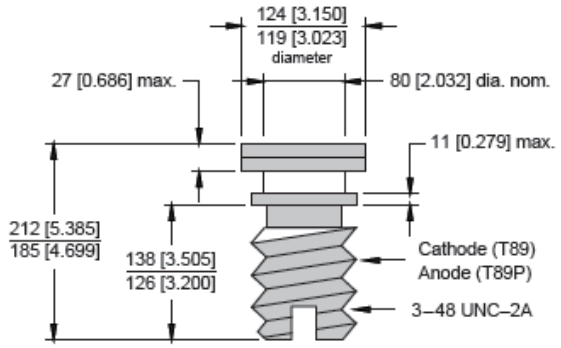

Capacitance (C_P) = 0.25 pF
Inductance (L_P) = 0.4 nH

0402

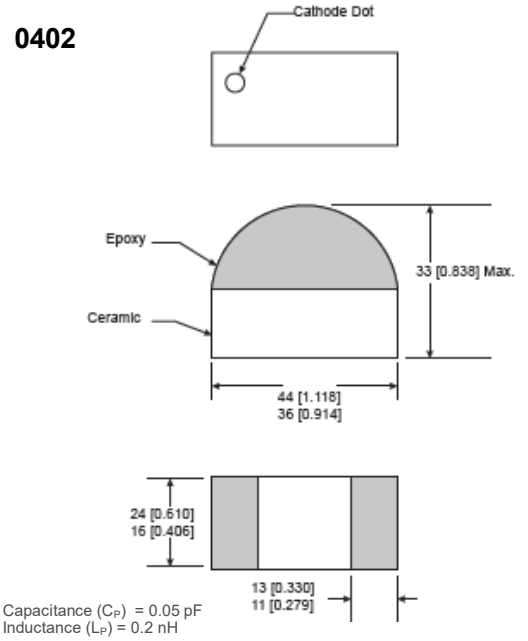

Capacitance (C_P) = 0.05 pF
Inductance (L_P) = 0.2 nH

0805-2

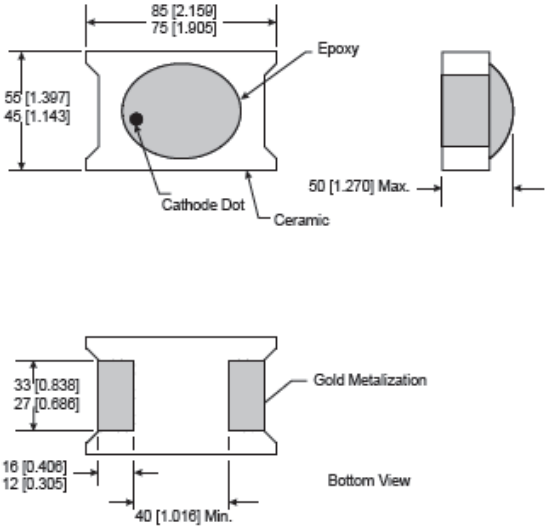

Capacitance (C_P) = 0.06 pF
Inductance (L_P) = 0.4 nH

MACOM Technology Solutions Inc. (MACOM) and its affiliates reserve the right to make changes to the product(s) or information contained herein without notice.
Visit www.macom.com for additional data sheets and product information.

For further information and support please visit:
https://www.macom.com/support

Glass Packaged Electrical Specifications: T_A = 25°C

Model # (-package)	Voltage Breakdown (V_B)	Total Capacitance (C_T)		Lifetime (t)		Transition Time (t_t)		Package
	V	pF		ns		ps		
	Min.	Typ.	Max.	Min.	Typ.	Typ.	Max.	
MMD0151-	15	0.70	0.80	10	15	100	—	A15
MMD0153-	25	0.45	0.55	10	15	95	—	
MMD0803-	70	4.15	6.15	200	250	275	400	
MMD0815-	50	3.15	4.15	100	135	180	320	
MMD0825-	45	1.15	2.15	30	50	130	160	
MMD0833-	25	1.75	1.80	10	15	90	—	
MMD0840-	15	0.60	0.75	10	20	75	—	

Test Conditions:
V_B: I_R = 10 µA
C_T: for MMD0151 & MMD0153: V_R = 6 V, 1 MHz
C_T: for MMD0803 - MMD0840: V_R = 10 V, 1 MHz
t: I_F = 10 mA, I_R = 6 mA @ 50% Recovery
t_t: for MMD0803 - MMD0825: I_F = 10 mA, V_R = 10 V
t_t: for MMD0151, MMD0153, MMD0833, MMD0840: chip data packaged limits to 100 ps

Absolute Maximum Ratings

Parameters	Rating
Reverse Voltage	Rated V_{BR}
Forward Current	100 mA
Thermal Resistance, Junction to Case	+600°C/W
Operating / Storage Temperature	-65°C to +200°C
Mounting / Bonding Temperature	+230°C for 10 seconds

Glass Outline Drawing

A15

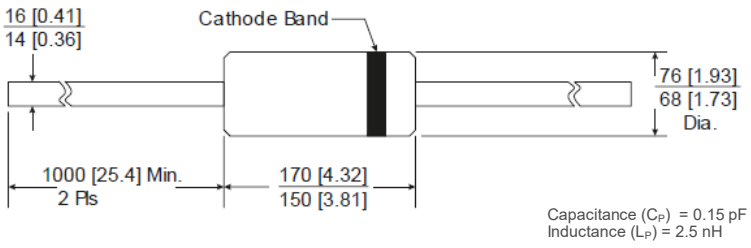

MACOM Technology Solutions Inc. (MACOM) and its affiliates reserve the right to make changes to the product(s) or information contained herein without notice.
Visit www.macom.com for additional data sheets and product information.

For further information and support please visit:
https://www.macom.com/support

Plastic Packaged Electrical Specifications: T_A = 25°C

Model	Voltage Breakdown (V_B)	Junction Capacitance (C_J)		Lifetime (t)		Transition Time (t_t)		Package
	V	pF		ns		ps		
	Min.	Min.	Max.	Min.	Typ.	Typ.	Max.	
SMMD805-	60	2.5	3.5	80	100	250	300	SOT23 (-0S, -1S)
								SOD323
SMMD810-	50	1.5	2.5	40	70	200	250	SOT23 (-0S, -1S)
								SOD323
SMMD820-	40	1.0	1.7	30	60	110	125	SOT23 (-0S, -1S)
								SOD323
SMMD830-	25	0.5	1.0	15	30	90	110	SOT23 (-0S, -1S)
								SOD323
SMMD832-	20	0.4	0.8	10	20	85	100	SOT23 (-0S, -1S)
								SOD323
								SC79 (SOD523)*
SMMD835-	20	0.3	0.7	10	15	80	100	SOT23 (-0S, -1S)
								SOD323
SMMD837-	20	0.2	0.4	5	12	75	90	SOT23 (-0S, -1S)
								SOD323
SMMD840-	15	0.2	0.4	5	10	70	90	SOT23 (-0S, -1S)
								SOD323

Test Conditions:
V_B: I_R = 10 µA
C_J: V_R = 6 V, 1 MHz
t: I_F = 10 mA, I_R = 6 mA @ 50% Recovery

* **MAVR-011057-12790T**
V_B: I_R @ 10 µA = 20 V min.
C_t: V_R @ 6 V, 1 MHz = 0.75 pF max.
TI : If @ 10 mA, I_R @ 6 mA @ 50% Recovery = 10 ns typ.

Absolute Maximum Ratings

Parameters	Rating
Reverse Voltage	Rated V_{BR}
Forward Current	100 mA
Power Dissipation	250 mW, derate linearly to zero @ T_A = +150°C
Operating / Storage Temperature	-65°C to +150°C
Mounting / Bonding Temperature	+260°C peak per JEDEC J-STD-20C

MACOM Technology Solutions Inc. (MACOM) and its affiliates reserve the right to make changes to the product(s) or information contained herein without notice.
Visit www.macom.com for additional data sheets and product information.

For further information and support please visit:
https://www.macom.com/support

Plastic Outline Drawings

SOT23

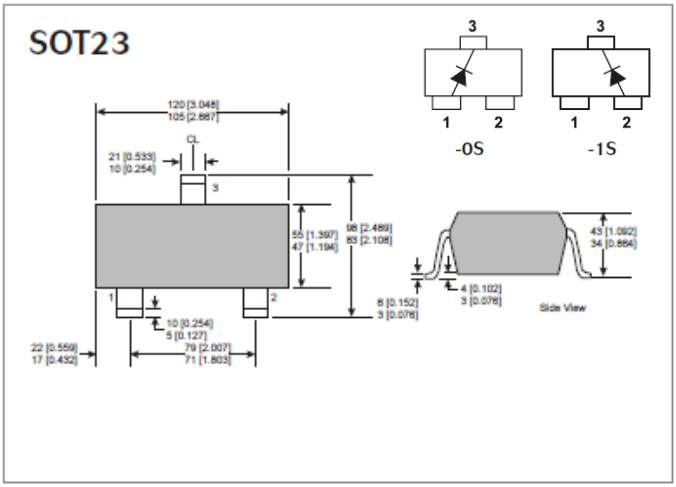

SOD323

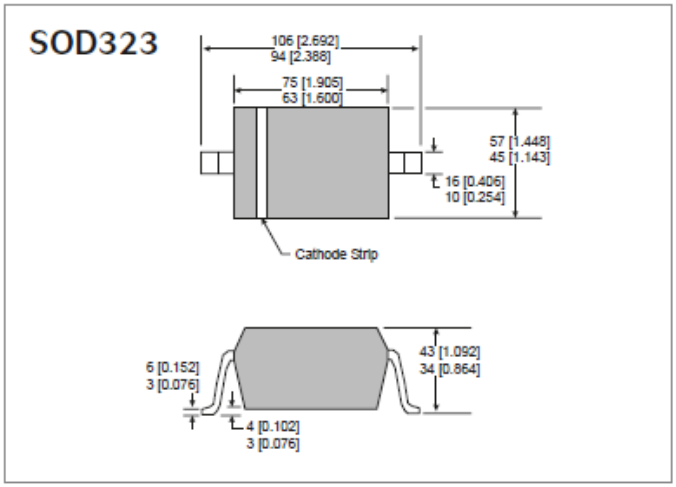

SC-79 (SOD523)

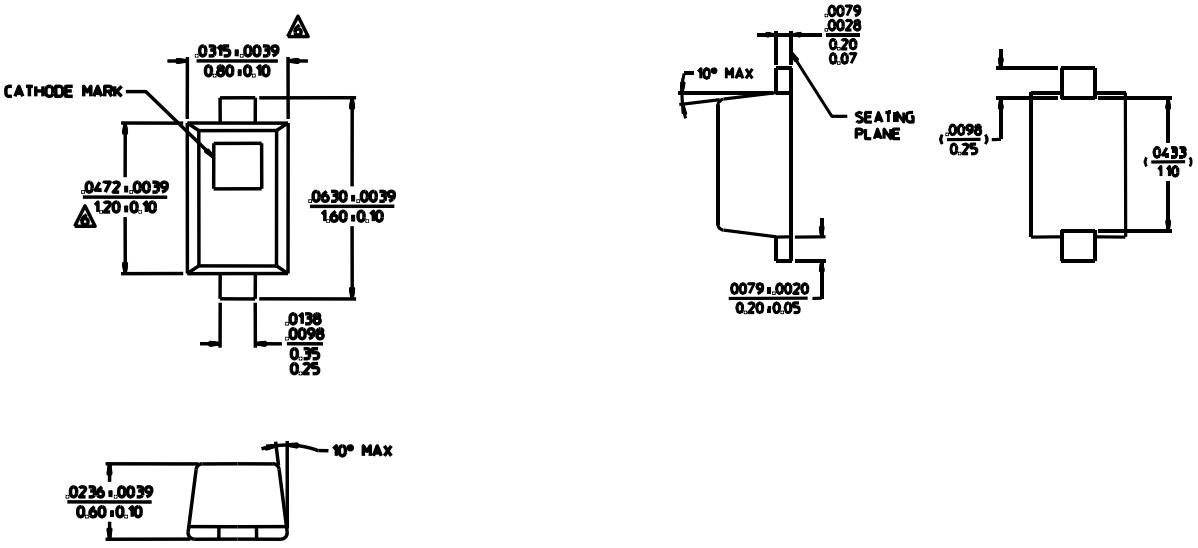

MACOM Technology Solutions Inc. (MACOM) and its affiliates reserve the right to make changes to the product(s) or information contained herein without notice.
Visit www.macom.com for additional data sheets and product information.

For further information and support please visit:
https://www.macom.com/support

Typical Performance Curves: T_A = 25°C

Transition Time vs. Drive

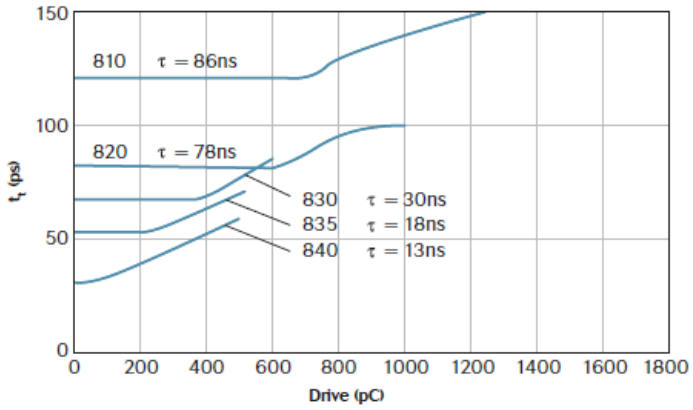

Transition Time vs. Forward Current

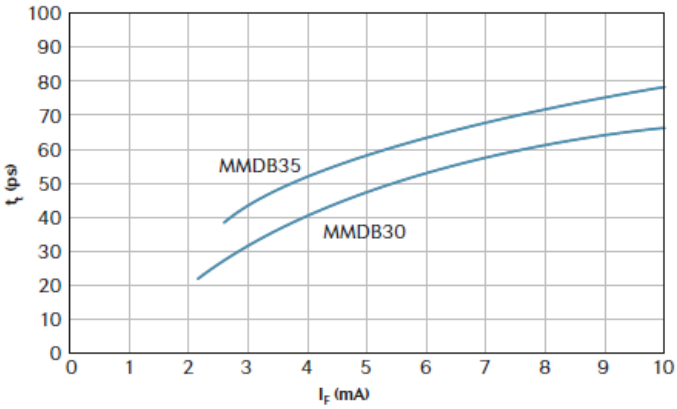

Transition Time Test Circuit

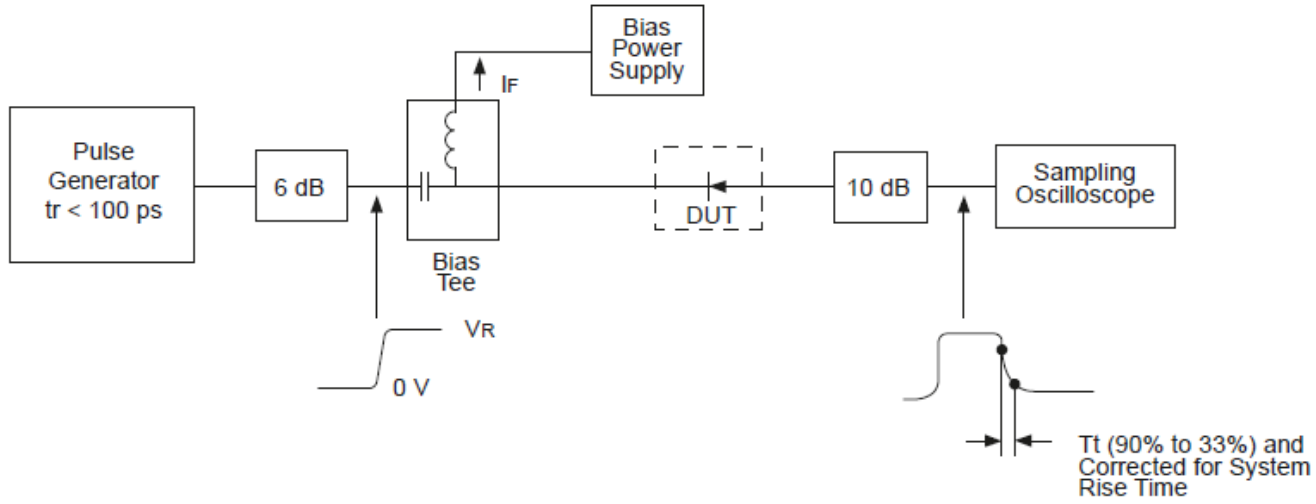

MACOM Technology Solutions Inc. (MACOM) and its affiliates reserve the right to make changes to the product(s) or information contained herein without notice.
Visit www.macom.com for additional data sheets and product information.

For further information and support please visit:
https://www.macom.com/support

MACOM Technology Solutions Inc. (“MACOM”). All rights reserved.
These materials are provided in connection with MACOM’s products as a service to its customers and may be used for informational purposes only. Except as provided in its Terms and Conditions of Sale or any separate agreement, MACOM assumes no liability or responsibility whatsoever, including for (i) errors or omissions in these materials; (ii) failure to update these materials; or (iii) conflicts or incompatibilities arising from future changes to specifications and product descriptions, which MACOM may make at any time, without notice. These materials grant no license, express or implied, to any intellectual property rights.

THESE MATERIALS ARE PROVIDED "AS IS" WITH NO WARRANTY OR LIABILITY, EXPRESS OR IMPLIED, RELATING TO SALE AND/OR USE OF MACOM PRODUCTS INCLUDING FITNESS FOR A PARTICULAR PURPOSE, MERCHANTABILITY, INFRINGEMENT OF INTELLECTUAL PROPERTY RIGHT, ACCURACY OR COMPLETENESS, OR SPECIAL, INDIRECT, INCIDENTAL, OR CONSEQUENTIAL DAMAGES WHICH MAY RESULT FROM USE OF THESE MATERIALS.

MACOM products are not intended for use in medical, lifesaving or life sustaining applications. MACOM customers using or selling MACOM products for use in such applications do so at their own risk and agree to fully indemnify MACOM for any damages resulting from such improper use or sale.

MACOM Technology Solutions Inc. (MACOM) and its affiliates reserve the right to make changes to the product(s) or information contained herein without notice.
Visit www.macom.com for additional data sheets and product information.

For further information and support please visit:
https://www.macom.com/support