Low Barrier Silicon Schottky Diodes

MSS30-xxx-x Series
Rev. V3

Features

- V_F, R_D and C_J Matching Options
- Chip, Beam Lead and Packaged Devices
- Hi-Rel Screening per MIL-PRF-19500 and MIL-PRF-38534 Available



Description

The MSS30-xxx-x Series of Schottky diodes are fabricated on N-Type epitaxial substrates using proprietary processes that yield the highest FCOs in the industry. Optimum mixer performance is obtained with LO power of -3 dBm to +3 dBm per diode.

Chip

Electrical Specifications: T_A = 25°C

Model	Configuration	V_F Typ. V	V_{BR} Min. V	C_J Typ. / Max. pF	R_S Typ. Ω	R_D Max. Ω	F_{CO} Typ. GHz	Outline
MSS30-046-C15	Single Junction	0.29	2	0.10 / 0.12	10	18	160	C15
MSS30-050-C15	Single Junction	0.27	2	0.15 / 0.18	6	15	175	C15
Test Conditions		I_F = 1 mA	I_R = 10 µA	V_R = 0 V F = 1 MHz	I = 5 mA			

Beam Lead

Electrical Specifications: T_A = 25°C

Model	Configuration	V_F Typ. V	V_{BR} Min. V	C_J Typ. / Max. pF	R_S Typ. Ω	R_D Max. Ω	F_{CO} Typ. GHz	Outline
MSS30-142-B10B	Single Junction	0.29	2	0.07 / 0.10	13	22	175	B10B
MSS30-148-B10B	Single Junction	0.27	2	0.12 / 0.15	7	15	190	B10B
MSS30-154-B10B	Single Junction	0.25	2	0.22 / 0.25	3	12	240	B10B
MSS30-242-B20	Series Tee	0.29	2	0.07 / 0.10	13	22	175	B20
MSS30-248-B20	Series Tee	0.27	2	0.12 / 0.15	7	15	190	B20
MSS30-254-B20	Series Tee	0.25	2	0.22 / 0.25	3	12	240	B20
MSS30-346-B21	Anti Parallel Pair	0.27	-	0.27 / 0.30	11	16	55	B21
MSS30-442-B41	Ring Quad	0.29	2	0.07 / 0.10	13	22	175	B41
MSS30-448-B41	Ring Quad	0.27	2	0.12 / 0.15	7	15	190	B41
MSS30-454-B40	Ring Quad	0.25	2	0.22 / 0.25	3	12	240	B40
Test Conditions		I_F = 1 mA	I_R = 10 µA	V_R = 0 V F = 1 MHz	I = 5 mA			

MACOM Technology Solutions Inc. (MACOM) and its affiliates reserve the right to make changes to the product(s) or information contained herein without notice.
Visit www.macom.com for additional data sheets and product information.

For further information and support please visit:
https://www.macom.com/support

Packaged

Electrical Specifications: T_A = 25°C

Model	Configuration	V_F Typ. V	V_{BR} Min. V	C_T Typ. / Max. pF	R_S Typ. Ω	R_D Max. Ω	F_{CO} Typ. GHz	Outline
MSS30-046-P55	Single Junction	0.29	2	0.23 / 0.30	10	18	160	P55
MSS30-046-P86	Single Junction	0.29	2	0.27 / 0.33	10	18	160	P86
MSS30-050-P55	Single Junction	0.27	2	0.28 / 0.35	6	15	175	P55
MSS30-050-P86	Single Junction	0.27	2	0.32 / 0.38	6	15	175	P86
MSS30-142-E25	Single Junction	0.29	2	0.20 / 0.26	13	22	175	E25
MSS30-142-H20	Single Junction	0.29	2	0.25 / 0.31	13	22	175	H20
MSS30-148-E25	Single Junction	0.27	2	0.25 / 0.31	7	15	190	E25
MSS30-148-H20	Single Junction	0.27	2	0.30 / 0.36	7	15	190	H20
MSS30-154-E25	Single Junction	0.25	2	0.35 / 0.41	3	12	240	E25
MSS30-154-H20	Single Junction	0.25	2	0.40 / 0.46	3	12	240	H20
MSS30-242-E35	Series Tee	0.29	2	0.15 / 0.21	13	22	175	E35
MSS30-242-H30	Series Tee	0.29	2	0.25 / 0.31	13	22	175	H30
MSS30-248-E35	Series Tee	0.27	2	0.25 / 0.31	7	15	190	E35
MSS30-248-H30	Series Tee	0.27	2	0.30 / 0.36	7	15	190	H30
MSS30-254-E35	Series Tee	0.25	2	0.35 / 0.41	3	12	240	E35
MSS30-254-H30	Series Tee	0.25	2	0.40 / 0.46	3	12	240	H30
MSS30-346-E25	Anti-Parallel Pair	0.27	-	0.35 / 0.40	11	16	55	E25
MSS30-346-H20	Anti-Parallel Pair	0.27	-	0.45 / 0.50	11	16	55	H20
MSS30-442-E45	Ring Quad	0.29	2	0.15 / 0.21	13	22	175	E45
MSS30-448-E45	Ring Quad	0.27	2	0.20 / 0.26	7	15	190	E45
MSS30-454-E45	Ring Quad	0.25	2	0.25 / 0.31	3	12	240	E45
MSS30-454-H40	Ring Quad	0.25	2	0.25 / 0.31	3	12	240	H40
Test Conditions		I_F = 1 mA	I_R = 10 µA	V_R = 0 V F = 1 MHz	I = 5 mA			

Absolute Maximum Ratings

Parameters	Rating
Reverse Voltage	Rated V_{BR}
Forward Current	50 mA
Power Dissipation	100 mW, per junction @ T_A = 25°C, derate linearly to 0 @ T_A = +150°C
Operating Temperature	-65°C to +150°C
Storage Temperature	-65°C to +150°C
Soldering Temperature (packaged)	+230°C for 5 seconds
Beam Lead Pull Strength	4 G minimum

MACOM Technology Solutions Inc. (MACOM) and its affiliates reserve the right to make changes to the product(s) or information contained herein without notice.
Visit www.macom.com for additional data sheets and product information.

For further information and support please visit:
https://www.macom.com/support

Typical Performance Curves: T_A = 25°C

Forward Voltage vs. Current

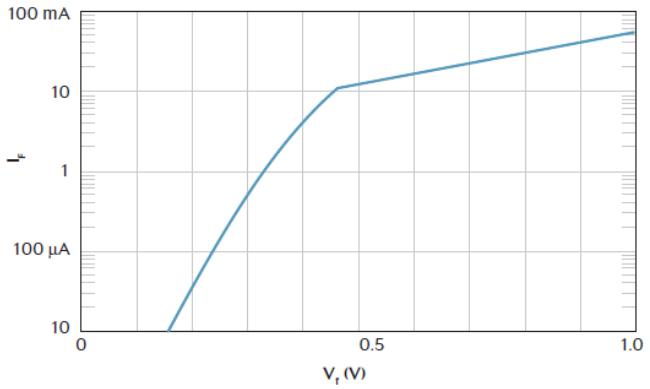

Reverse Current vs. Voltage

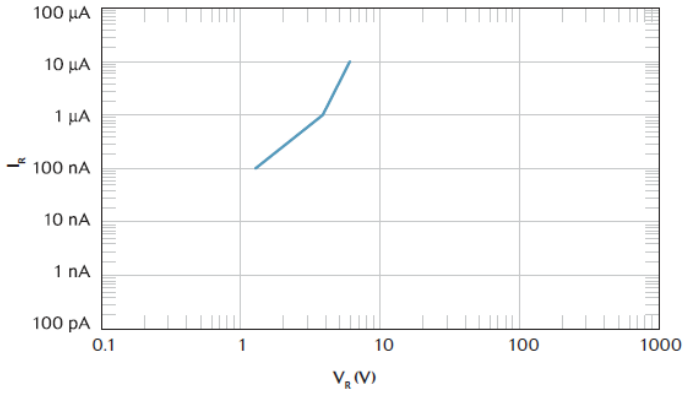

NF & Z_{IF} vs. LO Power

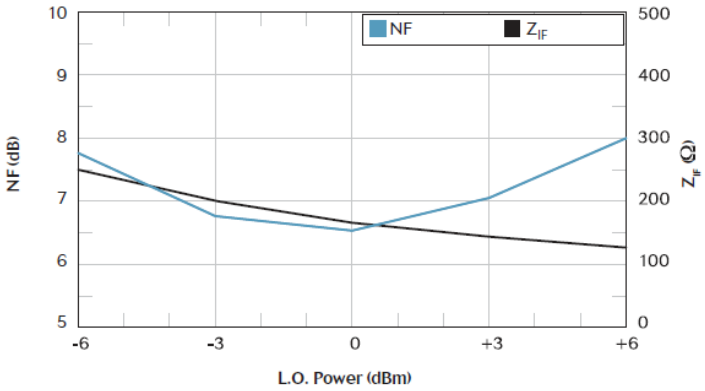

Smith Chart - 50 Ω Reference

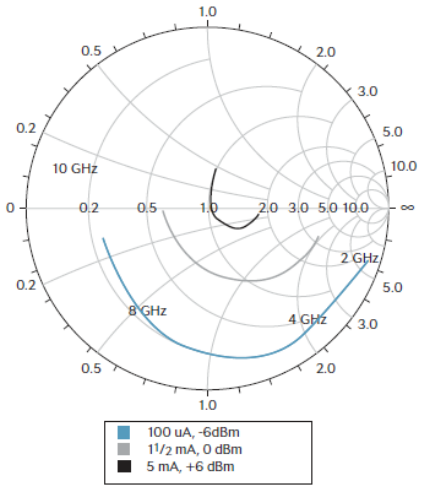

MACOM Technology Solutions Inc. (MACOM) and its affiliates reserve the right to make changes to the product(s) or information contained herein without notice.
Visit www.macom.com for additional data sheets and product information.

For further information and support please visit:
https://www.macom.com/support

Outline Drawings

C15

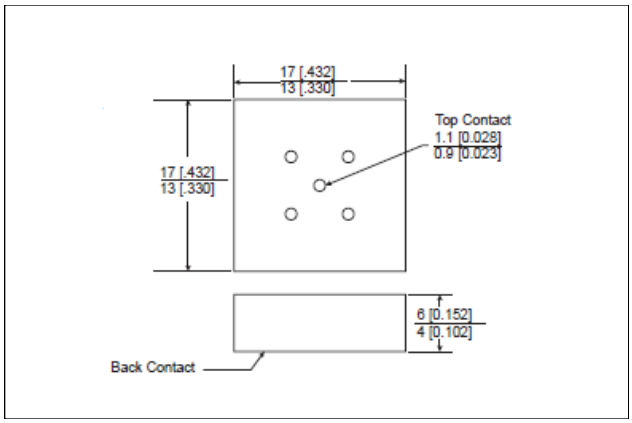

B10B

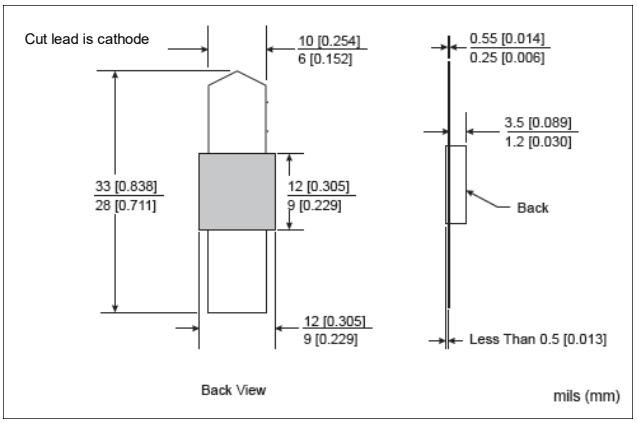

B20

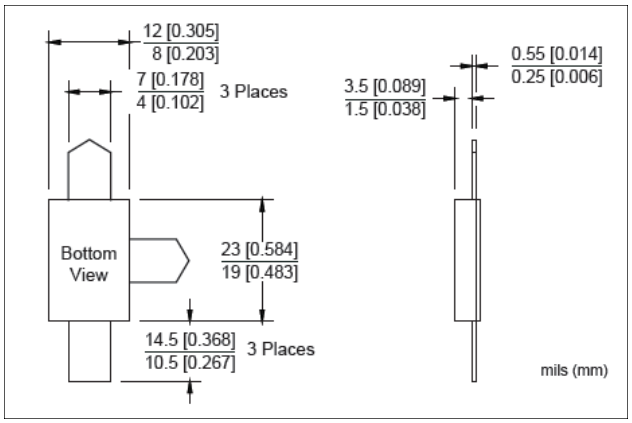

B21

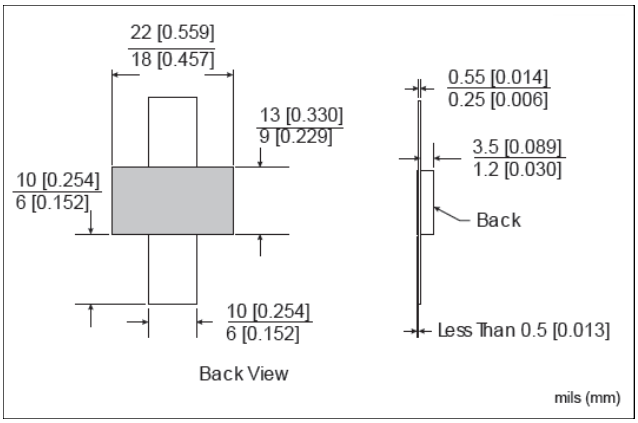

B40

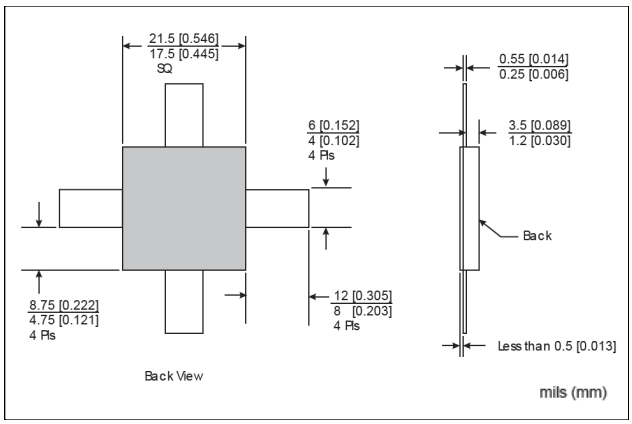

B41

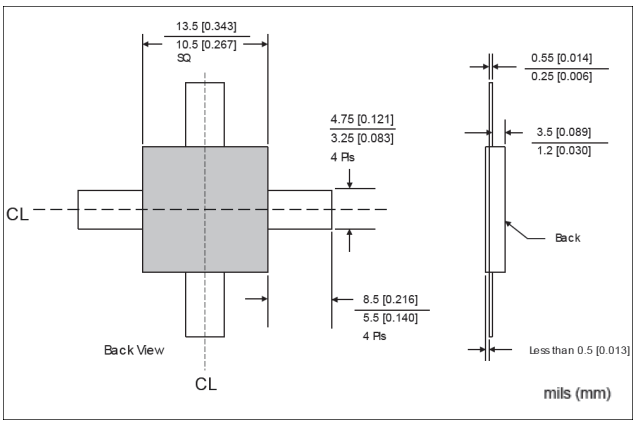

MACOM Technology Solutions Inc. (MACOM) and its affiliates reserve the right to make changes to the product(s) or information contained herein without notice.
Visit www.macom.com for additional data sheets and product information.

For further information and support please visit:
https://www.macom.com/support

E25 (non-hermetic)

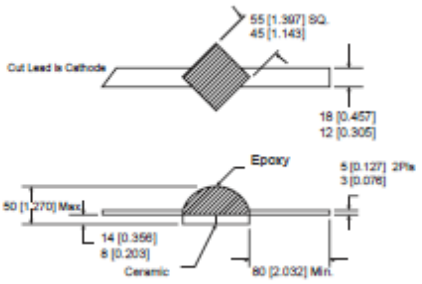

E35 (non-hermetic)

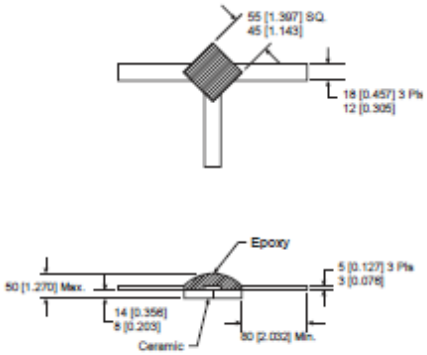

E45 (non-hermetic)

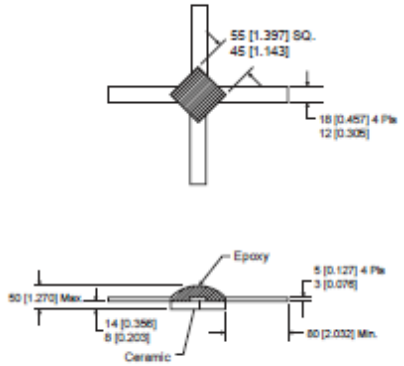

H20 (hermetic)

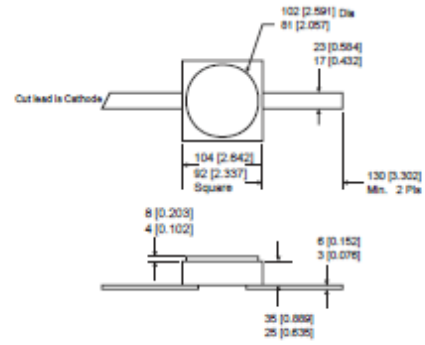

H30 (hermetic)

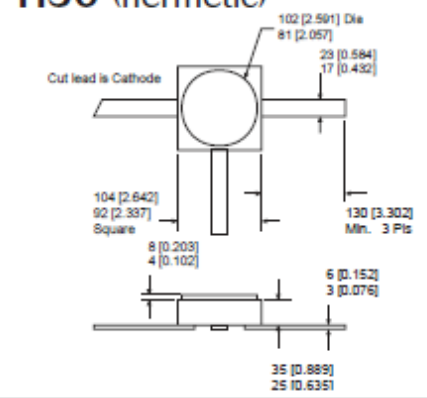

H40 (hermetic)

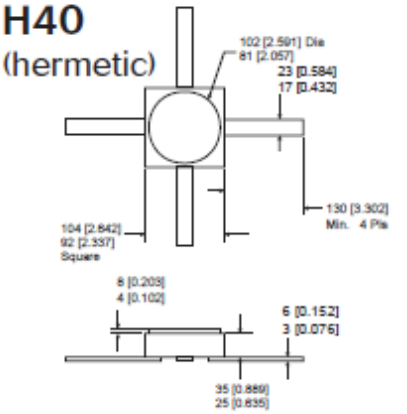

P55 (hermetic)

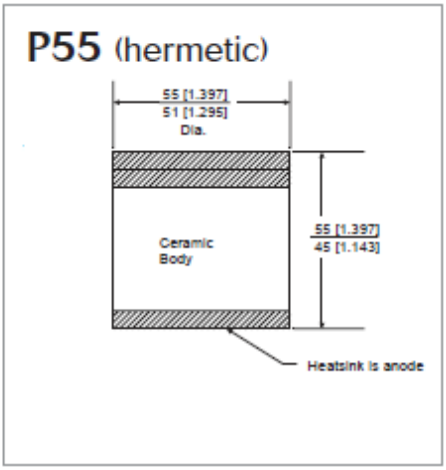

P86 (hermetic)

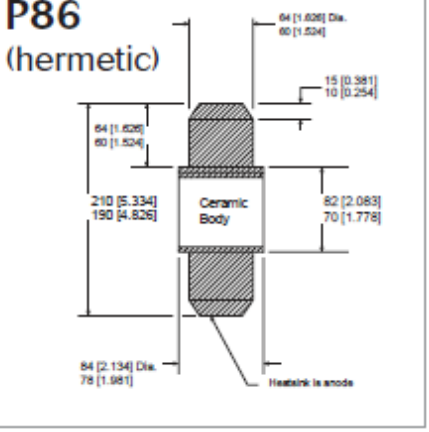

MACOM Technology Solutions Inc. (MACOM) and its affiliates reserve the right to make changes to the product(s) or information contained herein without notice.
Visit www.macom.com for additional data sheets and product information.

For further information and support please visit:
https://www.macom.com/support

MACOM Technology Solutions Inc. (“MACOM”). All rights reserved.
These materials are provided in connection with MACOM’s products as a service to its customers and may be used for informational purposes only. Except as provided in its Terms and Conditions of Sale or any separate agreement, MACOM assumes no liability or responsibility whatsoever, including for (i) errors or omissions in these materials; (ii) failure to update these materials; or (iii) conflicts or incompatibilities arising from future changes to specifications and product descriptions, which MACOM may make at any time, without notice. These materials grant no license, express or implied, to any intellectual property rights.

THESE MATERIALS ARE PROVIDED "AS IS" WITH NO WARRANTY OR LIABILITY, EXPRESS OR IMPLIED, RELATING TO SALE AND/OR USE OF MACOM PRODUCTS INCLUDING FITNESS FOR A PARTICULAR PURPOSE, MERCHANTABILITY, INFRINGEMENT OF INTELLECTUAL PROPERTY RIGHT, ACCURACY OR COMPLETENESS, OR SPECIAL, INDIRECT, INCIDENTAL, OR CONSEQUENTIAL DAMAGES WHICH MAY RESULT FROM USE OF THESE MATERIALS.

MACOM products are not intended for use in medical, lifesaving or life sustaining applications. MACOM customers using or selling MACOM products for use in such applications do so at their own risk and agree to fully indemnify MACOM for any damages resulting from such improper use or sale.