Mallory Sonalert Products Inc.	Part # AST0927MW-05Q
Sales Outline Drawing	Revision **A**

May not be suitable for all Medical and Aerospace applications.
Contact Mallory Sonalert to discuss your application.
NO CIRCUITRY

Oscillation Frequency (Hz)	2730
Operating Voltage (Vp-p)	4.0 – 6.0
Rated Voltage (Vp-p)	5.0
Current Consumption Max. (mA)	90 at Rated Voltage
Sound Pressure Level (dB/min)	85 at 10cm at Rated Voltage
Coil Resistance (Ω)	32 ± 4
Operating Temperature (°C)	-30 ~ +70
Storage Temperature (°C)	-40 ~ +85
Housing	LCP plastic resin (Color: Black)
Weight (Grams)	0.8
Condition by wave soldering (°C)	250 ±5 / within 5 sec
Condition by hand soldering (°C)	350 ±20 / within 5 sec
Options	For other options contact factory

Dimensions: (units: mm) **TOL:** ±0.5 **PS: Vp-p = 1/2duty, square wave** **RoHS Compliant**

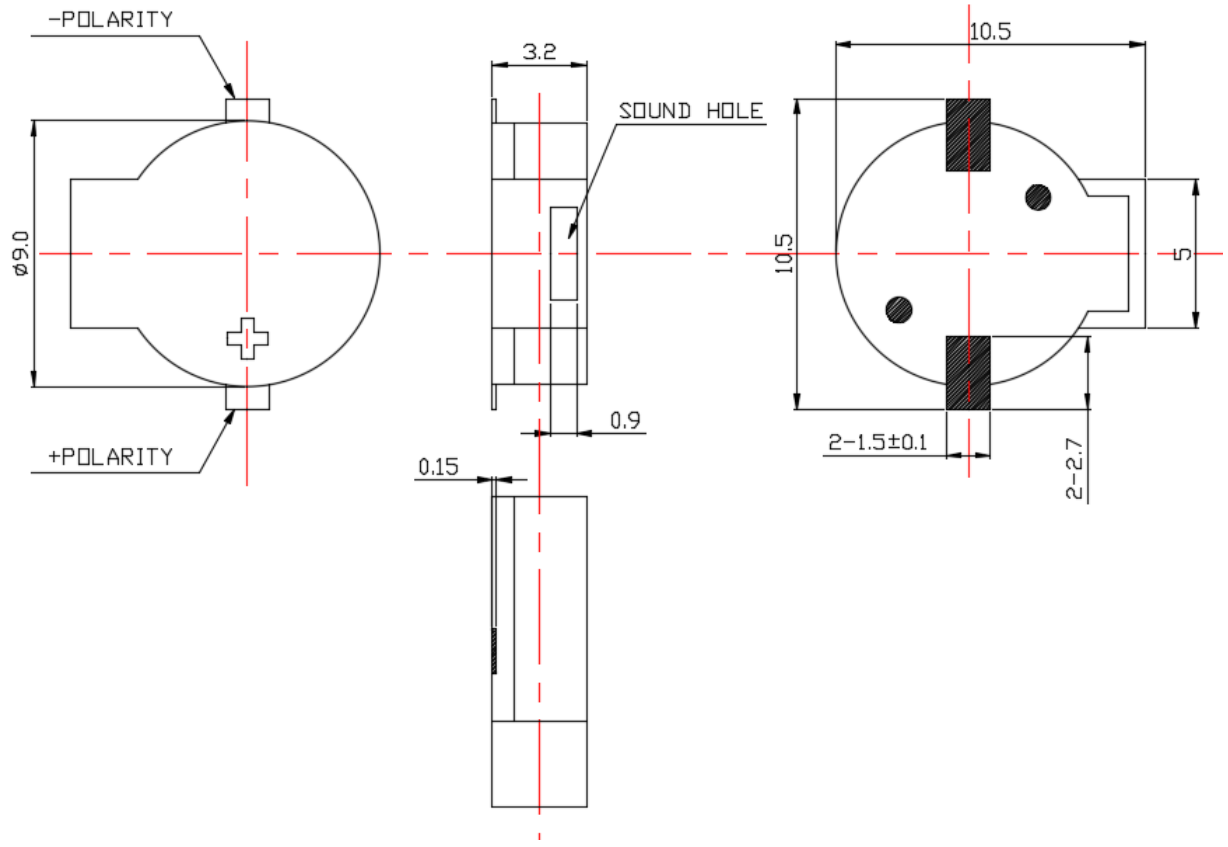

4411 South High School Road, Indianapolis, Indiana 46241 USA ● Phone (317) 612-1000 ● Fax (317) 612-1010 ● http://www.mspindy.com