MALLORY Mallory Sonalert Products Inc.	Part # PF-27N35WQ
Sales Outline Drawing	Revision C

May not be suitable for all medical and aerospace applications.

Specifications: Contact Mallory Sonalert to discuss your application.

Oscillation Frequency (Hz)	3500 ±500
Operating Voltage (VDC)	3 ~ 28
Rated Voltage (VDC)	12
Current Consumption Max. (mA)	15 at Rated Voltage
Sound Pressure Level Min. (dB)	90 at 30cm at Rated Voltage
Tone / Pulse Rate (Hz)	Fast Pulse 3.0 ±20%
Operating Temperature (°C)	-20 ~ +70
Storage Temperature (°C)	-30 ~ +80
Housing	ABS 757 UL94 HB plastic resin (Color: Black)
Leading Wire	28 AWG
Weight (Grams)	7.0
Options	For other options contact factory

RoHS Compliant

Dimensions: (units: mm)

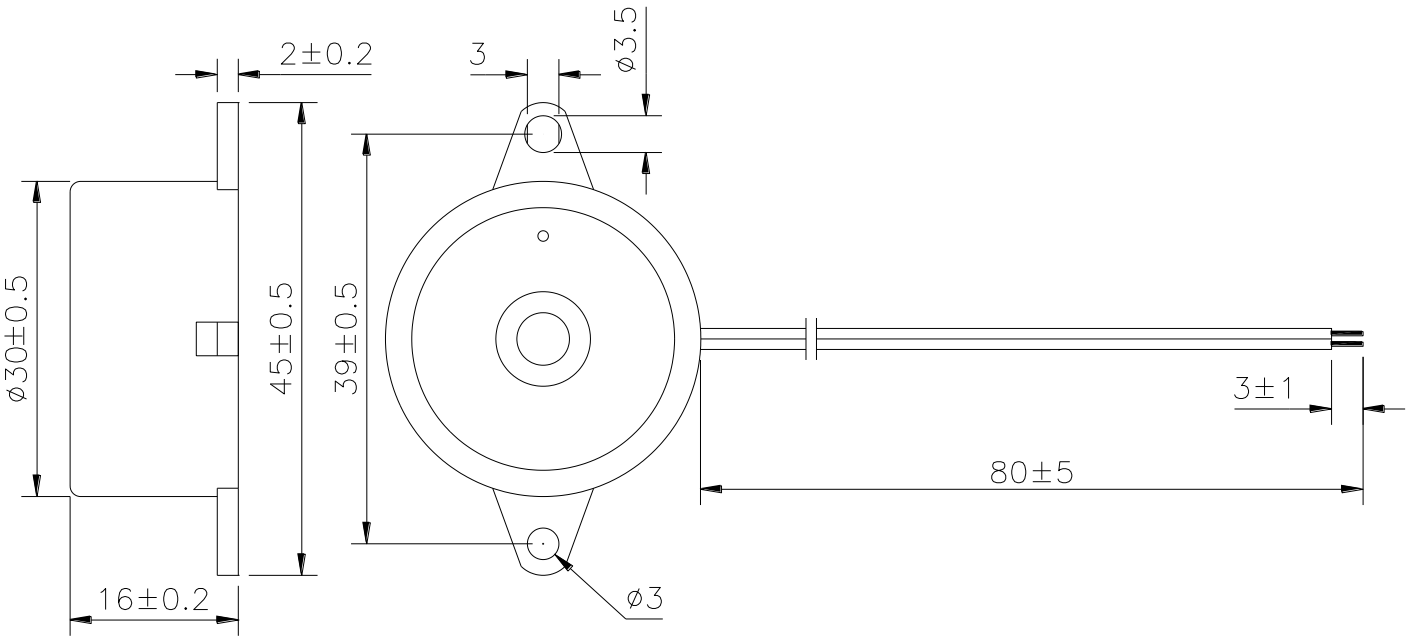

4411 South High School Road, Indianapolis, Indiana 46241 USA ● Phone (317) 612-1000 ● Fax (317) 612-1010 ● http://www.mspindy.com