| MALLORY Mallory Sonalert Products Inc. | Part # PFD-35A29WQ |
|---|---|
| Sales Outline Drawing | Revision C |

**May not be suitable for all medical and aerospace applications.**

**Specifications: Contact Mallory Sonalert to discuss your application.**

| | |
|---|---|
| Oscillation Frequency (Hz) | 2900 ± 500 |
| Operating Voltage (VDC) | 3 ~ 24 |
| Rated Voltage (VDC) | 12 |
| Current Consumption Max. (mA) | 10 at Rated Voltage |
| Sound Pressure Level Min. (dB) | 95 at 30cm at Rated Voltage |
| Tone / Pulse Rate (Hz) | Constant + Fast Pulse 3.0 ±20% |
| Operating Temperature (°C) | -20 ~ +70 |
| Storage Temperature (°C) | -30 ~ +80 |
| Housing | ABS 757 UL94 HB plastic resin (Color: Black) |
| Leading Wire | 28 AWG |
| Weight (Grams) | 15 |
| Options | For other options contact factory |

**RoHS Compliant**

**Dimensions:** (units: mm)

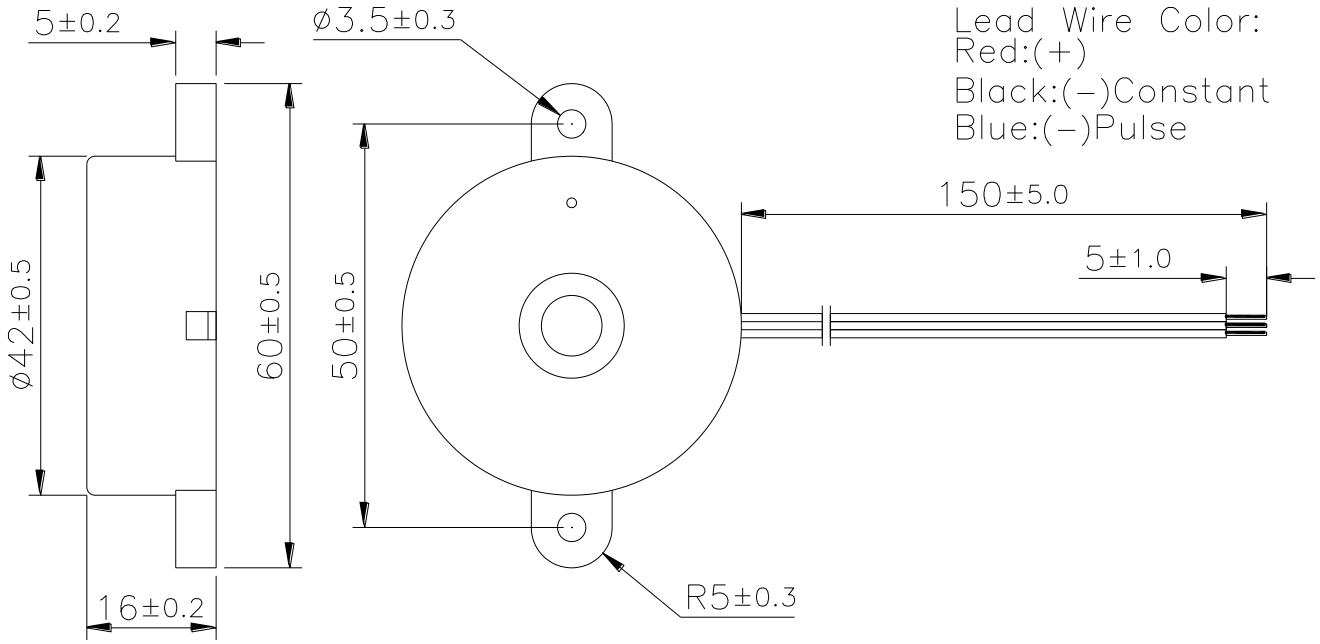


4411 South High School Road, Indianapolis, Indiana 46241 USA ● Phone (317) 612-1000 ● Fax (317) 612-1010 ● http://www.mspindy.com