Mallory Sonalert Products,Inc.

Part #: **SCE048LD2ML2S**

Sales Outline Drawing

Revision: **B**

Specifications:

Sound Level Category:	Loud	Loud
Mode of Operation:	Continuous	Fast Pulse @ 10 PPS
Loudness @ 2 FT:	85 to 95 dB(A) Typ.	85 to 95 dB(A) Typ.
Pulse Rate (PPS):	N/A	10
Frequency:	2200 ± 100 Hz	2200 ± 100 Hz
Connection:	TERMINALS ONLY	TERMINALS; BLACK WIRE TO (-)
Voltage Rating:	28 to 48 VDC	
Current Draw:	40mA MAX	
Housing Material:	6/6 Nylon, Color: Black	
Storage Temperature:	-40° to +85° C	
Operating Temperature	-40° to +85° C	
Panel Mounting:	Recommended hole size is 1.25"(31.75mm). Thread front will fit standard 30mm(1.181") hole.	
Knurled Nut:	Used to attach part to panel. The max recommended torque is 10 in-lbs.	
Weight (Typical):	2.1 oz (60g)	
NEMA 3R,4X, & 12:	Approved with use of ACC03.	
cUL Recognition:	Supply voltage shall employ Transient Voltage Surge Suppression.	
Options:	Please contact factory.	

Dimensions: Inches (mm)

cUL Recognized **ROHS Compliant**

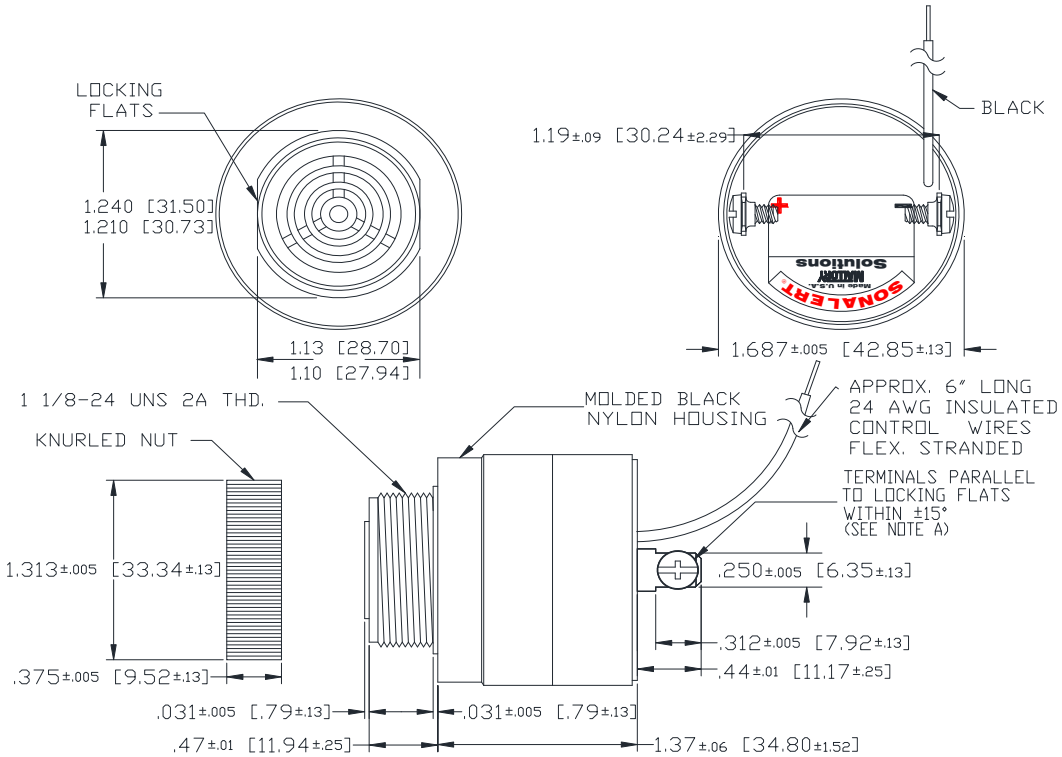

NOTE A: TERMINALS-.032 BRASS TIN PLATED, TAPPED FOR #6-32 SCREW. TWO #6-32 NICKEL PLATED BRASS SCREWS INCLUDED. WILL ACCEPT 1/4" QUICK CONNECT.

NOTE B: MOUNTING- REMOVE BLACK PLASTIC NUT AND INSERT THREADED FRONT THROUGH 1.25" HOLE PUNCHED IN PANEL, IF ORIENTATION IS NEEDED, NOTE LOCKING FLATS ON DRAWING. SCREW NUT BACK ON. DO NOT OVERTIGHTEN.

4411 South High School Road, Indianapolis, Indiana 46241 U.S.A · Phone: (317) 612-1000 Fax: (317) 612-1010 · www.mallory-sonalert.com