Mallory Sonalert Products,Inc.

Part #: **ZT028LACTB**

Sales Outline Drawing

Revision: **E**

Specifications:

Sound Level Category	Loud
Mode of Operation	Continuous
Lens Color	Opaque White
LED Color	BLUE
LED Mode of Operation	Continuous
Voltage Rating	20 to 28 VAC/DC
Frequency	3900 ± 500 Hz
Loudness @ 2 FT	85 to 95 dB(A) Typ.
Current Draw	40mA MAX
Housing Material	6/6 Nylon, Color: Black
Front Cap Material	6/6 Nylon, Color: Opaque White
Storage Temperature	-40° to +80° C
Operating Temperature	-30° to +65° C
Panel Mounting	Recommended hole size is 22.5 mm. Thread front will fit standard 22.5mm hole.
Knurled Nut	Used to attach part to panel. The max recommended torque is 10 in-lbs.
Weight (Typical)	28 g
NEMA 3R,4X, & 12	Approved with use of included gasket.
Options	Please contact factory.

Dimensions: Inches (mm)

cUL Recognized **ROHS Compliant**

PATENT NUMBER 9165440

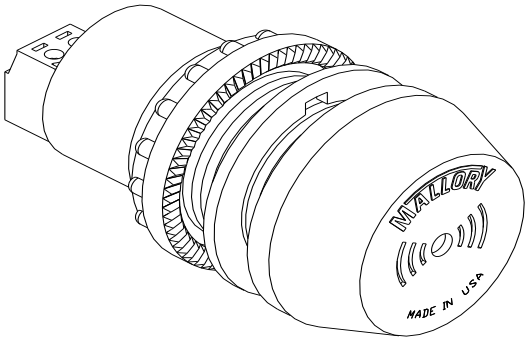

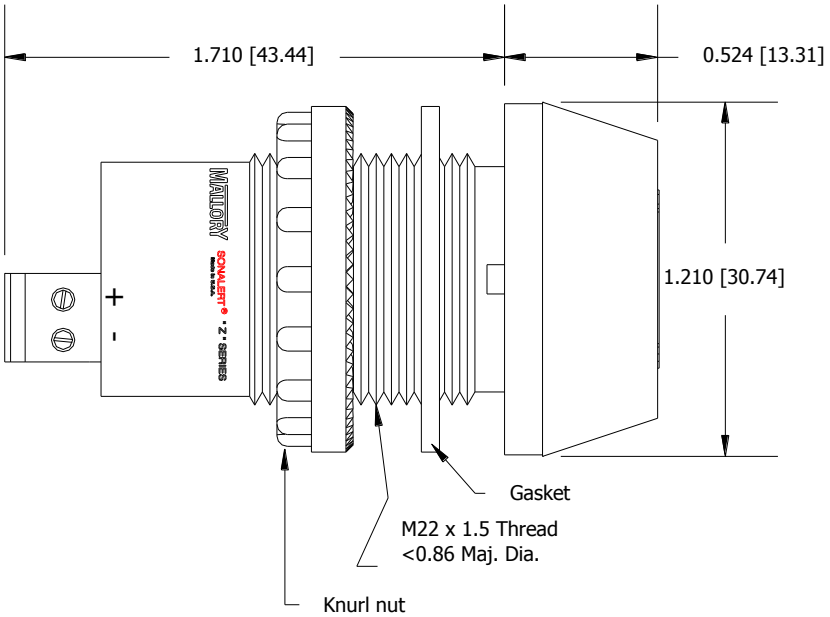

4411 South High School Road, Indianapolis, Indiana 46241 U.S.A · Phone: (317) 612-1000 Fax: (317) 612-1010 www.mspindy.com