COMPACT CORE MODULE WITH WIRELESS AND WIRED CONNECTIVITY

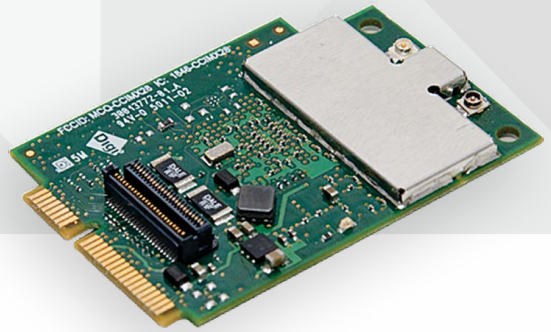

DIGI CONNECTCARD FOR i.MX28

Cost-effective small-footprint System-on-Module solution delivers performance, low-power operation and integrated 802.11a/b/g/n, Bluetooth 4.0 and Ethernet connectivity

Based on the NXP i.MX28 processor family, the ConnectCard for i.MX28 is an ideal embedded platform solution for connected applications in medical and healthcare, energy, transportation and industrial/building automation.

It offers easy design integration and unique peripheral/interface flexibility in an extremely compact and cost-effective form factor. This module is suitable for a wide range of different devices, including battery powered product designs.

The module is equipped with a highly integrated 32-bit ARM core running at up to 454 MHz, on-chip power management, dual Ethernet and 802.11a/b/g/n networking options, Bluetooth® 4.0 connectivity, dual FlexCAN options, GPIO, ADC, UART, USB high-speed, SPI, I2C, I2S, 1-Wire, PWM and JTAG/ETM.

The Digi JumpStart Kit® for Digi Embedded Linux provides a complete turnkey embedded development solution allowing immediate and successful product development with accelerated time-to-market and reduced design risk.

BLOCK DIAGRAM

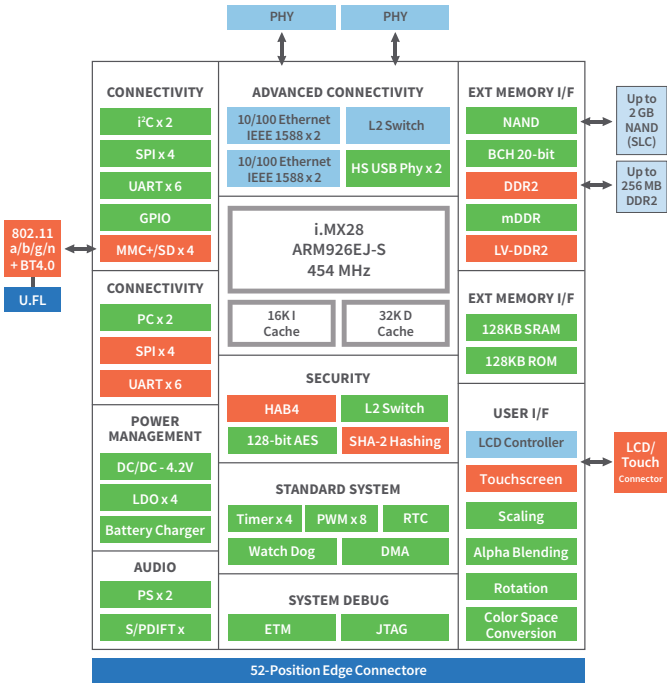

BENEFITS

- Cost-effective design in compact form factor
- 32-bit ARM processor at up to 454 MHz
- Single/dual 10/100 Ethernet connectivity options
- Pre-approved 802.11a/b/g/n Wi-Fi + Bluetooth 4.0
  - Includes Wi-Fi® Access Point mode + Wi-Fi Direct™
  - Support for Bluetooth 3.0 + HS and Bluetooth LE
  - Ready for Cisco CCX and Wi-Fi Logo certification
- Digi Embedded Linux platform
  - Digi Remote Manager® enabled
  - Includes complete Digi BSP source code
- Long-term product availability
- Additional Zigbee, 802.15.4, cellular and satellite connectivity options (off-module)

RELATED PRODUCTS


ConnectCore® 6


ConnectCore® for i.MX53


ConnectCore® 6 SBC


Digi XBee®


Development Kits

OVERVIEW	ConnectCard™ i.MX28 | ConnectCard™ Wi-i.MX28
PROCESSOR	
PROCESSOR MODELS	NXP® i.MX280, i.MX287
SPEED GRADE	Up to 454 MHz
CORE TYPE	ARM926EJ-S
CACHE MEMORY	16k I-Cache, 32k D-Cache
INTERNAL RAM	128 KB SRAM
INTERNAL ROM (OCOTP)	1,280 Bits
MEMORY	
FLASH	Up to 2 GB NAND flash
RAM	Up to 256 MB DDR2
DEBUG	
JTAG	Yes
ETM/ETB	Yes
POWER MANAGEMENT	
POWER MODES	Run, Standby, Deep Sleep
WAKE-UP EVENTS	RTC, GPIO, CAN, USB, Ethernet
AUTO SLOW	Yes
LI-ION BATTERY CHARGER / MONITOR	Yes
CLOCK AND WATCHDOG	
REAL-TIME CLOCK	Yes
ALARM	Yes
WATCHDOG	Yes
SECURITY	
DATA CO-PROCESSOR (DCP)	128-bit AES encryption; SHA-1 / SHA256 hashing
FUSEBOX (OCOTP)	1280 bits
HIGH-ASSURANCE BOOT (HAB4)	Yes
SECURE BOOT	128-bit AES decryption
PERIPHERALS	
UART	Up to 4 channels with bit rates up to 3.25 Mbps (AUART) Up to 1 channel with bit rate up to 115 kbps (DUART)
CAN BUS	Up to 2 channels, CAN Bus 2.0B, bit rates up to 1 Mbps, 64 message buffers (0-8 bytes), low-power modes with wake-up
SPI	Up to 2, master/slave modes
I2S	Up to 1
I2C	Up to 2 channels, master/slave (7-/10-bit addressing), standard (100 kbps) and fast (400 kbps) mode
SD/SDIO/MMC	Up to 4 ports, 1-/4-/8-bit modes, up to 48 MHz
USB 2.0 HIGH-SPEED	Up to 1 USB 2.0 High-Speed Host (with PHY) ; Up to 1 USB 2.0 OTG port (with PHY)
1-WIRE	Maxim DS2482-100+
PWM	Up to 4
ADC	HSADC: Up to 1 channel, up to 2 Mbps sample rate, 8-/10-/12-bit resolution LRADC: Up to 6 channels, 12-bit resolution
GPIO	Up to 128 GPIOs, selectable voltage (1.8/3.3V), interrupt capable

SPECIFICATIONS	ConnectCard™ i.MX28	ConnectCard™ Wi-i.MX28
DISPLAY		
RESOLUTION	800x480 (WVGA)	
REFRESH RATE	Up to 60 Hz	
COLOR DEPTH	8/16/24 bpp	
MODES	RGB/DOTCK/SYSTEM	
COLOR SPACE CONVERSION	Yes	
SCALING	Yes	
ROTATION	Yes	
TOUCH SCREEN		
TOUCH SCREEN CONTROLLER	4-/5-wire (LRADC)	
ETHERNET		
PHYSICAL LAYER	10/100Base-T	
DATA RATES	10/100 Mbps, auto-sensing	
DUPLEX MODE	Full or half duplex, auto-sensing	
IEEE 1588	Yes (i.MX287 only)	
POWER OVER ETHERNET (802.3AF)		
POWER OVER ETHERNET	Development board ready for 802.3af PoE application kit (sold separately)	
WI-FI[2]		
STANDARD	N/A	802.11a/b/g/n
ANTENNA CONNECTORS	N/A	2 x U.FL
DUAL DIVERSITY	N/A	Yes
FREQUENCY BANDS	N/A	2.412 - 2.484 GHz; 4.900 - 5.850 GHz
DATA RATES	N/A	802.11b: 1, 2, 5.5, 11 Mbps 802.11a/g: 6, 9, 12, 18, 24, 36, 48, 54 Mbps 802.11n: 15, 30, 45, 60, 90, 120, 135, 150 Mbps (HT40, MCS 0-7)
MODULATION	N/A	DBPSK, DQPSK, CCK, BPSK, QPSK, 16-QAM, 64-QAM
TRANSMIT POWER (±2 DBM)	N/A	802.11b: 17 dBm typical 802.11g/n: 15 dBm typical 802.11a/n: 12 dBm typical
SECURITY	N/A	WEP, WPA-PSK/WPA2-Personal, WPA/WPA2 Enterprise, 802.11i
WI-FI LOGO CERTIFICATION	N/A	Ready
CCXV4 ASD	N/A	Ready
BLUETOOTH[2]		
MODES	N/A	Bluetooth® 4.0 (Bluetooth 2.1 + EDR, Bluetooth 3.0 + HS 802.11 AMP, Bluetooth Low Energy)
CLASS	N/A	1.5
PROFILES	N/A	GAP, SPP, HSP, HFP, FTP, PAN, OPP, HID, A2DP, AVRCP, HDP
COEXISTENCE	N/A	Yes

SPECIFICATIONS	ConnectCard™ i.MX28	ConnectCard™ Wi-i.MX28
POWER REQUIREMENTS (USE-CASE ESTIMATES)		
WI-FI 2.4 GHZ TRANSMIT, CPU 454 MHZ @ 50%, UART ACTIVE	406 mA @ 5V	
WI-FI 2.4 GHZ RECEIVE, CPU IDLE (AUTO SLOW)	100 mA @ 5V	
WI-FI STANDBY (SLEEP), CPU STANDBY (IRQ)	8 mA @ 5V	
WI-FI STANDBY (HOST OFF), CPU DEEP SLEEP (RTC)	112 µA @ 5V	
MODULE VARIANTS[1]		
POPULATION OPTIONS	Processor models (i.MX280, i.MX281, i.MX283, i.MX285, i.MX286, i.MX287), flash, RAM, Single 10/100 Ethernet, dual 10/100 Ethernet w/1588, 802.11a/b/g/n Wi-Fi with Bluetooth® 4.0, 1-Wire, LCD connector, CAN bus	
MECHANICAL		
DIMENSIONS (L X W X H) W/O JTAG/LCD CONNECTOR	51 mm x 35 mm x 2.6 mm	51 mm x 35 mm x 3 mm
MATING CONNECTOR FOR MODULE	Molex, P/N 67910-5700; Tyco, P/N 2041119-x	
RETAINING CLIP FOR MODULE (OPTIONAL)	Molex, P/N 480995701; Tyco, P/N 1717832	
JTAG/LCD CONNECTOR ON MODULE (OPTIONAL)	FCI, P/N SFV31R-1STE1LF; Tyco, P/N 3-1734839-1	
ENVIRONMENTAL		
OPERATING TEMPERATURE	-40° C up to 85° C (-40° F to 185° F) Upper temperature ceilings may require active and/or passive thermal management such as lower clock speed, thermal pads, airflow, etc.	
STORAGE TEMPERATURE	-40° C up to 85° C (-40° F to 185° F)	
RELATIVE HUMIDITY	5% to 90% (non-condensing)	
APPROVALS AND CERTIFICATIONS		
EMISSIONS	FCC Part 15 Class B, EN 55022 Class B, EN 61000-3-2, EN 61000-3-3, ICES-003 Class B, VCCI Class II, AS 3548, FCC Part 15 Subpart C Section 15.247, IC (Industry Canada), RSS-210 Issue 5 Section 6.2.2(o), EN 300 328, EN 301 489-17	
IMMUNITY	EN 55024, EN 301 489-3	
SAFETY	UL/UR, or equivalent	
RADIO	US, Canada, EU, Japan, Australia/New Zealand	
TEMPERATURE	IEC 60068-2-1, IEC 60068-2-2, IEC 60068-2-78	
VIBRATION/SHOCK	IEC 60068-2-6, IEC 60068-2-64, IEC 60068-2-27	
DESIGN TEST	HALT	
WARRANTY		
PRODUCT WARRANTY	3 years	

1 All options available on development module. Production modules may require custom variants. Contact your local distributor or Digi sales office for details.
2 Transmit power and channel availability depending on regulatory requirements and corresponding module variants.

PRODUCT DIMENSIONS

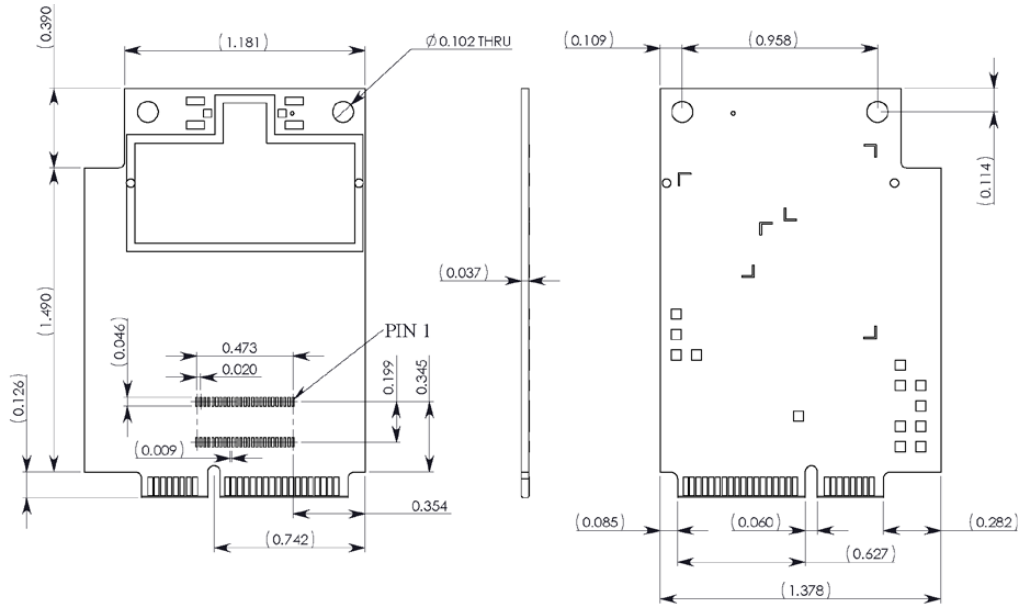

PART NUMBERS	DESCRIPTION
KITS	
CC-ACC-LCDW-70	7” WVGA LCD application kit w/resistive touch screen for ConnectCore for i.MX51/i.MX53 and ConnectCard for i.MX28 family
MODULES	
CC-WMX-PF47-VM	ConnectCard for i.MX28 module, i.MX287, 454 MHz, up to 85°C, 128 MB flash, 128 MB DDR2, 802.11abgn, Ethernet, LCD
CC-WMX-PF58-JT	ConnectCard for i.MX28 module, i.MX287, 454 MHz, up to 85°C, 256 MB flash, 256 MB DDR2, 802.11a/b/g/n, Bluetooth 4.0, dual Ethernet, LCD
CC-WMX-PF58-QK	ConnectCard for i.MX28 module, i.MX287, 454 MHz, up to 85°C, 256 MB flash, 256 MB DDR2, 802.11a/b/g/n, Bluetooth 4.0, dual Ethernet, LCD (International)
CC-MX-PF47-ZK	ConnectCore for i.MX28 module, i.MX287, 454 MHz, up to 85°C, 128 MB flash, 128 MB DDR2, dual Ethernet, LCD
CC-MX-PF58-ZK	ConnectCore for i.MX28 module, i.MX287, 454 MHz, up to 85°C, 256 MB flash, 256 MB DDR2, dual Ethernet, LCD

DIGI SERVICE AND SUPPORT / You can purchase with confidence knowing that Digi is always available to serve you with expert technical support and our industry leading warranty. For detailed information visit www.digi.com/support.

© 1996-2021 Digi International Inc. All rights reserved.
All trademarks are the property of their respective owners.

91001903
B9/321

DIGI INTERNATIONAL WORLDWIDE HQ
877-912-3444 / 952-912-3444 / www.digi.com

DIGI INTERNATIONAL GERMANY
+49-89-540-428-0

DIGI INTERNATIONAL JAPAN
+81-3-5428-0261 / www.digi-intl.co.jp

DIGI INTERNATIONAL SINGAPORE
+65-6213-5380

DIGI INTERNATIONAL CHINA
+86-21-50492199 / www.digi.com.cn