

Hardware Reference for:
Digi Connect® ME®
Digi Connect Wi-ME®
Digi Connect ME 9210
Digi Connect Wi-ME 9210

90000897_L

© 2014 Digi International Inc.

All rights reserved.

Digi, Digi International, the Digi logo, a Digi International Company, Digi Connect, Digi Connect ME, Digi Connect Wi-ME, ConnectCore, Digi JumpStart Kit, Net +, NET + OS, NS7520, and NS9210 are trademarks or registered trademarks of Digi International Inc. in the United States and other countries worldwide. All other trademarks are the property of their respective owners.

All other trademarks mentioned in this document are the property of their respective owners.

Information in this document is subject to change without notice and does not represent a commitment on the part of Digi International.

Digi provides this document “as is,” without warranty of any kind, either expressed or implied, including, but not limited to, the implied warranties of fitness or merchantability for a particular purpose. Digi may make improvements and/or changes in this manual or in the product(s) and/or the program(s) described in this manual at any time.

This product could include technical inaccuracies or typographical errors. Changes are periodically made to the information herein; these changes may be incorporated in new editions of the publication.

Contents

About This Document **7**
Related Documentation 7
Support Information 7

Chapter 1: About the Digi Connect ME Family of Embedded Modules **8**
Digi Connect ME and Wi-ME Embedded Modules 9
Types of Modules 10
Connectors: Power and Device Interface 12
Connectors: Module JTAG Interface 14
Connectors: Ethernet Interface 16
JTAG Jumper 17
Hard Reset 17
Connectors: Antenna 18
Module LEDs 19

Chapter 2: About the Development Board **20**
Basic Description 21
Port Descriptions 25
Primary Serial Port, P1 25
Secondary Serial Port, P2 26
RS232-Enable Pin Header, P5 26
GPIO Port, P7 27
Connectors and Blocks 28
Embedded Module Connector, P10 28
Module JTAG Interface Connector, P11 31
JTAG Debugger Connector, P12 33
Logic Analyzer Header, P3 34
Switches and Push Buttons 35
GPIO Switch Bank 1, SW3 35
User Push Button 1, SW1 35
User Push Button 2, SW2 35
Reset, SW4 36
Power On/Off Switch, SW5 36
Development Board LEDs 37
Power Jack P15 39
Test Points 40

Chapter 3: Programming Considerations 41
Module Pinout 42
Where to Find More Information on Pin Configurations 42
Module Pinout 42
Module JTAG Interface Pinout 44
LEDs 45
Reset - Hard Reset 45
Memory 46
Flash 46
SDRAM 46
Appendix A: Module Specifications 47
Network Interface 47
Serial Interface 48
Data Rates (bps) 48
Flow Control Options 48
DC Characteristics 49
Power Management (Digi Connect ME 9210 only) 51
Thermal Specifications 52
Additional Design Recommendations 53
Mechanical Specifications 53
Bar Code 53
Dimensions 54
Digi Connect ME Module 58
Recommended PCB Layout 61
Antenna Information 63
Antenna Strength 63
RF Exposure Statement 65
Safety Statements 66
Appendix B: Certifications 67
FCC Part 15 Class B 67
Radio Frequency Interference (RFI) (FCC 15.105) 67
Labeling Requirements (FCC 15.19) 67
Modifications (FCC 15.21) 68
Industry Canada 68
Declaration of Conformity 69
Digi Connect ME and Digi Connect Wi-ME Conformity 69
Digi Connect ME 9210 Conformity 70
International EMC Standards 71
Antenna configurations 72

Appendix C: Sample Application: PoE Power Supply 73
2/8 Digi Connect ME 74
4/8 Digi Connect ME modules and Digi Connect ME 9210 modules 75
Appendix D: Sample Application: TTL Signals to EIA-232 76
Appendix E: Change Log 78
Revision L 78
Revision K 78
Revision J 79
Revision I 79
Revision H 79
Revision G 79
Revision F 79
Revision E 80
Revision D 80
Revision C 80
Revision B 80
Revision 90000631_G>90000897_A 80
Revision G 81
Revision F 81
Revision E 81

About This Document

Scope of the Reference Manual

The purpose of this document is to enable developers to integrate the Digi Connect ME, Digi Connect ME 9210, or Digi Connect Wi-ME embedded modules with other devices, enabling these devices to make use of the module's rich networking features.

Unless mentioned specifically by name, the products will be referred to as the *embedded modules* or *modules*. Individual naming is used to differentiate product specific features.

Unless noted otherwise, all Digi Connect ME related technical information provided in this document also applies to the Digi Connect ME 9210 module.

Related Documentation

See the *NS7520 Hardware Reference* for information on the NS7520 chip.

See the *NS9210 Hardware Reference* for information on the NS9210 chip.

See the *Digi Connect Wi-ME 9210 Hardware Reference*.

Support Information

To get help with a question or technical problem or make comments and recommendations about Digi products and documentation, use the following contact information

General	Customer Service and Support
Digi International	United States: 1 877-912-3444
11001 Bren Road East	Other Locations: 1 952-912-3444
Minnetonka, MN 55343	www.digiembedded.com
U.S.A.	www.digi.com/support
	www.digi.com/support/eservice

About the Digi Connect ME Family of Embedded Modules

CHAPTER 1

This chapter provides information about the modules hardware and contains the following topics:

- An overview of the Digi Connect ME family of embedded modules
- "Types of Modules" on page 10
- "Connectors: Antenna" on page 18
- "Connectors: Ethernet Interface" on page 16
- "Module LEDs" on page 19

Digi Connect ME and Wi-ME Embedded Modules

Embedded modules provide fully transparent device connectivity over industry-standard Ethernet connections and allow both equipment manufacturers and systems integrators to network-enable products at a fraction of the time and cost required to develop a custom solution. They provide a highly flexible and compact single component solution with a serial port, GPIO, and a robust on-board TCP/IP stack and 10/100 BASE-T Ethernet support or wireless interface. From medical systems to building control and industrial automation, in virtually any application where embedded device connectivity over Ethernet or wireless connectivity is needed, embedded modules are the ideal choice, delivering high-performance functionality.

Built on Digi's leading 32-bit NET+ARM processor technology, the Digi Connect ME family of embedded modules offer serial-to-Ethernet functionality through Digi’s Plug-and-Play Firmware firmware, or the freedom and flexibility of professional embedded software development provided by the easy-to-use, cost-effective and complete Digi JumpStart Kits™ for NET+OS and Microsoft.NET Micro Framework.

Digi Connect ME and Digi Connect Wi-ME modules use the powerful Digi NS7520 processor with an ARM7TDMI core running at 55 MHz. They provide integrated wired or wireless networking and serial device connectivity in a compact connector-style form factor. The Digi Connect ME 9210 module is the latest, fully form factor and pin compatible, members of the Digi Connect ME family providing 75 MHz ARM9 core performance based on the Digi NS9210 processor. In addition to higher performance with integrated Ethernet connectivity, the Digi Connect ME 9210 offers higher serial data rates, SPI functionality, and the unique option of application-specific interfaces using the programmable FIMs on the NS9210.

Note: Unless mentioned specifically by name, products are referred to as the **embedded modules** or **modules**. Individual naming is used to differentiate product specific features. Similarly, information about the Digi Connect ME applies to the Digi Connect ME 9210.

Types of Modules

There are two types of modules. One module utilizes Digi Plug-and-Play Firmware, while the second is customizable with the option to develop a firmware application in.NET MF or NET+OS. If you are developing your firmware application in NET+OS, you will be using a module with a JTAG interface.

Note: **JTAG** is a commonly used term that is also referred to as **IEEE 1149.1**, an industry standard test protocol. JTAG is an abbreviation for the European Joint Test Action Group, which invented the first versions of the IEEE 1149.1 interface. The JTAG interface, along with the other development tools, enables you to download, run and debug programs on the module.

The following figures show the two types of modules.

Digi Connect ME Modules		
Model	**Description**	**Figure**
Digi Connect ME DC-ME-01T-JT DC-ME4-01T-JT **Digi Connect ME 9210** DC-ME-Y401-JT DC-ME-Y402-JT DC-ME-Y402-LX-JT	■ Used for development purposes only ■ JTAG interface	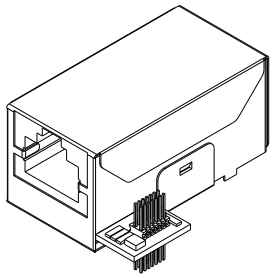
Digi Connect ME DC-ME-01T-S DC-ME4-01T-S DC-ME-01T-C DC-ME4-01T-C DC-ME-01T-CLI DC-ME4-01T-CLI DC-ME-01T-MF DC-ME-01T-PC DC-ME-01T-PS Digi **Digi Connect ME 9210** DC-ME-Y401-C DC-ME-Y402-C DC-ME-Y402-LX	■ No JTAG interface ■ Ordered independently for use in your implementation	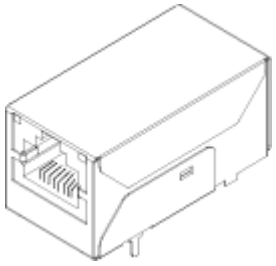

Notes:

- DC-ME-01T-CLI (2/8 CLI version - has the CLI enabled by default on the serial port)
- DC-ME4-01T-CLI (4/8 CLI version - has the CLI enabled by default on the serial port)
- DC-ME-01T-PC (2/8 802.3af compliant -C module)
- DC-ME-01T-PS (2/8 802.3af compliant -S module)
- DC-ME-Y402-LX (Digi Connect ME 9210 4/8 Linux - production)
- DC-ME-Y402-LX-JT (Digi Connect ME 9210 4/8 Linux JTAG - dev only)

Digi Connect Wi-ME Modules		
Model	**Description**	**Figure**
Digi Connect Wi-ME DC-WME-01T-JT	■ Used for development purposes only ■ JTAG interface	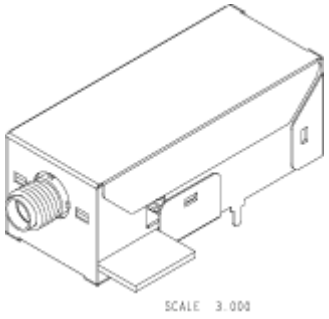
Digi Connect Wi-ME DC-WME-01T-S DC-WME-01T-C	■ No JTAG interface ■ Ordered independently for use in your implementation.	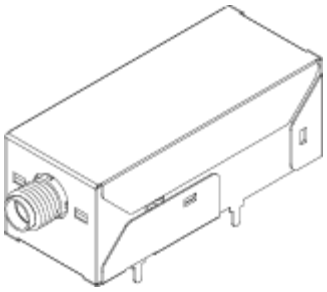

Notes:

- **S**: No JTAG for use with Digi Plug-and-Play Firmware
- **C**: No JTAG for use with custom NET+OS applications
- **JT**: With JTAG for use with custom firmware development
- **MF:** No JTAG for use with Microsoft.NET Micro Framework

Connectors: Power and Device Interface

The module has a 20-pin male connector that supports a serial interface with data rates up to 230,400 (Digi Connect ME and Digi Connect Wi-ME)/ 921,600 bps (Digi Connect ME 9210) and full-modem control, and GPIO ports. See the following figure for pin orientation and the table for pin assignments.

Difference in pin assignments/availability

Pin assignments/availability for pins 1 and 2 depend on which module you are using. Pins 1 through 6 are available for Digi Connect ME; these pins are removed for Digi Connect Wi-ME. The pin assignment table shows the appropriate values.

Power and Device Interface Connector

Viewed from bottom of the module:

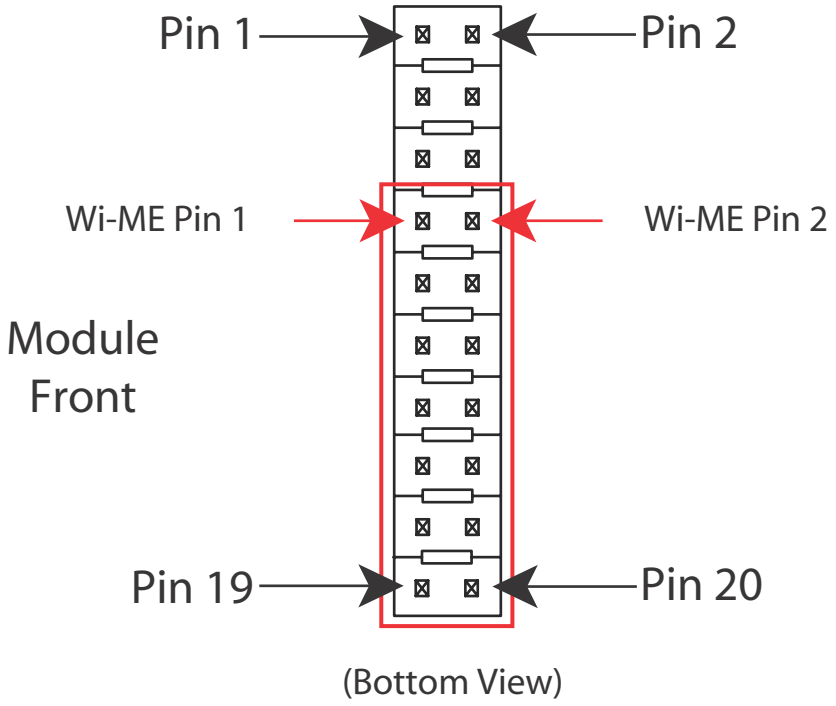

Power and Device Interface Connector Pin Assignments				
Signal				**Description**
ME		**Wi-ME**		
Pin #	**Function**	**Pin #**	**Function**	
1	VETH+		—	ME: Power Pass-Thru+ Wi-ME: Position Removed
2	VETH-		—	ME: Power Pass-Thru- Wi-ME: Position removed
3-6	—		—	Position removed
7	RXD	1	RXD	Receive Data (Input)
8	TXD	2	TXD	Transmit Data (Output)
9	RTS	3	RTS	Request to Send (Output)
10	DTR	4	DTR	Data Terminal Ready (Output)
11	CTS	5	CTS	Clear to Send (Input)
12	DSR	6	DSR	Data Set Ready (Input)
13	DCD	7	DCD	Data Carrier Detect (Input)
14	/RESET	8	/RESET	Reset
15	+3.3V	9	+3.3V	Power
16	GND	10	GND	Ground
17, 18		11, 12	—	Not accessible with Digi Plug-and-Play Firmware. If using a development kit, see "Module Pinout" on page 42 for detailed IO configuration information.
19	—	13	—	Reserved. Do not connect.
20	/INIT	14	/INIT	Software Reset

Notes:

- The development board provides connectors for an optional PoE application kit.
- Any pins not used can be left floating.
- See "Module Pinout" on page 42 for detailed IO configuration information.

Connectors: Module JTAG Interface

The Module's JTAG Interface Connector is a 14-pin female vertical header that is labeled P11 on the development board. The connector mates with the JTAG connector on the embedded module. The Module's JTAG Connector pins are tied to the debugger connector (see "JTAG Debugger Connector, P12").

JTAG Interface Connectors

Since the modules' JTAG connectors are mounted on the bottom side of the modules, the pin 1 location is mirrored from that of the Development board's mating JTAG connector (P11). The resulting pin mapping is indicated in the Module JTAG Interface Connector Pin Assignments table below.

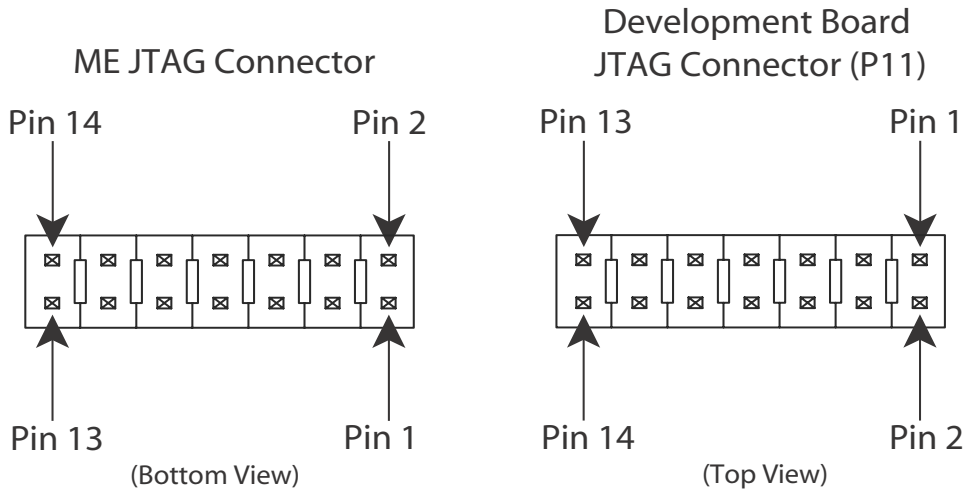

Bottom side of module (left) and development board from top (right)

Module JTAG Interface Connector Pin Assignments		
JTAG Signal	**ME JTAG pin #**	**JTAG Connector (P11) pin #**
+3.3V	1	2
GND	2	1
TRST#	3	4
GND	4	3
TDI	5	6
GND	6	5
TMS	7	8
GND	8	7
TCK	9	10
RXD	10	9
TDO	11	12
SRST	12	11
+3.3V	13	14
TXD	14	13

Connectors: Ethernet Interface

The Ethernet connector is an 8-wire RJ-45 jack that meets the ISO 8877 requirements for 10/100BASE-T. See the following figure and table for pin orientation and pin assignments.

Note: Pin orientation and assignments are the same for modules with or without a JTAG connector.

Ethernet Interface Pin Orientation

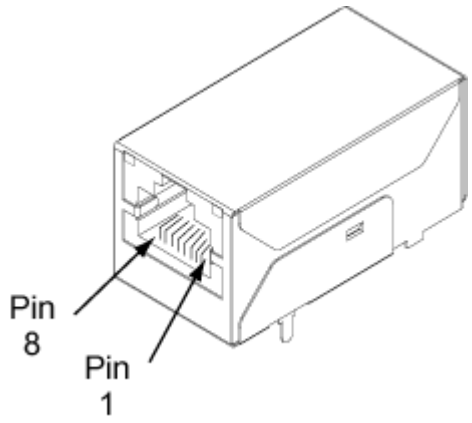

Ethernet Interface Pin Assignments							
Pin 1	**Pin 2**	**Pin 3**	**Pin 4**	**Pin 5**	**Pin 6**	**Pin 7**	**Pin 8**
TXD+	TXD-	RXD+	EPWR+	EPWR+	RXD-	EPWR-	EPWR-
Transmit Data +	Transmit Data -	Receive Data +	Power from Switch +	Power from Switch +	Receive Data -	Power from Switch -	Power from Switch -

JTAG Jumper

The J1 controls the way in which the Digi Connect ME 9210 JTAG device responds to pin 14 being pulled low.

Jumper	Result
None	No reset
1-2	Hard reset
2-3	Soft reset

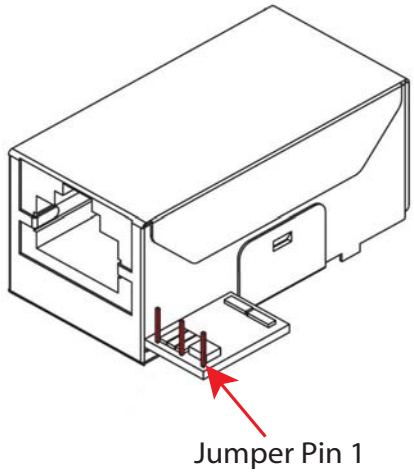

Hard Reset

The embedded modules support a hardware reset on pin 14 of the 20-pin header. Pulling pin 14 low with an open drain driver will force the module into a hard reset state. The module will remain in the reset state as long and pin 14 is held low and will leave this reset state ~250mS after pin 14 goes high. Do not actively drive pin 14 high and do not allow the rise time of the pin 14 to be longer than 100uS. When used with the development board, this pin is wired to reset button SW4, which means it acts as a hard reset button.

Connectors: Antenna

The Digi Connect Wi-ME is available with 1 RP-SMA connector. The antenna is connected to the module with a reverse polarity SMA connector (sub-miniature size A). The antenna only fits on the module one way to ensure a proper connection. Another option for both signal reception and design flexibility is to use an antenna extension cord to separate the antenna from the module. This allows the module to fit inside your product but the antenna to be placed outside the device.



Caution This Part 15 radio device operates on a non-interference basis with other devices operating at this frequency when using the antennae listed in the Antenna Specification table. Any changes or modification to the product not expressly approved by Digi International could void the user's authority to operate the device.

Antenna Specifications			
Type	Desktop	Dipole	30 cm Antenna Extension Cord
Part number	DC-ANT-24DT	DG-ANT-20DP-BG	DG-EXT-300-RR
Gain	1.8 dBi	2 dBi	-.5dB

Module LEDs

The module has two LEDs that are located near the upper corners of the Ethernet port (see the following figure). The following table describes the LEDs.

Note: The LEDs are the same for a module with or without a JTAG connector.

LED Locations

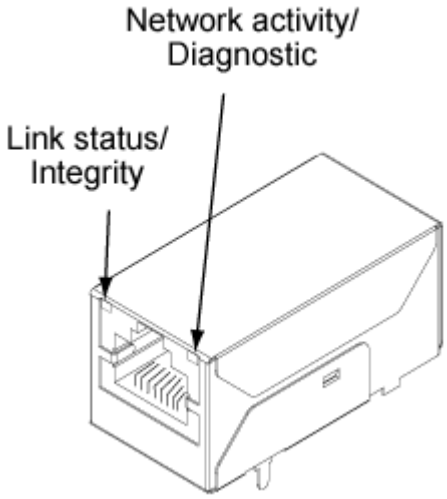

LED Behaviors			
LED	**Digi Plug and Play Firmware Digi Connect ME**	**Digi Plug and Play Firmware Digi Connect Wi-ME**	**Customizable Modules**
Top left (yellow)	Network link status: Off - no link has been detected. On - a link has been detected.	Network link status: ■ On - unit is associated with an access point. ■ Blinking slowly - unit is in ad hoc mode. ■ Blinking quickly - unit is scanning for a network.	Same as Digi Plug-and Play Firmware (Network link status).
Top right (green)	Network activity: Blinking -network data is transmitted or received.		This LED is software programmable.

About the Development Board

CHAPTER 2

The development board is a hardware platform from which you can determine how to integrate the embedded modules into your design. The board consists of the following main features:

- Socket for connecting the embedded modules
- JTAG connection (for use with the development kit only)
- GPIO switches
- Serial and GPIO ports
- Power input

This chapter provides information on development board components and contains the topics listed below. For more detailed information on the development board, see the schematic and mechanical drawings on the CD that accompanies your kit. Once you've installed the software that comes with your kit, you can access the schematic from the Start menu.

- "Basic Description" on page 21
- "Placement of Module" on page 24
- "Connectors and Blocks" on page 28
- "Switches and Push Buttons" on page 35
- "Development Board LEDs" on page 37
- "Power Jack P15" on page 39
- "Test Points" on page 40

Basic Description

The development board contains connectors, switches, and LEDs for use while integrating the embedded module into your design. See the following figure for the location of the connectors, switches, and LEDs. Additionally, the board provides test points (not shown on the figure). For more information about test points, see "Test Points" on page 40.

Board Layout and Connector Locations:

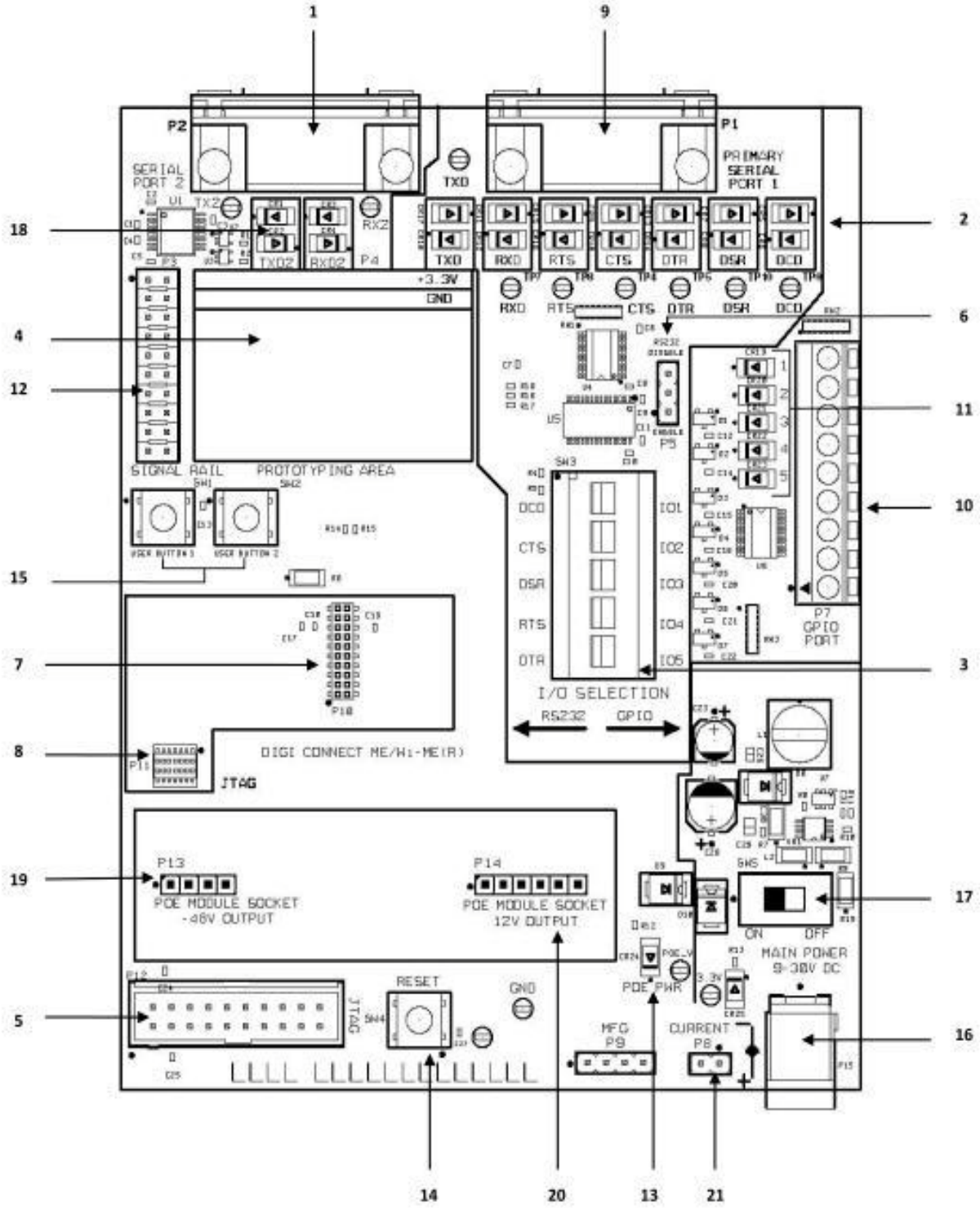

Connectors, Switches and LEDs Board Description Markers 1-5				
1	**2**	**3**	**4**	**5**
Secondary Serial Port, P2	Primary Port LEDs, CR5 - CR18	GPIO Switch Bank, SW3	Prototyping Area, P4	JTAG Header, P12

Connectors, Switches and LEDs Board Description (continued) Markers 6-10				
6	**7**	**8**	**9**	**10**
232 Enable Jumper Block, P5	Embedded Module Connector, P10	JTAG Connector, P11	Primary Serial Port, P1	GPIO Port, P7

Connectors, Switches and LEDs Board Description (continued) Markers 11-15				
11	**12**	**13**	**14**	**15**
Digital I/O LEDs, CR19 - CR23	Logic Analyzer header, P3	POE Source LED, CR24	Reset Switch, SW4	User Pushbuttons, SW1 & SW2

Connectors, Switches and LEDs Board Description (continued) Markers 16-21					
16	**17**	**18**	**19**	**20**	**21**
Power Jack, P15	On/Off switch, SW5	Secondary Port LEDs CR1-CR4	-48V DC output from module P13	12V output from PoE module P14	Current Measurement Option P8

- "Port Descriptions" on page 25
- "Connectors and Blocks" on page 28
- "Switches and Push Buttons" on page 35
- "Development Board LEDs" on page 37
- "Power Jack P15" on page 39

See the following figures for placement of either module onto the development board.

Placement of Module

Caution: When handling the development board, wear a grounding wrist strap to avoid ESD damage to the board.

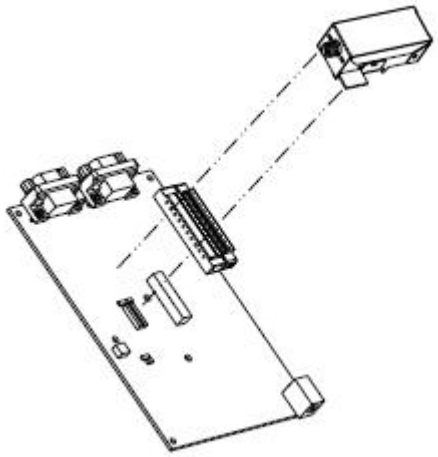

Port Descriptions

The development board provides the following ports:

- Primary Serial Port, P1
- Secondary Serial Port, P2
- GPIO Port, P7

See the figure titled "Board Layout and Connector Locations:" on page 22 for the location of the ports. The following sections describe the ports.

Primary Serial Port, P1

The Primary Serial Port is a DB-9 male connector that is labeled as P1 on the development board. See the following figure for pin orientation; see the following table for pin assignments.

Primary Serial Port Pin Orientation

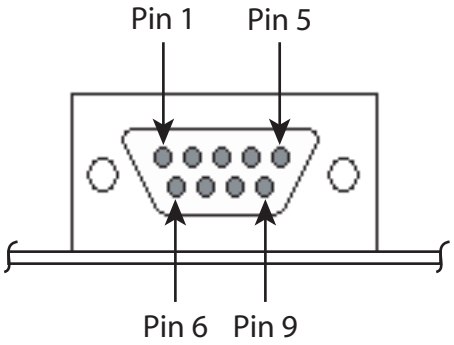

Primary Serial Port Pin Assignments								
Pin 1	**Pin 2**	**Pin 3**	**Pin 4**	**Pin 5**	**Pin 6**	**Pin 7**	**Pin 8**	**Pin 9**
DCD	RXD	TXD	DTR	GND	DSR	RTS	CTS	—
Data Carrier Detect	Receive Data	Transmit Data	Data Terminal Ready	Signal/ Chassis Ground	Data Set Ready	Request To Send	Clear To Send	—

Secondary Serial Port, P2

The Secondary Serial Port is a DB-9 male connector that is labeled as P2 on the development board. The port is used only with the Digi Connect ME modules with JTAG interfaces for debugging purposes. See the following figure for pin orientation; see the following table for pin assignments.

Secondary Serial Port Pin Orientation

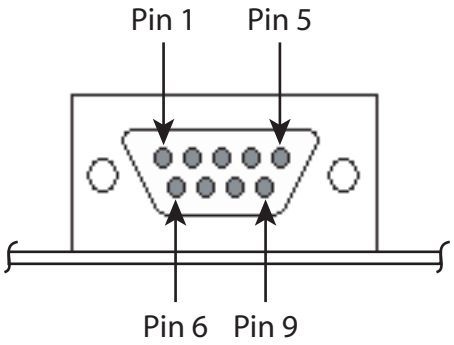

Secondary Serial Port Pin Assignments								
Pin 1	**Pin 2**	**Pin 3**	**Pin 4**	**Pin 5**	**Pin 6**	**Pin 7**	**Pin 8**	**Pin 9**
—	RXD	TXD	—	GND	—	—	—	—
—	Receive Data	Transmit Data	—	Signal/ Chassis Ground	—	—	—	—

RS232-Enable Pin Header, P5

P5 is used to enable or disable serial port RS232s transceiver. Shorting P5 pins 1 and 2 will enable the RS232 transceiver. Shorting P5 pins 2 and 3 will disable the RS232 transceiver.

GPIO Port, P7

The GPIO port is a 9-pin male right-angle connector that is labeled as P7 on the development board. See the following figure for pin orientation; see the following tables for pin assignments. For input and output threshold specifications, see "DC Characteristics" on page 49. Note that each signal has a 220 ohm series resistor between the P7 pin and the module (except GND).

Note: The development board is shipped with a 9-pin screw-flange plug attached to the GPIO port.

GPIO Port Pin Orientation

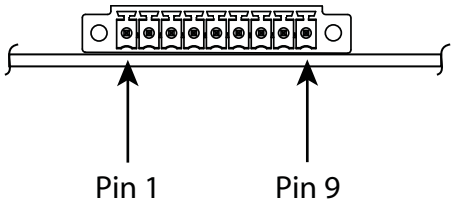

GPIO Port Pin Assignments

	Pin 1	Pin 2	Pin 3	Pin 4	Pin 5	Pin 6	Pin 7	Pin 8	Pin 9
Signal	GPIO-1	GND	GPIO-2	GND	GPIO-3	TXD_TTL	GPIO-4	RXD_TTL	GPIO-5

Connectors and Blocks

The development board provides the following connectors and blocks:

- Embedded Module Connector, P10
- The Digi Connect Wi-ME module does not provide pins 1-6.
- JTAG Debugger Connector, P12.
- -48V DC input to PoE module (Digi Connect ME must be connected to a Powering Device for this feature.), P13
- 12V DC output from PoE module into Dev Board Power Supply, P14
- Logic Analyzer Header, P3

See the figure titled "Board Layout and Connector Locations:" on page 22 for the location of the connectors and blocks. The following sections describe the connectors and blocks.

Embedded Module Connector, P10

The Digi Connect ME embedded module Connector is a 20-pin female vertical header that is labeled P10 on the development board. See the following figure for pin orientation; see the following table for pin assignments.

Note: The figure shows the connector using the same orientation as shown in the figure titled "Board Layout and Connector Locations:" on page 22.

Embedded Module Connector Pin Orientation

Note that the Digi Connect Wi-ME module does not provide pins 1-6. The GPIO pin numbers mentioned below are used to reference **the silkscreen label on the development board**, not the actual GPIO number of the Digi Connect Module. See "Module Pinout" on page 42 for detailed IO configuration information.

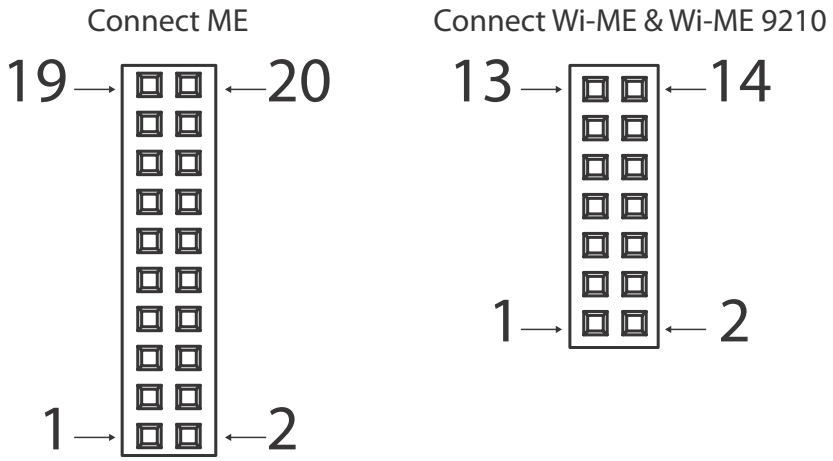

Power and Device Interface Connector Pin Assignments				
Signal				**Description**
ME		**Wi-ME**		
Pin #	**Function**	**Pin #**	**Function**	
1	VETH+		—	ME: Power Pass-Thru+ Wi-ME: Position Removed
2	VETH-		—	ME: Power Pass-Thru- Wi-ME: Position removed
3-6	—		—	Position removed
7	RXD	1	RXD	Receive Data (Input)
8	TXD	2	TXD	Transmit Data (Output)
9	RTS	3	RTS	Request to Send (Output)
10	DTR	4	DTR	Data Terminal Ready (Output)
11	CTS	5	CTS	Clear to Send (Input)
12	DSR	6	DSR	Data Set Ready (Input)
13	DCD	7	DCD	Data Carrier Detect (Input)
14	/RESET	8	/RESET	Reset
15	+3.3V	9	+3.3V	Power
16	GND	10	GND	Ground

Power and Device Interface Connector Pin Assignments				
Signal				Description
ME		Wi-ME		
Pin #	Function	Pin #	Function	
17, 18		11, 12	—	Not accessible with Digi Plug-and-Play Firmware. If using a development kit, see "Module Pinout" on page 42 for detailed IO configuration information.
19	—	13	—	Reserved. Do not connect.
20	/INIT	14	/INIT	Software Reset

Module JTAG Interface Connector, P11

The Module’s JTAG Interface Connector is a 14-pin female vertical header that is labeled P11 on the development board. The connector mates with the JTAG connector on the embedded module. The Module’s JTAG Connector pins are tied to the debugger connector (see “JTAG Debugger Connector, P12”).

Since the modules' JTAG connectors are mounted on the bottom side of the modules, the pin 1 location is mirrored from that of the Development board's mating JTAG connector (P11). The resulting pin mapping is indicated in the Module JTAG Interface Connector Pin Assignments table below.

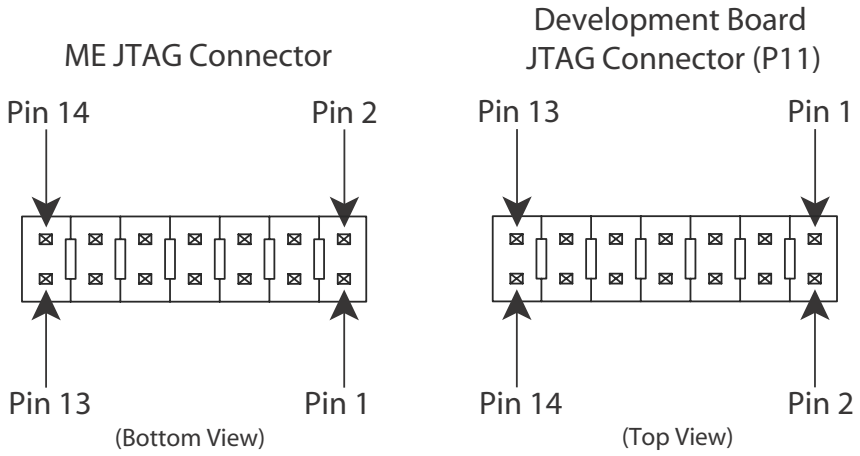

Bottom side of module (left) and development board from top (right)

Module JTAG Interface Connector Pin Assignments		
JTAG Signal	**ME JTAG pin #**	**JTAG Connector (P11) pin #**
+3.3V	1	2
GND	2	1
TRST#	3	4
GND	4	3
TDI	5	6
GND	6	5
TMS	7	8
GND	8	7
TCK	9	10
RXD	10	9
TDO	11	12
SRST	12	11
+3.3V	13	14
TXD	14	13

JTAG Debugger Connector, P12

The JTAG debugger connector is a 20-pin male vertical header that is labeled P12 on the development board. The connector mates with a JTAG debugger plug (for example, a Digi JTAG Link). The connector is used with the development kit only. See the following figure for pin orientation. See the following table for pin assignments.

Note: The figure shows the connector using the same orientation as shown in the figure titled "Board Layout and Connector Locations:" on page 22.

JTAG Debugger Connector Pin Orientation

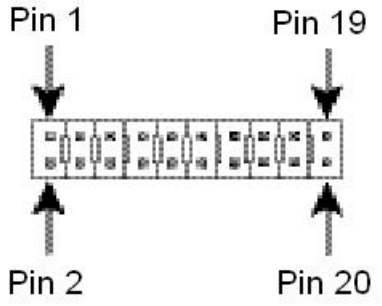

JTAG Debugger Connector Pin Assignments									
Pin 1	**Pin 2**	**Pin 3**	**Pin 4**	**Pin 5**	**Pin 6**	**Pin 7**	**Pin 8**	**Pin 9**	**Pin 10**
VCC+	VCC+	/TRST	GND	TDI	GND	TMS	GND	TCK	GND
Pin 11	**Pin 12**	**Pin 13**	**Pin 14**	**Pin 15**	**Pin 16**	**Pin 17**	**Pin 18**	**Pin 19**	**Pin 20**
RTCK	GNO	TDO	GND	/SRST	GNO	N/A	GND	N/A	GND

Note: Pin assignments are shown for the connector on the development board.

Logic Analyzer Header, P3

The Logic Analyzer Header is a 20-pin male vertical header that is labeled P3 on the development board. The header is for connecting a digital signal analyzer (for example, a logic analyzer) to the development board. See the following figure for pin orientation; see the following table for pin assignments.

Note: The figure shows the connector using the same orientation as shown in the figure titled "Board Layout and Connector Locations:" on page 22.

Logic Analyzer Header Pin Orientation

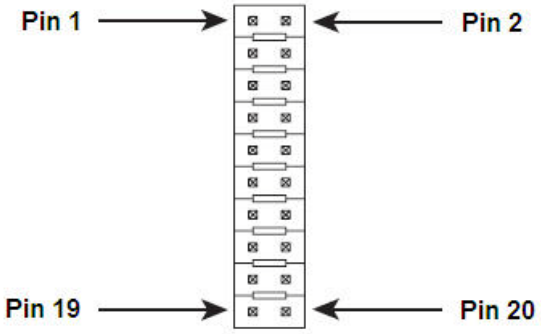

Logic Analyzer Header Pin Assignments									
Pin 1	**Pin 2**	**Pin 3**	**Pin 4**	**Pin 5**	**Pin 6**	**Pin 7**	**Pin 8**	**Pin 9**	**Pin 10**
V_Ether+	V_Ether-	Not connected	Not connected	Not connected	Not connected	RXD	TXD	GPIO-4	GPIO-5
Pin 11	**Pin 12**	**Pin 13**	**Pin 14**	**Pin 15**	**Pin 16**	**Pin 17**	**Pin 18**	**Pin 19**	**Pin 20**
GPIO-2	GPIO-3	GPIO-1	/RST	3.3v	GND	See "Power and Device Interface Connector Pin Assignments" on page 13 for details.		Reserved	/INIT

Switches and Push Buttons

The development board provides the following switches:

- User PB1
- User PB2
- GPIO Switch Bank 1, SW3
- Reset, SW4
- Power On/Off SW5

See the figure titled "Board Layout and Connector Locations:" on page 22 for the location of the switches. The following sections describe the switches.

GPIO Switch Bank 1, SW3

GPIO Switch Bank 1, labeled SW3, is a set of five slide switches that allows the embedded module to use either serial signals or GPIO signals to communicate with a device. With the switch to the left position, the module's signal is connected to the Serial Port1 RS232 transceiver. In the right position, the module signal is connected to the appropriate pin of the GPIO Port P7.

GPIO Switch Bank 1 Settings

Switch Number	Left Position 	Right Position 
1	DCD	GPIO-1
2	CTS	GPIO-2
3	DSR	GPIO-3
4	RTS	GPIO-4
5	DTR	GPIO-5

User Push Button 1, SW1

When switch number 1 is set to GPIO-1, pushing User Push Button 1, SW1, will drive GPIO-1 (module pin 13) low.

User Push Button 2, SW2

Pushing User Push Button 2, SW2, will drive module pin 18 low.

Reset, SW4

The Reset switch is a push button switch labeled SW4 on the development board. Pressing the switch holds the embedded module in reset. When the push button is released, the module reboots.

Power On/Off Switch, SW5

The left position means that power is on. The right position means that power is off.

Development Board LEDs

The development board contains 25 LEDs that are labeled CR1 through CR25. The following table lists and describes the LEDs.

Development Board LED Descriptions

Board Label	Description	State	Indication
CR1	TXD, Secondary Serial Port Yellow	On	Logic 1 on TTL, mark, -V on line side
CR2	TXD, Secondary Serial Port Yellow	On	Logic 1 on TTL, mark, -V on line side
CR3	RXD, Secondary Serial Port Yellow	On	Logic 1 on TTL, mark, -V on line side
CR4	RXD, Secondary Serial Port Green	On	Logic 0 on TTL, space, +V on line side
CR5	DCD, Primary Serial Port Yellow	On	Logic 1 on TTL, mark, -V on line side
CR6	DCD, Primary Serial Port Green	On	Logic 0 on TTL, space, +V on line side
CR7	DSR, Primary Serial Port Yellow	On	Logic 1 on TTL, mark, -V on line side
CR8	DSR, Primary Serial Port Green	On	Logic 0 on TTL, space, +V on line side
CR9	CTS, Primary Serial Port Yellow	On	Logic 1 on TTL, mark, -V on line side
CR10	CTS, Primary Serial Port Green	On	Logic 0 on TTL, space, +V on line side
CR11	RXD, Primary Serial Port	On	Logic 1 on TTL, mark, -V on line side
CR12	RXD, Primary Serial Port	On	Logic 1 on TTL, mark, -V on line side
CR13	DTR, Primary Serial Port Yellow	On	Logic 1 on TTL, mark, -V on line side
CR14	DTR, Primary Serial Port Green	On	Logic 0 on TTL, space, +V on line side
CR15	RTS, Primary Serial Port Yellow	On	Logic 1 on TTL, mark, -V on line side
CR16	RTS, Primary Serial Port Green	On	Logic 0 on TTL, space, +V on line side
CR17	TXD, Primary Serial Port Yellow	On	Logic 1 on TTL, mark, -V on line side
CR18	TXD, Primary Serial Port Green	On	Logic 0 on TTL, space, +V on line side

Development Board LED Descriptions			
Board Label	**Description**	**State**	**Indication**
CR19	GPIO 1 Green	On	Logic 1
		Off	Logic 0
CR20	GPIO 2Green	On	Logic 1
		Off	Logic 0
CR21	GPIO 3Green	On	Logic 1
		Off	Logic 0
CR22	GPIO 4Green	On	Logic 1
		Off	Logic 0
CR23	GPIO 5Green	On	Logic 1
		Off	Logic 0
CR24	POE Active LED Green	On	+12V present from POE
		Off	No POE present
CR25	3.3V LED Green	On	Power On
		Off	Power Off

Power Jack P15

The Power Jack P15 is a barrel connector that accepts 9 to 30 VDC +/- 5%. The following table shows the polarity of the power jack.

Power Jack Polarity	
Contact	**Polarity**
Center	+9 to +30 VDC
Outer	Ground

The following figure schematically represents the polarity of the power jack.

Power Jack Polarity, Schematic

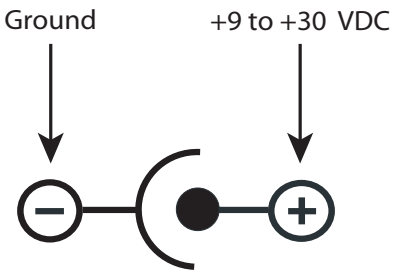

Test Points

The development board provides 13 test points that can be identified by a board label. The test point numbers are in the development board schematic drawings. The following table lists the test point number, board label, and a brief description of each test point.

Test Point Descriptions

Test Point	Board Label	Description
TP2	TXD	TXD-2, Transmit, Secondary Serial Port
TP3	RXD	RXD-2, Receive, Secondary Serial Port
TP4	CTS	CTS, Primary Serial Port
TP5	DTR	DTR, Primary Serial Port
TP6	TXD	TXD, Primary Serial Port
TP7	RXD	RXD, Primary Serial Port
TP8	RTS	RTS, Primary Serial Port
TP9	DCD	DCD, Primary Serial Port
TP10	DSR	DSR, Primary Serial Port
TP12	Reset	Reset
TP13	POE 12v	POE 12v
TP14	3.3v	3.3v Supply
TP15	GND	Ground

Programming Considerations

CHAPTER 3

This chapter provides information programmers may require to make use of some embedded module hardware resources. It provides programming information on the following topics for the Digi Connect ME, the Digi Connect ME 9210, and the Digi Connect Wi-ME:

- "Module Pinout" on page 42
- "LEDs" on page 45
- "Reset - Hard Reset" on page 45
- "Memory" on page 46
- "SDRAM" on page 46

Module Pinout

Where to Find More Information on Pin Configurations

The NS7520/NS9210 processors support 16 General Purpose I/O (GPIO) lines, some of which are reserved for specific functions and some of which can be customized. For Digi Plug and Play Firmware users, see the *Digi Connect Family Users Guide* for details on what Pin configurations are available to you.

Module Pinout

The following table provides signal header pinout information for the Digi Connect ME, Digi Connect ME 9210, and Digi Connect Wi-ME modules. Please refer to the color key below.

Table Notes:

- The CAN Bus interface is available on the 8/16 Digi Connect ME 9210, Wi-ME 9210 variants.
- When using the 8/16 ME 9210/ Wi-ME 9210 CAN Bus, the DTR (9210 signal GPIO 6) line must be tri-stated. When the DTR signal (9210 GPO/I 6) is used, 9210 GPO/I 15 must be tri-stated. These two 9210 signals are wired together on the 9210 modules.
- The Digi Connect Wi-ME 9210 module does not provide pins 1-6.
  When using I2C, make sure to put a 10k pull up on the SDA and SCL lines.

Applies to Digi Connect ME/Wi-ME modules.
Applies to Digi Connect ME 9210/Wi-ME 9210 modules.
Applies to Digi Connect ME/Wi-ME and ME 9210/Wi-ME 9210 modules.

Pin		UART [All]	GPIO [ME/ Wi-ME]	GPIO [ME 9210]	Ext IRQ [ME/ Wi-ME]	Ext IRQ [ME 9210/ Wi-ME 9210]	I2C [ME 9210/ Wi-ME 9210]	SPI [ME 9210/ Wi-ME 9210]	FIM [ME 9210/Wi-ME 9210]	CAN BUS [ME 9210/Wi-ME 9210]	Timer [ME 9210/ Wi-ME 9210]	Other [All]
Wi-ME/ Wi-ME 9210	ME/ME 9210											
	1											VETH +
	2											VETH-
	3-6	Positions Removed										
1	7	RXD	A3	GPIO[3]				DATA IN	PIC_0_GEN _IO[3]			
2	8	TXD	A7	GPIO[7]				DATA OUT			Timer Out 7 Timer In 8	
3	9	RTS	A5	GPIO[5]		3		CLK			Timer Out 6	
4	10	DTR	A6	GPIO[6]						PIC_CAN _TXD	Timer In 7	
5	11	CTS	A1	GPIO[1]		0			PIC_0_GEN _IO[1]			
6	12	DSR	A2	GPIO[2]		1			PIC_0_GEN _IO[2]	PIC_CAN _RXD		
7	13	DCD	A0	GPIO[0]				EN	PIC_0_GEN _IO[0]			
8	14											/RST
9	15											3.3V
10	16											GND
11	17		C4	GPIO[12]			SDA	CLK				RESE T_ DONE
12	18		C1	GPIO[9]	1	0	SCL					
13	19	Reserved										
14	20		C5	GPIO [13]				CLK			Timer Out 9	/INIT

Module JTAG Interface Pinout

The following table provides signal header pinout information for the Digi Connect ME JTAG pin and the Development Board JTAG Connector (P11) pin.

Module JTAG Interface Connector Pin Assignments

JTAG Signal	ME JTAG pin #	JTAG Connector (P11) pin #
+3.3V	1	2
GND	2	1
TRST#	3	4
GND	4	3
TDI	5	6
GND	6	5
TMS	7	8
GND	8	7
TCK	9	10
RXD	10	9
TDO	11	12
SRST	12	11
+3.3V	13	14
TXD	14	13

LEDs

The embedded modules have two types of LEDs:

- An LED connected directly to GPIO pins on the processor and controlled directly in software
- An LED connected to other hardware components (normally the Ethernet hardware) and not directly programmable by the operating system

The development kit, by default, correctly configures the GPIO connected to the LED as an output and then uses this LED to represent Ethernet activity.

LED	Description
Yellow	This is wired directly to Ethernet hardware and provides an indication of link.
Green	This software-programmable LED is wired to processor GPIO register bit C6/ GPIO[14] and is wired to be lit when low. The default behavior is to blink on Ethernet activity.

Reset - Hard Reset

The Connect ME and ME 9210 modules support a hardware reset via pin 14 of the 20-pin header. The Connect Wi-ME and Wi-ME 9210 modules support a hardware reset via pin 8 of the 14-pin header. The unit is forced into a hard reset when pulling the pin to ground, or less than 0.8v, for one microsecond (Min). When plugged into a development board, this pin is wired to the push button at SW4. As a result, this switch acts as a hard reset button.

Reset Characteristics	
Characteristic	**Specification**
Delay	250 milliseconds (typical)
Low ActiveThreshold	0.8 V
High Inactive Threshold	2.4V
Minimum Hold Time	1 microsecond pulse
Rise Time	100 microseconds max

Memory

The Digi Connect ME has the following types of memory.

Flash

The Digi Connect ME has 2 or 4 MB of flash memory. The Digi Connect Wi-ME has 4 MB or 8 MB of flash memory.

On the Digi Connect ME/ARM7 family, the flash memory is controlled by chip select 0, located at 0x02000000.

On the Digi Connect ME 9210/ARM9 family, the flash memory is controlled by chip select 2 (default=st_cs1) and is located at 0x50000000.

SDRAM

The Digi Connect ME and the Digi Connect Wi-ME's SDRAM is controlled by chip select 1 and is located at 0x00000000.

The Digi Connect ME 9210's SDRAM is controlled by chip select 1 (default = dy_cs0) and is mapped to 0x00000000.

The embedded modules have 8 MB of SDRAM memory.

The following table illustrates typical power consumptions using these power management mechanisms. These measurements were taken with all Digi NS9210 processor's I/O clocks disabled except UART A, UART C, Ethernet MAC, I/O Hub and Memory Clock0 with the ethernet connected to a 100Mb network, using a standard module plugged into a Digi JumpStart Kit development board, with nominal voltage applied:

Mode	Power Consumption[1]
Normal Operational Mode[2]	1.14W (346mA)
Full Clock Scaling Mode[3]	.613W (186mA)
Sleep Mode[4]	.113W (34mA)

Note 1: This measurement was taken from the R6 current sense resistor using a 0.025 ohm shunt on the JumpStart Kit development board.

Note 2: This is the default power consumption mode when entering applicationStart(), as measured with the napsave sample application. The value of the NS9210 Clock Configuration register (A090017C) is 0001200B hexadecimal.

Note 3: This measurement was produced by selecting the "Clock Scale" menu option in the napsave sample application.

Note 4: This measurement was produced by selecting the "Deep Sleep/Wakeup with an External IRA" menu option in the napsave sample application.

Module Specifications

APPENDIX A

Network Interface

Digi Connect ME/ME 9210

- Standard: IEEE 802.3
- Physical Layer: 10/100Base-T
- Data Rate: 10/100Mbps (auto-sensing)
- Mode: Half-duplex and full-duplex support (auto-sensing)
- Connector: RJ-45

Digi Connect Wi-ME

- Standard: IEEE 802.11b/Standard: IEEE 802.11b/g/n
- Frequency: 2.4 GHz
- Data Rate: Up to 11 Mbps with automatic fallback
- Modulation: CCK (11/5 Mbps), DQPSK (2 Mbps), DBPSK (1 Mbps)
- Transmit Power: 16 dBm typical
- Receive sensitivity:
  - 1Mbps: -92 dBm
  - 2Mbps: -89 dBm
  - 5.5Mbps: -87 dBm
  - 11Mbps: -82 dBm
- Antenna Connector: 1 x RP-SMA



Caution The Digi Connect ME and Digi Connect Wi-ME embedded modules were designed for use in no clean flux wave soldering processes. The product is not designed to support draining after a water-wash process, which can lead to water residue inside the enclosure resulting from direct entry or condensation after the wash process.

Serial Interface

One TTL serial interface (CMOS 3.3v) with full modem control signals (DTR, DSR, DCD, RTS, CTS). The Digi Connect ME 9210 also supports SPI and FIM-based application specific interfaces.

Data Rates (bps)

50, 75, 110, 134, 150, 200, 300, 600, 1200, 1800, 2400, 4800, 9600, 14400,19200, 28800, 38400, 57600, 115200, 230400, 460800 (Digi Connect ME 9210 only), 921600 (Digi Connect ME 9210 only)

Flow Control Options

RTS/CTS, XON/XOFF, None

DC Characteristics

The following tables provide DC characteristics for operating conditions, inputs, and outputs.

Operating Conditions						
Symbol	**Description**	**Min**	**Typ**	**Max**		**Unit**
V_{CC}	Supply Voltage	3.14	3.3	3.45		V
n/a	Power Supply Ripple			40		mVpp
I_{CC}	Supply Current	—	—	Digi Connect ME	270	mA
				Digi Connect ME 9210	450	
				Digi Connect Wi-ME	650	
I_{IL}	Input Current as “0” (57K pull-up resistor)	—	—	57		µA
	9210 (16K pull up resistor)	-10	—	200		µA
I_{IH}	Input Current “1” (57K pull-up resistor)	-10	—	10		µA
	9210 (16K pull up resistor)	-10	—	10		µA
I_{OZ}	HighZ Leakage Current	-10	—	10		µA
I_{OD}	Output Drive Strength	—	—	2		mA
C_{IO}	Pin Capacitance (V_O=0)	—	—	4		pF



Warning: The rise time of the 3.3v power supply must be between 700 mS and 140ms and the inrush current must be limited to less than 2 A. A rise time outside of these limits may cause the device to malfunction and give a 3-1-3 diagnostic error.

Inputs					
Symbol	**Description**	**Min**	**Typ**	**Max**	**Unit**
V_{IH}	Input High Voltage	2	—	V_{CC}+0.3	V
V_{IL}	Input Low Voltage	V_{SS}-0.3	—	.8	V

Outputs					
Symbol	**Description**	**Min**	**Typ**	**Max**	**Unit**
V_{OH}	Output High Voltage	2.4	—	3.45	V
V_{OL}	Output Low Voltage	0	—	0.4	V

Note: The embedded modules provide an on board supervisor circuit with a 2.93V (nominal) reset threshold. When V_{CC} falls to the threshold voltage, a reset pulse is issued, holding the output in active state. When power rises above 2.88V, the reset remains for approximately 250 ms to allow the system clock and other circuits to stabilize.

	Digi Connect ME	**Digi Connect Wi-ME**
Storage Temperature	-40° F to 257° F (-40° C to 125° C)	
Relative Humidity	5% to 90%, not to exceed 95% non-condensing (4° C to 45° C), constant absolute humidity above 45° C	
Altitude	12,000 feet (3657.60 meters)	

Grounding Recommendation

It is recommended that you connect the tabs on the chassis of the Digi Connect ME / Wi-ME, and the ground pins directly to the logic ground plane. It is also recommended that you connect the Digi Connect ME / Wi-ME to the metal chassis of your enclosure. The idea is to provide the shortest path or a path away from circuitry for ESD to travel to ground.

Power Management (Digi Connect ME 9210 only)

Using the Digi NET+OS development environment, applications on the Digi Connect ME 9210 are capable of operating the module in several reduced power consumption modes. These reduced power operating modes utilize the power management mechanisms for the NS9210 processor for CPU clock scaling and sleep.

In the Clock Scaling mode, the system itself continues to execute instructions, but at a different clock rate, which can be changed on-the-fly, using Digi's patented circuitry inside the NS9210 processor. The clock speed is changed programmatically to lower or raise the system clock speed, thus reducing or increasing the module's power footprint, respectively.

Additionally, a Sleep mode is available in which the system stops executing instructions. Based on the application needs, wake-up triggers can be set up programmatically to activate the processor back to wherever it left off. In this mode, a drastic power reduction is realized by reducing the power consumption of the NS9210 processor and the on-module PHY.

For sample power consumption figures for normal (typical) and power management related operation of the Digi Connect ME 9210, see below:

- 3.3VDC @ 346 mA typical (1.14W)
- UART and Ethernet activated

Low Speed Idle Mode (approximate)

- 3.3VDC @ 186 mA (613 mW)
- /16 clock scaling, Ethernet activated

Sleep Mode (approximate)

- 3.3VDC @ 34 mA (113 mW)
- Wake-up on EIRQ, Ethernet PHY off

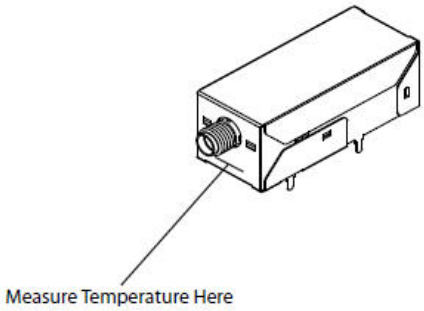

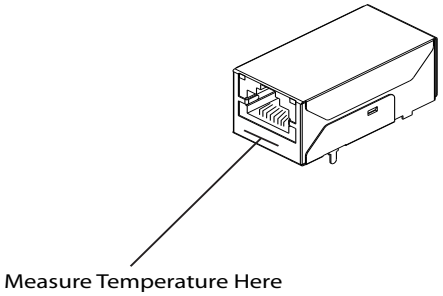

Thermal Specifications

The table below shows the standard operating temperature ranges for the entire Digi Connect ME family of embedded modules.

Standard Operating Temperature Ranges	
Product	**Operating Temperature Range**
Digi Connect ME	-40°C to +85°C
Digi Connect ME 9210	-40°C to +80°C
Digi Connect Wi-ME	-30°C to +75°C

The lower standard operating temperature ranges are specified without restrictions, except condensation must not occur.

The upper operating temperature limit depends on the host PCB layout and surrounding environmental conditions. To simplify the customer's design process, a maximum case temperature has been specified.

Maximum Case Temperature	
Product	**Maximum Case Temperature**
Digi Connect ME	96°C
Digi Connect ME 9210	93°C
Digi Connect Wi-ME	85°C

The maximum case temperature must remain below the maximum, measured at the location shown in the figure on the previous page.

Additional Design Recommendations

The following list provides additional design guidance with respect to thermal management in applications with operating temperatures at the high end or beyond the specified standard ambient temperature range.

- Providing air movement will improve heat dissipation.
- The host PCB plays a large part in dissipating the heat generated by the module. A large copper plane located under the Digi Connect ME 9210 is soldered to the module's mounting tabs will improve the heat dissipation capabilities of the PCB.
- If the design allows, added buried PCB planes will also improve heat dissipation. The copper planes create a larger surface to spread the heat into the surrounding environment.
- Adding a thermal pad or thermal compound, such as Sil-Pad®, Gap Pad® or Gap Filler products made by the Bergquist Company (www.bergquistcompany.com), between the host PCB and the underside of the module will significantly increase the thermal transfer between the module's enclosure and the host PCB. Limit the fill area to the folded metal portion of the module's underside.

Mechanical Specifications

<table>
<tr><th>Dimensions</th><th>Digi Connect ME</th><th colspan="2">Digi Connect Wi-ME</th></tr>
<tr><td>Length</td><td>1.445 in.
(36.703 mm)</td><td colspan="2">1.85 in
(46.99 mm)</td></tr>
<tr><td>Width</td><td colspan="3">0.75 in. (19.05 mm)</td></tr>
<tr><td>Height</td><td colspan="3">0.854 in. (21.69 mm)</td></tr>
<tr><td rowspan="2">Weight</td><td rowspan="2">.616oz.
17.463g</td><td>.696 oz.
19.731 g.</td><td>Antenna:.408 oz.
11.567 g</td></tr>
<tr><td colspan="2">Total: 1.104 oz.
31.298 g</td></tr>
<tr><td>Device/serial interface connector</td><td colspan="3">20-pin micro header (10-pin double row) with .05-inch (1.27-mm) pitch (Samtec P/N FTS-110-01-F-DV-TR or similar). Positions 3 through 6 are removed.</td></tr>
</table>

Bar Code

The 50m PN is code 3 of 9 (39) and the MAC is code 128. All scanners are set up so if they read code 3 of 9 they will automatically read 128. The reason for the two different code types is to maximize the size of the bars within a given space to improved readability.

Dimensions

The following figures show the dimensions of the Digi Connect Wi-ME and Digi Connect ME embedded modules

Tolerances Used in Dimensions

Figures in this appendix show the dimensions of Digi Connect Wi-ME and Digi Connect ME embedded modules. In these figures, the following tolerances are used for any measurements:

Measure	Tolerance
.XX	± .02
.XXX	± .010
Angles	± 3°

Digi Connect Wi-ME Module

Front View

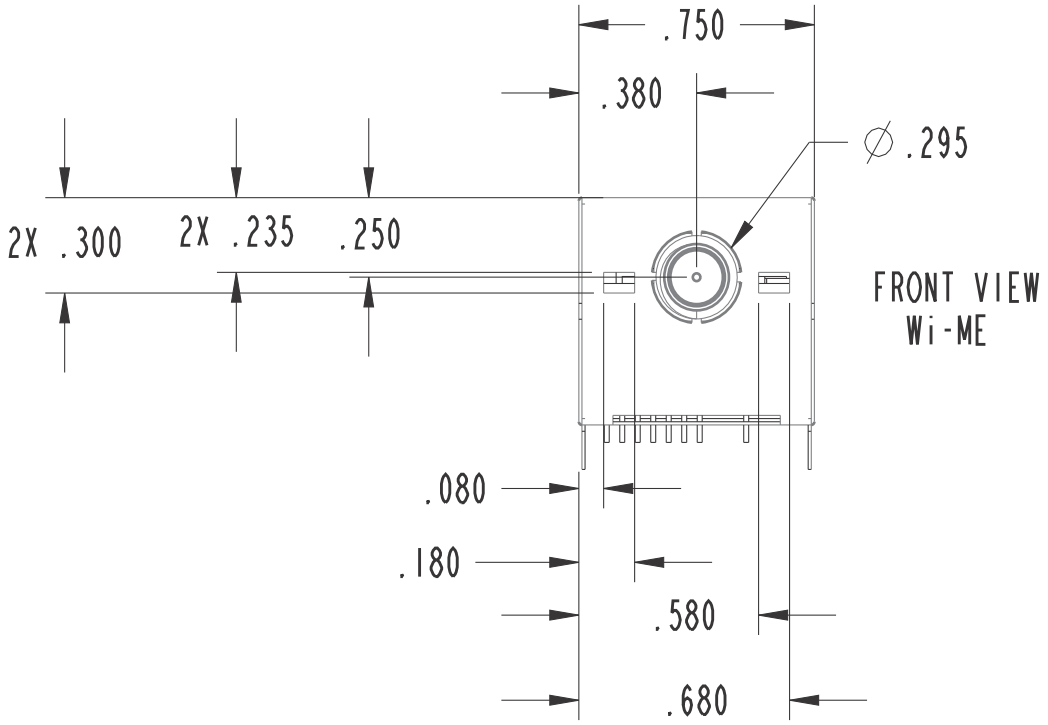

Side View

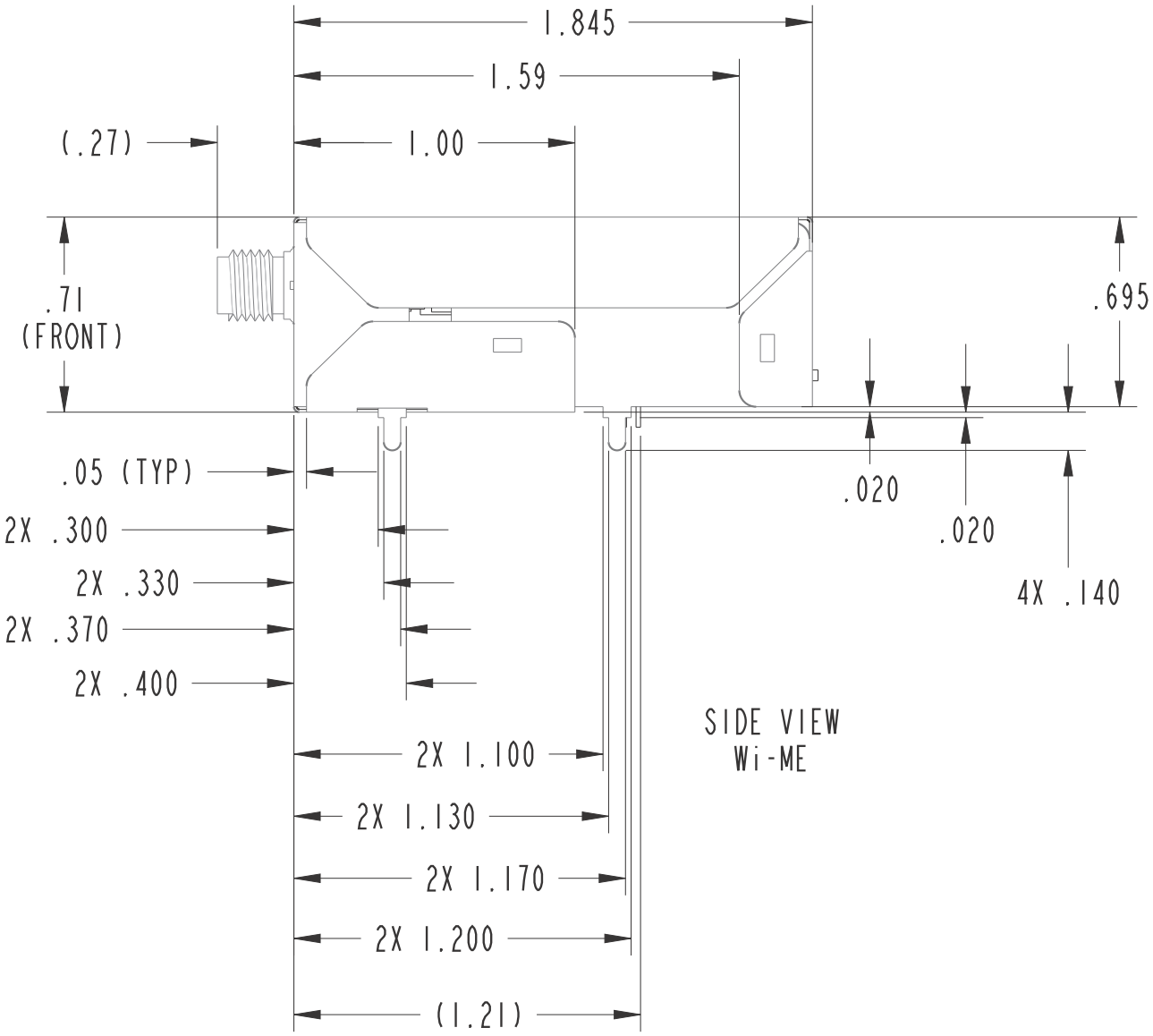
1.845
1.59
(.27)
1.00
.71
(FRONT)
.695
.05 (TYP)
2X .300
2X .330
2X .370
2X .400
.020
.020
4X .140
SIDE VIEW
Wi-ME
2X 1.100
2X 1.130
2X 1.170
2X 1.200
(1.21)

Bottom View

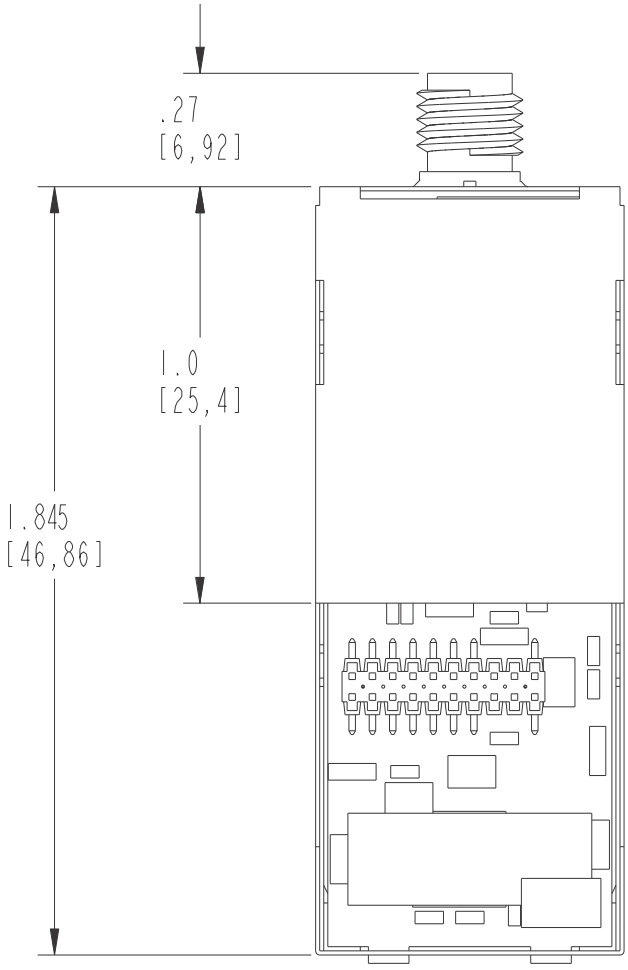

Digi Connect ME Module

Front View

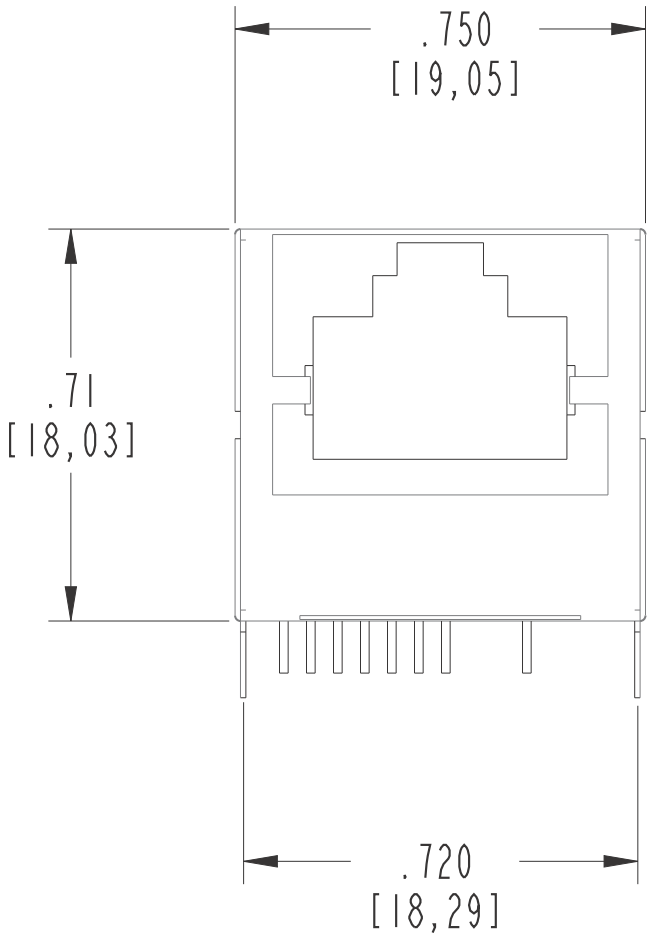

Side View

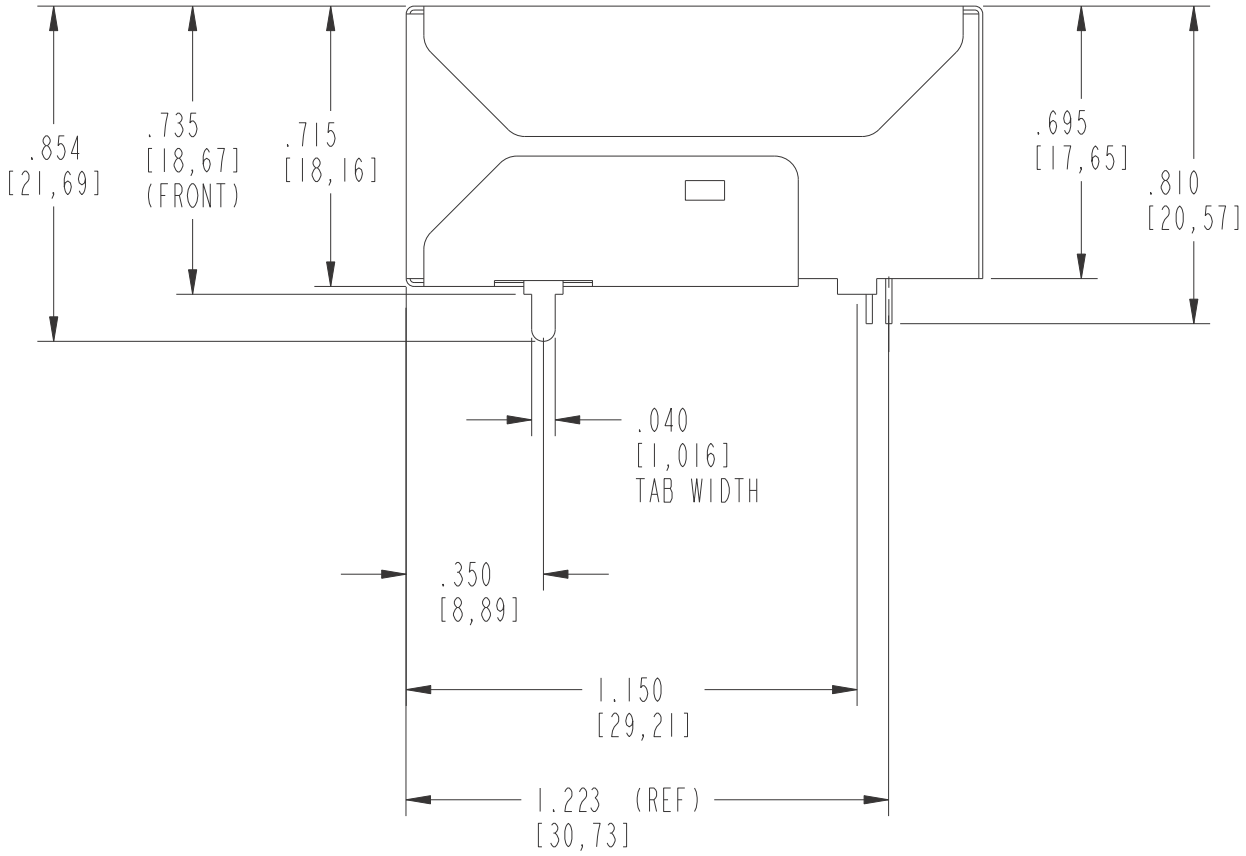

SIDE VIEW

Bottom View

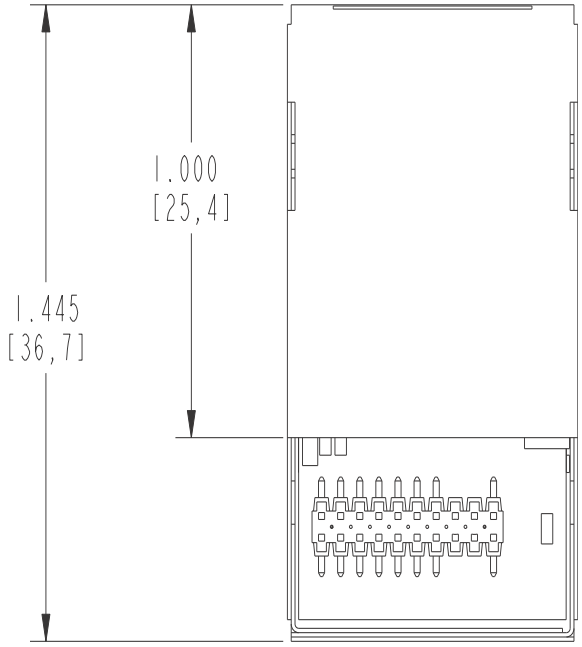

Recommended PCB Layout

The following figures show the recommended PCB (printed circuit board) layout of the Digi Connect ME.

Important: The Digi Connect ME has several different product variants with different feature sets. **It is strongly recommended that you check the Digi Connect ME product pages on the Digi website for more information on the product variants.** Following are several Digi Connect ME product pages; additional product pages and drawings may be provided.

Digi Connect ME product page
Digi Connect Wi-ME product page
Digi Connect ME 9210 product page
Digi Connect Wi-ME 9210 product page

Digi Connect ME PCB Top Dimensions

PCB Top Dimensions without JTAG Interface

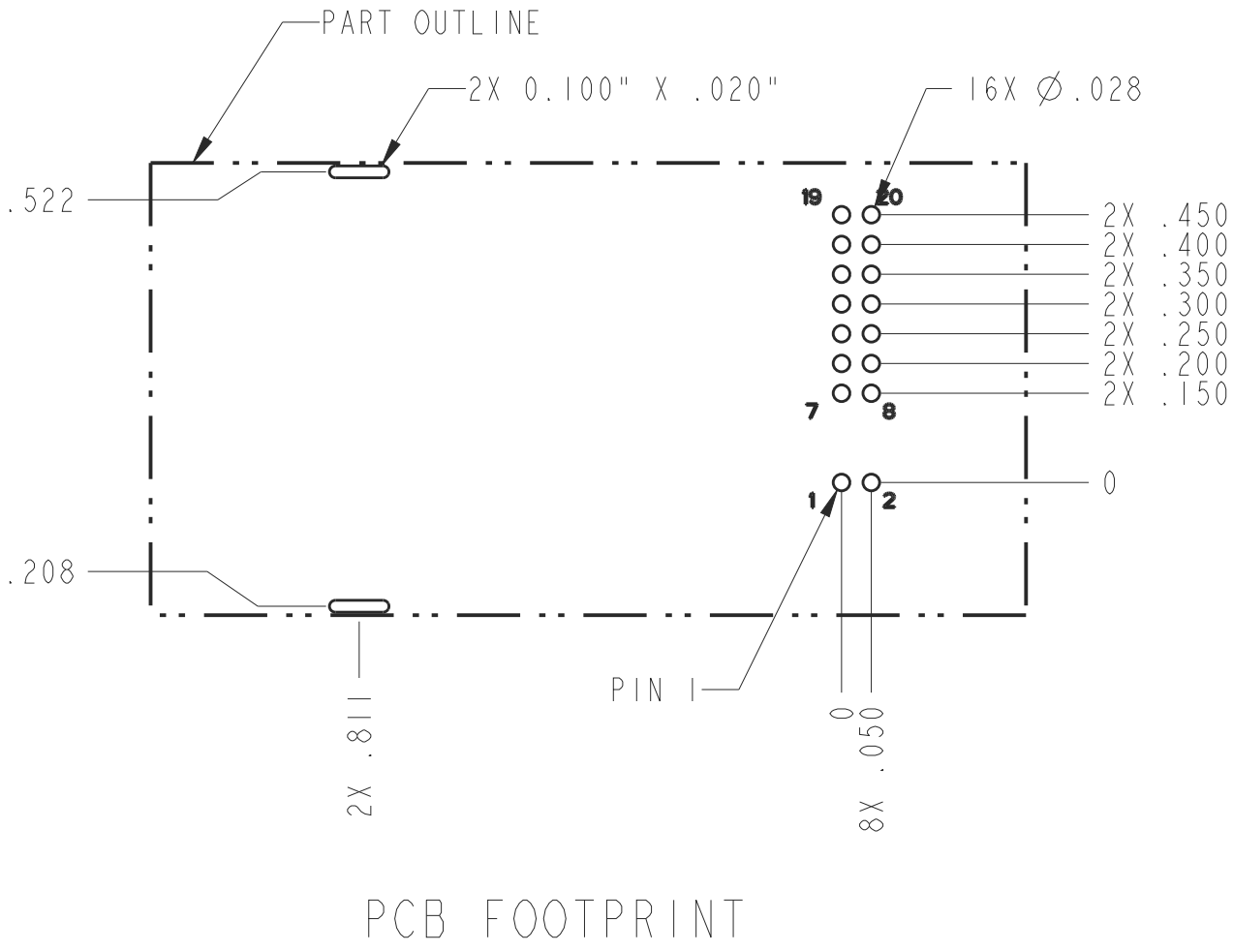

PCB Top Dimensions with JTAG Interface

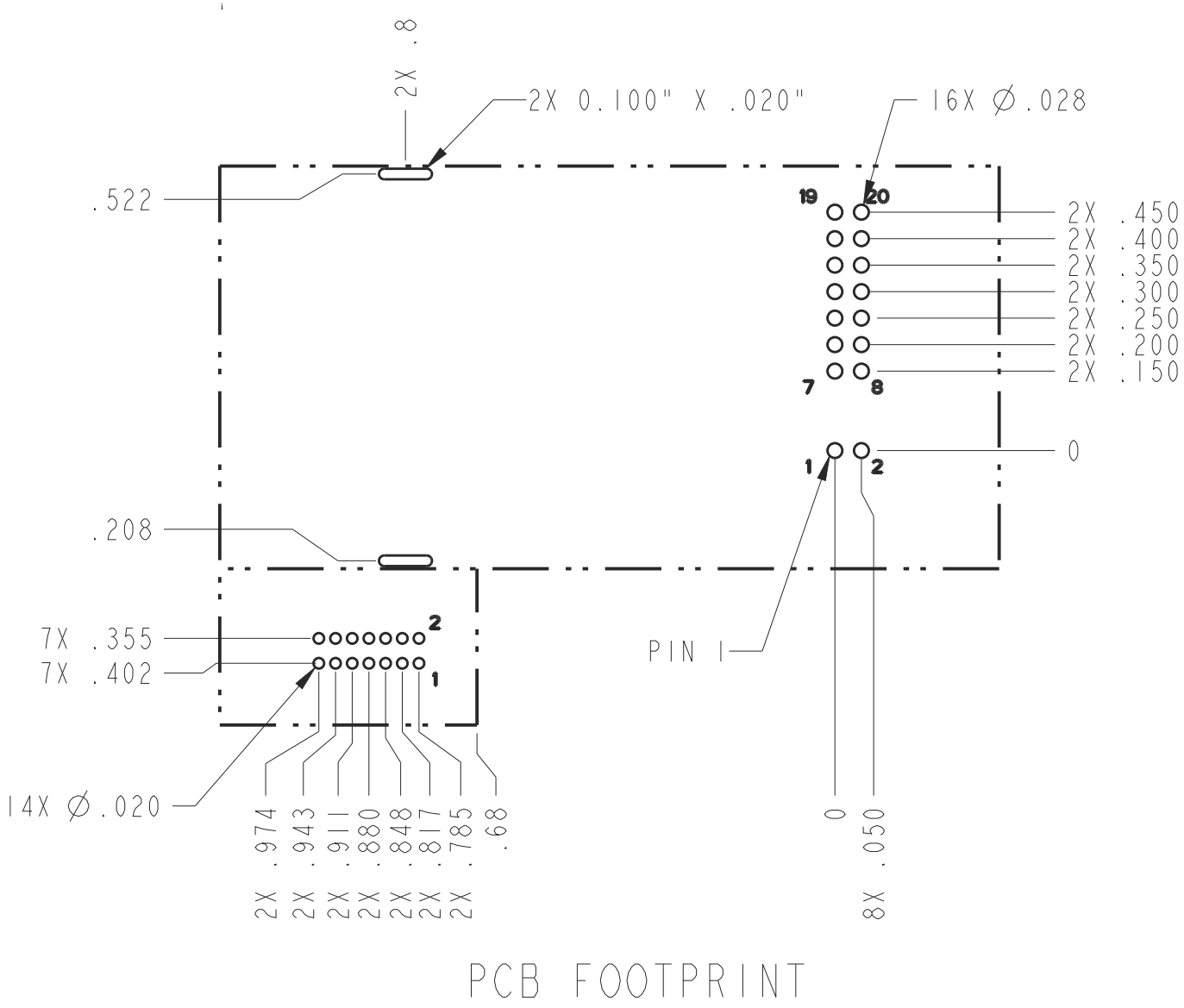

Antenna Information

Antenna Strength

The following diagram demonstrates the strength of the signal received by the whip antenna on both a horizontal and vertical plane. The diagram shows the magnetic field when the antenna is in a vertical position. The outside line represents the horizontal plane and the inside dotted line represents the vertical plane.

Radiation Patterns

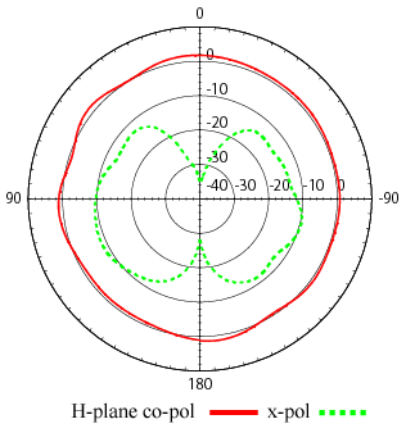

Antenna Specifications

Antenna Description	Dipole	Desktop
Frequency	2.4~2.5 GHz	2.4~2.5 GHz
Power Output	2 W	1 W
DB Gain	2 dBi	1.8 dBi
VSWR	< or = 2.0	1.92 max.
Nominal Impedance	50 ohm	50 ohm
Dimension	108.5 x 10.0 mm	105 x4.5 mm
Weight	10.5g	11 g
Connector	RP-SMA	
Part Number	DG-ANT-20DP-BG	DC-ANT-24DT

Any antenna matching the in-band and out-of-band signal patterns and strengths of the antenna, whose characteristics are given in the Antenna Description table and the Radiation Pattern graphic may be used with the Digi Connect Wi-ME.

Desktop Antenna Dimensions

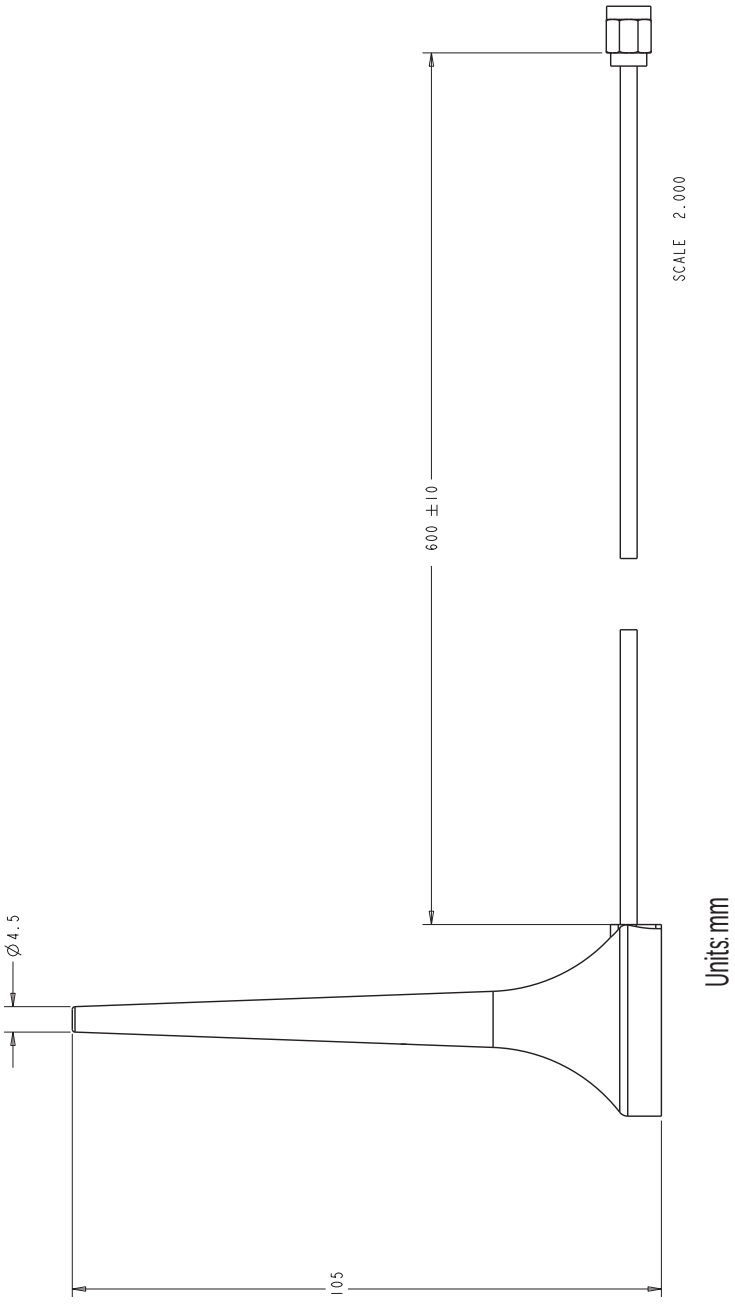

Dipole Antenna Dimensions

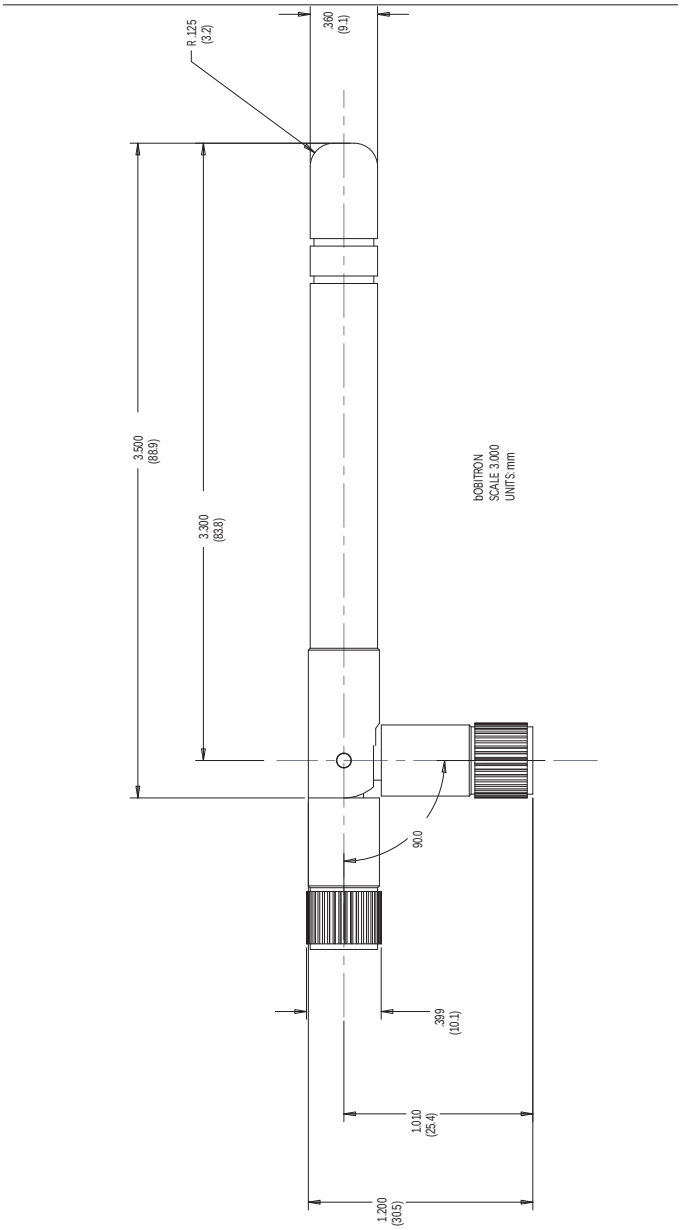

RF Exposure Statement

The Digi Connect Wi-ME module complies with the RF exposure limits for humans as called out in RSS-102. It is exempt from RF evaluation based on its operating frequency of 2.4 GHz, and effective radiated power less than the 3 watt requirement for a mobile device (>20 cm separation) operating at 2.4 GHz.

Safety Statements

To avoid contact with electrical current:

- Never install electrical wiring during an electrical storm.
- Never install an ethernet connection in wet locations unless that connector is specifically designed for wet locations.
- Use caution when installing or modifying ethernet lines.
- Use a screwdriver and other tools with insulated handles.
- You and those around you should wear safety glasses or goggles.
- Do not place ethernet wiring or connections in any conduit, outlet or junction box containing electrical wiring.
- Installation of inside wire may bring you close to electrical wire, conduit, terminals and other electrical facilities. Extreme caution must be used to avoid electrical shock from such facilities. You must avoid contact with all such facilities.
- Ethernet wiring must be at least 6 feet from bare power wiring or lightning rods and associated wires, and at least 6 inches from other wire (antenna wires, doorbell wires, wires from transformers to neon signs), steam or hot water pipes, and heating ducts.
- Do not place an ethernet connection where it would allow a person to use an ethernet device while in a bathtub, shower, swimming pool, or similar hazardous location.
- Protectors and grounding wire placed by the service provider must not be connected to, removed, or modified by the customer.
- Do not touch un-insulated ethernet wiring if lightning is likely!
- Do not touch or move any antennas while the unit is transmitting or receiving.
- Do not hold any component containing a radio such that the antenna is very close to or touching any exposed parts of the body, especially the face or eyes, while transmitting.
- Do not operate a portable transmitter near unshielded blasting caps or in an explosive environment unless it is a type especially qualified for such use
- Any *external* communications wiring you may install needs to be constructed to all relevant electrical codes. In the United States this is the National Electrical Code Article 800. Contact a licensed electrician for details.

Certifications

APPENDIX B

These products comply with the following standards.

FCC Part 15 Class B

Radio Frequency Interference (RFI) (FCC 15.105)

The Digi Connect ME and Digi Connect Wi-ME embedded modules have been tested and found to comply with the limits for Class B digital devices pursuant to Part 15 Subpart B, of the FCC Rules. These limits are designed to provide reasonable protection against harmful interference in a residential environment. This equipment generates, uses, and can radiate radio frequency energy, and if not installed and used in accordance with the instruction manual, may cause harmful interference to radio communications. However, there is no guarantee that interference will not occur in a particular installation. If this equipment does cause harmful interference to radio or television reception, which can be determined by turning the equipment off and on, the user is encouraged to try and correct the interference by one or more of the following measures:

- Reorient or relocate the receiving antenna.
- Increase the separation between the equipment and the receiver.
- Connect the equipment into an outlet on a circuit different from that to which the receiver is connected.
- Consult the dealer or an experienced radio/TV technician for help.

Labeling Requirements (FCC 15.19)

This device complies with Part 15 of FCC rules. Operation is subject to the following two conditions: (1) this device may not cause harmful interference, and (2) this device must accept any interference received, including interference that may cause undesired operation.

If the FCC ID is not visible when installed inside another device, then the outside of the device into which the module is installed must also display a label referring to the enclosed module FCC ID. This exterior label can use wording such as the following: “Contains Transmitter Module FCC ID: MCQ-50M880/ IC: 1846A-50M880”.

Modifications (FCC 15.21)

Changes or modifications to this equipment not expressly approved by Digi may void the user's authority to operate this equipment.

Industry Canada

This digital apparatus does not exceed the Class B limits for radio noise emissions from digital apparatus set out in the Radio Interference Regulations of the Canadian Department of Communications.

Le present appareil numerique n'emet pas de bruits radioelectriques depassant les limites applicables aux appareils numeriques de la class B prescrites dans le Reglement sur le brouillage radioelectrique edicte par le ministere des Communications du Canada.

Declaration of Conformity

Digi Connect ME and Digi Connect Wi-ME Conformity

(In accordance with FCC Dockets 96-208 and 95-19)

Manufacturer's Name:	Digi International
Corporate Headquarters:	11001 Bren Road East Minnetonka MN 55343
Manufacturing Headquarters:	10000 West 76th Street Eden Prairie MN 55344

Digi International declares, that the product:

Product Name:	Digi Connect ME embedded module
Model Number:	50001528-XX
Product Name:	Digi Connect Wi-ME embedded module
Model Number:	50000880-XX

to which this declaration relates, meets the requirements specified by the Federal Communications Commission as detailed in the following specifications:

- Part 15, Subpart B, for Class B Equipment
- FCC Docket 96-208 as it applies to Class B personal
- Computers and Peripherals

The product listed above has been tested at an External Test Laboratory certified per FCC rules and has been found to meet the FCC, Part 15, Class B, Emission Limits. Documentation is on file and available from the Digi International Homologation Department.

Digi Connect ME 9210 Conformity

Manufacturer's Name:	Digi International
Corporate Headquarters:	11001 Bren Road East Minnetonka MN 55343
Manufacturing Headquarters:	10000 West 76th Street Eden Prairie MN 55344

Digi International declares, that the product:

Product Name:	Digi Connect ME 9210 module
Model Number:	50001528-XX, where -XX can be any alphanumeric character

to which this declaration relates are in conformity with the essential requirements and other relevant requirements of the Directive 2004/108/EC (EMC), and Directive 2006/95/EC (LVD).

EMC:(article 3.1b)	EN55022: 2006 (Class B)
	EN55024:2003 +A1:2001 +A2:2003
	EN61000-3-2:2006
	EN61000-3-3:1995 +A1 (2001) +A2 (2005)

Safety: (article 3.1a) EN60950-1:2001

International EMC Standards

	Digi Connect ME	Digi Connect Wi-ME
Storage Temperature	-40°F to 257°F (-40°C to 125°C)	
Humidity	5% to 90%	
Altitude	12000 feet (3657.60 meters)	

The Digi Connect ME and Digi Connect Wi-ME embedded modules meet the following standards:

Standards	Digi Connect ME	Digi Connect Wi-ME
Emissions	AS/NZS 3548	AS/NZS 3548 CISPR 22
		Japan IOH 003NY04115 0000 003GZ04064 0000
		FCC Part 15 Subpart C (FCC ID: MCQ-50M880)
		IC RSS 210 (IC:1846A-50M880)
	FCC Part 15 Subpart B ICES-003 EN 55022 EN 61000-4-2 EN 61000-4-3 EN 61000-4-6 EN 301 489-3 EN 300 328 VCCI	FCC Part 15 Subpart B ICES-003 EN 55022 EN 61000-4-2 EN 61000-4-3 EN 61000-4-6 EN 301 489-3 EN 300 328 VCCI
Immunity	EN 55024	EN 55024
Safety	UL 60950-1 CSA 22.2 No. 60950--1 EN 60950	UL 60950-1 CSA 22.2 No. 60950--1 EN 60950

Antenna configurations

This device has been designed to operate with the antennas listed below, and having a maximum gain of [10] dBi. Antennas not included in this list or having a gain greater than [10] dBi are strictly prohibited for use with this device. The required antenna impedance is [50] ohms

The following antenna configurations that were tested with the Connect Wi-ME 802.11 b module.

Digi 29000095, Bobbintron SA-006-1, +2 dBi dipole antenna (NP-SMA)

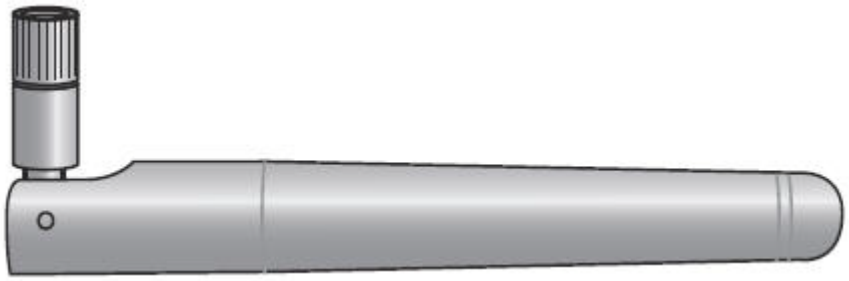

PCTEL, MLPV2400NGP, 2.4 GHz, 3dBi gain, no ground place, low profile antenna

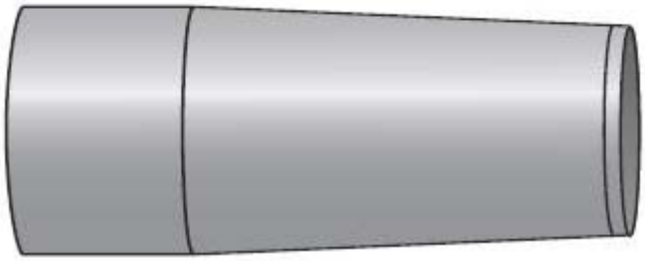

MAXRAD, MFB24010, 2.4 GHz, 10 dBi Fiberglass OMNI antenna



To reduce potential radio interference to other users, the antenna type and its gain should be so chosen that the equivalent isotropically radiated power (e.i.r.p.) is not more than that permitted for successful communication.

Sample Application: PoE Power Supply

A P P E N D I X C

The following schematics are examples of PoE Power Supplies:

2/8 Digi Connect ME

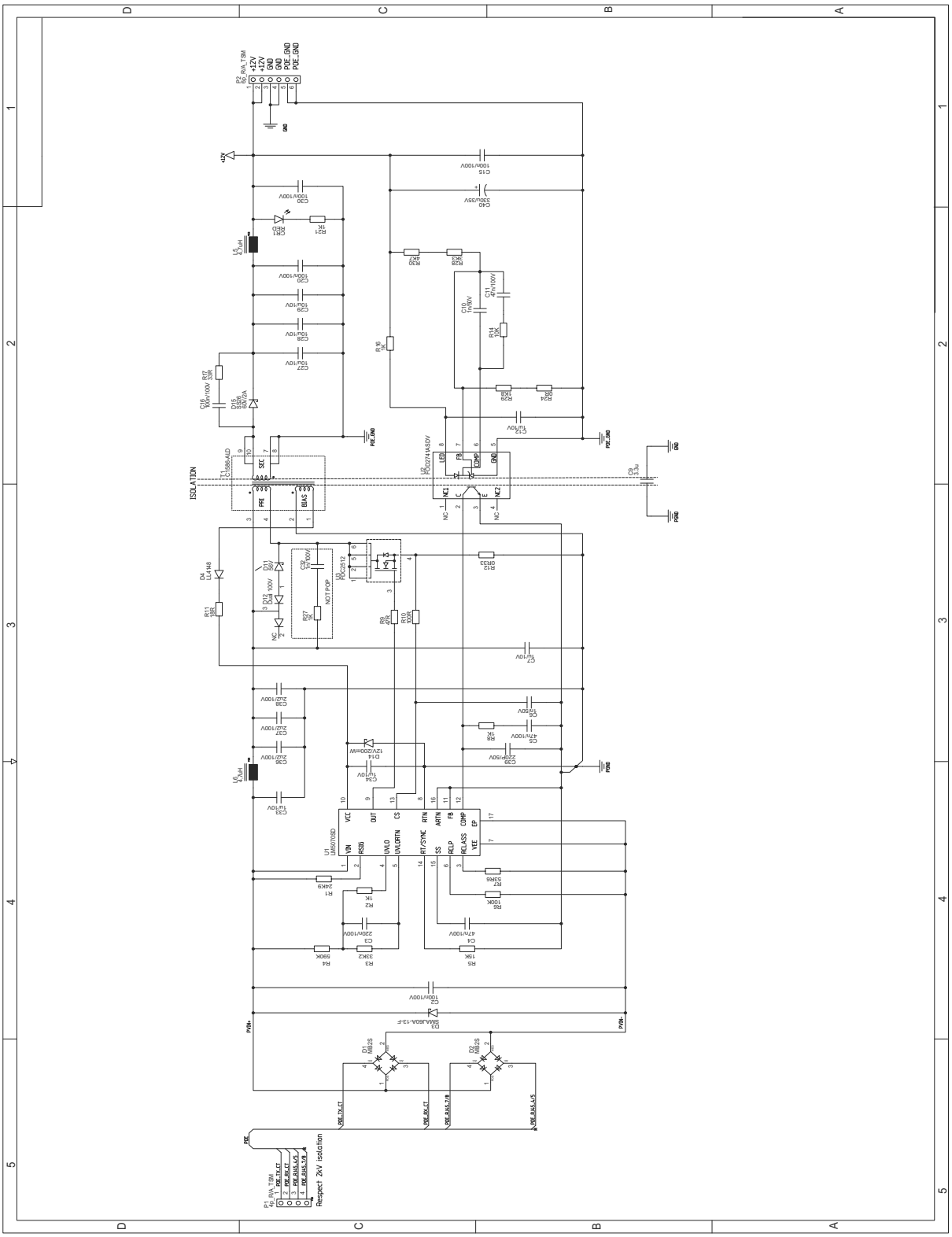

4/8 Digi Connect ME modules and Digi Connect ME 9210 modules

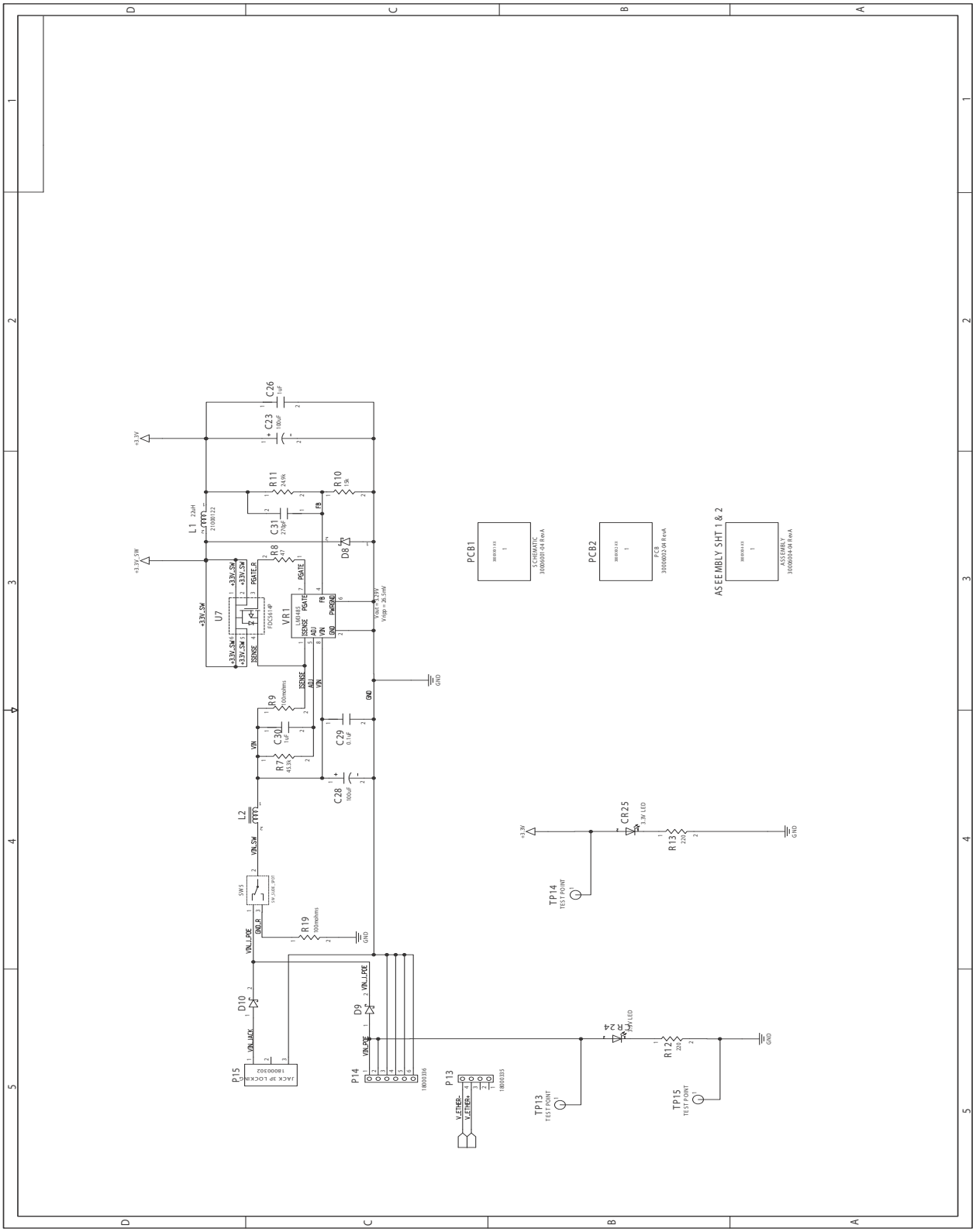

Sample Application: TTL Signals to EIA-232

A P P E N D I X D

The following schematic is an example of how to convert the modules's TTL signals to EIA-232.

SAMPLE APPLICATION

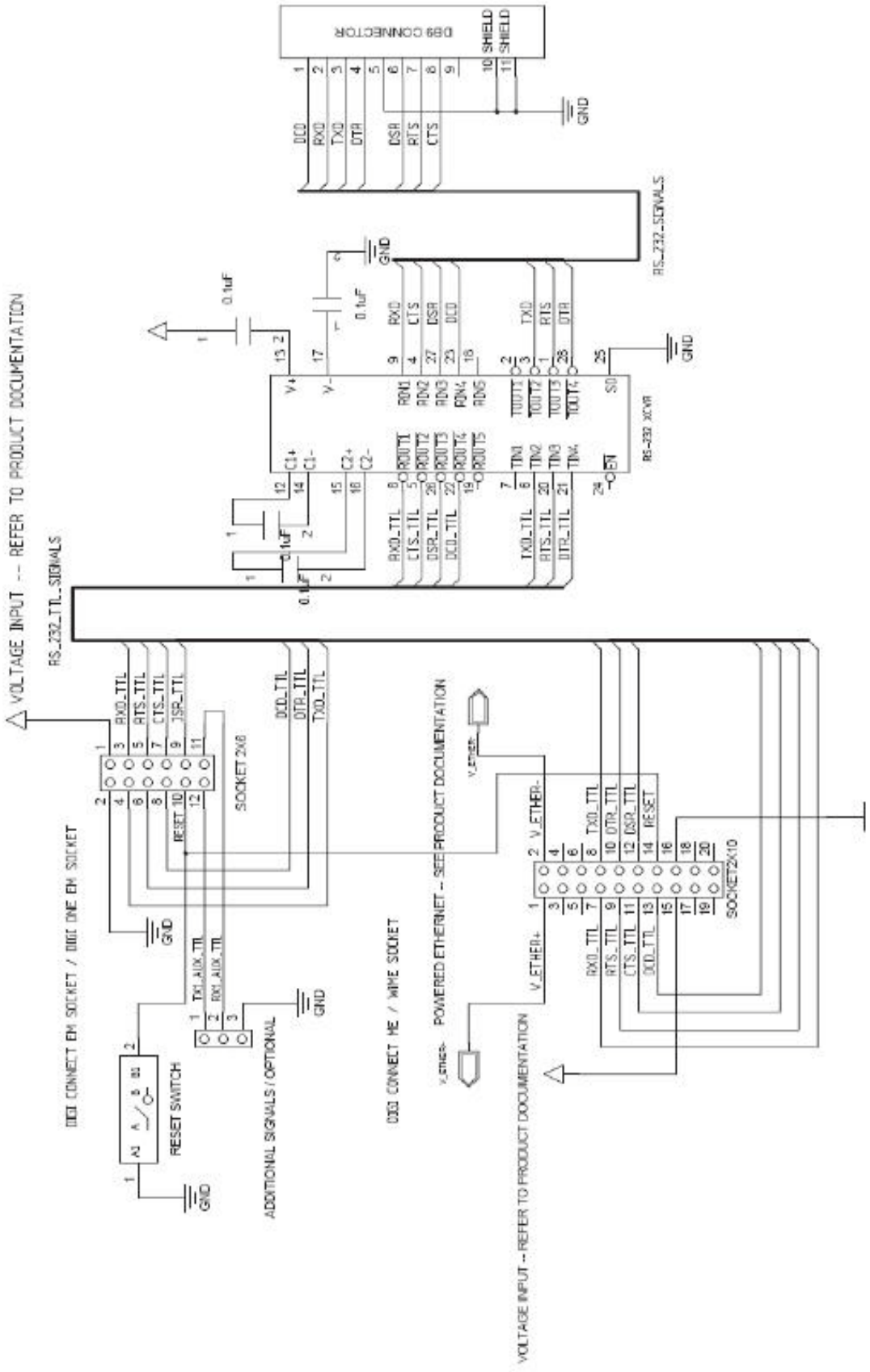

Change Log

APPENDIX E

The following changes have been made since the last revision of this document.

Note: As of September 2007, the document number for this Hardware Reference Manual changed from 90000631 to 90000897.

Revision L

- In Appendix A, Module Specifications, in Recommended PCB Layout, updated drawings and added links to additional drawings on Digi Connect ME and Wi-ME product pages.
- Various formatting and pagination changes.

Revision K

- Added additional signal description information to the Module Connector Pin Assignment table in Chapter 2.
- Updated the Digi Connect ME and Wi-ME PCB layout image in Appendix A.
- Updated the Power and Device Interface Connector image and table in Chapter 1.
- Updated the Embedded Module Connector Pin Orientation image in Chapter 2.
- Updated the Power and Device Interface Connector Pin Assignment table in Chapter 2.
- Updated the Development Board LED Description table in Chapter 2.
- Updated the Module Pinout key and table in Chapter 3.
- Added Connect Wi-ME and Wi-ME 9210 hard reset information to Chapter 3.
- Added the Digi Connect ME “Top Dimensions” figure to Appendix A.

Revision J

- Updated the recommended PCB layout image.
- Changed all mentions of “JTag” to “JTAG.”
- Corrected the V_{IL} Max value within the Inputs table of the DC Characteristics section in Appendix A.
- Improved the quality of the PoE Power Supply schematic in Appendix C.
- Added Digi Connect ME 9210 Declaration of Conformity information to Appendix B.
- Added revised front view and side view images of the Digi Connect ME and Digi Connect Wi-ME modules to Appendix A.

Revision I

This revision letter is not used in order to avoid confusion with other letters/numbers which it resembles.

Revision H

- Corrected bookmarks for pdf file.
- Correct pin numbering on the JTAG Debugger Connector Pin Orientation image.
- Added missing Digi Connect ME part numbers.
- Added section describing the JTAG Jumper and new accompanying image.
- Made several corrections and clarifications to the guide per a red lined print copy from BIll Kumpf.

Revision G

- Added CAN Bus information.

Revision F

- Added Digi Connect ME sketch to Thermal Specifications.
- Added antenna configurations.

Revision E

Changed schematics in appendix A to reflect correct measurements.

Revision D

Added a new section labeled “Thermal Specifications” to the book. This section outlines the temperature ranges at which the devices specified can still function properly.

Revision C

- Updates to schematics in Chapter 2.
- Added/revised Module Pin-out table in Chapter 3.
- Updated GPIO tables throughout book.

Revision B

- Fixed page numbers to make them correspond in PDF form.
- Added components to Development Board schematics. (#19 and 20)

Revision 90000631_G>90000897_A

- Added Digi Connect ME 9210 related information.
- Updated schematics in development board chapter to reflect 9210 changes.

Revision G

- Updated the Connectors: power and device interface section to say that pins 1 and 2 on the connector are available if using Digi Connect ME, not available if using Digi Connect Wi-ME. Updated the Embedded Module Connector table in Chapter 2 similarly.
- Added tolerance information for dimension drawings
- Updated Hard Reset section to clarify forcing the unit into hard reset
- Updated the ambient (operating) temperature for Digi Connect Wi-ME
- Added information regarding reading the bar code
- Added P12 Factory reset pin

Revision F

- Updated Antenna drawing
- Added product weights
- Updated UL labeling description
- Updated dimension drawings

Revision E

- Added Japan certification
- Improve dipole antenna drawing
- Corrected imperial pitch measurement
- Reformatted tables for easier reading
- Added antenna extension cord information
- Added more receive sensitivity information
- Added Caution for soldering process
- Added reset hold times
- Added VCC *absolute max* ratings
- Combined PCB layouts with improvements