24V/40A DIN Rail Type Uninterruptible DC-UPS Module

DUPS40

User's Manual



Automate Industrial Security Network Telecom

Features

- Uninterruptible DC-UPS controller
- Parallel connection to DC BUS
  (Power supply + DC-UPS Module + Batteries + Load)
- Suitable for 24V system, up to 40A
- 2A Battery charging current
- Allows 4AH~135AH lead-acid various battery capacities
- Complete diagnostic and monitoring for DC BUS OK, battery discharge, battery fail
- LED indicator for signal status
- Protections: Battery reverse polarity protection & Short circuit(By internal detection) / Battery discharge / Over discharge current
- Cooling by free air convection
- 3 years warranty

Applications

- Industrial control system
- Semiconductor fabrication equipment
- Factory automation
- Electro-mechanical apparatus

GTIN CODE

MW Search: https://www.meanwell.com/serviceGTIN.aspx

Description

The DUPS40 is a 40A DIN rail type DC-UPS module, and it is paired with a power supply and an external battery to achieve the backup function. When the AC mains fails or is interrupted, the load will be immediately connected to the battery pack to avoid interruption and to ensure the continuous operation of the entire system (the operating time depends on the capacity of the battery pack).

The main features of DUPS40 include: fast installation, suitability for 24V battery packs and various capacities of 4AH~135AH, 2A battery charging current, low voltage disconnect for battery protection and more. The product is suitable for use in data centers, security systems, emergency lighting, wireless communication UPS, central monitoring systems, etc.

Model Encoding

DUPS 40

- 40 — Output Current (40A)
- DUPS — DIN rail DC-UPS Module

24V/40A DIN Rail Type Uninterruptible DC-UPS Module DUPS40

SPECIFICATION

MODEL		DUPS40		
DC UPS INPUT	NORMAL INPUT VOLTAGE	24Vdc		
	INPUT VOLTAGE RANGE	24 ~ 29Vdc		
	RATED CURRENT	40A		
DC UPS OUTPUT	VOLTAGE RANGE	21 ~ 29Vdc		
	DISCHARGE CURRENT RANGE	0 ~ 40A		
	CHARGING CURRENT	2A		
BATTERY	NORMAL BATTERY VOLTAGE	24Vdc (2 x 12Vdc in series or 1 x 24Vdc)		
	BATTERY TYPE	Lead-acid battery		
	EXTERNAL BATTERY CAPACITIES	4AH ~ 135AH		
PROTECTION	BATTERY POLARITY	Protected by internal detection, No Damage, recovers automatically after fault conduction is removed		
	SHORT CIRCUIT	This protection only works when batteries are not connected, No Damage. External fuse is recommended when batteries are connected.		
	OVER DISCHARGE CURRENT	42~46A,After 3 sec., unit will cut-off battery discharging by relay		
	BATTERY DEEP DISCHARGE	Cut-off battery discharging by relay		
FUNCTION	RELAY CONTACT RATINGS (max.)	30VDC/1A resistive load		
	DC BUS OK	Relay contact : Short when DC voltage between 21~29V(±2%), relay contacts		
		LED(Green) : DC BUS OK : light ; DC BUS fail : dark		
	BATTERY FAIL Note.2	Short when battery voltage falls below 22V(±2%) or battery failure is observed through the battery test function, relay contacts		
		LED(Red) : Battery over-discharge warning or battery broken : light ; Battery OK : dark		
	BATTERY DISCHARGE	Relay contact : Short when battery in discharge condition, relay contacts		
		LED(Yellow) : light : Battery discharging ; dark : Battery is not discharging or discharging current < 2.0A		
ENVIRONMENT	COOLING	Free air convection		
	WORKING TEMP. Note.3	-30 ~ +70℃ (Refer to "Derating Curve")		
	WORKING HUMIDITY	5 ~ 95% RH non-condensing		
	STORAGE TEMP.	-40 ~ +85℃		
	TEMP. COEFFICIENT	±0.03%/℃ (0 ~ 60℃)		
	VIBRATION	Component:10 ~ 500Hz, 2G 10min./1cycle, 60min. each along X, Y, Z axes; Mounting: Compliance to IEC60068-2-6		
	OPERATING ALTITUDE Note.4	2000 meters/OVC II		
SAFETY & EMC (Note.5)	SAFETY STANDARDS	EAC TP TC 004 approved		
	WITHSTAND VOLTAGE	IP/OP - Chassis : 0.5KVac ; IP/OP- Relay : 0.5KVac ; Relay - Chassis : 0.5KVac		
	ISOLATION RESISTANCE	IP/OP - Chassis, IP/OP- Relay, Relay - Chassis:>100M Ohms / 500Vdc / 25℃/ 70% RH		
	EMC EMISSION	**Parameter**	**Standard**	**Test Level / Note**
		Conducted	-----	-----
		Radiated	BS EN/EN55032(CISPR32)	Class B
		Voltage Flicker	-----	-----
		Harmonic Current	-----	-----
	EMC IMMUNITY	BS EN/EN55035, BS EN/EN61000-6-2, BS EN/EN61204-3		
		Parameter	**Standard**	**Test Level / Note**
		ESD	BS EN/EN61000-4-2	Level 3, 8KV air ; Level 2, 4KV contact; criteria B Level 2, 4KV air ; Level 1, 2KV contact; criteria A
		Radiated	BS EN/EN61000-4-3	Level 3, 10V/m ; criteria A
		EFT / Burst	BS EN/EN61000-4-4	Level 3, 2KV ; criteria A
		Surge	BS EN/EN61000-4-5	Level 3, 0.5KV(DC input ports)
		Conducted	BS EN/EN61000-4-6	Level 3, 10V ; criteria A
		Magnetic Field	BS EN/EN61000-4-8	Level 4, 30A/m ; criteria A
OTHERS	MTBF	1376.5K hrs min. Telcordia SR-332 (Bellcore) ; 499.5K hrs min. MIL-HDBK-217F (25℃)		
	DIMENSION	63*125.2*113.5mm (W*H*D)		
	PACKING	0.42Kg; 20pcs/9.4Kg/1.57CUFT		

NOTE

1. All parameters NOT specially mentioned are measured at normal input(24V) , rated load and 25℃ of ambient temperature.
2. Every 30 seconds, unit will test the battery.If the testing result is faulty, unit will turn on “Battery Fail” relay contact and “Red LED” indicator.
3. Derating may be needed over high ambient temperature. Please check the derating curve for more details.
4. The ambient temperature derating of 3.5℃/1000m with fanless models and of 5℃/1000m with fan models for operating altitude higher than 2000m(6500ft).
5. The unit is considered a component which will be installed into a final equipment. All the EMC tests are been executed by mounting the unit on a 360*720mm metal plate with 1mm of thickness. The final equipment must be re-confirmed that it still meets EMC directives. For guidance on how to perform these EMC tests,please refer to "EMI testing of component power supplies." (as available on https://www.meanwell.com//Upload/PDF/EMI_statement_en.pdf)

※ Product Liability Disclaimer : For detailed information, please refer to https://www.meanwell.com/serviceDisclaimer.aspx

■ Block Diagram

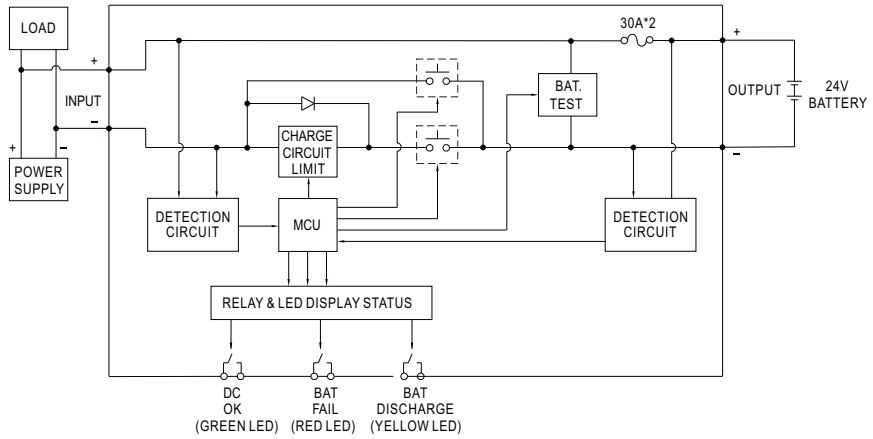

■ Derating Curve

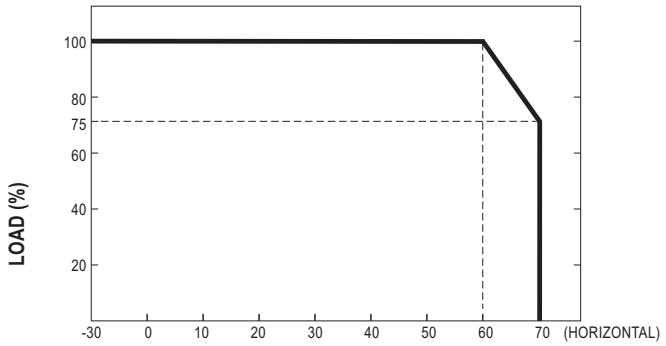

■ Buffering Time

Discharge Current	Buffering Time(Reference)		
	7.5AH	12AH	15AH
2.5A	6500s	14500s	19000s
5A	3000s	7000s	9000s
10A	1200s	2400s	3200s
20A	400s	1100s	1500s
30A	120s	450s	600s
40A	25s	200s	280s

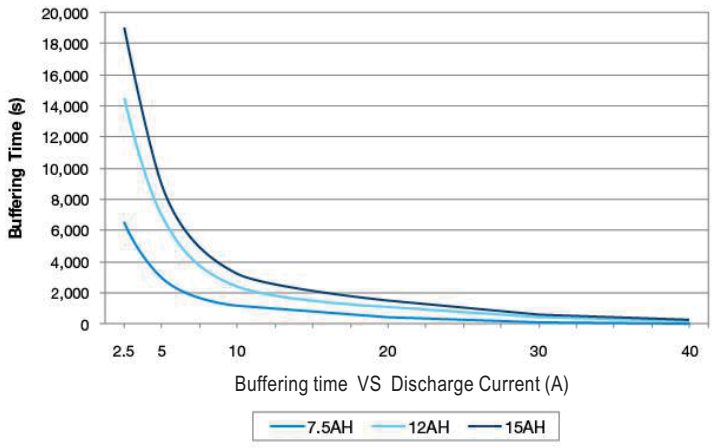

■ Mechanical Specification

(Unit: mm , tolerance ± 1mm)

Case No.979F

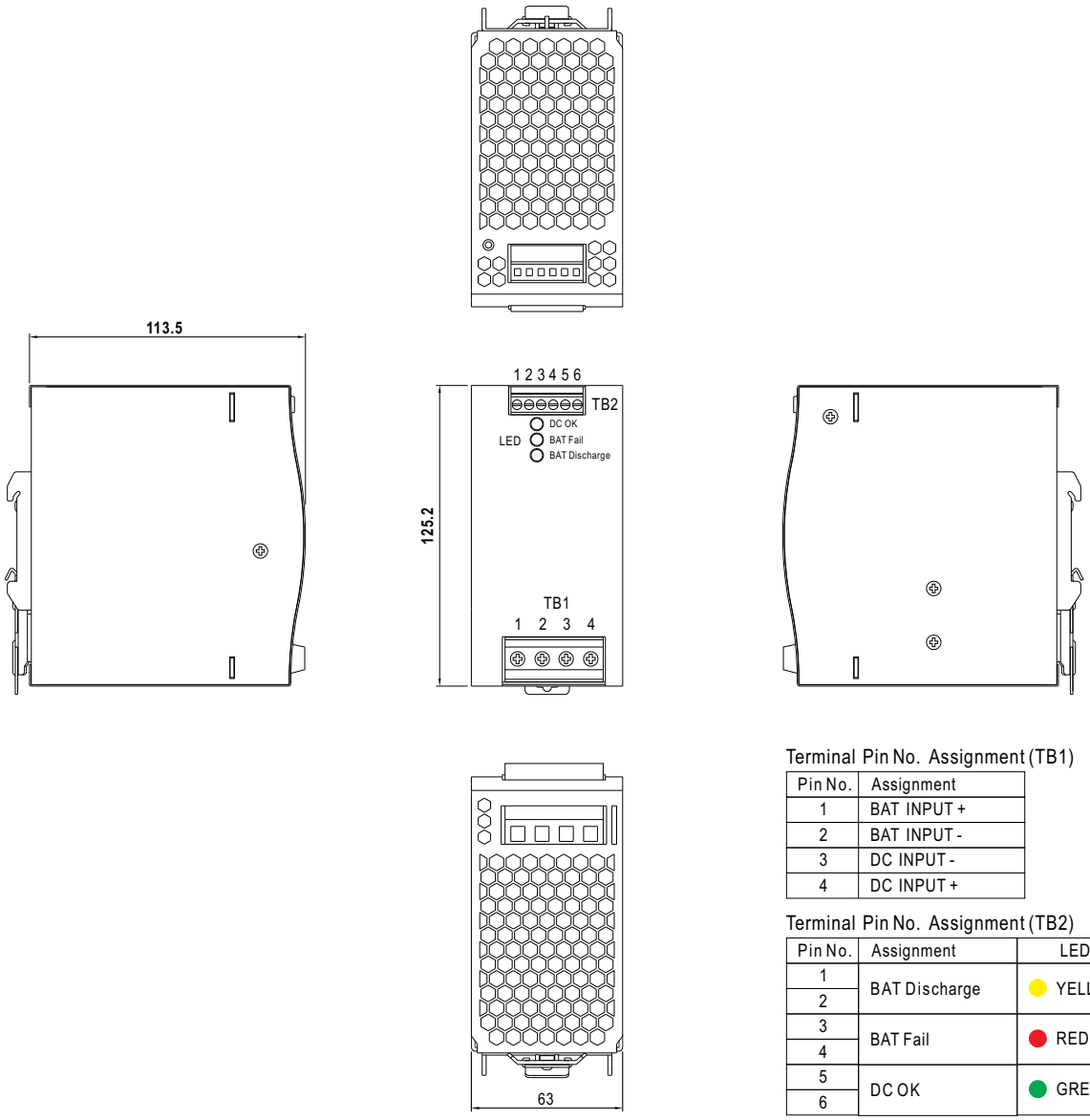

Terminal Pin No. Assignment (TB1)

Pin No.	Assignment
1	BAT INPUT +
2	BAT INPUT -
3	DC INPUT -
4	DC INPUT +

Terminal Pin No. Assignment (TB2)

Pin No.	Assignment	LED
1	BAT Discharge	YELLOW
2		
3	BAT Fail	RED
4		
5	DC OK	GREEN
6		

■ Installation Instruction

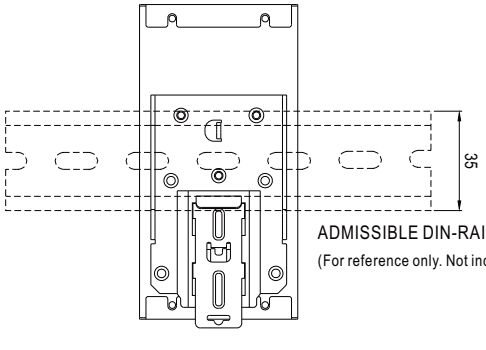

ADMISSIBLE DIN-RAIL:TS35/7.5 OR TS35/15

(For reference only. Not included with unit.)

Back View

This series fits DIN rail TS35/7.5 or TS35/15.

For installation details, please refer to the Instruction manual.

■ Suggested Application

1.Back up connection for AC interruption

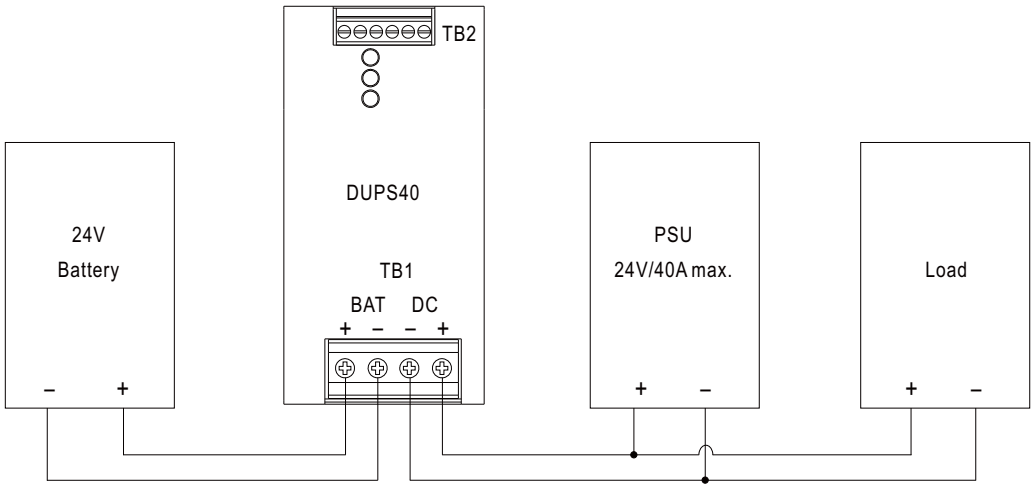

2.Combine redundancy module (DRDN20 or DRDN40) to back up AC interruption or failure of PSU

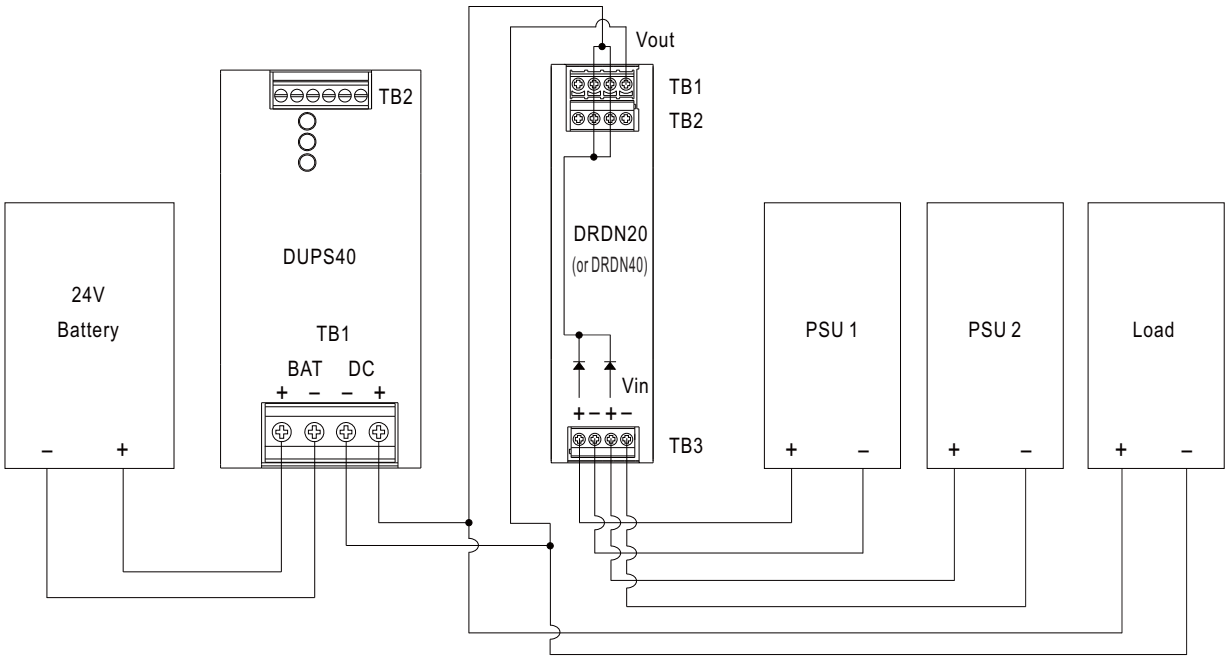

■ Installation Manual

Please refer to : http://www.meanwell.com/manual.html