MEAN WELL

# 1700W High Reliable True Sine Wave DC-AC Power Inverter NTS-1700 series



DC input side



AC output side



User's Manual

Video

IEC62368-1 BS EN/EN62368-1 (for 112/124 type GFCI only) UL458 TPTC004 AS/NZS 62368.1

Please refer to page3 for more details.

Household Railway Car Use Marine Network Telecom

## Features

- True sine wave output (THD<3%)
- High surge power up to 3400W
- Temperature controlled cooling fan
- AC output voltage and frequency selectable by DIP S.W
- No load disspation **<1.5W** at standby saving mode
- -25℃~+70℃ wide operating temperature
- Power ON-OFF remote control
- Front panel indicator for operation status
- Protections :
  Input : Reverse polarity / DC low alarm / DC low shutdown / Over voltage
  Output : Short circuit / Overload / Over temp.
- Battery over discharge protection (low voltage disconnect)
- Suitable for lead-acid or li-ion batteries
- Remote controller
  (IRC1, IRC2, IRC3 accessory sold separately, please refer to: https://www.meanwell.com/webapp/product/search.aspx?prod=IRC1 )
- Support RS-232 communication(Communication cable order No.: RJ11-RS232, sold sperately)
- Carry handle accessory available(Order NO.: Carry handle, sold separately)
- Conformal coating
- 3 years warranty

## Applications

- Home and office appliance
- Power tools
- Portable equipment
- Vehicle
- Yacht
- Off-grid solar power system
- Wireless network
- Telecom or datacom system

## GTIN CODE

MW Search: https://www.meanwell.com/serviceGTIN.aspx

## Description

NTS-1700 is a 1700W highly reliable off-grid true sine wave DC-AC power inverter. Its key features include: digital design with MCU control, streamlined control circuitry that quickly responds to environmental changes and improves reliability, high quality fan with low acoustic noise, 3400W peak power, adjustable AC output voltage and frequency, -25~+70℃ wide operating temperature range, complete protection features, and etc. Combined with batteries, the NTS-1700 is suitable for use in residential, commercial, marine, automobile, mine, construction site, and remote areas with no access to utility power, and the output can be used to power fans, TV, radio, phone charger, PC/laptop, lighting, induction stove, air conditioner, electromechanical tool, communication equipment, power distribution cabinet, outdoor camping equipment, marine AC power, factory equipment, and etc.

## Model Encoding

NTS - 1700 - 1 12 US

- US: AC output socket (Type US, EU, CN, AU, UK, UN, GFCI outlet)
- 12: DC input voltage (12: 12Vdc, 24: 24Vdc, 48: 48Vdc)
- 1: AC output voltage (1: 100/110/115/120Vac, 2:200/220/230/240Vac)
- 1700: Rated wattage
- NTS: Series name

MEAN WELL

# 1700W High Reliable True Sine Wave DC-AC Power Inverter NTS-1700 series

## SPECIFICATION

| MODEL NO. | | | NTS-1700-112☐ | NTS-1700-124☐ | NTS-1700-148☐ | NTS-1700-212☐ | NTS-1700-224☐ | NTS-1700-248☐ |
|---|---|---|---|---|---|---|---|---|
| | | | ☐ = US, GFCI, UN | | | ☐ = EU, CN, AU, UK, UN | | |
| AC OUTPUT | RATED POWER(Continuous) | | 1500W | | | 1700W | | |
| | OVER RATED POWER(3 Min.) | | 1750W | | | 2000W | | |
| | PEAK POWER(10 Sec.) | | 2200W | | | 2550W | | |
| | SURGE POWER(30 Cycles) | | 3000W | | | 3400W | | |
| | AC VOLTAGE | | Default setting set at 110VAC | | | Default setting set at 230VAC | | |
| | | | 100 / 110 / 115 / 120Vac selectable by DIP S.W | | | 200 / 220 / 230 / 240Vac selectable by DIP S.W | | |
| | FREQUENCY | | Default setting set at 60±0.1Hz | | | Default setting set at 50±0.1Hz | | |
| | | | 50/60Hz selectable by DIP S.W | | | 50/60Hz selectable by DIP S.W | | |
| | WAVEFORM Note.1 | | True sine wave (THD<3%) | | | | | |
| | AC REGULATION | | ±3.0% at rated output voltage | | | | | |
| | FRONT PANEL LED | | Please see page 5 | | | | | |
| DC INPUT | DC VOLTAGE | | 12Vdc | 24Vdc | 48Vdc | 12Vdc | 24Vdc | 48Vdc |
| | VOLTAGE RANGE (Typ.) | | 10 ~ 16.5Vdc | 20 ~ 33Vdc | 40 ~ 66Vdc | 10 ~ 16.5Vdc | 20 ~ 33Vdc | 40 ~ 66Vdc |
| | DC CURRENT (Typ.) | | 150A | 75A | 37.5A | 170A | 85A | 42.5A |
| | NO LOAD DISSIPATION (SAVING MODE)(Typ.) Note.2 | | Default disable, ≦1.2W ~1.5W by models @ auto detect AC output load≦10W will be changed to saving mode | | | | | |
| | | | 1.2W | 1.4W | 1.5W | 1.2W | 1.4W | 1.5W |
| | OFF MODE CURRENT DRAW | | ≦1mA | | | | | |
| | EFFICIENCY (Typ.) Note.1 | | 89% | 90% | 91% | 89% | 92% | 93% |
| | BATTERY TYPES | | Lead Acid or li-ion | | | | | |
| PROTECTION DC INPUT | FUSE (INTERNAL) | | 40A*6 | 40A*3 | 25A*3 | 40A*6 | 40A*3 | 25A*3 |
| | LOW | ALARM | 11±0.3Vdc | 22±0.5Vdc | 44±1Vdc | 11±0.3Vdc | 22±0.5Vdc | 44±1Vdc |
| | | SHUTDOWN | 10±0.3Vdc | 20±0.5Vdc | 40±1Vdc | 10±0.3Vdc | 20±0.5Vdc | 40±1Vdc |
| | | RESTART | 12.5±0.3Vdc | 25±0.5Vdc | 50±1Vdc | 12.5±0.3Vdc | 25±0.5Vdc | 50±1Vdc |
| | HIGH | ALARM | 15.5±0.3Vdc | 31±0.5Vdc | 62±1Vdc | 15.5±0.3Vdc | 31±0.5Vdc | 62±1Vdc |
| | | SHUTDOWN | 16.5±0.3Vdc | 33±0.5Vdc | 66±1Vdc | 16.5±0.3Vdc | 33±0.5Vdc | 66±1Vdc |
| | | RESTART | 15±0.3Vdc | 30±0.5Vdc | 60±1Vdc | 15±0.3Vdc | 30±0.5Vdc | 60±1Vdc |
| | BAT. POLARITY | | By internal fuse open | | | | | |
| AC OUTPUT | OVER TEMPERATURE | | Protection type : Shut down o/p voltage, re-power on to recover | | | | | |
| | OUTPUT SHORT | | Protection type : Shut down o/p voltage, re-power on to recover | | | | | |
| | OVER LOAD (Typ.) | | 105 ~ 115% load for 180 sec., 115% ~ 150% load for 10 sec. | | | | | |
| | | | Protection type : Shut down o/p voltage, re-power on to recover | | | | | |
| | CIRCUIT BREAKER (ONLY FOR "GFCI" AC SOCKET) | | 15A | | | 10A | | |
| | GFCI PROCTECTION | | UL458 (Only for "GFCI" AC socket, by request) | | None | | | |
| FUNCTION | REMOTE CONTROL | CONNECTOR | Power ON-OFF remote control by front panel dry contact connector(by RELAY), Open : Normal work ; Short : Remote off | | | | | |
| | | ACCESSORY | Remote controller sold separately, Order No.: IRC1,IRC2,IRC3 | | | | | |
| | RS-232 COMMUNICATION | | RS-232 ~ RJ11 Type connector (Please refer to page 4 for more details) | | | | | |
| ENVIRONMENT | WORKING TEMP. | | -25 ~ +70℃ (Refer to "Derating curve") | | | | | |
| | WORKING HUMIDITY | | 20% ~ 90% RH non-condensing | | | | | |
| | STORAGE TEMP., HUMIDITY | | -30 ~ +70℃ / -22 ~ +158°F, 10 ~ 95% RH non-condensing | | | | | |
| | VIBRATION | | 10 ~ 500Hz, 3G 10min./1cycle, 60min. each along X, Y, Z axes | | | | | |
| SAFETY & EMC (Note.5) | SAFETY STANDARDS | | CB IEC62368-1,Dekra BS EN/EN62368-1,UL458, E13,EAC TP TC 004,AS/NZS 62368.1 approved (Please refer to next page"AC output socket" table for more details) | | | | | |
| | WITHSTAND VOLTAGE | | DC I/P - AC O/P:3.0KVac AC O/P - FG:1.5KVac | | | | | |
| | EMC EMISSION | | Parameter | Standard | | Test Level / Note | | |
| | | | Radiated | FCC for 112,124,148 only(expect for Type-UN) | | Class A | | |
| | | | | BS EN/EN55032(CISPR32) for 212,224,248 only(expect for Type-UN) | | Class A | | |
| | | | Harmonic Current | BS EN/EN61000-3-2 | | ----- | | |
| | | | Voltage Flicker | BS EN/EN61000-3-3 | | ----- | | |
| | EMC IMMUNITY | | BS EN/EN55024, BS EN/EN55035 | | | | | |
| | | | Parameter | Standard | | Test Level / Note | | |
| | | | ESD | BS EN/EN61000-4-2 | | Level 3, 8KV air ; Level 2, 4KV contact | | |
| | | | Radiated | BS EN/EN61000-4-3 | | Level 2, 3V/m | | |
| | | | Magnetic Field | BS EN/EN61000-4-8 | | Level 1, 1A/m | | |
| OTHERS | MTBF | | 475.5K hrs min. Telcordia TR/SR-332 (Bellcore) ; 46.2K hrs min. MIL-HDBK-217F (25℃) | | | | | |
| | DIMENSION | | 400*184*70mm (L*W*H) | | | | | |
| | PACKING | | 4.63Kg; 2pcs/ 12Kg/ 1.76CUFT | | | | | |

NOTE

1.Efficiency, AC regulation and THD are tested by 1350W load, linear load at 12.5Vdc/25Vdc/50Vdc input voltage.
2.No load disspation at non-saving mode(Typ.): 112/124/148 for 16W, 212/224/248 for 29W.
3.All parameters not specified above are measured at rated load, 25℃ of ambient temperature and set to factory setting.
4.Internal pre-start circuit, the setup time is 8s.
5.The power supply is considered as an independent unit, but the final equipment still need to re-confirm that the whole system complies with the EMC directives. For guidance on how to perform these EMC tests, please refer to "EMI testing of component power supplies." (as available on https://www.meanwell.com//Upload/PDF/EMI_statement_en.pdf )
※ Product Liability Disclaimer : For detailed information, please refer to https://www.meanwell.com/serviceDisclaimer.aspx

## ■ AC Output Socket

| MODEL NO. | NTS-1700-112☐ | NTS-1700-124☐ | NTS-1700-148☐ | NTS-1700-212☐ | | NTS-1700-224☐ | | NTS-1700-248☐ | |
|---|---|---|---|---|---|---|---|---|---|
| Socket type | 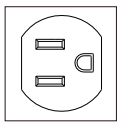 | 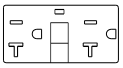 |  | 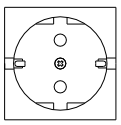 | 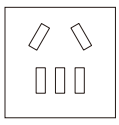 | 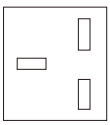 | 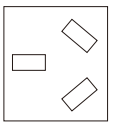 |  | |
| | TYPE-US | TYPE-GFCI | TYPE-UN | TYPE-EU | TYPE-CN | TYPE-UK | TYPE-AU | TYPE-UN | |
| | In Stock | By request | In Stock | In Stock | In Stock | By request | By request | In Stock | |
| Country | USA | USA | UNIVERSAL | EUROPE | CHINA | U.K | AUSTRALIA | UNIVERSAL | |
| Certificate | CB FC DEKRA | CB FC cULus (Except for 48V input) | None | CB E13 DEKRA EAC CE UKCA | | | CB E13 DEKRA EAC CE UKCA | E13 EAC | |

## ■ DERATING CURVE

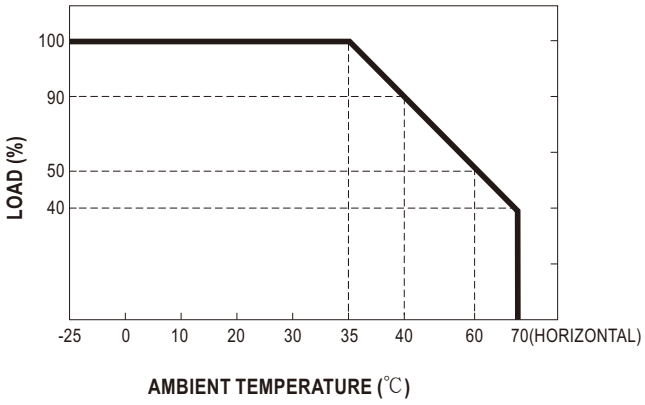


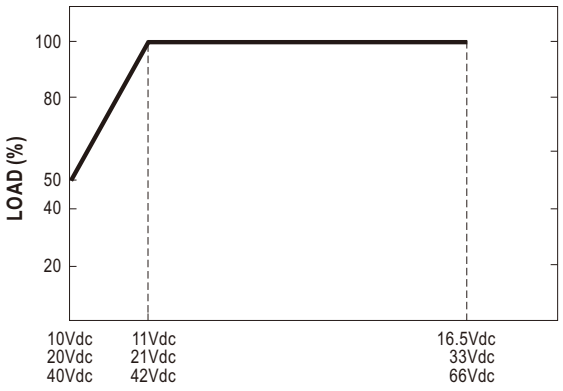

## ■ IRC1/2/3 Remote Controller (Accessory sold seperately)

- IRC1/IRC2/IRC3 is the monitoring and control unit.
- IRC1/IRC2/IRC3 can decode the RS-232 signals sent by the inverter series and display through digital meters.
  Note: Part of the control signals will not function properly due to different compliance of each model.

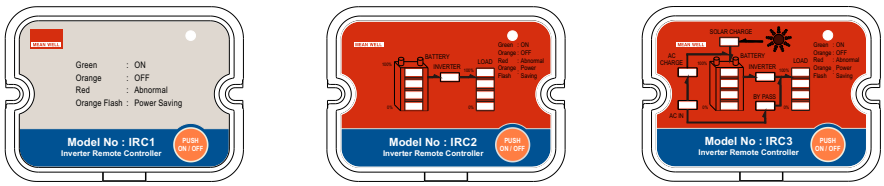


※ Please refer to for more detail: https://www.meanwell.com/webapp/product/search.aspx?prod=IRC1

## ■ Support RS-232 Communication

- The internal data of single NTS-1700 can read through RS-232.

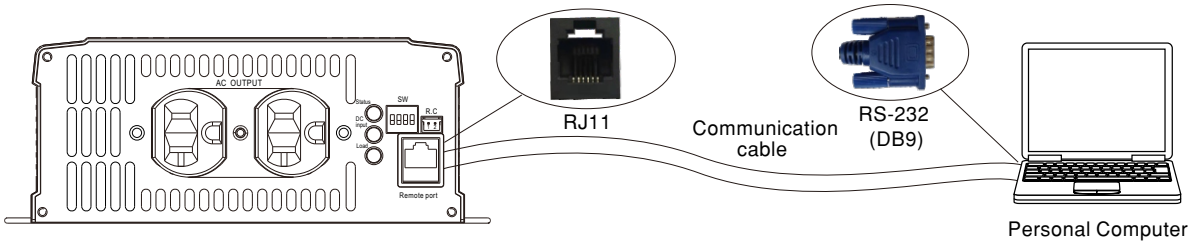


※ Please refer to for more detail: http://www.meanwell.com/manual.html

※ RJ11-RS232 Communication cable should be ordered seperately, Order No.: RJ11-RS232

## ■ Remote ON-OFF Control (Built-in)

| Remote ON-OFF | AC Output Status |
|---|---|
| Open | power inverter ON |
| Short | power inverter OFF |

## ■ AC Output Voltage、Frequency、Power saving mode selectable by DIP SW

Output voltage and frequency setting factory settings are either 110Vac/60Hz or 230Vac/50Hz, users are able to adjust the voltage and frequency, through the DIP switch of position 1,2,3,4 on the panel.

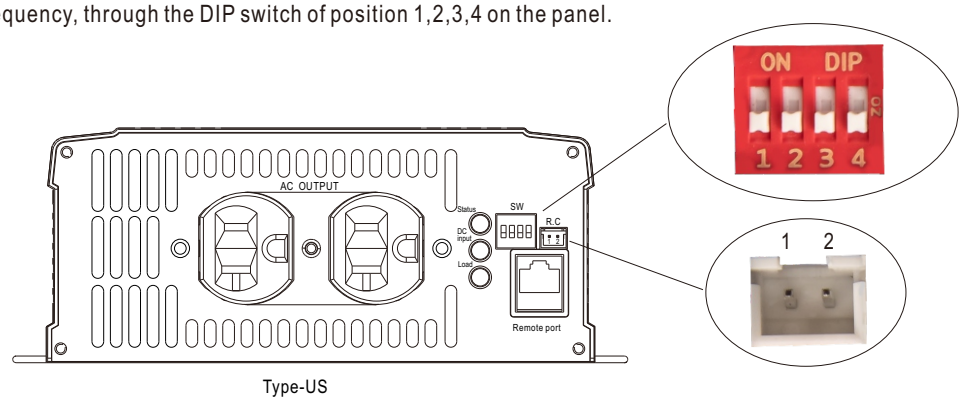


Type-US

| AC Output Voltage、 Frequency、Power saving mode selectable by DIP SW | | | |
|---|---|---|---|
| SW1 SW2 | | SW3 | SW4 |
| OFF OFF : 100Vac or 200Vac | | ON : 50Hz | ON : Saving mode |
| OFF ON : 110Vac or 220Vac | | | |
| ON OFF : 115Vac or 230Vac | | OFF: 60Hz | OFF: Non-Saving mode |
| ON ON : 120Vac or 240Vac | | | |

## ■ LED STATUS

**Normal work:**

| Status | Green | Orange | Red |
|---|---|---|---|
| | System check<br>Inverter OK | Remote off<br>Saving mode | Abnormal Status<br>(See below table) |

| DC Input | Green | Orange | Red |
|---|---|---|---|
| | 12.5~15.5Vdc<br>25~31Vdc<br>50~62Vdc | 11~12.5Vdc<br>22~25Vdc<br>44~50Vdc | <11Vdc or >15.5Vdc<br><22Vdc or >31Vdc<br><44Vdc or >62Vdc |

| Load | Green | Orange | Red |
|---|---|---|---|
| | <40% load | 40~80% load | >80% load |

**Abnormal status :**

| LED Indicator | Abnormal Indication |
|---|---|
| Status ●<br>DC Input ○<br>Load ☀ | Output overload or AC output short circuit |
| Status ●<br>DC Input ☀<br>Load ○ | Abnormal DC voltage |
| Status ●<br>DC Input ☀<br>Load ☀ | Over temperature or Fan lock |
| Status ☀<br>DC Input ○<br>Load ○ | Inverter fail |

● Light
○ Light off
☀ Flash

## ■ MECHANICAL SPECIFICATION

(Unit: mm , tolerance ± 1mm)

Case No. 286B

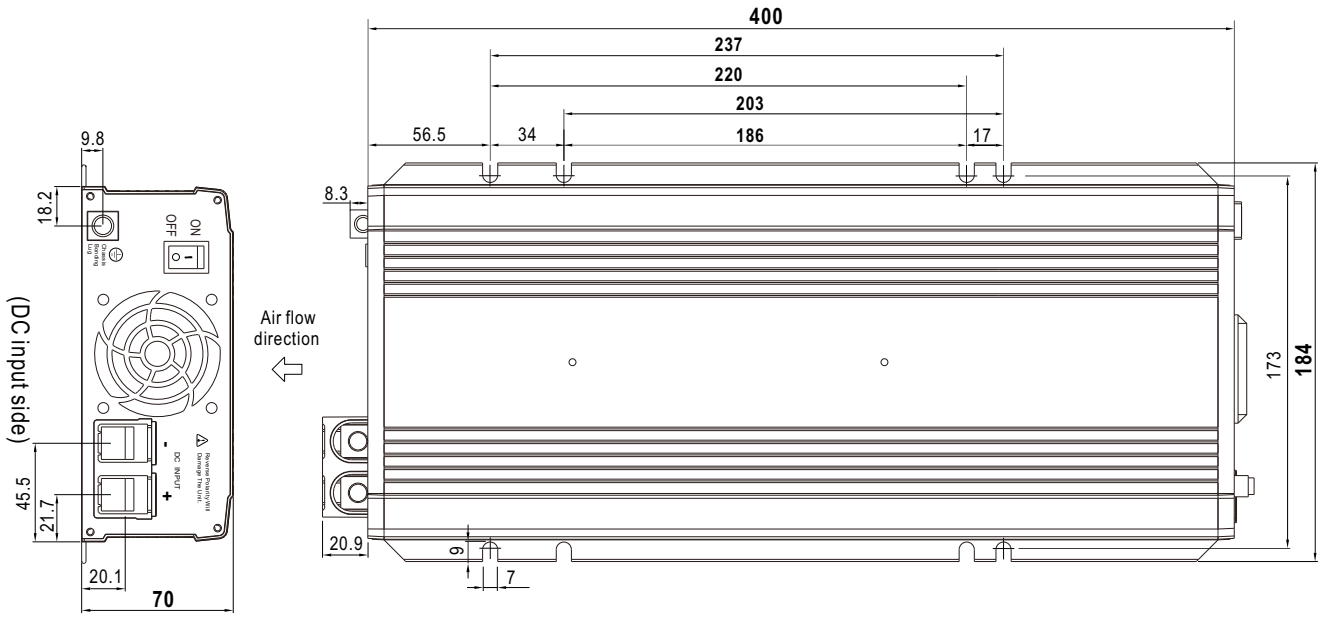


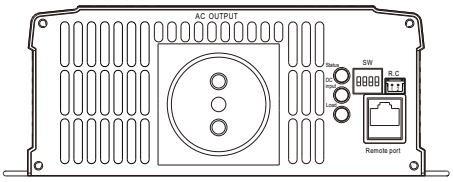


Type-EU

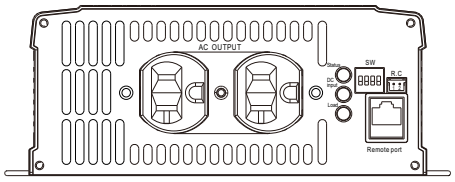


Type-US

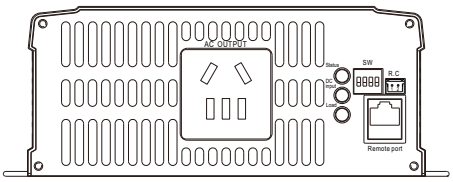


Type-CN

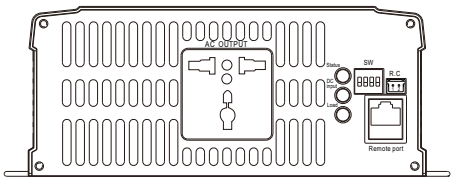


Type-UN

(AC output side)

R.C Connector : JST B-XH or equivalent

| Remote Control | Mating Housing | Terminal |
|---|---|---|
| Pin 1,2 Open: Normal work | JST XHP or equivalent | JST SXH-001T or equivalent |
| Pin 1,2 Short: Remote off | | |

Remote port connector (RJ11)



Remote port

| Assignment | Rx | GND | Tx |
|---|---|---|---|
| Remote port | 2 | 3 | 4 |
| DB9 | 3 | 5 | 2 |

## ■ Accessory List

※ Communication cable (Optional accessory, Power inverter and Communication cable should ordered seperately)

| MW's Order No. | Item | Quantity |
|---|---|---|
| RJ11-RS232 |  | 1 |

※ Carry handle (Optional accessory, Power inverter and Pull handle should ordered seperately)

| MW's Order No. | | Item | Quantity |
|---|---|---|---|
| Carry Handle | ① | Handle 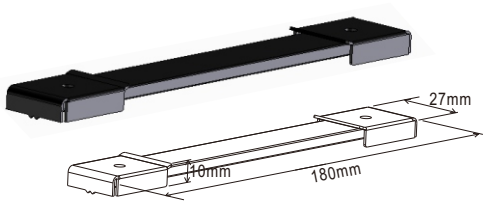  | 1 |
| | ② | Foot pad  | 4 |
| | ③ | Screw  | 2 |

① Handle

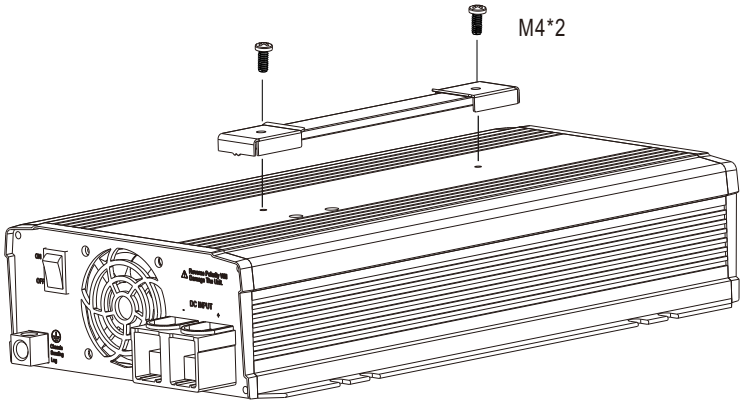


② Foot pad

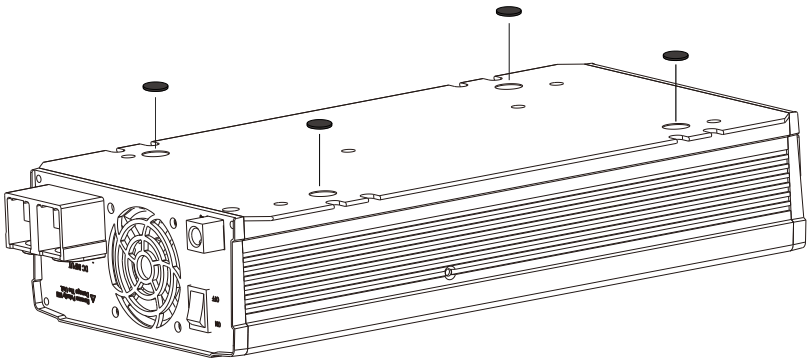

## ■ TYPICAL APPLICATION




1 Battery Bank

2 Off-Grid DC/AC Solar Inverter (NTS series)

3 AC Outlet

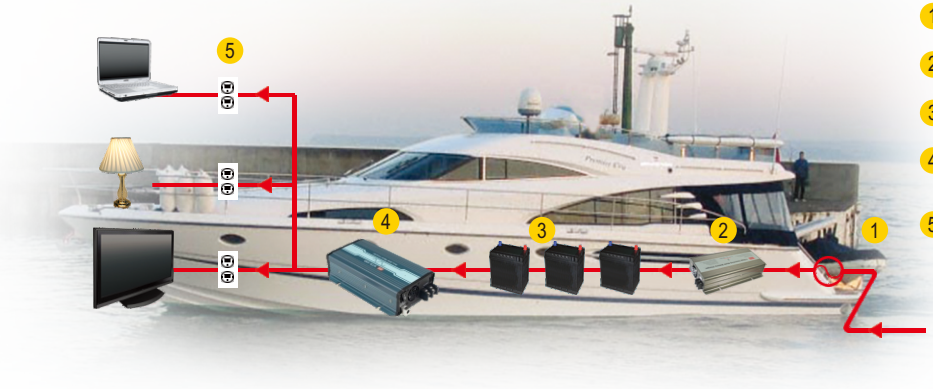


1 Utility Input (Shore)

2 AC/DC Battery Charger (PB/NPB/NPP series)

3 Battery Bank

4 Off-Grid AC/DC Power Inverter (NTS series)

5 AC Outlet

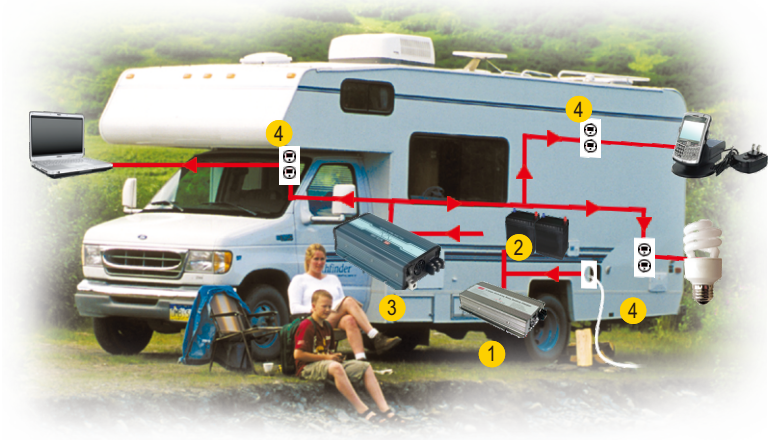


1 AC/DC Battery Charger (PB/NPB/NPP series)

2 Battery Bank

3 Off-Grid DC/AC Inverter (NTS series)

4 AC Outlet

## ■ INSTALLATION MANUAL

Please refer to : http://www.meanwell.com/manual.html