3200W High Reliable True Sine Wave Power Inverter

NTS-3200 series



DC input side



AC output side



User's Manual

Video

IEC62368-1 EN62368-1 (for 112/124/148 TB type only) UL458 TPTC004 AS/NZS 62368-1

Household Railway Car Use Marine

Please refer to page3 for more details.

Features

- True sine wave output (THD<3%)
- High surge power up to 6400W
- Temperature controlled cooling fan
- AC output voltage and frequency selectable by DIP S.W
- No load disspation **<1.7W** at standby saving mode
- -25℃~+70℃ wide operating temperature
- Power ON-OFF remote control
- Front panel indicator for operation status
- Protections :
  Input : Reverse polarity / DC. low alarm / DC low shutdown / Over voltage
  Output : Short circuit / Overload / Over temp.
- Battery over discharge protection (low voltage disconnect)
- Suitable for lead-acid or li-ion batteries
- Remote controller
  (IRC1, IRC2, IRC3 accessory sold separately, please refer to: https://www.meanwell.com/webapp/product/search.aspx?prod=IRC1)
- Support RS-232 communication(Communication cable order No.: DS-RJ11-RS232, sold sperately)
- Carry handle accessory available(Order NO.: DS-Carry handle, sold separately)
- 3 years warranty

Applications

- Home and office appliance
- Power tools
- Portable equipment
- Vehicle
- Yacht
- Off-grid solar power system

Description

NTS-3200 is a 3200W highly reliable off-grid true sine wave DC-AC power inverter. Its key features include: digital design with MCU control, streamlined control circuitry that quickly responds to environmental changes and improves reliability, high quality fan with low acoustic noise, 6400W peak power, adjustable AC output voltage and frequency, -25~+70℃ wide operating temperature range, complete protection features, and etc. Combined with batteries, the NTS-3200 is suitable for use in residential, commercial, marine, automobile, mine, construction site, and remote areas with no access to utility power, and the output can be used to power fans, TV, radio, phone charger, PC/laptop, lighting, induction stove, air conditioner, electromechanical tool, communication equipment, power distribution cabinet, outdoor camping equipment, marine AC power, factory equipment, and etc.

Model Encoding

NTS - 3200 - 1 12 US

- US: AC output socket (Type US, EU, CN, AU, UK, UN, TB outlet)
- 12: DC input voltage (12: 12Vdc, 24: 24Vdc, 48: 48Vdc)
- 1: AC output voltage (1: 100/110/115/120Vac, 2:200/220/230/240Vac)
- 3200: Rated wattage
- NTS: Series name

Preliminary

SPECIFICATION

MODEL NO.			NTS-3200-112☐	NTS-3200-124☐	NTS-3200-148☐	NTS-3200-212☐	NTS-3200-224☐	NTS-3200-248☐
			☐ = US, UN, TB			☐ = EU, CN, AU, UK, UN, TB		
AC OUTPUT	RATED POWER(Continuous)		3000W			3200W		
	OVER RATED POWER(3 Min.)		3500W			3680W		
	PEAK POWER(10 Sec.)		4500W			4800W		
	SURGE POWER(30 Cycles)		6000W			6400W		
	AC VOLTAGE		Factory setting set at 110VAC			Factory setting set at 230VAC		
			100 / 110 / 115 / 120Vac selectable by DIP S.W			200 / 220 / 230 / 240Vac selectable by DIP S.W		
	FREQUENCY		Factory setting set at 60±0.1Hz			Factory setting set at 50±0.1Hz		
			50/60Hz selectable by DIP S.W			50/60Hz selectable by DIP S.W		
	WAVEFORM Note.1		True sine wave (THD<3%)					
	AC REGULATION		±3.0% at rated input voltage					
	FRONT PANEL LED		Please see page 5					
DC INPUT	DC VOLTAGE		12Vdc	24Vdc	48Vdc	12Vdc	24Vdc	48Vdc
	VOLTAGE RANGE (Typ.)		10 ~ 16.5Vdc	20 ~ 33Vdc	40 ~ 66Vdc	10 ~ 16.5Vdc	20 ~ 33Vdc	40 ~ 66Vdc
	DC CURRENT (Typ.)		300A	150A	75A	320A	160A	80A
	NO LOAD DISSPATION (SAVING MODE)(Typ.) Note.2		Default disable, auto detect AC output load≦10W will be changed to saving mode					
			1.7W					
	OFF MODE CURRENT DRAW		≦2mA					
	EFFICIENCY (Typ.) Note.1		89%	90%	91%	90%	92%	93%
	BATTERY TYPES		Lead Acid or li-ion					
PROTECTION DC INPUT	FUSE (INTERNAL)		40A*12	40A*6	25A*6	40A*12	40A*6	25A*6
	LOW	ALARM	11±0.3Vdc	22±0.5Vdc	44±1Vdc	11±0.3Vdc	22±0.5Vdc	44±1Vdc
		SHUTDOWN	10±0.3Vdc	20±0.5Vdc	40±1Vdc	10±0.3Vdc	20±0.5Vdc	40±1Vdc
		RESTART	12.5±0.3Vdc	25±0.5Vdc	50±1Vdc	12.5±0.3Vdc	25±0.5Vdc	50±1Vdc
	HIGH	ALARM	15.5±0.3Vdc	31±0.5Vdc	62±1Vdc	15.5±0.3Vdc	31±0.5Vdc	62±1Vdc
		SHUTDOWN	16.5±0.3Vdc	33±0.5Vdc	66±1Vdc	16.5±0.3Vdc	33±0.5Vdc	66±1Vdc
		RESTART	15±0.3Vdc	30±0.5Vdc	60±1Vdc	15±0.3Vdc	30±0.5Vdc	60±1Vdc
	BAT. POLARITY		By internal fuse open					
PROTECTION AC OUTPUT	OVER TEMPERATURE		Protection type : Shut down o/p voltage, re-power on to recover					
	OUTPUT SHORT		Protection type : Shut down o/p voltage, re-power on to recover					
	OVER LOAD (Typ.)		105 ~ 115% load for 180 sec., 115% ~ 150% load for 10 sec.					
			Protection type : Shut down o/p voltage, re-power on to recover					
	TB TYPE		UL458 (Only for "TB" type AC socket)			None		
FUNCTION	REMOTE CONTROL	CONNECTOR	Power ON-OFF remote control by front panel dry contact connector(by RELAY), Open : Normal work ; Short : Remote off					
		ACCESSORY	Remote controller sold separately, Order No.: IRC1,IRC2,IRC3					
	RS-232 COMMUNICATION		RS-232 ~ RJ11 Type connector (Please refer to page 4 for more details)					
ENVIRONMENT	WORKING TEMP.		-25 ~ +70℃ (Refer to "Derating curve")					
	WORKING HUMIDITY		20% ~ 90% RH non-condensing					
	STORAGE TEMP., HUMIDITY		-30 ~ +70℃ / -22 ~ +158℉, 10 ~ 95% RH non-condensing					
	VIBRATION		10 ~ 500Hz, 3G 10min./1cycle, 60min. each along X, Y, Z axes					
SAFETY & EMC (Note.5)	SAFETY STANDARDS		CB IEC62368-1,Dekra Seal BS EN/EN62368-1,UL458, E13,EAC TP TC 004,AS/NZS 62368-1 approved (Please refer to next page"AC output socket" table for more details)					
	WITHSTAND VOLTAGE		DC I/P - AC I/P:3.0KVAC DC I/P - AC O/P:3.0KVAC AC O/P - FG:1.5KVAC					
	EMC EMISSION		Parameter	Standard		Test Level / Note		
			Radiated	FCC for 112,124,148 only(expect for Type-UN)		Class A		
				BS EN/EN55032(CISPR32) for 212,224,248 only(expect for Type-UN)		Class A		
			Harmonic Current	BS EN/EN61000-3-2		-----		
			Voltage Flicker	BS EN/EN61000-3-3		-----		
	EMC IMMUNITY		BS EN/EN55024, BS EN/EN55035					
			Parameter	Standard		Test Level / Note		
			ESD	BS EN/EN61000-4-2		Level 3, 8KV air ; Level 2, 4KV contact		
			Radiated	BS EN/EN61000-4-3		Level 2, 3V/m		
			Magnetic Field	BS EN/EN61000-4-8		Level 1, 1A/m		
OTHERS	MTBF		336.9K hrs min. Telcordia TR/SR-332 (Bellcore) ; 30.5K hrs min. MIL-HDBK-217F (25℃)					
	DIMENSION		440*270*98mm (L*W*H)					
	PACKING		8.6Kg; 1pcs/ 10.4Kg/ 1.39CUFT					

NOTE

1.Efficiency, AC regulation and THD are tested by 2400W load, linear load at 12.5Vdc/25Vdc/50Vdc input voltage.
2.No load disspation at non-saving mode(Typ.): 112/124/148 for 25W, 212/224/248 for 55W.
3.All parameters not specified above are measured at rated load, 25℃ of ambient temperature and set to factory setting.
4.Internal pre-start circuit, the setup time is 8s.
5.The power supply is considered as an independent unit, but the final equipment still need to re-confirm that the whole system complies with the EMC directives. For guidance on how to perform these EMC tests, please refer to "EMI testing of component power supplies." (as available on http://www.meanwell.com)
※ Product Liability Disclaimer : For detailed information, please refer to https://www.meanwell.com/serviceDisclaimer.aspx

■ AC Output Socket

MODEL NO.	NTS-3200-112 ☐	NTS-3200-124 ☐	NTS-3200-148 ☐
Socket type	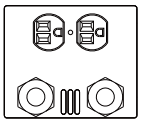	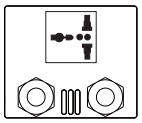	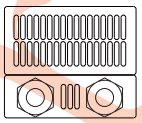
	TYPE-US	TYPE-UN	TYPE-TB
	In Stock	In Stock	In Stock
Country	USA	UNIVERSAL	UNIVERSAL
Certificate	CB FC DEKRA	None	CB FC cULus DEKRA

MODEL NO.	NTS-3200-212 ☐		NTS-3200-224 ☐		NTS-3200-248 ☐	
Socket type	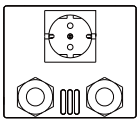	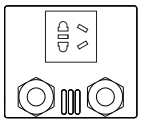	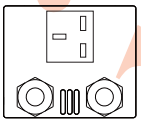	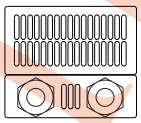	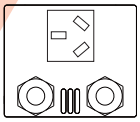	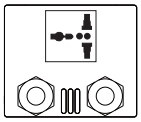
	TYPE-EU	TYPE-CN	TYPE-UK	TYPE-TB	TYPE-AU	TYPE-UN
	In Stock	In Stock	By request	In Stock	By request	In Stock
Country	EUROPE	CHINA	U.K	UNIVERSAL	AUSTRALIA	UNIVERSAL
Certificate	CB E13 DEKRA EAC CE UKCA				CB E13 DEKRA EAC CE UKCA	E13 EAC

■ DERATING CURVE

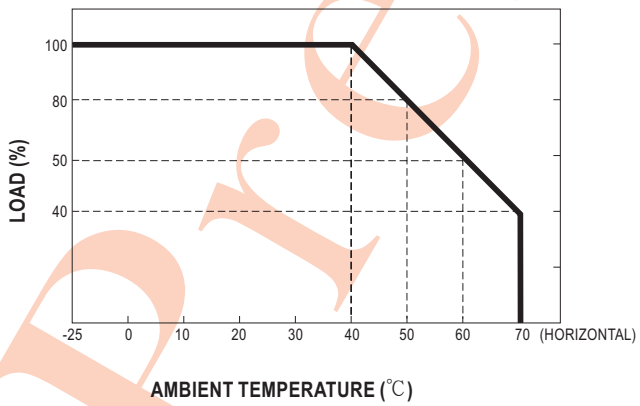

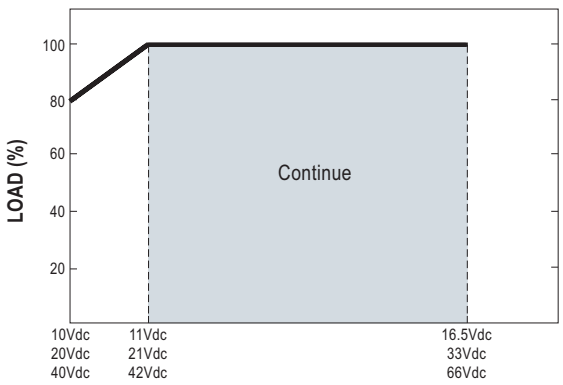

Preliminary

■ IRC1/2/3 Remote Controller (Accessory sold seperately)

- IRC1/IRC2/IRC3 is the monitoring and control unit.
- IRC1/IRC2/IRC3 can decode the RS-232 signals sent by the inverter series and display through digital meters.
  Note: Part of the control signals will not function properly due to different compliance of each model.

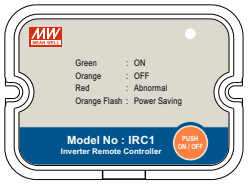

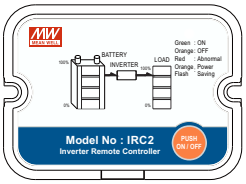

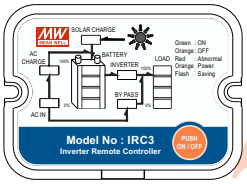

※ Please refer to for more detail: https://www.meanwell.com/webapp/product/search.aspx?prod=IRC1

■ Support RS-232 Communication

- The internal data of single NTS-3200 can read through RS-232.

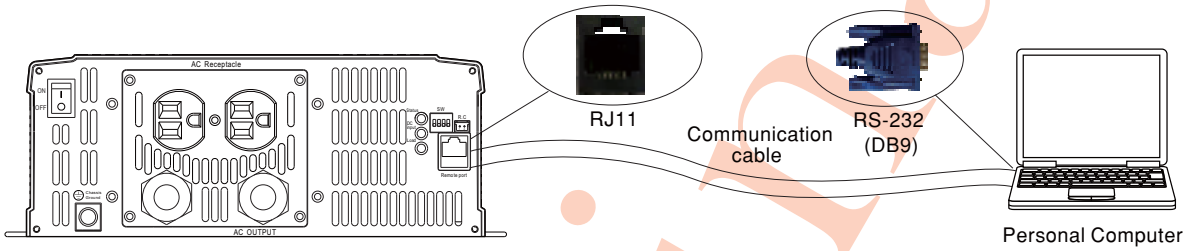

※ Please refer to for more detail: http://www.meanwell.com/manual.html

※ RJ11-RS232 Communication cable should be ordered seperately, Order No.: DS-RJ11-RS232

■ Remote ON-OFF Control (Built-in)

Remote ON-OFF	AC Output Status
Open	power inverter ON
Short	power inverter OFF

■ AC Output Voltage、Frequency、Power saving mode selectable by DIP SW

Output voltage and frequency setting factory settings are either 110Vac/60Hz or 230Vac/50Hz, users are able to adjust the voltage and frequency, through the DIP switch of position 1,2,3,4 on the panel.

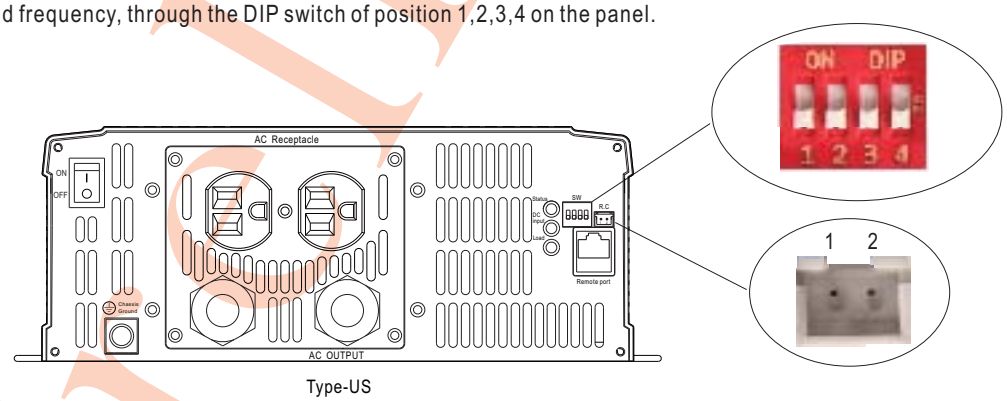

Type-US

AC Output Voltage、 Frequency、Power saving mode selectable by DIP SW			
SW1 SW2		SW3	SW4
OFF	OFF : 100Vac or 200Vac	ON : 50Hz	ON : Saving mode
OFF	ON : 110Vac or 220Vac		
ON	OFF : 115Vac or 230Vac	OFF: 60Hz	OFF: Non-Saving mode
ON	ON : 120Vac or 240Vac		

Preliminary

■ LED STATUS

Normal work:

Status	Green	Orange	Red
	● Inverter OK	● Remote off ☀ Saving mode	● Abnormal Status (See below table)

DC Input	Green	Orange	Red
	● 12.5~15.5Vdc ● 25~31Vdc ● 50~62Vdc	● 11~12.5Vdc ● 22~25Vdc ● 44~50Vdc	● <11Vdc or >15.5Vdc ● <22Vdc or >31Vdc ● <44Vdc or >62Vdc

Load	Green	Orange	Red
	● <40% load	● 40~80% load	● >80% load

Abnormal status :

LED Indicator	Abnormal Indication
Status ● DC Input ○ Load ☀	Output overload or AC output short circuit
Status ● DC Input ☀ Load ○	Abnormal DC voltage
Status ● DC Input ☀ Load ☀	Over temperature or Fan lock
Status ☀ DC Input ○ Load ○	Inverter fail

● Light
○ Light off
☀ Flash

Preliminary

■ MECHANICAL SPECIFICATION

Unit:mm

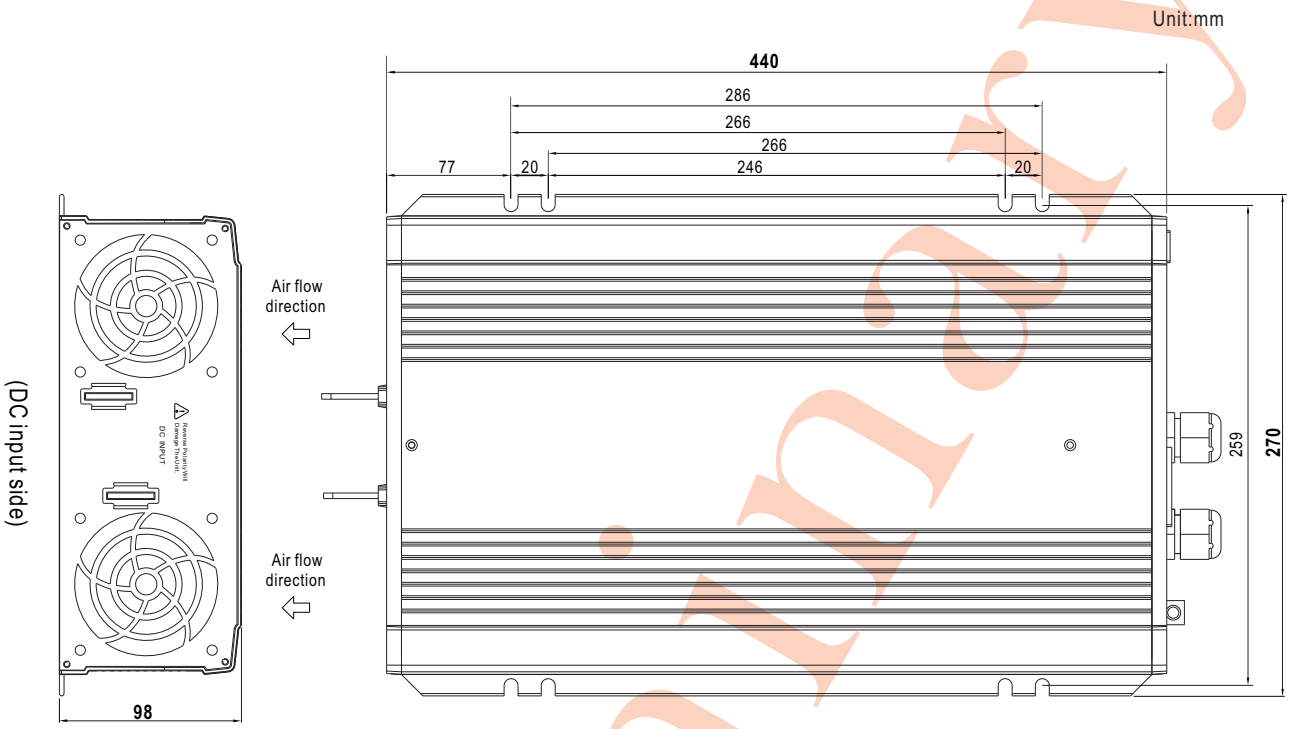

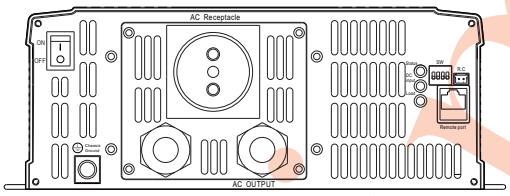

Type-EU

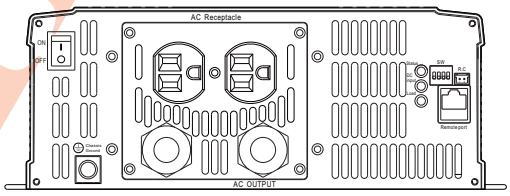

Type-US

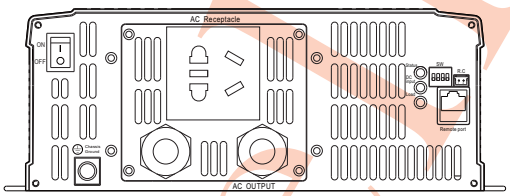

Type-CN

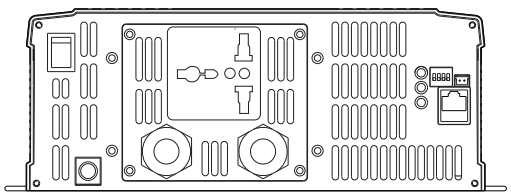

Type-UN

(AC output side)

R.C Connector : JST B-XH or equivalent

Remote Control	Mating Housing	Terminal
Pin 1,2 Open: Normal work	JST XHP or equivalent	JST SXH-001T or equivalent
Pin 1,2 Short: Remote off		

Remote port connector (RJ11)



Remote port

Assignment	Rx	GND	Tx
Remote port	2	3	4
DB9	3	5	2

Directions for use TB socket

Socket type	Withstand Current	Note
US	15A	When the load current is over withstand current, must use output terminal connection which can be found inside the AC output panel of the inverter.
EU	16A	
CN	10A	
UN	16A	
UK	13A	
AU	10A	

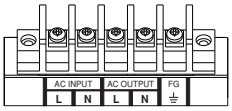

Preliminary

■ Accessory List

※ Communication cable (Optional accessory, Power inverter and Communication cable should ordered seperately)

MW's Order No.	Item	Quantity
DS-RJ11-RS232		1

※ Carryl handle (Optional accessory, Power inverter and Pull handle should ordered seperately)

MW's Order No.		Item	Quantity
DS-Carry Handle	①	Handle 	1
	②	Foot pad 	4
	③	Screw 	2

① Handle

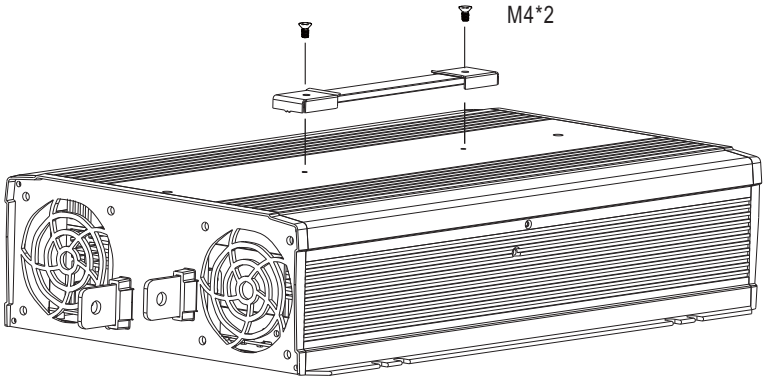

② Foot pad

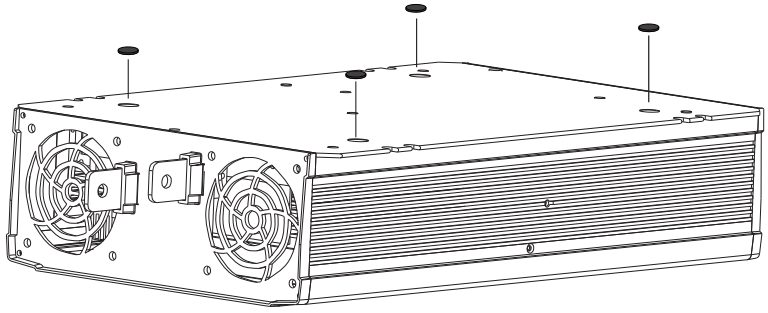

■ TYPICAL APPLICATION



1 Battery Bank
2 Off-Grid DC/AC Solar Inverter (NTS series)
3 AC Outlet



1 Utility Input (Shore)
2 AC/DC Battery Charger (PB/NPB/NPP series)
3 Battery Bank
4 Off-Grid AC/DC Power Inverter (NTS series)
5 AC Outlet

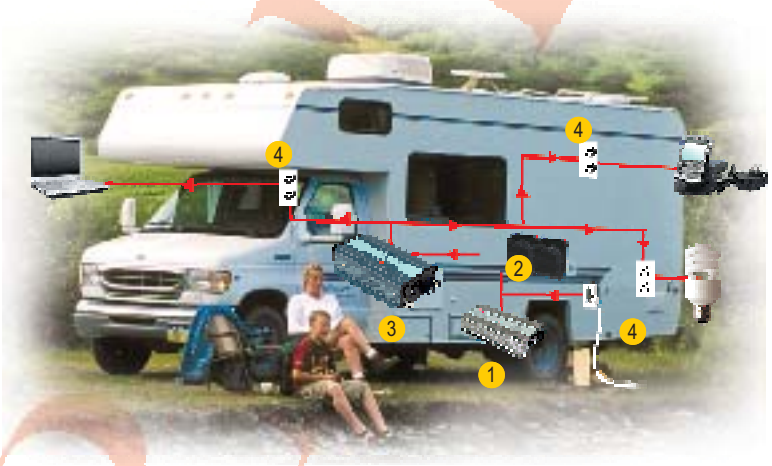

1 AC/DC Battery Charger (PB/NPB/NPP series)
2 Battery Bank
3 Off-Grid DC/AC Inverter (NTS series)
4 AC Outlet

■ INSTALLATION MANUAL

Please refer to : http://www.meanwell.com/manual.html

Preliminary