RoHS
Available on commercial versions

500 mW Metallurgically Bonded Glass Zener Diodes

Qualified per MIL-PRF-19500/435

Qualified Levels:
JAN, JANTX, JANTXV and JANS

DESCRIPTION

The 1N4099-1 through 1N4135-1 and 1N4614-1 through 1N4627-1 series are 500 mW, Zener voltage regulators in the axial-leaded, glass DO-35 package. Voltages from 1.8 to 100V in 5%, 2%, and 1% tolerances are available. They are constructed with an internal metallurgical bond and are mil-qualified up to the JANS level for high reliability applications.

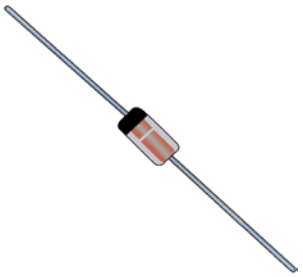

DO-35 (DO-204AH) Package

Important: For the latest information, visit our website http://www.microsemi.com.

FEATURES

- JEDEC registered 1N4099 through 1N4135 and 1N4614 through 1N4627 series.
- Internal metallurgical bond.
- Max noise density 40 µV / √Hz for 6.8 V and up. Falls quickly to 1 µV / √Hz at lower voltages.
- JAN, JANTX, JANTXV and JANS qualifications are available per MIL-PRF-19500/435.
- RoHS compliant versions available (commercial grade only).

APPLICATIONS / BENEFITS

- Flexible axial-lead mounting terminals.
- Regulates voltage over broad ranges of current and temperature.
- Extensive selection from 1.8 to 100 volts.
- Voltage tolerances of 5% (standard), 2% and 1% are available.
- Hermetically sealed surface mount package.
- Non-sensitive to ESD per MIL-STD-750 method 1020.
- Minimal capacitance (see Figure 3).
- Inherently radiation hard as described in Microsemi MicroNote 050.

MAXIMUM RATINGS @ T_C = +25 ºC unless otherwise specified

Parameters/Test Conditions	Symbol	Value	Unit
Junction and Storage Temperature	T_J and T_{STG}	-65 to +175	°C
Thermal Resistance Junction-to-Ambient (1)	$R_{\Theta JA}$	300	°C/W
Thermal Resistance Junction-to-Lead @ 3/8 (10 mm) lead length from body	$R_{\Theta JL}$	250	°C/W
Rated Average Power Dissipation (2)	$P_{M(AV)}$	0.5	W
Forward Voltage @ 200 mA	V_F	1.1	V
Solder Temperature @ 10 s		260	°C

Notes:
1. When mounted on FR4 PC board (1 oz Cu) with 4 mm^2 copper pads and track width 1 mm, length 25 mm.
2. The 0.5 W should be linearly derated starting at T_L = 50 °C and goes to zero at 175 °C. For ambient T_A condition on a typical PC board, it linearly derates from 500 mW starting at 25 °C and goes to zero at 175 °C (see Figure 2).

Also available in:

DO-213AA package
(surface mount)
1N4099UR-1 – 1N4135UR-1 and
1N4614UR-1 – 1N4627UR-1

DO-216 package
(tabbed surface mount)
1PMT4099 – 1PMT4135 and
1PMT4614 – 1PMT4627

MSC – Lawrence
6 Lake Street,
Lawrence, MA 01841
Tel: 1-800-446-1158 or
(978) 620-2600
Fax: (978) 689-0803

MSC – Ireland
Gort Road Business Park,
Ennis, Co. Clare, Ireland
Tel: +353 (0) 65 6840044
Fax: +353 (0) 65 6822298

Website:
www.microsemi.com

©2013 Microsemi Corporation

MECHANICAL and PACKAGING

- CASE: Hermetically sealed axial-lead glass DO-35 (DO-204AH) style package.
- TERMINALS: Tin-lead or RoHS compliant annealed matte-tin (on commercial grade only) plating. Solderable per MIL-STD-750, method 2026.
- POLARITY: Cathode indicated by band. The diode is to be operated with the banded end positive with respect to the opposite end for Zener regulation.
- MARKING: Part number.
- TAPE & REEL option: Standard per EIA-296 (add "TR" suffix to part number). Consult factory for quantities.
- WEIGHT: Approximately 0.2 grams.
- See Package Dimensions on last page.

PART NOMENCLATURE

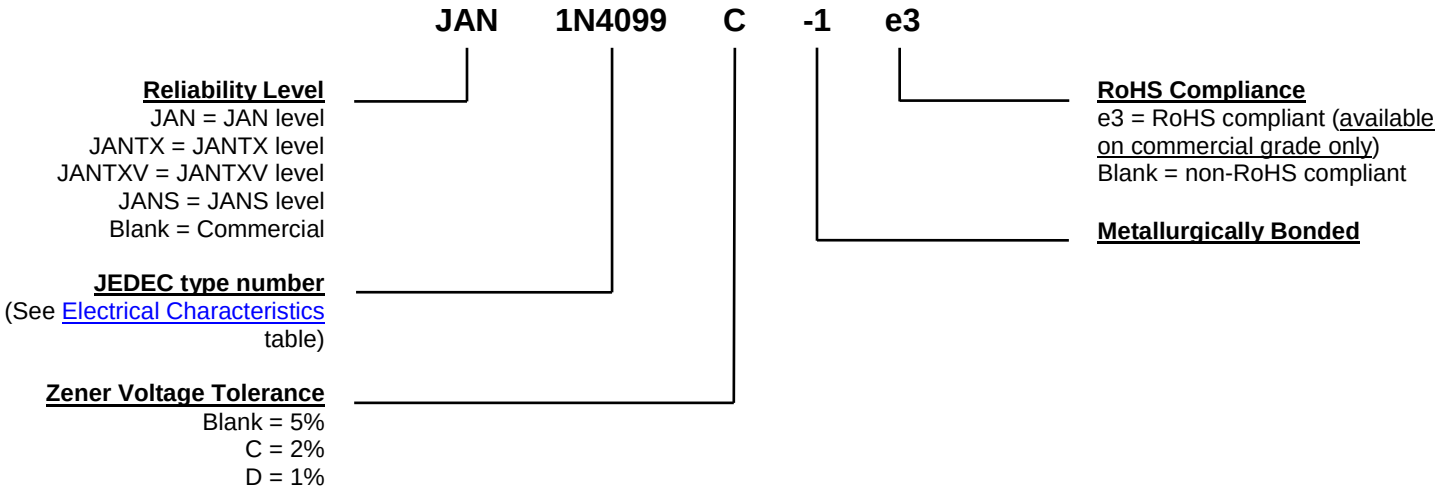

SYMBOLS & DEFINITIONS

Symbol	Definition
α_{VZ}	Temperature Coefficient of Regulator Voltage: The change in regulator voltage divided by the change in temperature that caused it expressed in %/C or mV/°C.
I_R	Reverse Current: The maximum reverse (leakage) current that will flow at the specified voltage and temperature.
I_Z, I_{ZT}, I_{ZK}	Regulator Current: The dc regulator current (I_Z), at a specified test point (I_{ZT}), near breakdown knee (I_{ZK}).
I_{ZM}	Maximum Regulator (Zener) Current: The maximum rated dc current for the specified power rating.
N_D	Noise Density: The noise generated over a specified frequency bandwidth usually specified in terms of mV/ √Hz.
V_R	Reverse Voltage: The reverse voltage dc value, no alternating component.
V_Z	Zener Voltage: The Zener voltage the device will exhibit at a specified current (I_Z) in its breakdown region.
Z_{ZT} or Z_{ZK}	Dynamic Impedance: The small signal impedance of the diode when biased to operate in its breakdown region at a specified rms current modulation (typically 10% of I_{ZT} or I_{ZK}) and superimposed on I_{ZT} or I_{ZK} respectively.

©2013 Microsemi Corporation

ELECTRICAL CHARACTERISTICS @ 25 °C unless otherwise stated

INDUSTRY PART NUMBER* (Note 1)	NOMINAL ZENER VOLTAGE V_Z @ I_{ZT} (Note 2)	ZENER TEST CURRENT I_{ZT}	MAXIMUM ZENER IMPEDANCE Z_{ZT} (Note 3)	MAXIMUM REVERSE CURRENT I_R @ V_R		MAXIMUM NOISE DENSITY N_D @ I_{ZT}	MAXIMUM ZENER CURRENT I_{ZM}	MAXIMUM TEMP. COEFF. OF ZENER VOLTAGE α_{VZ}
	Volts	µA	Ohms	µA	Volts	µV/√Hz	mA	%/°C
1N4614-1	1.8	250	1200	3.5	1.0	1	120.0	-0.075
1N4615-1	2.0	250	1250	2.5	1.0	1	110.0	-0.075
1N4616-1	2.2	250	1300	2.0	1.0	1	100.0	-0.075
1N4617-1	2.4	250	1400	1.0	1.0	1	95.0	-0.075
1N4618-1	2.7	250	1500	0.5	1.0	1	90.0	-0.075
1N4619-1	3.0	250	1600	0.4	1.0	1	87.0	-0.075
1N4620-1	3.3	250	1650	3.5	1.5	1	85.0	-0.075
1N4621-1	3.6	250	1700	3.5	2.0	1	83.0	-0.065
1N4622-1	3.9	250	1650	2.5	2.0	1	80.0	-0.060
1N4623-1	4.3	250	1600	2.0	2.0	1	77.0	-0.050
1N4624-1	4.7	250	1550	5.0	3.0	1	75.0	-0.050,+0.020
1N4625-1	5.1	250	1500	5.0	3.0	2	70.0	-0.045,+0.030
1N4626-1	5.6	250	1400	5.0	4.0	4	65.0	-0.020,+0.040
1N4627-1	6.2	250	1200	5.0	5.0	5	61.0	-0.010,+0.050
1N4099-1	6.8	250	200	1.0	5.2	40	56.0	+0.060
1N4100-1	7.5	250	200	1.0	5.7	40	51.0	+0.065
1N4101-1	8.2	250	200	0.5	6.3	40	46.0	+0.070
1N4102-1	8.7	250	200	0.5	6.7	40	44.0	+0.075
1N4103-1	9.1	250	200	0.5	7.0	40	42.0	+0.080
1N4104-1	10.0	250	200	0.5	7.6	40	38.0	+0.080
1N4105-1	11.0	250	200	0.05	8.5	40	35.0	+0.080
1N4106-1	12.0	250	200	0.05	9.2	40	32.0	+0.080
1N4107-1	13.0	250	200	0.05	9.9	40	29.0	+0.080
1N4108-1	14.0	250	200	0.05	10.7	40	27.0	+0.085
1N4109-1	15.0	250	100	0.05	11.4	40	25.0	+0.085
1N4110-1	16.0	250	100	0.05	12.2	40	24.0	+0.085
1N4111-1	17.0	250	100	0.05	13.0	40	22.0	+0.090
1N4112-1	18.0	250	100	0.05	13.7	40	21.0	+0.090
1N4113-1	19.0	250	150	0.05	14.5	40	20.0	+0.090
1N4114-1	20.0	250	150	0.01	15.2	40	19.0	+0.090
1N4115-1	22.0	250	150	0.01	16.8	40	17.0	+0.090
1N4116-1	24.0	250	150	0.01	18.3	40	16.0	+0.090
1N4117-1	25.0	250	150	0.01	19.0	40	15.0	+0.090
1N4118-1	27.0	250	150	0.01	20.5	40	14.0	+0.090
1N4119-1	28.0	250	200	0.01	21.3	40	14.0	+0.095
1N4120-1	30.0	250	200	0.01	22.8	40	13.0	+0.095
1N4121-1	33.0	250	200	0.01	25.1	40	12.0	+0.095
1N4122-1	36.0	250	200	0.01	27.4	40	11.0	+0.095
1N4123-1	39.0	250	200	0.01	29.7	40	9.8	+0.095
1N4124-1	43.0	250	250	0.01	32.7	40	8.9	+0.095
1N4125-1	47.0	250	250	0.01	35.8	40	8.1	+0.095
1N4126-1	51.0	250	300	0.01	38.8	40	7.5	+0.100
1N4127-1	56.0	250	300	0.01	42.6	40	6.7	+0.100
1N4128-1	60.0	250	400	0.01	45.6	40	6.4	+0.100
1N4129-1	62.0	250	500	0.01	47.1	40	6.1	+0.100
1N4130-1	68.0	250	700	0.01	51.7	40	5.6	+0.100
1N4131-1	75.0	250	700	0.01	57.0	40	5.1	+0.100
1N4132-1	82.0	250	800	0.01	62.4	40	4.6	+0.100
1N4133-1	87.0	250	1000	0.01	66.2	40	4.4	+0.100
1N4134-1	91.0	250	1200	0.01	69.2	40	4.2	+0.100
1N4135-1	100.0	250	1600	0.01	76.0	40	3.8	+0.100

***JEDEC Registered Data.**

SEE NOTES ON NEXT PAGE.

©2013 Microsemi Corporation

NOTE 1: The JEDEC type numbers shown in the prior table have a standard tolerance of +/-5% on the nominal Zener voltage. V_Z is measured with the diode in thermal equilibrium (still air) at 25 °C.

NOTE 2: Zener impedance is derived by superimposing on I_{ZT} a 60 Hz rms ac current at 10% of I_{ZT} (25 μA). See MicroNote 202 for Zener impedance variation with different operating currents.

NOTE 3: Based upon 400 mW maximum power dissipation at 25 ºC lead temperature, allowance has been made for the higher voltage associated with operation at higher currents.

GRAPHS

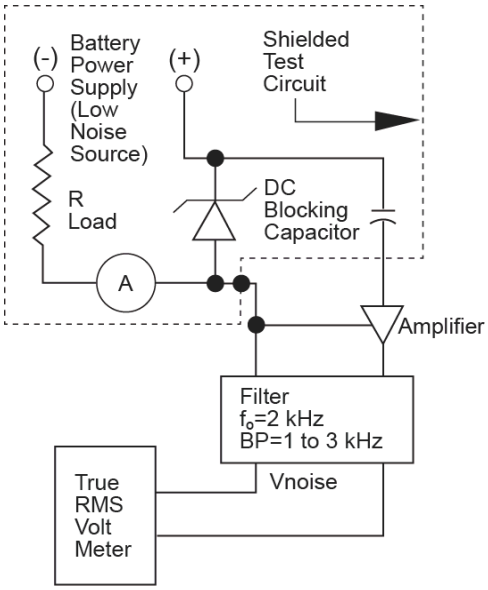

FIGURE 1 – Noise Density Measurement Circuit

Noise density, (N_D) is specified in microvolt-rms per square-root-hertz. Actual measurement is performed using a 1 KHz to 3 KHz frequency bandpass filter at a constant Zener test current (I_{ZT}) at 25 °C ambient temperature. N_D is calculated from the formula.

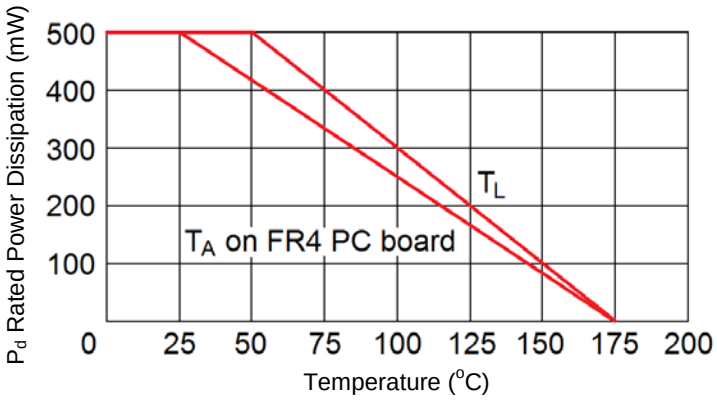

FIGURE 2 – Power Derating Curve

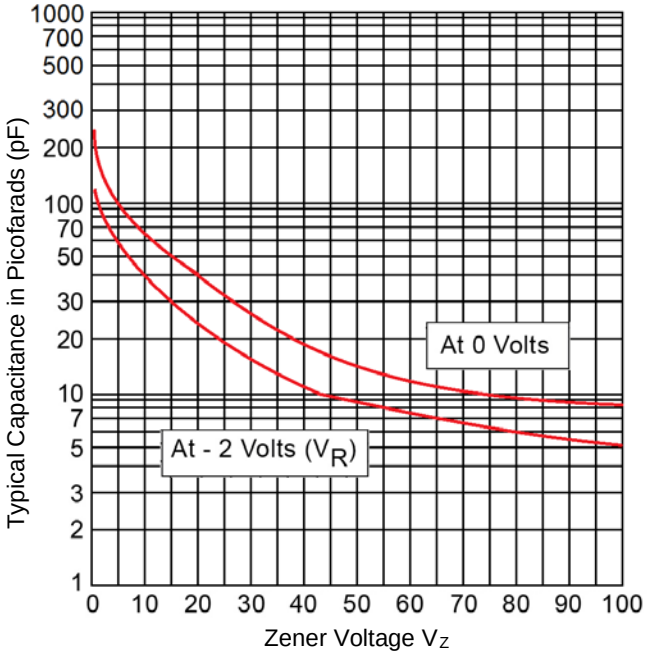

FIGURE 3 – Capacitance vs. Zener Voltage (Typical)

©2013 Microsemi Corporation

PACKAGE DIMENSIONS

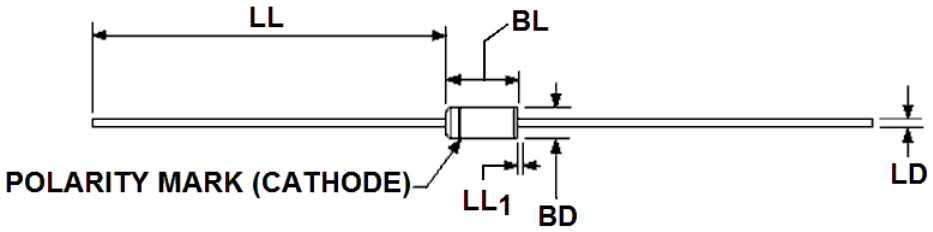

Ltr	Dimensions				Notes
	Inches		Millimeters		
	Min	Max	Min	Max	
BD	0.056	0.090	1.42	2.29	3
BL	0.140	0.200	3.56	5.08	3
LD	0.018	0.022	0.46	0.56	
LL	1.000	1.500	25.40	38.10	
LL_1	-	0.050	-	1.27	4

NOTES:

1. Dimensions are in inches.
2. Millimeters are given for information only.
3. Package contour optional within BD and length BL. Heat slugs, if any, shall be included within this cylinder but shall not be subject to minimum limit of BD. The BL dimension shall include the entire body including slugs.
4. Within this zone lead, diameter may vary to allow for lead finishes and irregularities other than heat slugs.
5. In accordance with ASME Y14.5M, diameters are equivalent to Φx symbology.

©2013 Microsemi Corporation