Microsemi
SCOTTSDALE DIVISION

1N5221 thru 1N5281B, e3 DO-35

500 mW GLASS AXIAL-LEAD ZENER DIODES

ALSO AVAILABLE IN SURFACE MOUNT

DESCRIPTION

The popular 1N5221 thru 1N5281B series of 0.5 watt Zener Voltage Regulators provides a selection from 2.4 to 200 volts in standard 5% or 10% tolerances as well as tighter tolerances identified by different suffix letters on the part number. These glass axial-leaded DO-35 Zeners are also available in various military screening levels by adding a prefix identifier as described in the Features section. Microsemi also offers numerous other Zener products to meet higher and lower power applications.

APPEARANCE

DO-35
(DO-204AH)

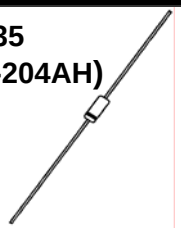

IMPORTANT: For the most current data, consult *MICROSEMI's* website: http://www.microsemi.com

FEATURES

- JEDEC registered 1N5221 to 1N5281B
- Internal bonds optionally available with "-1" suffix
- Options for screening in accordance with MIL-PRF-19500 for JAN, JANTX, JANTXV, and JANS are available by adding MQ, MX, MV, or MSP prefixes respectively to part numbers with "-1" suffix.
- Surface mount equivalents available as MLL5221 to MLL5281B in the DO-213AA MELF style package including "-1" suffix options (consult factory for others)
- RoHS Compliant devices available by adding "e3" suffix
- DO-7 glass body axial-leaded Zener equivalents are also available

APPLICATIONS / BENEFITS

- Regulates voltage over a broad operating current and temperature range
- Extensive selection from 2.4 to 200 V
- Standard voltage tolerances are plus/minus 5% with B suffix, 10 % with A suffix identification
- Tight tolerances available in plus or minus 2% or 1% with C or D suffix respectively
- Flexible axial-lead mounting terminals
- Nonsensitive to ESD (MIL-STD-750 Method 1020)
- Minimal capacitance (see Figure 2)
- Inherently radiation hard per MicroNote 050

MAXIMUM RATINGS

- Power dissipation at 25°C: 0.5 watts (also see derating in Figure 1).
- Operating and Storage temperature: -65°C to +175°C
- Thermal Resistance: 250 °C/W junction to lead at 3/8 (10 mm) lead length from body, or 310°C/W junction to ambient when mounted on FR4 PC board (1 oz Cu) with 4 mm^2 copper pads and track width 1 mm, length 25 mm
- Steady-State Power: 0.5 watts at $T_L \leq 50^oC$ 3/8 inch (10 mm) from body or 0.48 W at $T_A \leq 25^oC$ when mounted on FR4 PC board as described for thermal resistance above (also see Figure1)
- Forward voltage @200 mA: 1.5 volts (maximum)
- Solder Temperatures: 260 °C for 10 s (max)

MECHANICAL AND PACKAGING

- CASE: Hermetically sealed axial-lead glass DO-35 (DO-204AH) package
- FINISH: Tin-Lead or RoHS Compliant annealed matte-Tin plating solderable per MIL-STD-750, method 2026
- POLARITY: Cathode indicated by band. Diode to be operated with the banded end positive with respect to the opposite end for Zener regulation
- MARKING: Part number
- TAPE & REEL option: Standard per EIA-296 (add "TR" suffix to part number)
- WEIGHT: 0.2 grams

See package dimensions on last page

ELECTRICAL CHARACTERISTICS @ 25°C

JEDEC Type No. Note 1	Nominal Zener Voltage V_Z @ I_{ZT} Volts	Test Current I_{ZT} mA	Max Zener Impedance A & B Suffix Only Note 2		Max Reverse Current				Max Zener Voltage Temp. Coeff. (A & B Suffix Only) α_{VZ} (% / °C) Note 3
					A, B, C & D Suffix Only			Non-Suffix	
			Z_{ZT} @ I_{ZK} Ohms	Z_{ZK} @ I_{ZK} = 0.25 mA Ohms	I_R µA	@ V_R Volts A	@ V_R Volts B,C & D	I_R @ V_R Used For Suffix A µA	
1N5221	2.4	20	30	1200	100	0.95	1.0	200	-0.085
1N5222	2.5	20	30	1250	100	0.95	1.0	200	-0.085
1N5223	2.7	20	30	1300	75	0.95	1.0	150	-0.080
1N5224	2.8	20	30	1400	75	0.95	1.0	150	-0.080
1N5225	3.0	20	29	1600	50	0.95	1.0	100	-0.075
1N5226	3.3	20	28	1600	25	0.95	1.0	100	-0.070
1N5227	3.6	20	24	1700	15	0.95	1.0	100	-0.065
1N5228	3.9	20	23	1900	10	0.95	1.0	75	-0.060
1N5229	4.3	20	22	2000	5.0	0.95	1.0	50	+/-0.055
1N5230	4.7	20	19	1900	50	1.9	2.0	50	+/-0.030

Copyright © 2005

Microsemi
Scottsdale Division
8700 E. Thomas Rd. PO Box 1390, Scottsdale, AZ 85252 USA, (480) 941-6300, Fax: (480) 947-1503

JEDEC Type No. Note 1	Nominal Zener Voltage V_Z @ I_{ZT} Volts	Test Current I_{ZT} mA	Max Zener Impedance A & B Suffix Only Note 2		Max Reverse Current				Max Zener Voltage Temp. Coeff. (A & B Suffix Only) α_{VZ} (% / °C) Note 3
					A, B, C & D Suffix Only			Non-Suffix	
			Z_{ZT} @ I_{ZK} Ohms	Z_{ZK} @ I_{ZK} = 0.25 mA Ohms	I_R µA	@ V_R Volts A	@ V_R Volts B,C & D	I_R @ V_R Used For Suffix A µA	
1N5231	5.1	20	17	1600	5.0	1.9	2.0	50	+/-0.030
1N5232	5.6	20	11	1600	5.0	2.9	3.0	50	+0.038
1N5233	6.0	20	7.0	1600	5.0	3.3	3.5	50	+0.038
1N5234	6.2	20	7.0	1000	5.0	3.8	4.0	50	+0.045
1N5235	6.8	20	5.0	750	3.0	4.8	5.0	30	+0.050
1N5236	7.5	20	6.0	500	3.0	5.7	6.0	30	+0.058
1N5237	8.2	20	8.0	500	3.0	6.2	6.5	30	+0.062
1N5238	8.7	20	8.0	600	3.0	6.2	6.5	30	+0.065
1N5239	9.1	20	10	600	3.0	6.7	7.0	30	+0.068
1N5240	10	20	17	600	3.0	7.6	8.0	30	+0.075
1N5241	11	20	22	600	2.0	8.0	8.4	30	+0.076
1N5242	12	20	30	600	1.0	8.7	9.1	10	+0.077
1N5243	13	9.5	13	600	0.5	9.4	9.9	10	+0.079
1N5244	14	9.0	15	600	0.1	9.5	10	10	+0.082
1N5245	15	8.5	16	600	0.1	10.5	11	10	+0.082
1N5246	16	7.8	17	600	0.1	11.4	12	10	+0.083
1N5247	17	7.4	19	600	0.1	12.4	13	10	+0.084
1N5248	18	7.0	21	600	0.1	13.3	14	10	+0.085
1N5249	19	6.6	23	600	0.1	13.3	14	10	+0.086
1N5250	20	6.2	25	600	0.1	14.3	15	10	+0.086
1N5251	22	5.6	29	600	0.1	16.2	17	10	+0.087
1N5252	24	5.2	33	600	0.1	17.1	18	10	+0.088
1N5253	25	5.0	35	600	0.1	18.1	19	10	+0.089
1N5254	27	4.6	41	600	0.1	20	21	10	+0.090
1N5255	28	4.5	44	600	0.1	20	21	10	+0.091
1N5256	30	4.2	49	600	0.1	22	23	10	+0.091
1N5257	33	3.8	58	700	0.1	24	25	10	+0.092
1N5258	36	3.4	70	700	0.1	26	27	10	+0.093
1N5259	39	3.2	80	800	0.1	29	30	10	+0.094
1N5260	43	3.0	93	900	0.1	31	33	10	+0.095
1N5261	47	2.7	105	1000	0.1	34	36	10	+0.095
1N5262	51	2.5	125	1100	0.1	37	39	10	+0.096
1N5263	56	2.2	150	1300	0.1	41	43	10	+0.096
1N5264	60	2.1	170	1400	0.1	44	46	10	+0.097
1N5265	62	2.0	185	1400	0.1	45	47	10	+0.097
1N5266	68	1.8	230	1600	0.1	49	52	10	+0.097
1N5267	75	1.7	270	1700	0.1	53	56	10	+0.098
1N5268	82	1.5	330	2000	0.1	59	62	10	+0.098
1N5269	87	1.4	370	2200	0.1	65	68	10	+0.099
1N5270	91	1.4	400	2300	0.1	66	69	10	+0.099
1N5271	100	1.3	500	2600	0.1	72	76	10	+0.110
1N5272	110	1.1	750	3000	0.1	80	84	10	+0.110
1N5273	120	1.0	900	4000	0.1	86	91	10	+0.110
1N5274	130	0.95	1100	4500	0.1	94	99	10	+0.110
1N5275	140	0.90	1300	4500	0.1	101	106	10	+0.110
1N5276	150	0.85	1500	5000	0.1	108	114	10	+0.110
1N5277	160	0.80	1700	5500	0.1	116	122	10	+0.110
1N5278	170	0.74	1900	5500	0.1	123	129	10	+0.110
1N5279	180	0.68	2200	6000	0.1	130	137	10	+0.110
1N5280	190	0.66	2400	6500	0.1	137	144	10	+0.110
1N5281	200	0.65	2500	7000	0.1	144	152	10	+0.110

*JEDEC registered data. JEDEC type numbers listed indicate a tolerance of +/-20% with guaranteed limits on only V_Z, I_R, and V_F. Devices with guaranteed limits on all six parameters are indicated by suffix A for +/-10% tolerance and suffix B for +/-5% tolerance. Also available with suffix C or D which indicates 2% and 1% tolerance respectively.

NOTES:

1. The electrical characteristics are measured after allowing the device to stabilize for 20 seconds when mounted with a 3/8" (10 mm) minimum lead length from the case.
2. The zener impedance is derived from the 60 Hz ac voltage that results when an ac current having an rms value equal to 10% of the dc zener current (I_{ZT} or I_{ZK}) is superimposed on I_{ZT} or I_{ZK}. Zener impedance is measured at two points to ensure a sharp knee on the breakdown curve, thereby eliminating unstable units. Also see MicroNote 202 for variation in dynamic impedance with different operating currents.
3. Temperature coefficient (α_{VZ}). Test conditions for temperature coefficient are as follows:
   a. I_{ZT} = 7.5 mA, T_1 = 25°C, T_2 = 125°C (1N5221A, B thru 1N5242A, B).
   b. I_{ZT} = Rated I_{ZT}, T_1 = 25°C, T_2 = 125°C (1N5243A, B thru 1N5281A, B).

   (Device to be temperature stabilized with current applied prior to reading breakdown voltage at the specified ambient temp.)

Copyright © 2005

GRAPHS

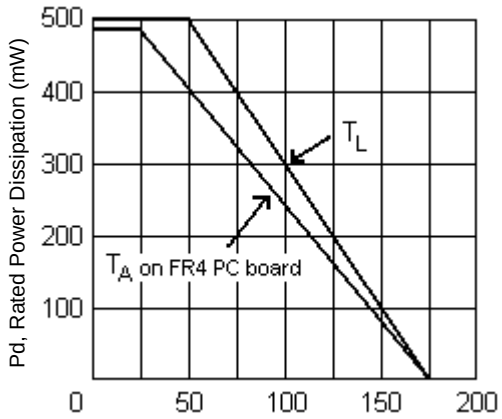

T_L Lead Temperature at 3/8" From Body
or T_A on FR4 PC Board

FIGURE 1
POWER DERATING CURVE

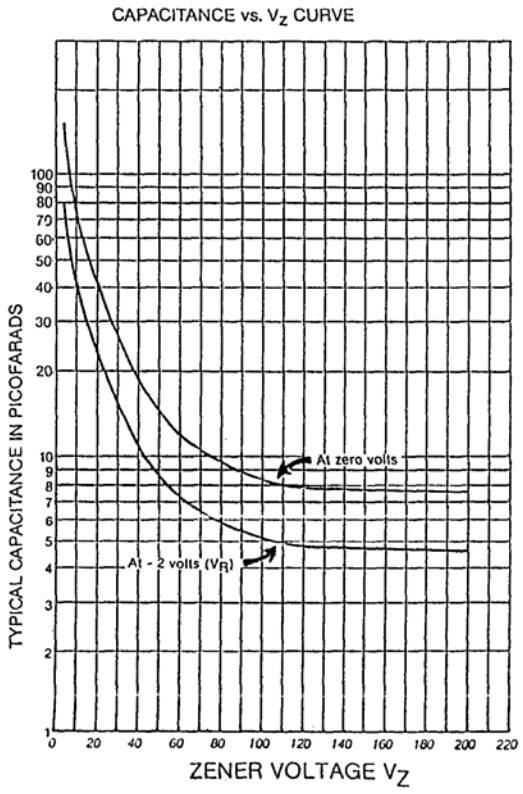

FIGURE 2
CAPACITANCE vs. ZENER VOLTAGE
(TYPICAL)

PACKAGE DIMENSIONS

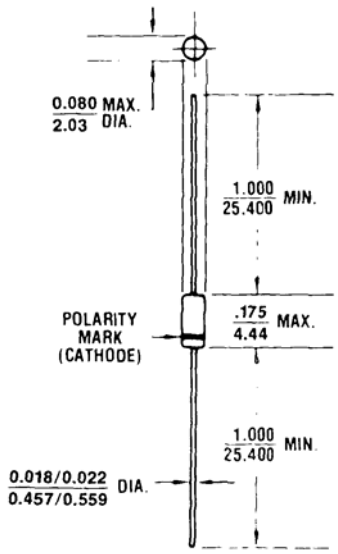

All dimensions in INCH
mm

www.Microsemi.COM

Copyright © 2005
8-09-2005 REV D