Voidless Hermetically Sealed Bidirectional Transient Voltage Suppressors Data Sheet

1N6103A-1N6137A

Product Overview

This series of industry-recognized, voidless, hermetically sealed bidirectional Transient Voltage Suppressors (TVS) is military qualified per MIL-PRF-19500/516 and is ideal for high-reliability applications where a failure cannot be tolerated. They provide a working peak standoff voltage selection from 5.7 V to 152 V with a 500 W rating for a 10/1000 µs pulse. They are very robust in hard-glass construction and use internal "*Category 1*" metallurgical bonds. These devices are available as both a non-suffix part and an "A" version providing different voltage tolerances as described in the nomenclature section. These devices are also available in a surface-mount MELF package configuration.

Features

- High surge current and peak pulse power provides transient voltage protection for sensitive circuits.
- Double-layer passivation
- Internal "*Category 1*" metallurgical bonds
- Voidless, hermetically sealed glass package
- JAN, JANTX, and JANTXV, JANS qualified versions are available per MIL-PRF-19500/516. (See Part Nomenclature for all available options).
- RoHS compliant versions available (commercial grade only).

Applications

- Military and other high-reliability applications
- Extremely robust construction
- Extensive range in working peak "standoff" voltage (V_{WM}) from 5.7 V to 152 V
- 500 W peak pulse power (P_{PP}) for a 10/1000 µs pulse
- ESD and EFT protection per IEC6100-4-2 and IEC61000-4-4 respectively
- Protection from the secondary effects of lightning per select levels in IEC61000-4-5
- Flexible axial-leaded mounting terminals
- Non-sensitive to ESD per MIL-STD-750 method 1020
- Inherently radiation hard as described in MicroNote 050.

Figure 1. "B" Package

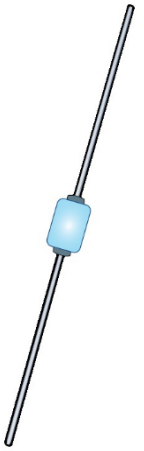

© 2023 Microchip Technology Inc. and its subsidiaries

1. Maximum Ratings

Maximum ratings are taken at T_A = 25 °C unless otherwise noted.

Parameters/Test Conditions	Symbol	Value	Unit
Junction and storage temperature	T_J and T_{STG}	–55 to +175	°C
Thermal resistance junction-to-lead[1]	$R_{\Theta JL}$	33.5	°C/W
Peak pulse power at 25 °C (10/1000 µs)	P_{PP}	500	W
Steady-state power at T_L = 75 °C[1]	P_D	3.0	W
Steady-state power at T_A = 25 °C[2]	P_D	2.0	W
Impulse repetition rate	df	0.01	%
Solder temperature at 10 seconds	T_{SP}	260	°C

Notes:

1. At 3/8 inch lead length from body.
2. Steady-state power ratings with reference to ambient are for PC boards where thermal resistance from mounting point to ambient is sufficiently controlled where maximum rated T_J is not exceeded (also see Figure 3-4).

1.1 Mechanical and Packaging

- Case: Hermetically sealed voidless hard glass with tungsten slugs
- Terminals: Axial-leads are tin/lead over copper. RoHS compliant matte-tin is available on commercial grade only.
- Marking: Body paint and part number
- Polarity: No polarity marking for these bidirectional TVSs
- Tape and reel option: Standard per EIA-296. Consult factory for quantities.
- Weight: Approximately 750 milligrams
- See Package Dimensions.

1.2 Part Nomenclature

Applicable to entire series:

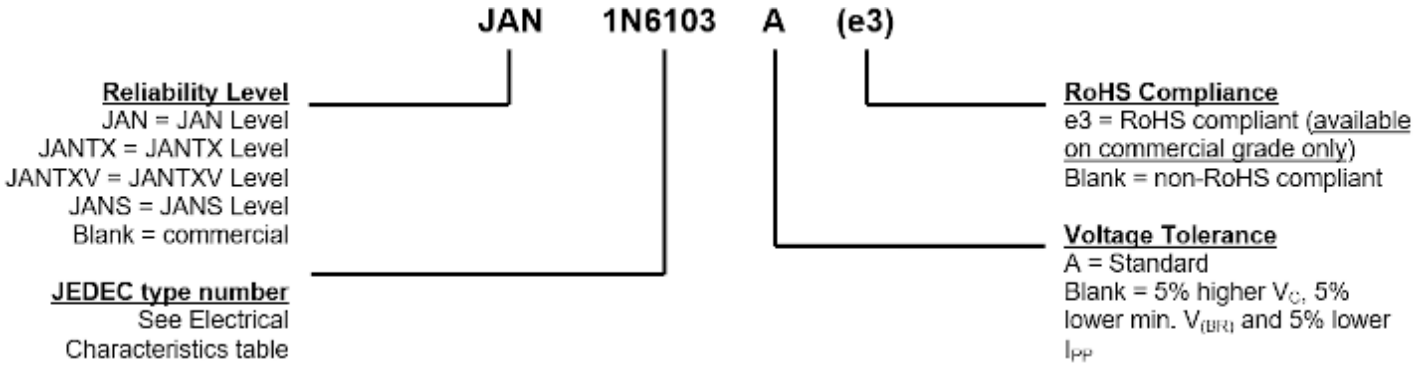

© 2023 Microchip Technology Inc. and its subsidiaries

2. Symbols and Definitions

Symbol	Definition
$\alpha_{V(BR)}$	Temperature coefficient of minimum breakdown voltage: The change in breakdown voltage divided by the change in temperature that caused it expressed in %/°C or mV/°C.
$V_{(BR)}$	Minimum breakdown voltage: The minimum voltage the device will exhibit at a specified current.
V_{WM}	Working peak voltage: The maximum peak voltage that can be applied over the operating temperature range. This is also referred to as standoff voltage.
I_D	Maximum standby current: The maximum current that will flow at the specified voltage and temperature.
V_C	Maximum clamping voltage at specified I_{PP} (Peak Pulse Current) at the specified pulse conditions.
P_{PP}	Peak pulse power: The peak power dissipation resulting from the peak impulse current I_{PP}.

2.1 Electrical Characteristics

Industry Type Number[1]	Minimum Breakdown Voltage[1] $V_{(BR)}$ at $I_{(BR)}$		Rated Standoff Voltage V_{WM}	Maximum Standby Current I_D at V_{WM}	Maximum Clamping Voltage[1] V_C at I_{PP}	Maximum Peak Pulse Current[1] I_{PP}	Maximum Temp. Coef. of $V_{(BR)}$ $\alpha_{V(BR)}$
	V	mA	V	µA	V	A	%/°C
1N6103A[2]	7.13	175	5.7	50	11.2	44.6	0.06
1N6104A[2]	7.79	150	6.2	20	12.1	41.3	0.06
1N6105A[2]	8.65	150	6.9	20	13.4	37.3	0.06
1N6106A[2]	9.50	125	7.6	20	14.5	34.5	0.07
1N6107A[2]	10.45	125	8.4	20	15.6	32.0	0.07
1N6108A[2]	11.40	100	9.1	20	16.9	29.6	0.07
1N6109A[2]	12.35	100	9.9	20	18.2	27.5	0.08
1N6110A[2]	14.25	75	11.4	20	21.0	23.8	0.08
1N6111A[2]	15.20	75	12.2	20	22.3	22.4	0.08
1N6112A[2]	17.10	65	13.7	1	25.1	19.9	0.085
1N6113A[2]	19.0	65	15.2	1	27.7	18.0	0.085
1N6114A[2]	20.9	50	16.7	1	30.5	16.4	0.085
1N6115A[2]	22.8	50	18.2	1	33.3	15.0	0.09
1N6116A[2]	25.7	50	20.6	1	37.4	13.4	0.09
1N6117A[2]	28.5	40	22.8	1	41.6	12.0	0.09
1N6118A[2]	31.4	40	25.1	1	45.7	10.9	0.095
1N6119A	34.2	30	27.4	1	49.9	10.0	0.095
1N6120A	37.1	30	29.7	1	53.6	9.3	0.095
1N6121A	40.9	30	32.7	1	59.1	8.5	0.095
1N6122A	44.7	25	35.8	1	64.6	7.7	0.095
1N6123A	48.5	25	38.8	1	70.1	7.1	0.095
1N6124A	53.2	20	42.6	1	77.0	6.5	0.095
1N6125A	58.9	20	47.1	1	85.3	5.9	0.100

© 2023 Microchip Technology Inc. and its subsidiaries

.....continued

Industry Type Number[1]	Minimum Breakdown Voltage[1] $V_{(BR)}$ at $I_{(BR)}$		Rated Standoff Voltage V_{WM}	Maximum Standby Current I_D at V_{WM}	Maximum Clamping Voltage[1] V_C at I_{PP}	Maximum Peak Pulse Current[1] I_{PP}	Maximum Temp. Coef. of $V_{(BR)}$ $\alpha_{V(BR)}$
	V	mA	V	µA	V	A	%/°C
1N6126A	64.6	20	51.7	1	97.1	5.1	0.100
1N6127A	71.3	20	56.0	1	103.1	4.8	0.100
1N6128A	77.9	15	62.2	1	112.8	4.4	0.100
1N6129A	86.5	15	69.2	1	125.1	4.0	0.100
1N6130A	95.0	12	76.0	1	137.6	3.6	0.100
1N6131A	104.5	12	86.6	1	151.3	3.3	0.100
1N6132A	114.0	10	91.2	1	165.1	3.0	0.100
1N6133A	123.5	10	98.8	1	178.8	2.8	0.105
1N6134A	142.5	8	114.0	1	206.3	2.4	0.105
1N6135A	152.0	8	121.6	1	218.4	2.3	0.105
1N6136A	171.0	5	136.8	1	245.7	2.0	0.110
1N6137A	190.0	5	152.0	1	273.0	1.8	0.110

Notes:

1. Part number without the “A” suffix has 5% higher V_C, 5% lower minimum $V_{(BR)}$, and 5% lower I_{PP}.
2. Also available in JANS qualification per MIL-PRF-19500/516.

© 2023 Microchip Technology Inc. and its subsidiaries

3. Performance Curves

Figure 3-1. Peak Pulse Power vs. Pulse Time

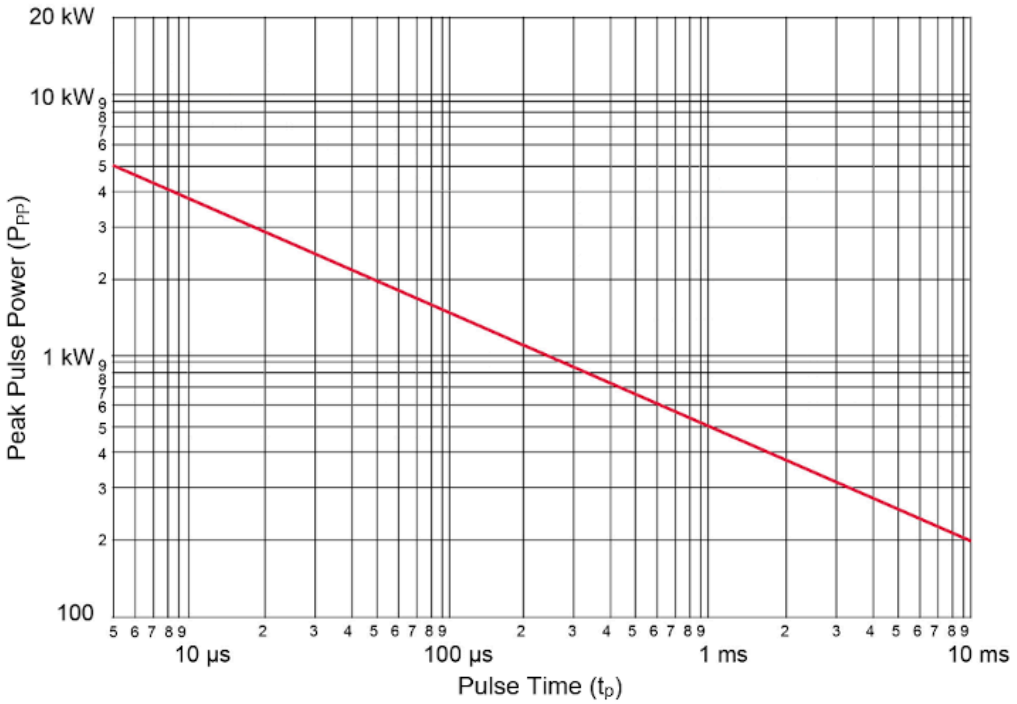

Figure 3-2. Pulse Derating curve (Not Applicable to JANHC/JANKC Die)

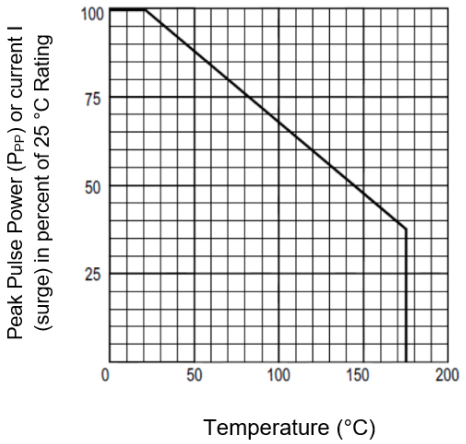

© 2023 Microchip Technology Inc. and its subsidiaries

Figure 3-3. Pulse Wave Form

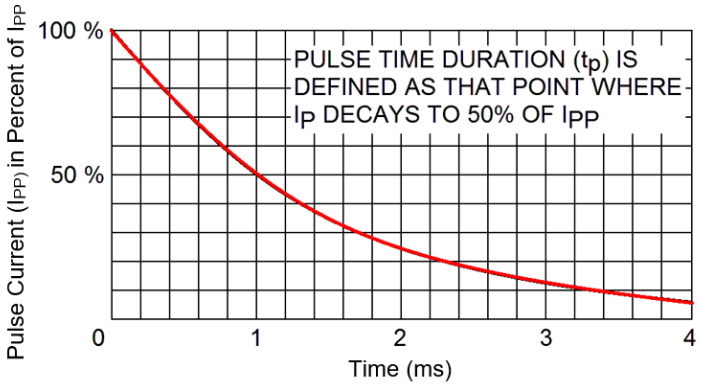

Figure 3-4. Temperature-Power Derating Curve

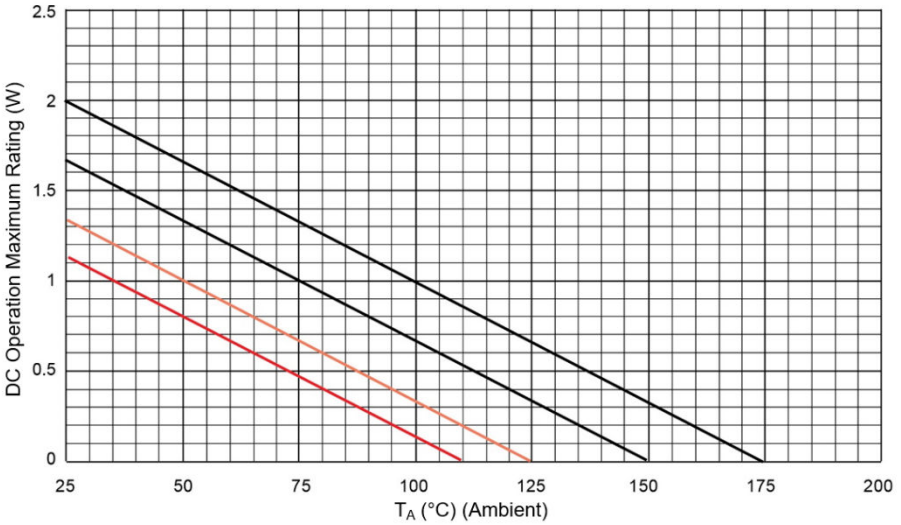

© 2023 Microchip Technology Inc. and its subsidiaries

4. Package Dimensions

Dimensions are in inches. Millimeters are given for general information only. In accordance with ASME Y14.5M, diameters are equivalent to Φx symbology.

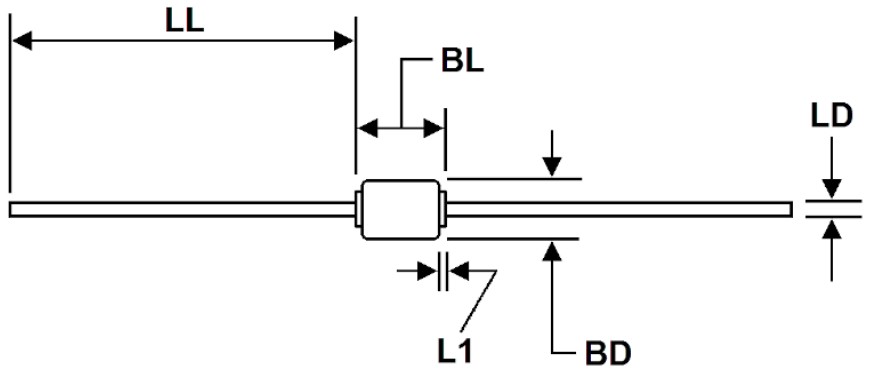

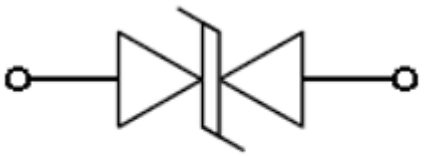

Schematic Symbol

Ltr	Inches		Millimeters		Notes
	Min	Max	Min	Max	
BD	0.085	0.140	2.16	3.56	1
BL	0.140	0.185	3.56	4.70	
LD	0.026	0.033	0.66	0.84	
LL	1.00	1.30	25.40	33.02	
L1	-	0.030	-	0.76	2

Notes:

1. Dimension BD shall be measured at the largest diameter.
2. Dimension L1 lead diameter uncontrolled in this area.

© 2023 Microchip Technology Inc. and its subsidiaries

5. Revision History

The revision history describes the changes that were implemented in the document. The changes are listed by revision, starting with the most current publication.

Revision	Date	Description
A	06/2023	Converted document to Microchip template.

© 2023 Microchip Technology Inc. and its subsidiaries

Microchip Information

The Microchip Website

Microchip provides online support via our website at www.microchip.com/. This website is used to make files and information easily available to customers. Some of the content available includes:

- **Product Support** – Data sheets and errata, application notes and sample programs, design resources, user's guides and hardware support documents, latest software releases and archived software
- **General Technical Support** – Frequently Asked Questions (FAQs), technical support requests, online discussion groups, Microchip design partner program member listing
- **Business of Microchip** – Product selector and ordering guides, latest Microchip press releases, listing of seminars and events, listings of Microchip sales offices, distributors and factory representatives

Product Change Notification Service

Microchip's product change notification service helps keep customers current on Microchip products. Subscribers will receive email notification whenever there are changes, updates, revisions or errata related to a specified product family or development tool of interest.

To register, go to www.microchip.com/pcn and follow the registration instructions.

Customer Support

Users of Microchip products can receive assistance through several channels:

- Distributor or Representative
- Local Sales Office
- Embedded Solutions Engineer (ESE)
- Technical Support

Customers should contact their distributor, representative or ESE for support. Local sales offices are also available to help customers. A listing of sales offices and locations is included in this document.

Technical support is available through the website at: www.microchip.com/support

Microchip Devices Code Protection Feature

Note the following details of the code protection feature on Microchip products:

- Microchip products meet the specifications contained in their particular Microchip Data Sheet.
- Microchip believes that its family of products is secure when used in the intended manner, within operating specifications, and under normal conditions.
- Microchip values and aggressively protects its intellectual property rights. Attempts to breach the code protection features of Microchip product is strictly prohibited and may violate the Digital Millennium Copyright Act.
- Neither Microchip nor any other semiconductor manufacturer can guarantee the security of its code. Code protection does not mean that we are guaranteeing the product is "unbreakable". Code protection is constantly evolving. Microchip is committed to continuously improving the code protection features of our products.

Legal Notice

This publication and the information herein may be used only with Microchip products, including to design, test, and integrate Microchip products with your application. Use of this information in any other manner violates these terms. Information regarding device applications is provided only for your convenience and may be superseded by updates. It is your responsibility to ensure

© 2023 Microchip Technology Inc. and its subsidiaries

that your application meets with your specifications. Contact your local Microchip sales office for additional support or, obtain additional support at www.microchip.com/en-us/support/design-help/client-support-services.

THIS INFORMATION IS PROVIDED BY MICROCHIP "AS IS". MICROCHIP MAKES NO REPRESENTATIONS OR WARRANTIES OF ANY KIND WHETHER EXPRESS OR IMPLIED, WRITTEN OR ORAL, STATUTORY OR OTHERWISE, RELATED TO THE INFORMATION INCLUDING BUT NOT LIMITED TO ANY IMPLIED WARRANTIES OF NON-INFRINGEMENT, MERCHANTABILITY, AND FITNESS FOR A PARTICULAR PURPOSE, OR WARRANTIES RELATED TO ITS CONDITION, QUALITY, OR PERFORMANCE.

IN NO EVENT WILL MICROCHIP BE LIABLE FOR ANY INDIRECT, SPECIAL, PUNITIVE, INCIDENTAL, OR CONSEQUENTIAL LOSS, DAMAGE, COST, OR EXPENSE OF ANY KIND WHATSOEVER RELATED TO THE INFORMATION OR ITS USE, HOWEVER CAUSED, EVEN IF MICROCHIP HAS BEEN ADVISED OF THE POSSIBILITY OR THE DAMAGES ARE FORESEEABLE. TO THE FULLEST EXTENT ALLOWED BY LAW, MICROCHIP'S TOTAL LIABILITY ON ALL CLAIMS IN ANY WAY RELATED TO THE INFORMATION OR ITS USE WILL NOT EXCEED THE AMOUNT OF FEES, IF ANY, THAT YOU HAVE PAID DIRECTLY TO MICROCHIP FOR THE INFORMATION.

Use of Microchip devices in life support and/or safety applications is entirely at the buyer's risk, and the buyer agrees to defend, indemnify and hold harmless Microchip from any and all damages, claims, suits, or expenses resulting from such use. No licenses are conveyed, implicitly or otherwise, under any Microchip intellectual property rights unless otherwise stated.

Trademarks

The Microchip name and logo, the Microchip logo, Adaptec, AVR, AVR logo, AVR Freaks, BesTime, BitCloud, CryptoMemory, CryptoRF, dsPIC, flexPWR, HELDO, IGLOO, JukeBlox, KeeLoq, Kleer, LANCheck, LinkMD, maXStylus, maXTouch, MediaLB, megaAVR, Microsemi, Microsemi logo, MOST, MOST logo, MPLAB, OptoLyzer, PIC, picoPower, PICSTART, PIC32 logo, PolarFire, Prochip Designer, QTouch, SAM-BA, SenGenuity, SpyNIC, SST, SST Logo, SuperFlash, Symmetricom, SyncServer, Tachyon, TimeSource, tinyAVR, UNI/O, Vectron, and XMEGA are registered trademarks of Microchip Technology Incorporated in the U.S.A. and other countries.

AgileSwitch, APT, ClockWorks, The Embedded Control Solutions Company, EtherSynch, Flashtec, Hyper Speed Control, HyperLight Load, Libero, motorBench, mTouch, Powermite 3, Precision Edge, ProASIC, ProASIC Plus, ProASIC Plus logo, Quiet- Wire, SmartFusion, SyncWorld, Temux, TimeCesium, TimeHub, TimePictra, TimeProvider, TrueTime, and ZL are registered trademarks of Microchip Technology Incorporated in the U.S.A.

Adjacent Key Suppression, AKS, Analog-for-the-Digital Age, Any Capacitor, AnyIn, AnyOut, Augmented Switching, BlueSky, BodyCom, Clockstudio, CodeGuard, CryptoAuthentication, CryptoAutomotive, CryptoCompanion, CryptoController, dsPICDEM, dsPICDEM.net, Dynamic Average Matching, DAM, ECAN, Espresso T1S, EtherGREEN, GridTime, IdealBridge, In-Circuit Serial Programming, ICSP, INICnet, Intelligent Paralleling, IntelliMOS, Inter-Chip Connectivity, JitterBlocker, Knob-on-Display, KoD, maxCrypto, maxView, memBrain, Mindi, MiWi, MPASM, MPF, MPLAB Certified logo, MPLIB, MPLINK, MultiTRAK, NetDetach, Omniscient Code Generation, PICDEM, PICDEM.net, PICkit, PICtail, PowerSmart, PureSilicon, QMatrix, REAL ICE, Ripple Blocker, RTAX, RTG4, SAM-ICE, Serial Quad I/O, simpleMAP, SimpliPHY, SmartBuffer, SmartHLS, SMART-I.S., storClad, SQI, SuperSwitcher, SuperSwitcher II, Switchtec, SynchroPHY, Total Endurance, Trusted Time, TSHARC, USBCheck, VariSense, VectorBlox, VeriPHY, ViewSpan, WiperLock, XpressConnect, and ZENA are trademarks of Microchip Technology Incorporated in the U.S.A. and other countries.

SQTP is a service mark of Microchip Technology Incorporated in the U.S.A.

The Adaptec logo, Frequency on Demand, Silicon Storage Technology, and Symmcom are registered trademarks of Microchip Technology Inc. in other countries.

GestIC is a registered trademark of Microchip Technology Germany II GmbH & Co. KG, a subsidiary of Microchip Technology Inc., in other countries.

All other trademarks mentioned herein are property of their respective companies.

© 2023 Microchip Technology Inc. and its subsidiaries

© 2023, Microchip Technology Incorporated and its subsidiaries. All Rights Reserved.

ISBN: 978-1-6683-2581-0

Quality Management System

For information regarding Microchip's Quality Management Systems, please visit www.microchip.com/quality.

© 2023 Microchip Technology Inc. and its subsidiaries

Worldwide Sales and Service

AMERICAS	ASIA/PACIFIC	ASIA/PACIFIC	EUROPE
Corporate Office	**Australia - Sydney**	**India - Bangalore**	**Austria - Wels**
2355 West Chandler Blvd.	Tel: 61-2-9868-6733	Tel: 91-80-3090-4444	Tel: 43-7242-2244-39
Chandler, AZ 85224-6199	**China - Beijing**	**India - New Delhi**	Fax: 43-7242-2244-393
Tel: 480-792-7200	Tel: 86-10-8569-7000	Tel: 91-11-4160-8631	**Denmark - Copenhagen**
Fax: 480-792-7277	**China - Chengdu**	**India - Pune**	Tel: 45-4485-5910
Technical Support:	Tel: 86-28-8665-5511	Tel: 91-20-4121-0141	Fax: 45-4485-2829
www.microchip.com/support	**China - Chongqing**	**Japan - Osaka**	**Finland - Espoo**
Web Address:	Tel: 86-23-8980-9588	Tel: 81-6-6152-7160	Tel: 358-9-4520-820
www.microchip.com	**China - Dongguan**	**Japan - Tokyo**	**France - Paris**
Atlanta	Tel: 86-769-8702-9880	Tel: 81-3-6880- 3770	Tel: 33-1-69-53-63-20
Duluth, GA	**China - Guangzhou**	**Korea - Daegu**	Fax: 33-1-69-30-90-79
Tel: 678-957-9614	Tel: 86-20-8755-8029	Tel: 82-53-744-4301	**Germany - Garching**
Fax: 678-957-1455	**China - Hangzhou**	**Korea - Seoul**	Tel: 49-8931-9700
Austin, TX	Tel: 86-571-8792-8115	Tel: 82-2-554-7200	**Germany - Haan**
Tel: 512-257-3370	**China - Hong Kong SAR**	**Malaysia - Kuala Lumpur**	Tel: 49-2129-3766400
Boston	Tel: 852-2943-5100	Tel: 60-3-7651-7906	**Germany - Heilbronn**
Westborough, MA	**China - Nanjing**	**Malaysia - Penang**	Tel: 49-7131-72400
Tel: 774-760-0087	Tel: 86-25-8473-2460	Tel: 60-4-227-8870	**Germany - Karlsruhe**
Fax: 774-760-0088	**China - Qingdao**	**Philippines - Manila**	Tel: 49-721-625370
Chicago	Tel: 86-532-8502-7355	Tel: 63-2-634-9065	**Germany - Munich**
Itasca, IL	**China - Shanghai**	**Singapore**	Tel: 49-89-627-144-0
Tel: 630-285-0071	Tel: 86-21-3326-8000	Tel: 65-6334-8870	Fax: 49-89-627-144-44
Fax: 630-285-0075	**China - Shenyang**	**Taiwan - Hsin Chu**	**Germany - Rosenheim**
Dallas	Tel: 86-24-2334-2829	Tel: 886-3-577-8366	Tel: 49-8031-354-560
Addison, TX	**China - Shenzhen**	**Taiwan - Kaohsiung**	**Israel - Ra'anana**
Tel: 972-818-7423	Tel: 86-755-8864-2200	Tel: 886-7-213-7830	Tel: 972-9-744-7705
Fax: 972-818-2924	**China - Suzhou**	**Taiwan - Taipei**	**Italy - Milan**
Detroit	Tel: 86-186-6233-1526	Tel: 886-2-2508-8600	Tel: 39-0331-742611
Novi, MI	**China - Wuhan**	**Thailand - Bangkok**	Fax: 39-0331-466781
Tel: 248-848-4000	Tel: 86-27-5980-5300	Tel: 66-2-694-1351	**Italy - Padova**
Houston, TX	**China - Xian**	**Vietnam - Ho Chi Minh**	Tel: 39-049-7625286
Tel: 281-894-5983	Tel: 86-29-8833-7252	Tel: 84-28-5448-2100	**Netherlands - Drunen**
Indianapolis	**China - Xiamen**		Tel: 31-416-690399
Noblesville, IN	Tel: 86-592-2388138		Fax: 31-416-690340
Tel: 317-773-8323	**China - Zhuhai**		**Norway - Trondheim**
Fax: 317-773-5453	Tel: 86-756-3210040		Tel: 47-72884388
Tel: 317-536-2380			**Poland - Warsaw**
Los Angeles			Tel: 48-22-3325737
Mission Viejo, CA			**Romania - Bucharest**
Tel: 949-462-9523			Tel: 40-21-407-87-50
Fax: 949-462-9608			**Spain - Madrid**
Tel: 951-273-7800			Tel: 34-91-708-08-90
Raleigh, NC			Fax: 34-91-708-08-91
Tel: 919-844-7510			**Sweden - Gothenberg**
New York, NY			Tel: 46-31-704-60-40
Tel: 631-435-6000			**Sweden - Stockholm**
San Jose, CA			Tel: 46-8-5090-4654
Tel: 408-735-9110			**UK - Wokingham**
Tel: 408-436-4270			Tel: 44-118-921-5800
Canada - Toronto			Fax: 44-118-921-5820
Tel: 905-695-1980			
Fax: 905-695-2078			

© 2023 Microchip Technology Inc. and its subsidiaries