TECHNICAL DATA SHEET

6 Lake Street, Lawrence, MA 01841
1-800-446-1158 / (978) 620-2600 / Fax: (978) 689-0803
Website: http: //www.microsemi.com

Gort Road Business Park, Ennis, Co. Clare, Ireland
Tel: +353 (0) 65 6840044 Fax: +353 (0) 65 6822298

PNP SILICON SWITCHING TRANSISTOR

Qualified per MIL-PRF-19500/357

DEVICES

2N3634	**2N3635**	**2N3636**	**2N3637**
2N3634L	**2N3635L**	**2N3636L**	**2N3637L**
2N3634UB	**2N3635UB**	**2N3636UB**	**2N3637UB**

LEVELS

JAN
JANTX
JANTXV
JANS

ABSOLUTE MAXIMUM RATINGS *(T_C = +25°C unless otherwise noted)*

Parameters / Test Conditions	Symbol	2N3634* 2N3635*	2N3636* 2N3637*	Unit
Collector-Emitter Voltage	V_{CEO}	140	175	Vdc
Collector-Base Voltage	V_{CBO}	140	175	Vdc
Emitter-Base Voltage	V_{EBO}	5.0	5.0	Vdc
Collector Current	I_C	1.0	1.0	Adc
Total Power Dissipation @ T_A = +25°C @ T_C = +25°C UB: @ T_C = +25°C	P_T **	1.0 5.0 1.5		W W W
Operating & Storage Junction Temperature Range	T_J, T_{stg}	-65 to +200		°C

* Electrical characteristics for "L" suffix devices are identical to the "non L" corresponding devices.

** Consult 19500/357 for De-Rating curves.

ELECTRICAL CHARACTERISTICS *(T_A = +25°C, unless otherwise noted)*

Parameters / Test Conditions	Symbol	Min.	Max.	Unit
OFF CHARACTERTICS				
Collector-Emitter Breakdown Voltage I_C = 10mAdc 2N3634, 2N3635 2N3636, 2N3637	$V_{(BR)CEO}$	 140 175		Vdc
Collector-Base Cutoff Current V_{CB} = 100Vdc V_{CB} = 140Vdc 2N3634, 2N3635 V_{CB} = 175Vdc 2N3636, 2N3637	I_{CBO}		 100 10 10	 ηAdc μAdc μAdc
Emitter-Base Cutoff Current V_{EB} = 3.0Vdc V_{EB} = 5.0Vdc	I_{EBO}		 50 10	 ηAdc μAdc
Collector-Emitter cutoff Current V_{CE} = 100Vdc	I_{CEO}		10	μAdc

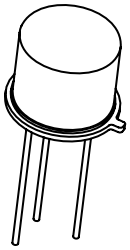

TO-5*
2N3634L, 2N3635L
2N3636L, 2N3637L

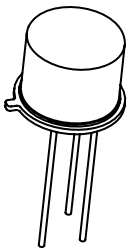

TO-39* (TO-205AD)
2N3634, 2N3635
2N3636, 2N3637

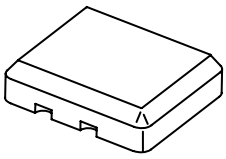

3 PIN
2N3634UB, 2N3635UB
2N3636UB, 2N3637UB

6 Lake Street, Lawrence, MA 01841
1-800-446-1158 / (978) 620-2600 / Fax: (978) 689-0803
Website: http: //www.microsemi.com

Gort Road Business Park, Ennis, Co. Clare, Ireland
Tel: +353 (0) 65 6840044 Fax: +353 (0) 65 6822298

ELECTRICAL CHARACTERISTICS *(T_A = +25°C, unless otherwise noted)*

Parameters / Test Conditions		Symbol	Min.	Max.	Unit
ON CHARACTERISTICS (1)					
Forward-Current Transfer Ratio					
I_C = 0.1mAdc, V_{CE} = 10Vdc	2N3634, 2N3636	h_{FE}	25		
I_C = 1.0mAdc, V_{CE} = 10Vdc			45		
I_C = 10mAdc, V_{CE} = 10Vdc			50		
I_C = 50mAdc, V_{CE} = 10Vdc			50	150	
I_C = 150mAdc, V_{CE} = 10Vdc			30		
I_C = 0.1mAdc, V_{CE} = 10Vdc	2N3635, 2N3637		55		
I_C = 1.0mAdc, V_{CE} = 10Vdc			90		
I_C = 10mAdc, V_{CE} = 10Vdc			100		
I_C = 50mAdc, V_{CE} = 10Vdc			100	300	
I_C = 150mAdc, V_{CE} = 10Vdc			60		
Collector-Emitter Saturation Voltage					
I_C = 10mAdc, I_B = 1.0mAdc		$V_{CE(sat)}$		0.3	Vdc
I_C = 50mAdc, I_B = 5.0mAdc				0.6	
Base-Emitter Saturation Voltage					
I_C = 10mAdc, I_B = 1.0mAdc		$V_{BE(sat)}$		0.8	Vdc
I_C = 50mAdc, I_B = 5.0mAdc			0.65	0.9	

DYNAMIC CHARACTERISTICS

Parameters / Test Conditions		Symbol	Min.	Max.	Unit
Forward Current Transfer Ratio					
I_C = 30mAdc, V_{CE} = 30Vdc, f = 100MHz	2N3634, 2N3636	$\|h_{fe}\|$	1.5	8.0	
	2N3635, 2N3637		2.0	8.5	
Forward Current Transfer Ratio					
I_C = 10mAdc, V_{CE} = 10Vdc, f = 1.0kHz	2N3634, 2N3636	h_{fe}	40	160	
	2N3635, 2N3637		80	320	
Small-Signal Short-Circuit Input Impedance					
I_C = 10mAdc, V_{CE} = 10Vdc, f = 1.0kHz	2N3634, 2N3636	h_{ie}	100	600	Ω
	2N3635, 2N3637		200	1200	
Small-Signal Open-Circuit Input Impedance					
I_C = 10mAdc, V_{CE} = 10Vdc, f = 1.0kHz		h_{oe}		200	µs
Output Capacitance					
V_{CB} = 20Vdc, I_E = 0, 100 kHz ≤ f ≤ 1.0MHz		C_{obo}		10	pF
Input Capacitance					
V_{EB} = 1.0Vdc, I_C = 0, 100 kHz ≤ f ≤ 1.0MHz		C_{ibo}		75	pF
Noise Figure					
V_{CE} = 10Vdc, I_C = 0.5mAdc, R_g = 1.0kΩ	f = 100Hz	NF		5.0	dB
	f = 1.0kHz			3.0	
	f = 10kHz			3.0	

(1) Pulse Test: Pulse Width = 300µs, Duty Cycle ≤ 2.0%

6 Lake Street, Lawrence, MA 01841
1-800-446-1158 / (978) 620-2600 / Fax: (978) 689-0803
Website: http: //www.microsemi.com

Gort Road Business Park, Ennis, Co. Clare, Ireland
Tel: +353 (0) 65 6840044 Fax: +353 (0) 65 6822298

SAFE OPERATING AREA

DC Tests
T_C = 25°C, 1 Cycle, t = 1.0s
Test 1

V_{CE} = 100Vdc, I_C = 30mAdc	2N3634, 2N3635
V_{CE} = 130Vdc, I_C = 20mAdc	2N3636, 2N3637

Test 2
V_{CE} = 50Vdc, I_C = 95mAdc

Test 3
V_{CE} = 5.0Vdc, I_C = 1.0Adc

6 Lake Street, Lawrence, MA 01841
1-800-446-1158 / (978) 620-2600 / Fax: (978) 689-0803
Website: http: //www.microsemi.com

Gort Road Business Park, Ennis, Co. Clare, Ireland
Tel: +353 (0) 65 6840044 Fax: +353 (0) 65 6822298

PACKAGE DIMENSIONS

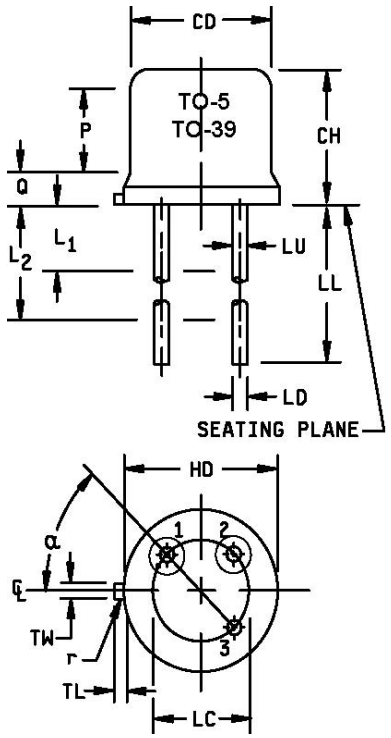

Ltr	Dimensions				Notes
	Inches		Millimeters		
	Min	Max	Min	Max	
CD	.305	.335	7.75	8.51	
CH	.240	.260	6.10	6.60	
HD	.335	.370	8.51	9.40	
LC	.200 TYP		5.08 TYP		7
LD	.016	.021	0.41	0.53	6
LL	See notes 7, 9, and 10				
LU	.016	.019	0.41	0.48	7
L_1		050		1.27	7
L_2	.250		6.35		7
P	.100		2.54		5
Q		.050		1.27	
r		.010		0.254	8
TL	.029	.045	0.74	1.14	4
TW	.028	.034	0.71	0.86	3
α	45° TP		45° TP		6
Term 1	Emitter				
Term 2	Base				
Term 3	Collector				

NOTES:

1. Dimensions are in inches.
2. Millimeters are given for general information only.
3. Beyond r maximum, TW must be held to a minimum length of .021 inch (0.53 mm).
4. TL measured from maximum HD.
5. CD shall not vary more than ±.010 inch (0.25 mm) in zone P. This zone is controlled for automatic handling.
6. Leads at gauge plane .054 - .055 inch (1.37 - 1.40 mm) below seating plane shall be within .007 inch (0.18 mm) radius of true position (TP) at a maximum material condition (MMC) relative to the tab at MMC. The device may be measured by direct methods or by gauge and gauging procedure.
7. LU applies between L1 and L2. LD applies between L2 and L minimum. Diameter is uncontrolled in L1 and beyond LL minimum.
8. r (radius) applies to both inside corners of tab.
9. For transistor types 2N3634 through 2N3637, LL is .500 inch (12.70 mm) minimum, and .750 inch (19.05 mm) maximum (TO-39).
10. For transistor types 2N3634L through 2N3637L, LL is 1.500 inches (38.10 mm) minimum, and 1.750 inches (44.45 mm) maximum (TO-5).
11. In accordance with ASME Y14.5M, diameters are equivalent to φx symbology.

FIGURE 1: Physical dimensions (TO-5 and TO-39)

6 Lake Street, Lawrence, MA 01841
1-800-446-1158 / (978) 620-2600 / Fax: (978) 689-0803
Website: http: //www.microsemi.com

Gort Road Business Park, Ennis, Co. Clare, Ireland
Tel: +353 (0) 65 6840044 Fax: +353 (0) 65 6822298

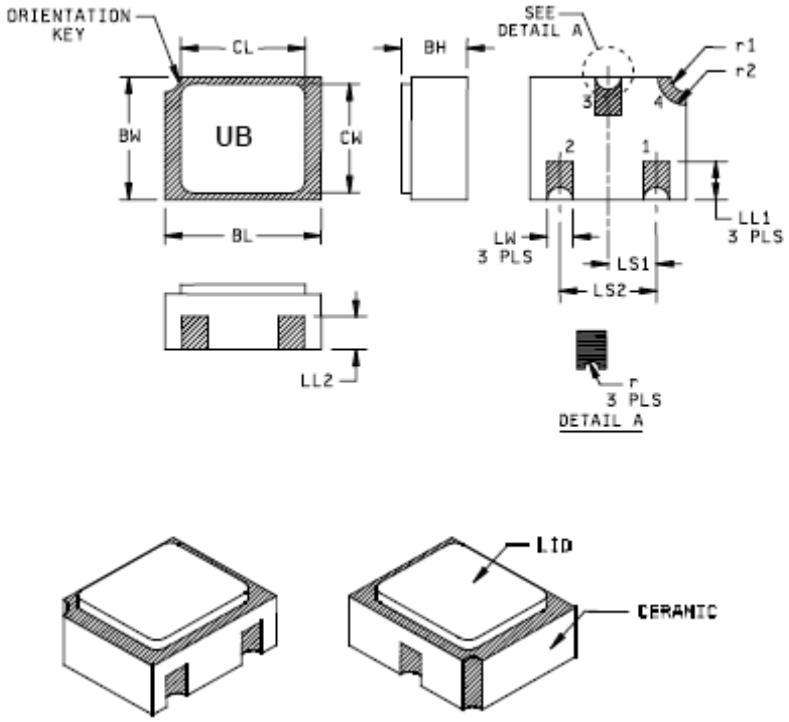

NOTES:

1. Dimensions are in inches.
2. Millimeters are given for general information only.
3. Hatched areas on package denote metallized areas.
4. Pad 1 = Base, Pad 2 = Emitter, Pad 3 = Collector, Pad 4 = Shielding connected to the lid.
5. In accordance with ASME Y14.5M, diameters are. equivalent to φx symbology

Ltr	Dimensions				Notes
	Inches		Millimeters		
	Min	Max	Min	Max	
BH	.046	.056	1.17	1.42	
BL	.115	.128	2.92	3.25	
BW	.085	.108	2.16	2.74	
CL		.128		3.25	
CW		.108		2.74	
LL_1	.022	.038	0.56	0.96	
LL_2	.017	.035	0.43	0.89	
LS_1	.036	.040	0.91	1.02	
LS_2	.071	.079	1.81	2.01	
LW	.016	.024	0.41	0.61	
r		.008		.203	
r_1		.012		.305	
r_2		.022		.559	

FIGURE 2: Physical dimensions, surface mount 2N3634UB through 2N3637UB (UB version).