REVISIONS			
LTR	DESCRIPTION	DATE (YR-MO-DA)	APPROVED
A	Add case outline Y. - ro	17-05-01	C. SAFFLE
B	Editorial changes throughout. - ro	17-07-14	C. SAFFLE

REV																				
SHEET																				
REV	B	B	B																	
SHEET	15	16	17																	

REV STATUS	REV	B	B	B	B	B	B	B	B	B	B	B	B	B	B
OF SHEETS	SHEET	1	2	3	4	5	6	7	8	9	10	11	12	13	14

PMIC N/A

PREPARED BY
RICK OFFICER

DLA LAND AND MARITIME
COLUMBUS, OHIO 43218-3990
http://www.landandmaritime.dla.mil

STANDARD MICROCIRCUIT DRAWING

THIS DRAWING IS AVAILABLE FOR USE BY ALL DEPARTMENTS AND AGENCIES OF THE DEPARTMENT OF DEFENSE

AMSC N/A

CHECKED BY
RAJESH PITHADIA

APPROVED BY
CHARLES F. SAFFLE

DRAWING APPROVAL DATE
16-01-25

REVISION LEVEL
B

MICROCIRCUIT, LINEAR, 8 CHANNEL SOURCE DRIVER, MONOLITHIC SILICON

SIZE	CAGE CODE	
A	**67268**	**5962-15231**

SHEET 1 OF 17

DSCC FORM 2233
APR 97

5962-E377-17

DISTRIBUTION STATEMENT A. Approved for public release. *Distribution is unlimited.*

1. SCOPE

1.1 Scope. This drawing documents two product assurance class levels consisting of high reliability (device class Q) and space application (device class V). A choice of case outlines and lead finishes are available and are reflected in the Part or Identifying Number (PIN). When available, a choice of Radiation Hardness Assurance (RHA) levels is reflected in the PIN.

1.2 PIN. The PIN is as shown in the following example:

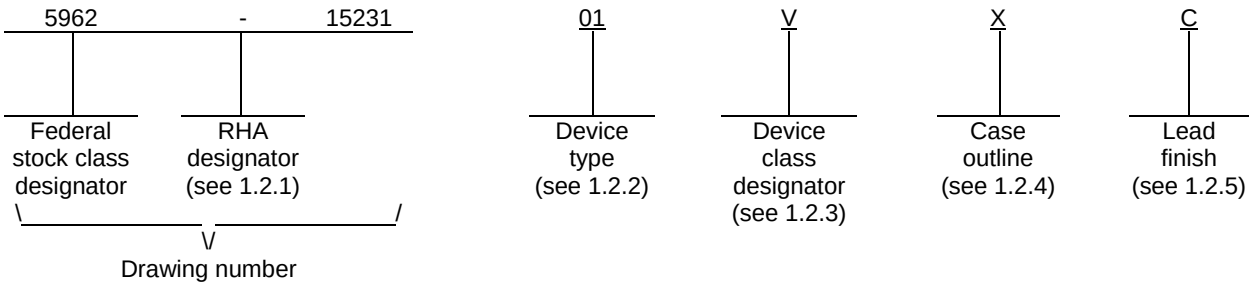

1.2.1 RHA designator. Device classes Q and V RHA marked devices meet the MIL-PRF-38535 specified RHA levels and are marked with the appropriate RHA designator. A dash (-) indicates a non-RHA device.

1.2.2 Device type(s). The device type(s) identify the circuit function as follows:

Device type	Generic number	Circuit function
01	AAHS298B-S-S20B	8 channel source driver

1.2.3 Device class designator. The device class designator is a single letter identifying the product assurance level as follows:

Device class	Device requirements documentation
Q or V	Certification and qualification to MIL-PRF-38535

1.2.4 Case outline(s). The case outline(s) are as designated in MIL-STD-1835 and as follows:

Outline letter	Descriptive designator	Terminals	Package style
X	See figure 1	20	Flat pack with gull wing leads
Y	See figure 1	20	Flat pack

1.2.5 Lead finish. The lead finish is as specified in MIL-PRF-38535 for device classes Q and V.

1.3 Absolute maximum ratings. 1/ 2/

Supply voltage (V_S) maximum voltage between V_S and GND ..... -0.5 V to 75 V
Digital inputs (IN [1:8], maximum voltage between INPUT and GND ..... -0.5 V to 15 V
Output voltage (OUT[1:8], maximum voltage between OUT [1:8] and GND ..... 75 V
Single output continuous current (OUT[1:8]) ..... -700 mA
Single output peak current (OUT[1:8], $\leq$ 1 second) ..... -1200 mA
Multiple output simultaneously continuous current (OUT[1:8]) ..... -2800 mA
Electrostatic discharge (ESD):
Human body model (HBM) all pins ..... 2000 V
Maximum junction temperature (T_J) :
Case outline X ..... +150°C
Case outline Y ..... +150°C
Storage temperature range ..... -65°C to +150°C
Lead temperature (soldering, 10 seconds) :
Case outline X ..... 300°C
Case outline Y ..... 300°C
Peak package solder reflow temperature (40 seconds maximum) :
Case outline X ..... 260°C (0°C, -5°C)
Case outline Y ..... 260°C (0°C, -5°C)
Thermal resistance, junction-to-case (θ_{JC}) :
Case outline X ..... 2.24°C/W
Case outline Y ..... 2.24°C/W

1.4 Recommended operating conditions.

Supply voltage ..... 50 V
Ambient operating temperature range (T_A) ..... -55°C to +125°C

1/ Stresses above the absolute maximum rating may cause permanent damage to the device. Extended operation at the maximum levels may degrade performance and affect reliability.
2/ All voltages are with respect to GND. Currents are positive into, negative out of specified terminal. These are stress ratings only and functional operation of the device at these or any other conditions beyond those indicated under recommended operating conditions are not implied.

2. APPLICABLE DOCUMENTS

2.1 Government specification, standards, and handbooks. The following specification, standards, and handbooks form a part of this drawing to the extent specified herein. Unless otherwise specified, the issues of these documents are those cited in the solicitation or contract.

DEPARTMENT OF DEFENSE SPECIFICATION

MIL-PRF-38535 - Integrated Circuits, Manufacturing, General Specification for.

DEPARTMENT OF DEFENSE STANDARDS

MIL-STD-883 - Test Method Standard Microcircuits.
MIL-STD-1835 - Interface Standard Electronic Component Case Outlines.

DEPARTMENT OF DEFENSE HANDBOOKS

MIL-HDBK-103 - List of Standard Microcircuit Drawings.
MIL-HDBK-780 - Standard Microcircuit Drawings.

(Copies of these documents are available online at http://quicksearch.dla.mil or from the Standardization Document Order Desk, 700 Robbins Avenue, Building 4D, Philadelphia, PA 19111-5094.)

2.2 Order of precedence. In the event of a conflict between the text of this drawing and the references cited herein, the text of this drawing takes precedence. Nothing in this document, however, supersedes applicable laws and regulations unless a specific exemption has been obtained.

3. REQUIREMENTS

3.1 Item requirements. The individual item requirements for device classes Q and V shall be in accordance with MIL-PRF-38535 as specified herein, or as modified in the device manufacturer's Quality Management (QM) plan. The modification in the QM plan shall not affect the form, fit, or function as described herein.

3.2 Design, construction, and physical dimensions. The design, construction, and physical dimensions shall be as specified in MIL-PRF-38535 and herein for device classes Q and V.

3.2.1 Case outlines. The case outlines shall be in accordance with 1.2.4 herein and figure 1.

3.2.2 Terminal connections. The terminal connections shall be as specified on figure 2.

3.2.3 Block diagram. The block diagram shall be as specified on figure 3.

3.2.4 Single channel simplified block diagram. The single channel simplified block diagram shall be as specified on figure 4.

3.2.5 Test circuits. The test circuits shall be as specified on figures 5 through 11.

3.3 Electrical performance characteristics and postirradiation parameter limits. Unless otherwise specified herein, the electrical performance characteristics and postirradiation parameter limits are as specified in table I and shall apply over the full ambient operating temperature range.

3.4 Electrical test requirements. The electrical test requirements shall be the subgroups specified in table IIA. The electrical tests for each subgroup are defined in table I.

3.5 Marking. The part shall be marked with the PIN listed in 1.2 herein. In addition, the manufacturer's PIN may also be marked. For packages where marking of the entire SMD PIN number is not feasible due to space limitations, the manufacturer has the option of not marking the "5962-" on the device. For RHA product using this option, the RHA designator shall still be marked. Marking for device classes Q and V shall be in accordance with MIL-PRF-38535.

3.5.1 Certification/compliance mark. The certification mark for device classes Q and V shall be a "QML" or "Q" as required in MIL-PRF-38535.

TABLE I. Electrical performance characteristics.

Test	Symbol	Conditions $-55°C \le T_A \le +125°C$ V_S = 50 V unless otherwise specified	Group A subgroups	Device type	Limits		Unit
					Min	Max	
Operating supply current							
Standby supply current	I_{SLEEP}	IN[1:8] = 0.0 V, no output load, see figure 5	1,2,3	01		20	µA
Active supply current	$I_{VS2.5}$	IN[1:8] = 2.5 V, no output load, see figure 6	1,2,3	01		25	mA
	I_{VS5}	IN[1:8] = 5.0 V, no output load, see figure 6				25	
DC characteristics							
Supply voltage range	V_S		1,2,3	01	10	50	V
Input high level	V_{IH}	See figure 7	1,2,3	01	2.5		V
Input low level	V_{IL}	See figure 7	1,2,3	01		0.8	V
Output saturation	VCE_{SAT}	At 350 mA, IN[1:8] = 2.5 V, see figure 8	1,2,3	01		2.2	V
		At 500 mA, IN[1:8] = 2.5 V, see figure 8				2.3	
		At 700 mA, IN[1:8] = 2.5 V, see figure 8				2.7	
Input high leakage current	I_{IH}	IN[1:8] = 5.0 V, see figure 9	1,2,3	01		100	µA
Input low leakage current	I_{IL}	IN[1:8] = 0.0 V, see figure 9	1,2,3	01		10	µA
Output low leakage current	I_{OL}	Output off, VOUTX = 0.0 V, see figure 10	1,2,3	01		50	µA
Clamp diode forward voltage	V_F	I_F = 200 mA, see figure 11	1,2,3	01		2.5	V
		I_F = 700 mA, ≤ 10 ms, see figure 11				3.0	
Clamp diode leakage current	I_R	V_R = 50 V, see figure 12	1,2,3	01		50	µA

TABLE I. Electrical performance characteristics - Continued.

Test	Symbol	Conditions $-55°C \le T_A \le +125°C$ V_S = 50 V unless otherwise specified	Group A subgroups	Device type	Limits		Unit
					Min	Max	
Timing characteristics.							
Output turn on delay time	t_{on}	V_S = 45 V, V_{IL} = 0.8 V, V_{IH} = 2.5 V, R_L = 470 Ω, C_L = 100 pF	9,10,11	01		2	µs
Output turn off delay time	t_{off}	V_S = 45 V, V_{IL} = 0.8 V, V_{IH} = 2.5 V, R_L = 470 Ω, C_L = 100 pF	9,10,11	01		10	µs
Output rise time (10% to 90%)	t_R	V_S = 45 V, V_{IL} = 0.8 V, V_{IH} = 2.5 V, R_L = 470 Ω, C_L = 100 pF	9,10,11	01		2	µs
Output fall time (90% to 10%)	t_F	V_S = 45 V, V_{IL} = 0.8 V, V_{IH} = 2.5 V, R_L = 470 Ω, C_L = 100 pF	9,10,11	01		10	µs

3.6 Certificate of compliance. For device classes Q and V, a certificate of compliance shall be required from a QML-38535 listed manufacturer in order to supply to the requirements of this drawing (see 6.6.1 herein). The certificate of compliance submitted to DLA Land and Maritime-VA prior to listing as an approved source of supply for this drawing shall affirm that the manufacturer's product meets, for device classes Q and V, the requirements of MIL-PRF-38535 and herein.

3.7 Certificate of conformance. A certificate of conformance as required for device classes Q and V in MIL-PRF-38535 shall be provided with each lot of microcircuits delivered to this drawing.

Case outline X

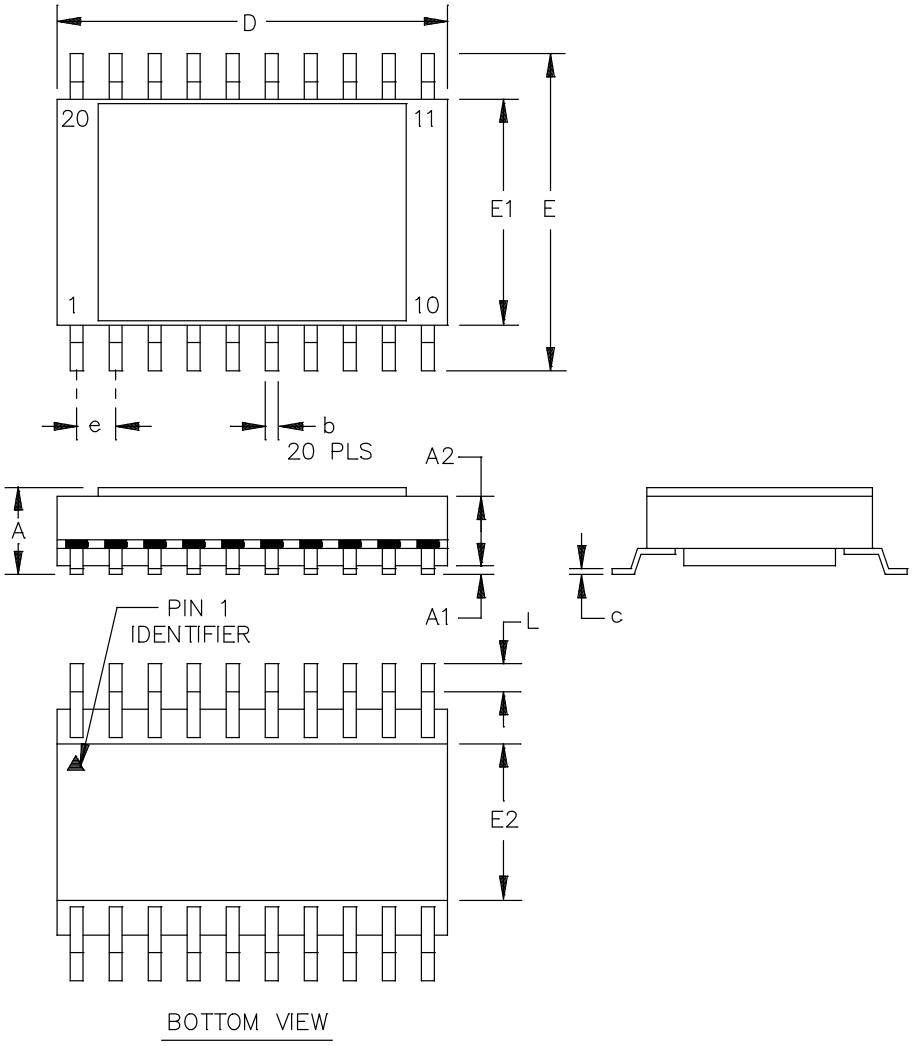

FIGURE 1. Case outlines.

Symbol	Dimensions			
	Inches		Millimeters	
	Min	Max	Min	Max
A	.090	.115	2.28	2.92
A1		.015		0.38
A2	.070	.095	1.78	2.41
b	.014	.019	0.36	0.48
c	.006	.010	0.15	0.25
D	.490	.515	12.45	13.08
E	.400	.440	10.16	11.18
E1	.285	.300	7.24	7.62
E2	.185 BSC		4.70 BSC	
e	.050 BSC		1.27 BSC	
L	.020	.030	0.50	0.76

NOTE:
1. Controlling dimensions are millimeter, inch dimensions are given for reference only.

FIGURE 1. Case outlines - continued.

Case outline Y

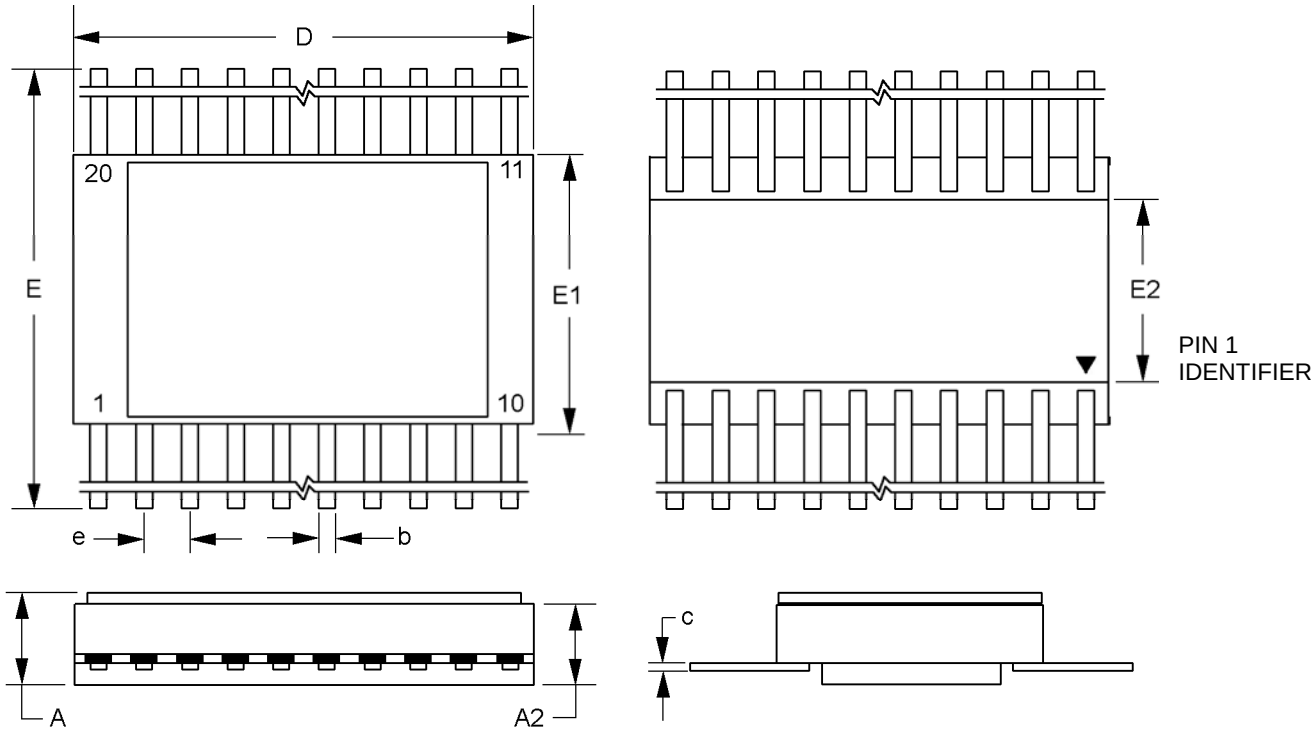

FIGURE 1. Case outlines - continued.

Symbol	Dimensions			
	Inches		Millimeters	
	Min	Max	Min	Max
A	.080	.105	2.03	2.67
A2	.070	.095	1.78	2.41
b	.140	.190	0.36	0.48
c	.006	.010	0.15	0.25
D	.490	.515	12.45	13.08
E	0.827	0.945	21.00	24.00
E1	.285	.300	7.24	7.62
E2	.185 BSC		4.70 BSC	
e	.050 BSC		1.27 BSC	

NOTE:
1. Controlling dimensions are millimeter, inch dimensions are given for reference only.

FIGURE 1. Case outlines - continued.

Device type	01
Case outlines	X and Y
Terminal number	Terminal symbol
1	V_S
2	IN 1
3	IN 2
4	IN 3
5	IN 4
6	IN 5
7	IN 6
8	IN 7
9	IN 8
10	V_S
11	GND
12	OUT 8
13	OUT 7
14	OUT 6
15	OUT 5
16	OUT 4
17	OUT 3
18	OUT 2
19	OUT 1
20	GND

Terminal number	Terminal symbol	Description
1, 10	V_S	Input voltage supply. Both pins should be externally connected on the printed circuit board (PCB) to improve the internal current distribution and allow the device to safely provide the maximum 2800 mA of continuous supply current.
2, 3, 4, 5, 6, 7, 8, 9	IN[1:8]	8 logic inputs. Transistor-transistor logic (TTL), complementary metal oxide semiconductor (CMOS) and high voltage (12 V) compatible. With all inputs low the device is in sleep mode.
11, 20	GND	Ground. Both pins should be externally connected externally on the PCB to improve the internal current distribution and improve forward voltage of the flyback clamping diodes.
12, 13, 14, 15, 16, 17, 18, 19	OUT[1:8]	700 mA source outputs.

FIGURE 2. Terminal connections.

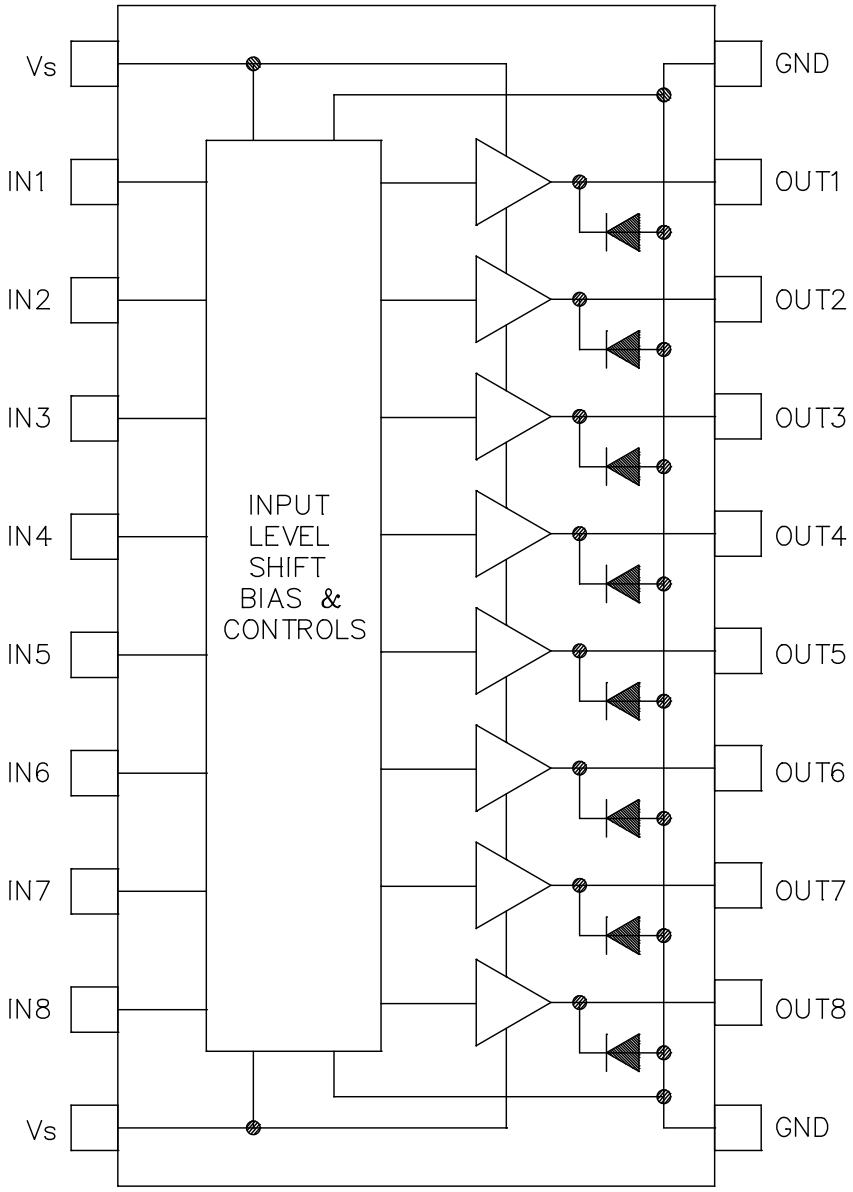

FIGURE 3. Block diagram.

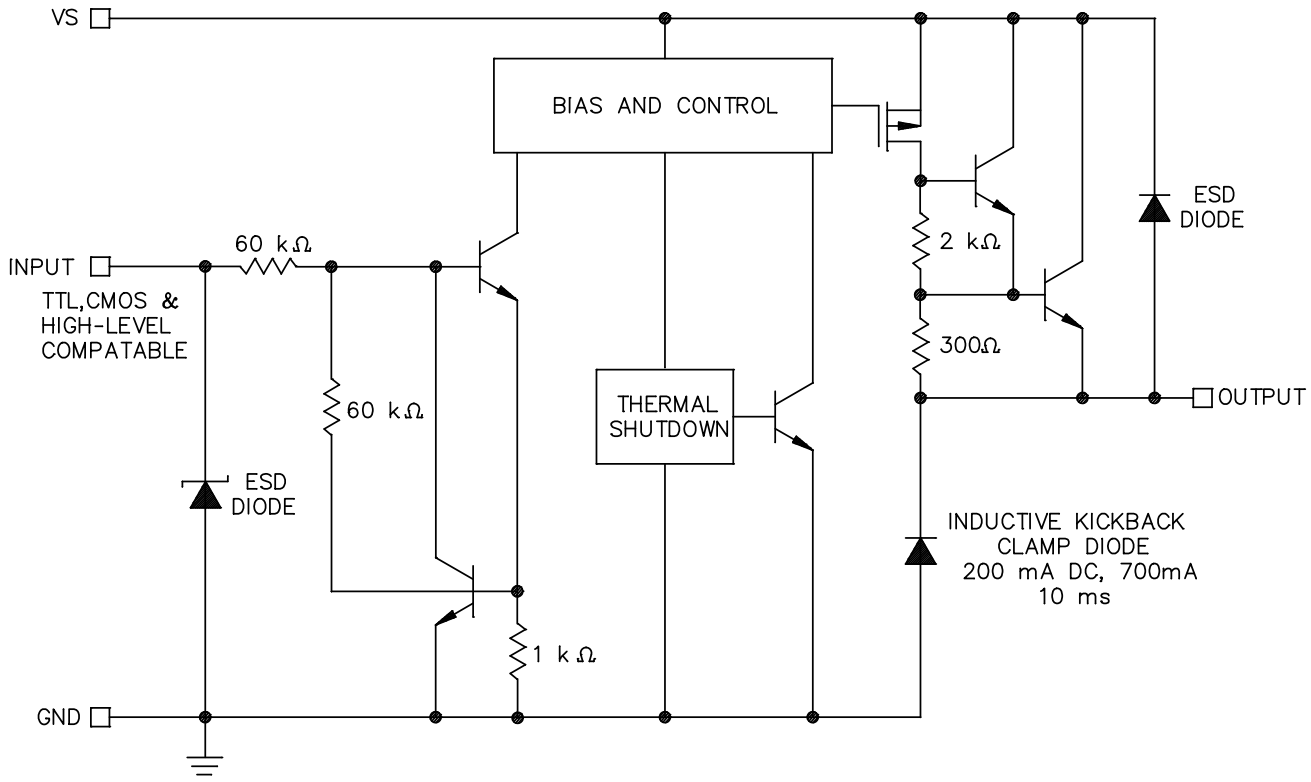

FIGURE 4. Single channel simplified block diagram.

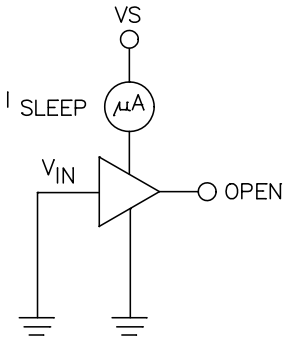

FIGURE 5. Standby supply current.

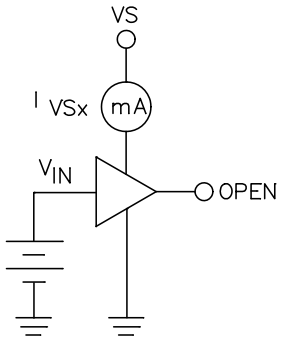

FIGURE 6. Active supply current.

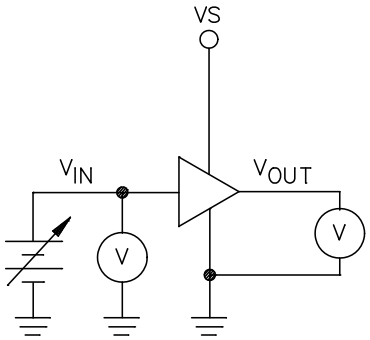

FIGURE 7. Input threshold voltage.

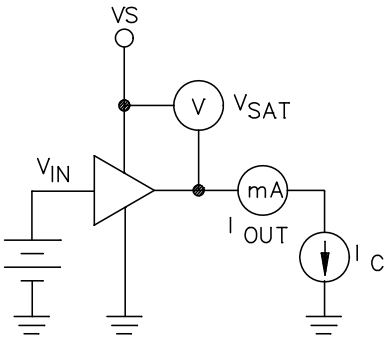

FIGURE 8. $V_{CE(sat)}$ test circuit.

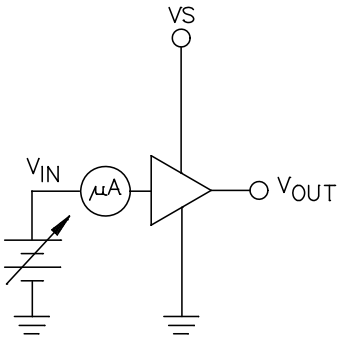

FIGURE 9. Input bias current.

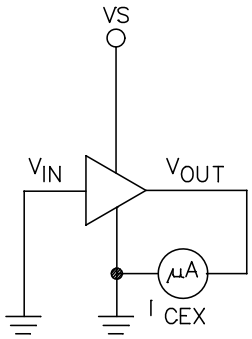

FIGURE 10. Output leakage current.

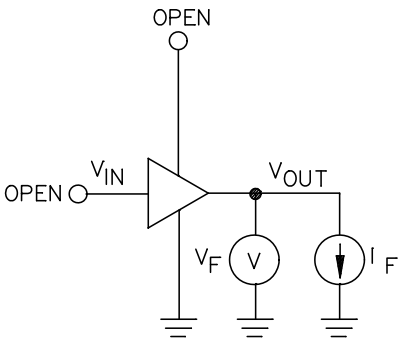

FIGURE 11. Clamp diode forward voltage.

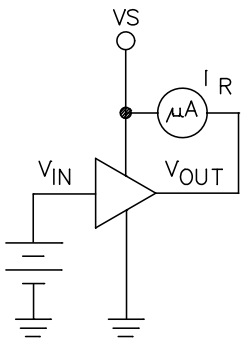

FIGURE 12. Clamp diode leakage current.

4. VERIFICATION

4.1 Sampling and inspection. For device classes Q and V, sampling and inspection procedures shall be in accordance with MIL-PRF-38535 or as modified in the device manufacturer's Quality Management (QM) plan. The modification in the QM plan shall not affect the form, fit, or function as described herein.

4.2 Screening. For device classes Q and V, screening shall be in accordance with MIL-PRF-38535, and shall be conducted on all devices prior to qualification and technology conformance inspection.

4.2.1 Additional criteria for device classes Q and V.

a. The burn-in test duration, test condition and test temperature, or approved alternatives shall be as specified in the device manufacturer's QM plan in accordance with MIL-PRF-38535. The burn-in test circuit shall be maintained under document revision level control of the device manufacturer's Technology Review Board (TRB) in accordance with MIL-PRF-38535 and shall be made available to the acquiring or preparing activity upon request. The test circuit shall specify the inputs, outputs, biases, and power dissipation, as applicable, in accordance with the intent specified in method 1015 of MIL-STD-883.

b. Interim and final electrical test parameters shall be as specified in table IIA herein.

c. Additional screening for device class V beyond the requirements of device class Q shall be as specified in MIL-PRF-38535, appendix B.

4.3 Qualification inspection for device classes Q and V. Qualification inspection for device classes Q and V shall be in accordance with MIL-PRF-38535. Inspections to be performed shall be those specified in MIL-PRF-38535 and herein for groups A, B, C, D, and E inspections (see 4.4.1 through 4.4.4).

4.4 Conformance inspection. Technology conformance inspection for classes Q and V shall be in accordance with MIL-PRF-38535 including groups A, B, C, D, and E inspections, and as specified herein.

4.4.1 Group A inspection.

a. Tests shall be as specified in table IIA herein.

b. Subgroups 4, 5, 6, 7 and 8 in table I, method 5005 of MIL-STD-883 shall be omitted.

4.4.2 Group C inspection. The group C inspection end-point electrical parameters shall be as specified in table IIA herein.

4.4.2.1 Additional criteria for device classes Q and V. The steady-state life test duration, test condition and test temperature, or approved alternatives shall be as specified in the device manufacturer's QM plan in accordance with MIL-PRF-38535. The test circuit shall be maintained under document revision level control by the device manufacturer's TRB in accordance with MIL-PRF-38535 and shall be made available to the acquiring or preparing activity upon request. The test circuit shall specify the inputs, outputs, biases, and power dissipation, as applicable, in accordance with the intent specified in method 1005 of MIL-STD-883.

4.4.3 Group D inspection. The group D inspection end-point electrical parameters shall be as specified in table IIA herein.

TABLE IIA. Electrical test requirements.

Test requirements	Subgroups (in accordance with MIL-PRF-38535, table III)	
	Device class Q	Device class V
Interim electrical parameters (see 4.2)	1, 2, 3	1, 2, 3
Final electrical parameters (see 4.2)	1, 2, 3, 9, 10, 11 1/	1, 2, 3, 9, 10, 11 1/ 2/
Group A test requirements (see 4.4)	1, 2, 3, 9, 10, 11	1, 2, 3, 9, 10, 11
Group C end-point electrical parameters (see 4.4)	1, 2, 3	1, 2, 3 2/
Group D end-point electrical parameters (see 4.4)	1, 2, 3	1, 2, 3
Group E end-point electrical parameters (see 4.4)	---	---

1/ PDA applies to subgroup 1.
2/ Delta limits as specified in table IIB herein shall be required where specified, and the delta values shall be completed with reference to the zero hour electrical parameters (see Table 1).

TABLE IIB. Burn-in and operating life test delta parameters. T_A = +25°C. 1/

Parameters	Symbol	Conditions	Device type	Delta limit
Standby supply current	I_{SLEEP}	IN[1:8] = 0.0 V, no output load	01	±0.1 µA
Active supply current	$I_{VS2.5}$	IN[1:8] = 2.5 V, no output load	01	±0.1 mA
Active supply current	$I_{VS5.0}$	IN[1:8] = 5.0 V, no output load	01	±0.1 mA
Output turn on delay time	t_{on}	V_S = 45 V, V_{IL} = 0.8 V, V_{IH} = 2.5 V, R_L = 470 Ω, C_L = 100 pF	01	±0.25 µs
Output turn off delay time	t_{off}	V_S = 45 V, V_{IL} = 0.8 V, V_{IH} = 2.5 V, R_L = 470 Ω, C_L = 100 pF	01	±0.25 µs
Output rise time (10% to 90%)	t_R	V_S = 45 V, V_{IL} = 0.8 V, V_{IH} = 2.5 V, R_L = 470 Ω, C_L = 100 pF	01	±0.2 µs
Output fall time (90% to 10%)	t_F	V_S = 45 V, V_{IL} = 0.8 V, V_{IH} = 2.5 V, R_L = 470 Ω, C_L = 100 pF	01	±0.2 µs
Input high level	V_{IH}		01	±50 mV
Input low level	V_{IL}		01	±50 mV
Input high leakage	I_{IH}	IN[1:8] = 5.0 V	01	±0.1 µA
Input low leakage	I_{IL}	IN[1:8] = 0.0 V	01	±0.1 µA

1/ These parameters shall be recorded before and after the required burn-in and life test to determine delta limits.

4.4.4 Group E inspection. Group E inspection is required only for parts intended to be marked as radiation hardness assured (see 3.5 herein).

a. End-point electrical parameters shall be as specified in table IIA herein.

b. For device classes Q and V, the devices or test vehicle shall be subjected to radiation hardness assured tests as specified in MIL-PRF-38535 for the RHA level being tested. All device classes must meet the postirradiation end-point electrical parameter limits as defined in table I at T_A = +25°C ±5°C, after exposure, to the subgroups specified in table IIA herein.

5. PACKAGING

5.1 Packaging requirements. The requirements for packaging shall be in accordance with MIL-PRF-38535 for device classes Q and V.

6. NOTES

6.1 Intended use. Microcircuits conforming to this drawing are intended for use for Government microcircuit applications (original equipment), design applications, and logistics purposes.

6.1.1 Replaceability. Microcircuits covered by this drawing will replace the same generic device covered by a contractor prepared specification or drawing.

6.2 Configuration control of SMD's. All proposed changes to existing SMD's will be coordinated with the users of record for the individual documents. This coordination will be accomplished using DD Form 1692, Engineering Change Proposal.

6.3 Record of users. Military and industrial users should inform DLA Land and Maritime when a system application requires configuration control and which SMD's are applicable to that system. DLA Land and Maritime will maintain a record of users and this list will be used for coordination and distribution of changes to the drawings. Users of drawings covering microelectronic devices (FSC 5962) should contact DLA Land and Maritime-VA, telephone (614) 692-8108.

6.4 Comments. Comments on this drawing should be directed to DLA Land and Maritime-VA, Columbus, Ohio 43218-3990, or telephone (614) 692-0540.

6.5 Abbreviations, symbols, and definitions. The abbreviations, symbols, and definitions used herein are defined in MIL-PRF-38535 and MIL-HDBK-1331.

6.6 Sources of supply.

6.6.1 Sources of supply for device classes Q and V. Sources of supply for device classes Q and V are listed in MIL-HDBK-103 and QML-38535. The vendors listed in MIL-HDBK-103 and QML-38535 have submitted a certificate of compliance (see 3.6 herein) to DLA Land and Maritime-VA and have agreed to this drawing.

STANDARD MICROCIRCUIT DRAWING BULLETIN

DATE: 17-07-14

Approved sources of supply for SMD 5962-15231 are listed below for immediate acquisition information only and shall be added to MIL-HDBK-103 and QML-38535 during the next revision. MIL-HDBK-103 and QML-38535 will be revised to include the addition or deletion of sources. The vendors listed below have agreed to this drawing and a certificate of compliance has been submitted to and accepted by DLA Land and Maritime-VA. This information bulletin is superseded by the next dated revision of MIL-HDBK-103 and QML-38535. DLA Land and Maritime maintains an online database of all current sources of supply at https://landandmaritimeapps.dla.mil/Programs/Smcr/.

Standard microcircuit drawing PIN 1/	Vendor CAGE number	Vendor similar PIN 2/
5962-1523101QXA	3/	AAHS298B-S-S20B-B
5962-1523101VXA	3/	AAHS298B-S-S20B-S
5962-1523101QXC	0J4Z0	AAHS298B-S-S20B-B
5962-1523101VXC	0J4Z0	AAHS298B-S-S20B-S
5962-1523101QYC	0J4Z0	AAHS298B-06-4020A-Q
5962-1523101VYC	0J4Z0	AAHS298B-07-4020A-V

1/ The lead finish shown for each PIN representing a hermetic package is the most readily available from the manufacturer listed for that part. If the desired lead finish is not listed, contact the vendor to determine its availability.
2/ Caution. Do not use this number for item acquisition. Items acquired to this number may not satisfy the performance requirements of this drawing.
3/ Not available from an approved source of supply.

Vendor CAGE number	Vendor name and address
0J4Z0	Microsemi SOC Corporation 3870 N. 1st Street San Jose, CA 95134-1702

The information contained herein is disseminated for convenience only and the Government assumes no liability whatsoever for any inaccuracies in the information bulletin.