

MCP3910
ADC Evaluation Board for 16-Bit MCUs User's Guide

© 2014 Microchip Technology Inc.

Note the following details of the code protection feature on Microchip devices:

- Microchip products meet the specification contained in their particular Microchip Data Sheet.
- Microchip believes that its family of products is one of the most secure families of its kind on the market today, when used in the intended manner and under normal conditions.
- There are dishonest and possibly illegal methods used to breach the code protection feature. All of these methods, to our knowledge, require using the Microchip products in a manner outside the operating specifications contained in Microchip's Data Sheets. Most likely, the person doing so is engaged in theft of intellectual property.
- Microchip is willing to work with the customer who is concerned about the integrity of their code.
- Neither Microchip nor any other semiconductor manufacturer can guarantee the security of their code. Code protection does not mean that we are guaranteeing the product as "unbreakable."

Code protection is constantly evolving. We at Microchip are committed to continuously improving the code protection features of our products. Attempts to break Microchip's code protection feature may be a violation of the Digital Millennium Copyright Act. If such acts allow unauthorized access to your software or other copyrighted work, you may have a right to sue for relief under that Act.

Information contained in this publication regarding device applications and the like is provided only for your convenience and may be superseded by updates. It is your responsibility to ensure that your application meets with your specifications. MICROCHIP MAKES NO REPRESENTATIONS OR WARRANTIES OF ANY KIND WHETHER EXPRESS OR IMPLIED, WRITTEN OR ORAL, STATUTORY OR OTHERWISE, RELATED TO THE INFORMATION, INCLUDING BUT NOT LIMITED TO ITS CONDITION, QUALITY, PERFORMANCE, MERCHANTABILITY OR FITNESS FOR PURPOSE**.** Microchip disclaims all liability arising from this information and its use. Use of Microchip devices in life support and/or safety applications is entirely at the buyer's risk, and the buyer agrees to defend, indemnify and hold harmless Microchip from any and all damages, claims, suits, or expenses resulting from such use. No licenses are conveyed, implicitly or otherwise, under any Microchip intellectual property rights.

Trademarks

The Microchip name and logo, the Microchip logo, dsPIC, FlashFlex, KEELOQ, KEELOQ logo, MPLAB, PIC, PICmicro, PICSTART, PIC^{32} logo, rfPIC, SST, SST Logo, SuperFlash and UNI/O are registered trademarks of Microchip Technology Incorporated in the U.S.A. and other countries.

FilterLab, Hampshire, HI-TECH C, Linear Active Thermistor, MTP, SEEVAL and The Embedded Control Solutions Company are registered trademarks of Microchip Technology Incorporated in the U.S.A.

Silicon Storage Technology is a registered trademark of Microchip Technology Inc. in other countries.

Analog-for-the-Digital Age, Application Maestro, BodyCom, chipKIT, chipKIT logo, CodeGuard, dsPICDEM, dsPICDEM.net, dsPICworks, dsSPEAK, ECAN, ECONOMONITOR, FanSense, HI-TIDE, In-Circuit Serial Programming, ICSP, Mindi, MiWi, MPASM, MPF, MPLAB Certified logo, MPLIB, MPLINK, mTouch, Omniscient Code Generation, PICC, PICC-18, PICDEM, PICDEM.net, PICkit, PICtail, REAL ICE, rfLAB, Select Mode, SQI, Serial Quad I/O, Total Endurance, TSHARC, UniWinDriver, WiperLock, ZENA and Z-Scale are trademarks of Microchip Technology Incorporated in the U.S.A. and other countries.

SQTP is a service mark of Microchip Technology Incorporated in the U.S.A.

GestIC and ULPP are registered trademarks of Microchip Technology Germany II GmbH & Co. KG, a subsidiary of Microchip Technology Inc., in other countries.

All other trademarks mentioned herein are property of their respective companies.

© 2014, Microchip Technology Incorporated, Printed in the U.S.A., All Rights Reserved.

Printed on recycled paper.

ISBN: 978-1-63276-229-0

QUALITY MANAGEMENT SYSTEM
CERTIFIED BY DNV
═ ISO/TS 16949 ═

Microchip received ISO/TS-16949:2009 certification for its worldwide headquarters, design and wafer fabrication facilities in Chandler and Tempe, Arizona; Gresham, Oregon and design centers in California and India. The Company's quality system processes and procedures are for its PIC® MCUs and dsPIC® DSCs, KEELOQ® code hopping devices, Serial EEPROMs, microperipherals, nonvolatile memory and analog products. In addition, Microchip's quality system for the design and manufacture of development systems is ISO 9001:2000 certified.

© 2014 Microchip Technology Inc.

Object of Declaration: MCP3910 ADC Evaluation Board for 16-Bit MCUs

EU Declaration of Conformity

This declaration of conformity is issued by the manufacturer.
The development/evaluation tool is designed to be used for research and development in a laboratory environment. This development/evaluation tool is not a Finished Appliance, nor is it intended for incorporation into Finished Appliances that are made commercially available as single functional units to end users under EU EMC Directive 2004/108/EC and as supported by the European Commission's Guide for the EMC Directive 2004/108/EC (8th February 2010).
This development/evaluation tool complies with EU RoHS2 Directive 2011/65/EU.
For information regarding the exclusive, limited warranties applicable to Microchip products, please see Microchip's standard terms and conditions of sale, which are printed on our sales documentation and available at www.microchip.com.
Signed for and on behalf of Microchip Technology Inc. at Chandler, Arizona, USA

Derek Carlson
VP Development Tools

16-July-2013
Date

NOTES:

© 2014 Microchip Technology Inc.

MCP3910 ADC EVALUATION BOARD FOR 16-BIT MCUs USER'S GUIDE

Table of Contents

Preface 7

Introduction 7

Document Layout 7

Conventions Used in this Guide 8

Recommended Reading 9

The Microchip Web Site 9

Customer Support 9

Document Revision History 9

Chapter 1. Hardware Description

1.1 Overview 11

1.2 Non-Isolated MCP3910(N) SPI Mode Connection, PIM Module and Peripheral Usage Overview 13

1.3 Non-Isolated MCP3910(N) 2-Wire Mode Connection, PIM Module and Peripheral Usage Overview 14

1.4 Analog Input Structure 16

1.5 Universal Serial Bus (USB) 17

Chapter 2. 2-Wire Mode Firmware Description

2.1 Overview 19

2.2 PIC24FJ128GA110 Firmware Description for 2-Wire Mode Only 19

2.3 Data Acquisition 19

2.4 UART Communication Protocol 20

Chapter 3. Evaluation Board PC Software

3.1 Overview 21

Appendix A. Schematics and Layouts

A.1 Introduction 23

A.2 Schematic - Analog, MCP3910(N), MCP3910(A) 24

A.3 Schematic - Analog, MCP3910(B), MCP3910(C) 25

A.4 Schematic - USB and Memory 26

A.5 Schematic - Microcontroller (MCU) 27

A.6 Schematic - PIM Module 28

A.7 Schematic - Power 29

A.8 Board - Top Trace and Top Silk 30

A.9 Board - Bottom Trace and Bottom Silk 30

A.10 Board - Layer #2 VDD 31

© 2014 Microchip Technology Inc.

A.11 Board - Layer #3 GND 31
A.12 Board - Top SILK and PADS 32
A.13 Board - Bottom SILK and PADS 32

Appendix B. Bill of Materials (BOM)

Worldwide Sales and Service 36

© 2014 Microchip Technology Inc.

MCP3910 ADC EVALUATION BOARD FOR 16-BIT MCUs USER'S GUIDE

Preface

NOTICE TO CUSTOMERS

All documentation becomes dated, and this manual is no exception. Microchip tools and documentation are constantly evolving to meet customer needs, so some actual dialogs and/or tool descriptions may differ from those in this document. Please refer to our web site (www.microchip.com) to obtain the latest documentation available.

Documents are identified with a "DS" number. This number is located on the bottom of each page, in front of the page number. The numbering convention for the DS number is "DSXXXXXA", where "XXXXX" is the document number and "A" is the revision level of the document.

For the most up-to-date information on development tools, see the MPLAB® IDE online help. Select the Help menu, and then Topics to open a list of available online help files.

INTRODUCTION

This chapter contains general information that will be useful to know before using the MCP3910 ADC Evaluation Board for 16-Bit MCUs. Items discussed in this chapter include:

- Document Layout
- Conventions Used in this Guide
- Recommended Reading
- The Microchip Web Site
- Customer Support
- Document Revision History

DOCUMENT LAYOUT

This document describes how to use the MCP3910 ADC Evaluation Board for 16-Bit MCUs as a development tool to emulate and debug firmware on a target board. The manual layout is as follows:

- **Chapter 1. "Hardware Description"** – Provides important information about the MCP3910 ADC Evaluation Board for 16-Bit MCUs hardware.
- **Chapter 2. "2-Wire Mode Firmware Description"** – Describes the MCP3910 ADC Evaluation Board for 16-Bit MCUs 2-Wire firmware.
- **Chapter 3. "Evaluation Board PC Software"** – Provides information about the evaluation board software.
- **Appendix A. "Schematics and Layouts"**– Shows the schematic and board layout for the MCP3910 ADC Evaluation Board for 16-Bit MCUs.
- **Appendix B. "Bill of Materials (BOM)"** – Lists the parts used to build the MCP3910 ADC Evaluation Board for 16-Bit MCUs.

CONVENTIONS USED IN THIS GUIDE

This manual uses the following documentation conventions:

DOCUMENTATION CONVENTIONS

Description	Represents	Examples
Arial font:		
Italic characters	Referenced books	*MPLAB® IDE User's Guide*
	Emphasized text	...is the *only* compiler...
Initial caps	A window	the Output window
	A dialog	the Settings dialog
	A menu selection	select Enable Programmer
Quotes	A field name in a window or dialog	"Save project before build"
Underlined, italic text with right angle bracket	A menu path	*File>Save*
Bold characters	A dialog button	Click **OK**
	A tab	Click the **Power** tab
N'Rnnnn	A number in verilog format, where N is the total number of digits, R is the radix and n is a digit.	4'b0010, 2'hF1
Text in angle brackets < >	A key on the keyboard	Press <Enter>, <F1>
Courier New font:		
Plain Courier New	Sample source code	`#define START`
	Filenames	`autoexec.bat`
	File paths	`c:\mcc18\h`
	Keywords	`_asm, _endasm, static`
	Command-line options	`-Opa+, -Opa-`
	Bit values	`0, 1`
	Constants	`0xFF, 'A'`
Italic Courier New	A variable argument	*`file`*`.o`, where *`file`* can be any valid filename
Square brackets [ ]	Optional arguments	`mcc18 [options]` *`file`* `[options]`
Curly brackets and pipe character: { | }	Choice of mutually exclusive arguments; an OR selection	`errorlevel {0|1}`
Ellipses...	Replaces repeated text	`var_name [, var_name...]`
	Represents code supplied by user	`void main (void) { ... }`

© 2014 Microchip Technology Inc.

RECOMMENDED READING

This user's guide describes how to use the MCP3910 ADC Evaluation Board for 16-Bit MCUs. The following Microchip document is available and recommended as a supplemental reference resource:

- **MCP3910 Data Sheet - *"3.3V Two Channel Analog Front End"* (DS25116)**

THE MICROCHIP WEB SITE

Microchip provides online support via our web site at www.microchip.com. This web site is used as a means to make files and information easily available to customers. Accessible by using your favorite Internet browser, the web site contains the following information:

- **Product Support** – Data sheets and errata, application notes and sample programs, design resources, user's guides and hardware support documents, latest software releases and archived software
- **General Technical Support** – Frequently Asked Questions (FAQs), technical support requests, online discussion groups, Microchip consultant program member listing
- **Business of Microchip** – Product selector and ordering guides, latest Microchip press releases, listing of seminars and events, listings of Microchip sales offices, distributors and factory representatives

CUSTOMER SUPPORT

Users of Microchip products can receive assistance through several channels:

- Distributor or Representative
- Local Sales Office
- Field Application Engineer (FAE)
- Technical Support

Customers should contact their distributor, representative or field application engineer (FAE) for support. Local sales offices are also available to help customers. A listing of sales offices and locations is included in the back of this document.

Technical support is available through the web site at: http://support.microchip.com.

DOCUMENT REVISION HISTORY

Revision A (May 2014)

- Initial Release of this Document.

NOTES:

© 2014 Microchip Technology Inc.

Chapter 1. Hardware Description

1.1 OVERVIEW

The MCP3910 ADC Evaluation Board for 16-Bit MCUs provides the opportunity to evaluate the performance of the MCP3910 dual-channel ADCs in a multiple device, isolated system. It comes with four MCP3910s, operating in 2-Wire Serial Interface Mode only. Throughout this document, they will be described as MCP3910(N), MCP3910(A), MCP3910(B), and MCP3910(C). The MCP3910(N) is for neutral connection and is non-isolated.

It also provides a development platform for 16-bit PIC® microcontroller-based applications, using existing 100-pin PIM systems, compatible with the Explorer 16 and other high pin count PIC® device demo boards. The system comes with programmed PIC24FJ256GA110 PIM modules that communicate with the GUI for data exchange.

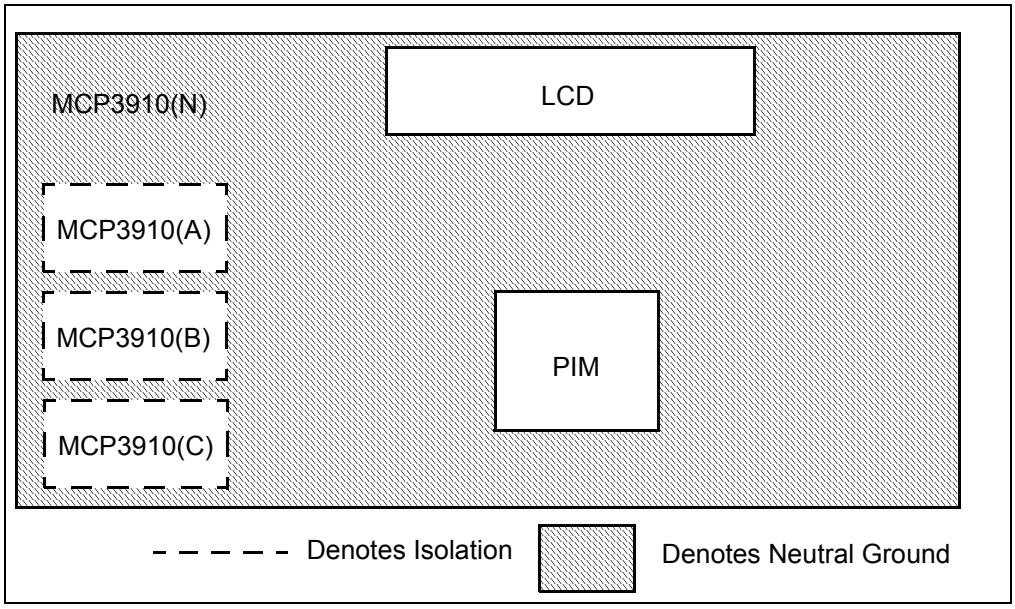

FIGURE 1-1: *Isolated and Non-Isolated Sections of the Evaluation Board.*

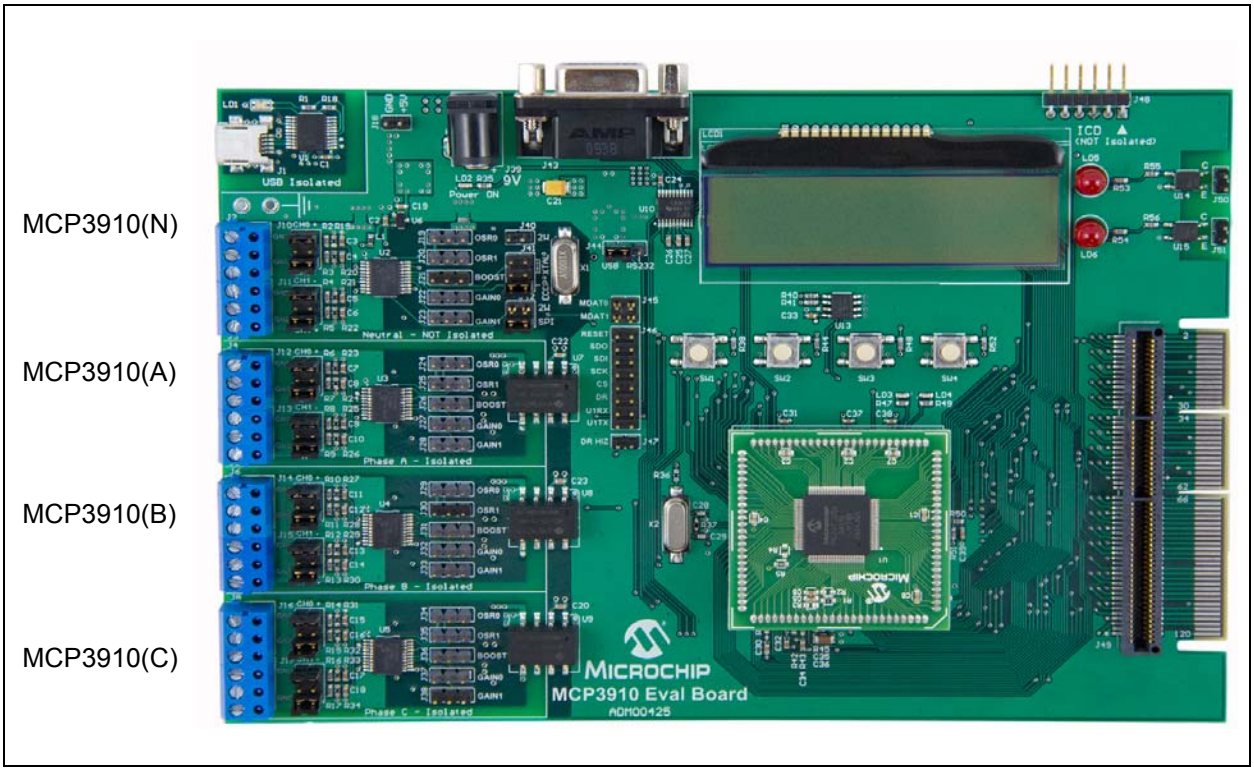

FIGURE 1-2: *MCP3910 Evaluation Board.*

1.1.1 Feature Highlights

- Four MCP3910 devices for complete 3-phase isolated and neutral system evaluation.
- Selectable Phase A, B, C, or N (neutral) MCP3910 dual channel output display, using serial communication to the PC Software Interface.
- Simultaneous 7.2 ksps at 95 dB SINAD performance on any MCP3910 channel.
- Single-phase MCP3910 performance analysis through graphical PC tools showing Noise Histogram, Frequency Domain (FFT), Time domain scope plot, and statistical numerical analysis.
- Robust hardware design with analog grounding and analog/digital separation, allowing low noise evaluation of MCP3910 devices. Includes separate power supplies and power planes on a 4-layer board.
- PICtail® Plus connectors for Explorer 16 daughter board compatibility.

© 2014 Microchip Technology Inc.

1.2 NON-ISOLATED MCP3910(N) SPI MODE CONNECTION, PIM MODULE AND PERIPHERAL USAGE OVERVIEW

The MCP3910 ADC Evaluation Board for 16-Bit MCUs contains a 100-pin PIM socket compatible with Microchip's PIM modules. The system comes with a single PIM module: the PIC24FJ128GA110.

There are four MCP3910 devices on this demo board. This section describes U2, the MCP3910(N) that can be used in SPI mode and is connected to the PIM module, as shown below. To use the MCP3910(N) in SPI mode, the following jumpers need to be populated, J41 and J42. J40 is connected to the **MODE** pin on the MCP3910N and puts it into SPI interface mode on power-up, when not populated. J42 connects the SCK/MCLK pin to the SCK clock signal generated by the MCU. In SPI mode, the jumpers J19, J20, J21 and J22 should not be populated, allowing the MCU signals to reach to the MCP3910's pins.

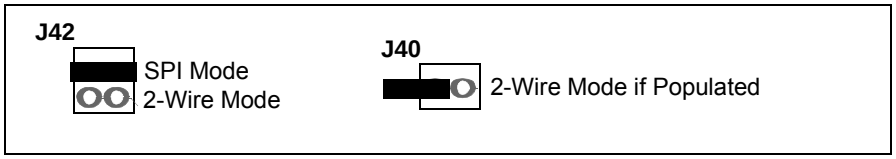

FIGURE 1-3: *Selecting the MCP3910(N) to be Used in SPI Mode.*

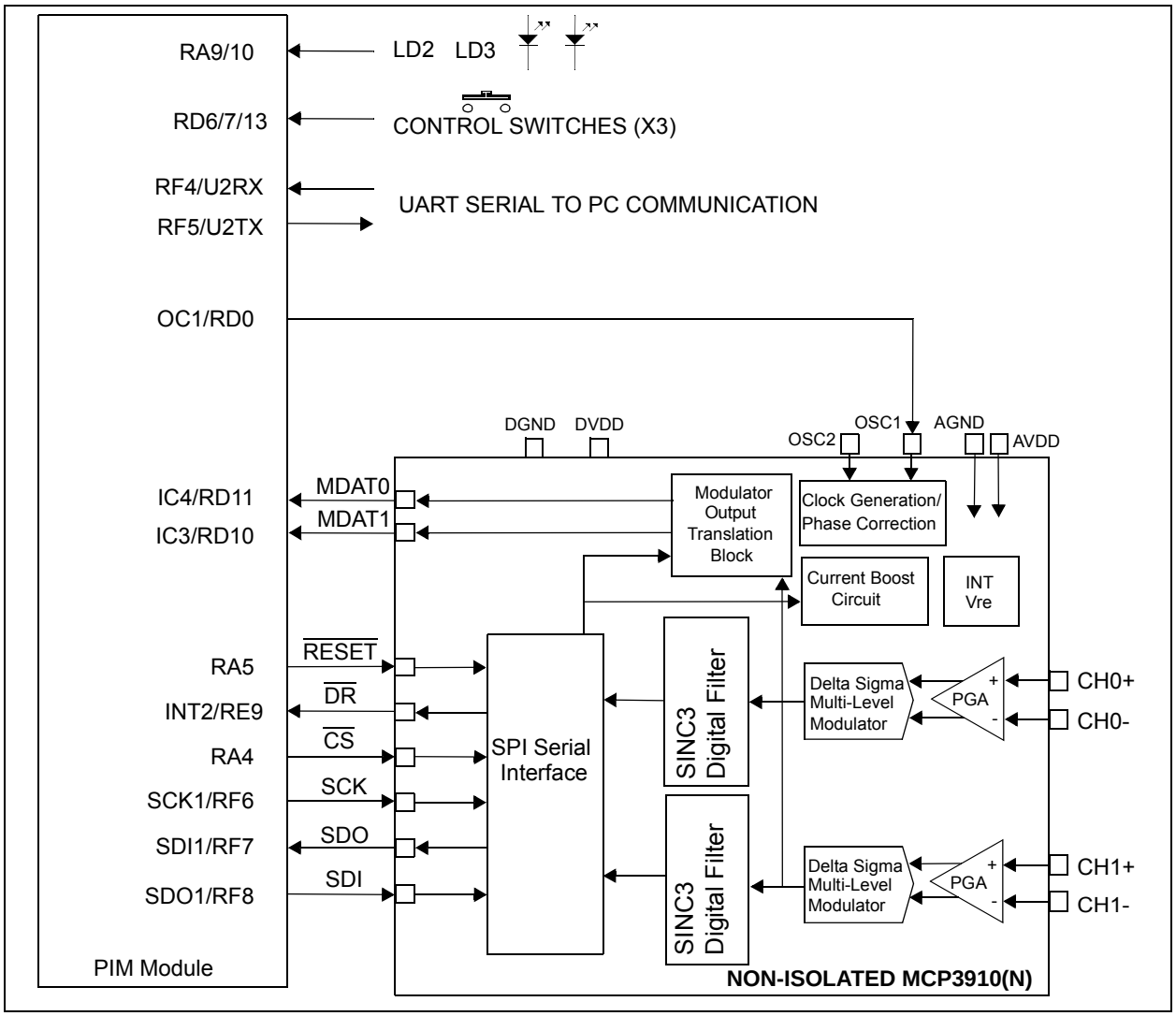

FIGURE 1-4: *Digital Connection Overview PIM / MCP3910 Non-Isolated Connections (Neutral).*

Ports A, D, E and F are used for signals such as push buttons, output LEDs, $\overline{CS}$ and $\overline{MCLR}$ (for the MCP3910 (N) data mode setting). Output Capture 1 is used for all MCP3910's clock generation.

The MCP3910 device is an ADC with a second order modulator and a third order sinc filter, plus a first order sinc filter used for higher OSR's values. This Delta-Sigma A/D converter has an adjustable oversampling ratio. The CLKIN pin of the MCP3910 is the oversampling clock (MCLK) input. The MCP3910 ADC Evaluation Board for 16-Bit MCUs offers two different options for the MCP3910(N) master clock (MCLK).

1.2.1 Using the Crystal X1 for MCP3910(N)

The MCP3910 ADC Evaluation Board for 16-Bit MCUs is populated with a 10 MHz crystal, used as a clock source, by placing jumpers in the following position on the MCP3910 Digital I/O header block:

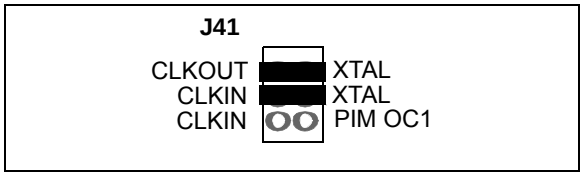

FIGURE 1-5: *MCP3910(N) Clock Selection Jumpers - External Crystal.*

1.2.2 Driving the Clock with the PIM Module

The PIC® microcontroller can be used to generate the CLKIN (MCLK) signal for the MCP3910(N), setting the ADC sample rate through the use of the output compare module OC1. To use this, make the following jumper change to the MCP3910(N) Digital I/O header block:

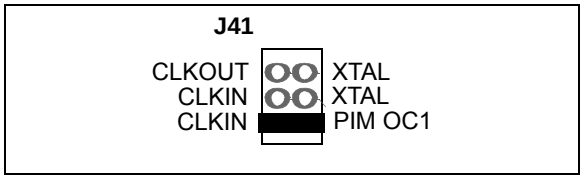

FIGURE 1-6: *MCP3910(N) Clock Selection Jumpers - Clock from MCU.*

Note:	Although the hardware supports the SPI mode on the MCP3910(N), the actual firmware supports only the 2-wire mode for all channels and only the Clock from MCU selection. Please position the jumpers accordingly.

1.3 NON-ISOLATED MCP3910(N) 2-WIRE MODE CONNECTION, PIM MODULE AND PERIPHERAL USAGE OVERVIEW

To use the MCP3910(N) in 2-Wire Interface Mode, the following two jumpers need to be populated: J40 is connected to the **MODE** pin on the MCP3910N and puts it into 2-Wire Interface Mode on power-up. J42 connects the MCLK/SCK pin to the PWM clock signal generated by the MCU. The jumpers J19, J20, J21 and J22 should be populated according to the settings.

In 2-Wire mode, the clock of the MCP3910(N) is the same clock used for all MCP3910 devices, so J41 jumper should not be populated.

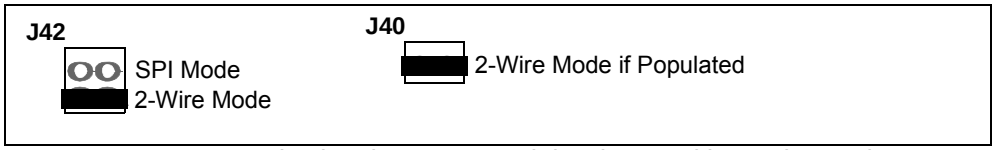

FIGURE 1-7: *Selecting the MCP3910(N) to be Used in 2-Wire Mode.*

© 2014 Microchip Technology Inc.

1.3.0.1 THE ISOLATED MCP3910(A), MCP3910(B), AND MCP3910(C) CONFIGURATION

The other three MCP3910 devices are always operating in 2-Wire interface mode, and the following figure describes their configuration. On the top side of the board, jumpers are present to set the OSR, GAIN and BOOST settings. Power isolation is performed by the 5V DC/DC converter, and digital I/O isolation is performed by the FOD8012 device on the bottom side of the board. Please refer to the MCP3910 data sheet for OSR, GAIN and BOOST configuration. Jumpers populated on the left select the value '1', while on the right, the value is '0'.

For a 3-phase configuration, OSR settings must be the same in order to assure the synchronization between the channels. Please note that OSR 64 is not supported in the current FW.

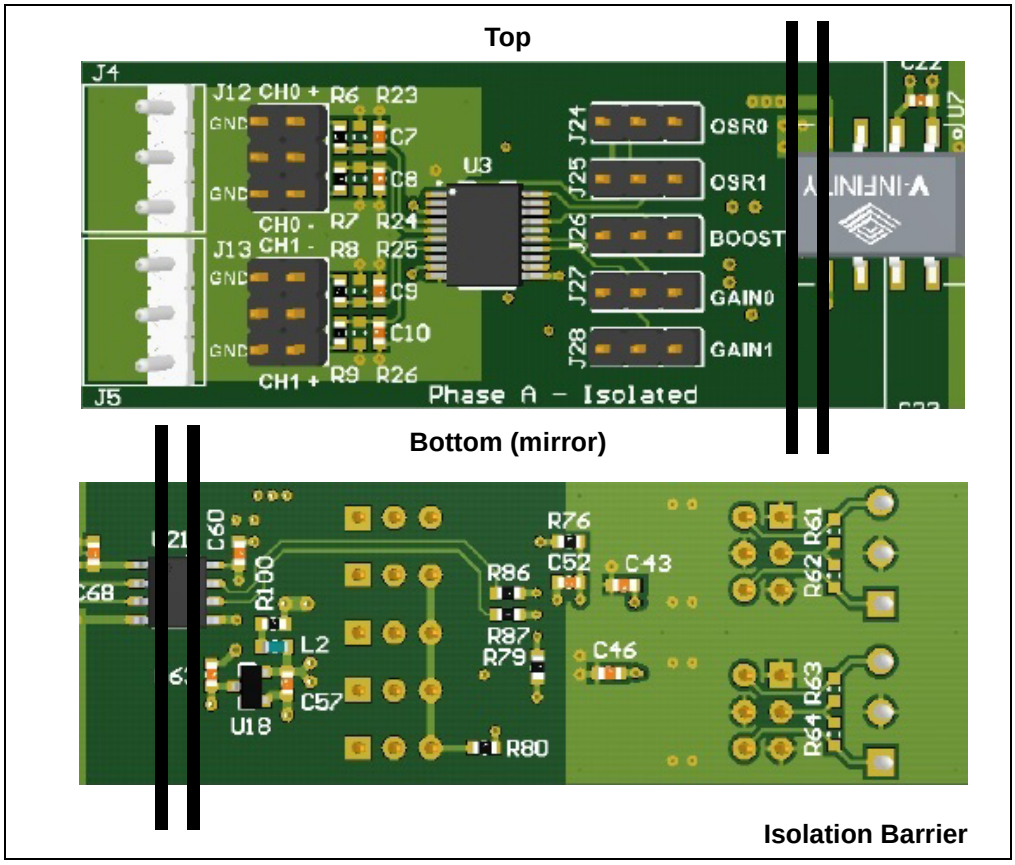

FIGURE 1-8: *Isolated MCP3910(A), MCP3910(B), and MCP3910(C) Description.*

1.3.0.2 THE ISOLATED MCP3910(A), MCP3910(B), AND MCP3910(C) 2-WIRE DIGITAL CONNECTION

These devices all use the OC1/RD0 for the MCLK input. The individual SDO connections go to RC3, RC2 and RC1 for each MCP3910(A), MCP3910(B), and MCP3910(C), respectively. By using the pin remapping feature, inside the MCU the signals are multiplexed to a single SPI module.

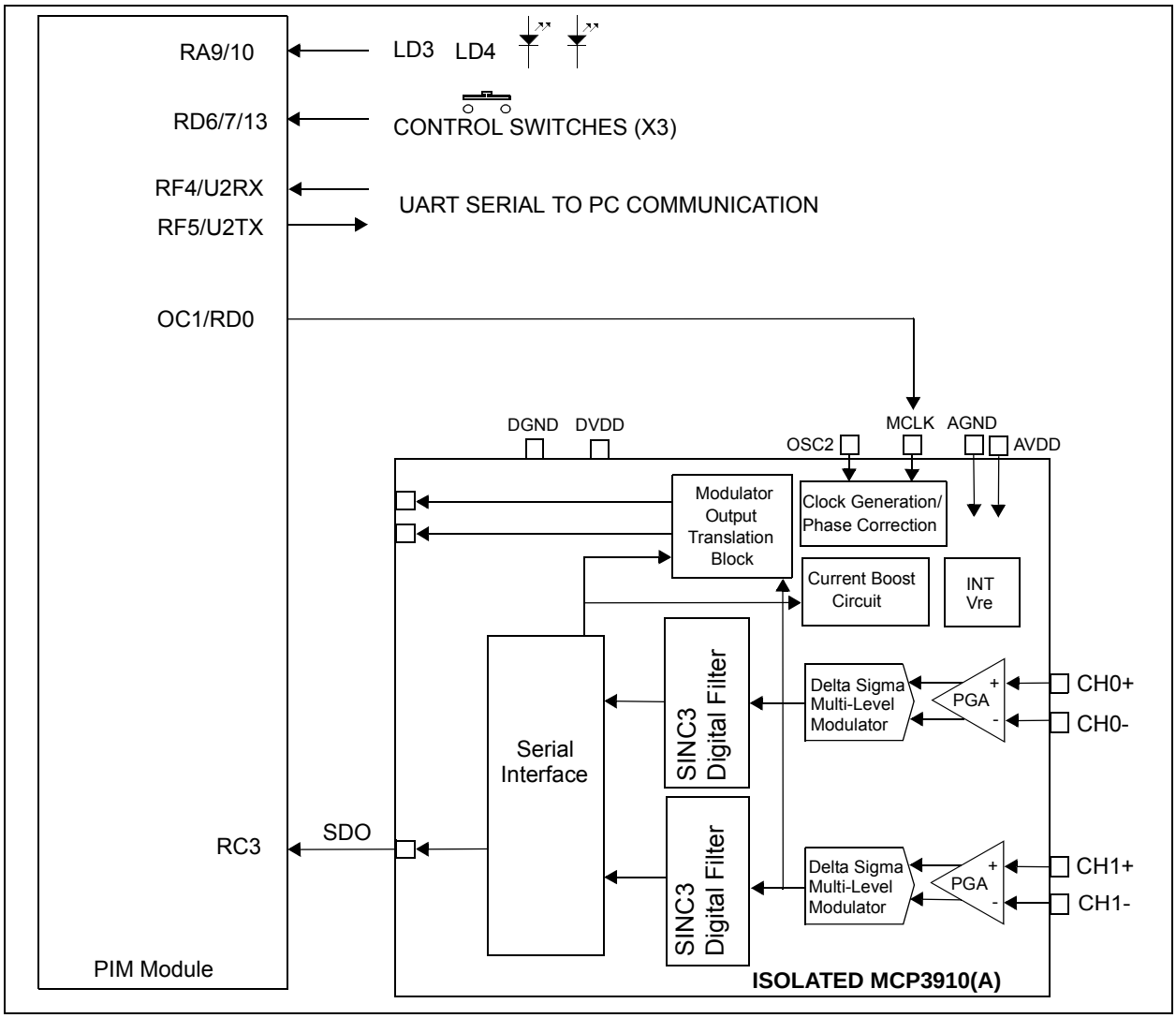

FIGURE 1-9: *Digital Connection Overview PIM/MCP3910(A) Isolated Connections.*

1.4 ANALOG INPUT STRUCTURE

Two differential input paths allow external signal sources to be easily connected to each MCP3910 input. Edge connectors are 3-pin connectors that act as both crew-type and clip-on post connectors.

> **Note:** To use an edge connector as a post connector, pull up the blue plastic top to access the posts.

They can be used to force either channel from a differential to single-ended configuration. Resistors act as locations for burden resistor connectors for any current transformer inputs.

© 2014 Microchip Technology Inc.

1.5 UNIVERSAL SERIAL BUS (USB)

The MCP3910 ADC Evaluation Board for 16-Bit MCUs also contains an isolated USB connection for connecting the evaluation board to a PC. On the board, there is an MCP2200 USB to UART converter that creates a virtual COM port on the PC. The MCP3910 ADC Evaluation Board for 16-Bit MCUs also features a RS232 connector. The RS232 line driver is connected to the same UART pins of the MCU. For this reason, a 3-pin jumper (J44) is present on the evaluation board to select which serial communication will be used: USB or RS232. The following figure summarizes the connections between the ADC, MCU, USB to serial converter and the RS232 line driver.

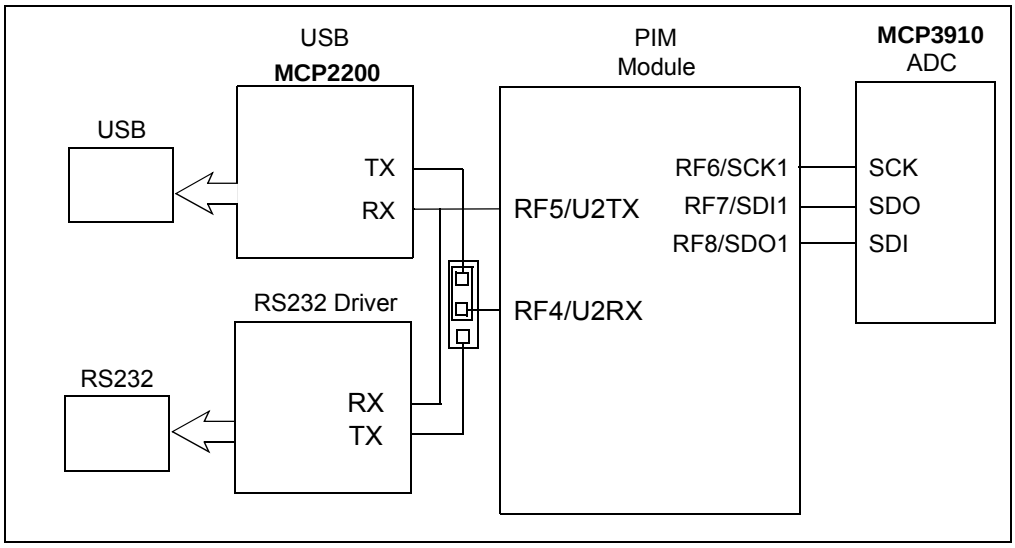

FIGURE 1-10: *USB Block Diagram.*

The MCP2200 is powered from the USB with 5V.

The 7.3728 MHz value of the crystal is required to achieve the correct baud rate values, even for higher speed. This design uses a baud rate of 921.6 kbaud, and for this baud rate, the register U1BRG value is 3 (decimal).

NOTES:

© 2014 Microchip Technology Inc.

Chapter 2. 2-Wire Mode Firmware Description

2.1 OVERVIEW

The MCP3910 ADC Evaluation Board for 16-Bit MCUs supports only 2-Wire serial communication.

Note: The latest firmware and user's guide are available on the Microchip web site at www.microchip.com/ProductSearch.aspx?Keywords=ADM00425.

2.2 PIC24FJ128GA110 FIRMWARE DESCRIPTION FOR 2-WIRE MODE ONLY

2.2.1 MCU Initialization

The microcontroller used for the code example is the 16-bit XLP, with 16 MIPS PIC24FJ128GA110. The MCU has remappable pins and an Output Compare module with a dedicated time base.

The MCU uses a 7.3278 MHz crystal for the clock and the internal PLL to increase the frequency four times. The remappable pins are configured to make the PIM compatible with the Explorer 16. The ADC clock is given by OC1.

Serial data transmission uses the UART1 module for transmission and the communication speed is 921.6 kBaud.

2.3 DATA ACQUISITION

In 2-Wire mode, the MCP3910 lacks the DR output, which signals when the ADC conversion is complete, so another method must be used for data acquisition.

Once the clock is started, the MCP3910 device keeps sending the data on SDO output, according to the protocol described in the data sheet.

The synchronization between all four channels requires very precise timing when reading the data on the 2-Wire interface.

A special configuration has been developed, where the SPI module of the MCU is configured as slave.

The ADC clock is generated by the output compare and is redirected inside the MCU to the SCK input of the SPI module. The clock frequency is approximately 3.6864 MHz.

The SDI input must be multiplexed between four external pins, one for each MCP3910, in real time.

Because of the high amount of data (for OSR 64, there are no pauses between the packets of data), it is not an easy task and this is the reason why OSR 64 is not supported in this firmware release.

When a new buffer begins to be read, Timer4 is started. This is set as a 32-bit timer, together with Timer5. It will be stopped when the buffer is full and it is used to measure the sampling speed.

The acquired samples are written in six long vectors created in the RAM of the MCU. The six vectors hold the first, second and third byte from both channels.

They have a length of 2048 samples. When the buffer is full, the SPI1 interrupt is disabled and the transmission of acquired data begins.

The value of Timer 4, and the values of the other registers inside the ADC, are stored in a vector called "internal_registers[24]".

2.4 UART COMMUNICATION PROTOCOL

The communication uses handshaking, meaning that the board will not send data to the PC unless the board receives a command from the PC.

Following are the commands sent by the PC:

- 'i' Identify command. The response is the board ID value ("ADM00425").
- 's' Start command. The board starts sending the data until the stop command is received.
- 'p' Stop command. It ends the data transmission.
- 'R' Read internal registers. The board sends the settings of the devices detected at startup, as configured by the jumpers.
- 'v' Firmware version request. The board sends the current firmware version.
- 't' Tempo adjustment. Allows adjustment of the tempo/rate of data transmission.
- 'C' Channel select. Allows the selection of the data to be displayed.
- 'c' Reads the current channel selection.

The following protocol is implemented:

- The character '!' is sent first and used to indicate the start of data samples.
- The data from the first channel and second channel of the selected MCP3910 is sent after that, separated by a comma. A semicolon separates each pair of sample data from the next sample pair. A colon (instead of the semicolon) is sent after the last data set, followed by the value of Timer 4 (two sets of values separated by a comma).
- CR (0x0D in hex) is sent at the end of the packet.
- Each data sent is, in fact, a string of decimal digits (representing the decimal conversion of the hex value).

© 2014 Microchip Technology Inc.

Chapter 3. Evaluation Board PC Software

3.1 OVERVIEW

This evaluation board uses the Energy Management Utility software for evaluation of the MCP3910 via a USB connection to the board. A download link for this software can be found on the evaluation board's web page. For instructions on the use of this software, refer to the software's supporting documentation included within the application install package.

NOTES:

© 2014 Microchip Technology Inc.

Appendix A. Schematics and Layouts

A.1 INTRODUCTION

This appendix contains the following schematics of the MCP3910 ADC Evaluation Board for 16-Bit MCUs:

- Schematic - Analog, MCP3910(N), MCP3910(A)
- Schematic - Analog, MCP3910(B), MCP3910(C)
- Schematic - USB and Memory
- Schematic - Microcontroller (MCU)
- Schematic - PIM Module
- Schematic - Power
- Board - Top Trace and Top Silk
- Board - Bottom Trace and Bottom Silk
- Board - Layer #2 V_{DD}
- Board - Layer #3 GND
- Board - Top Silk and Pads
- Board - Bottom Silk and Pads

A.2 SCHEMATIC - ANALOG, MCP3910(N), MCP3910(A)

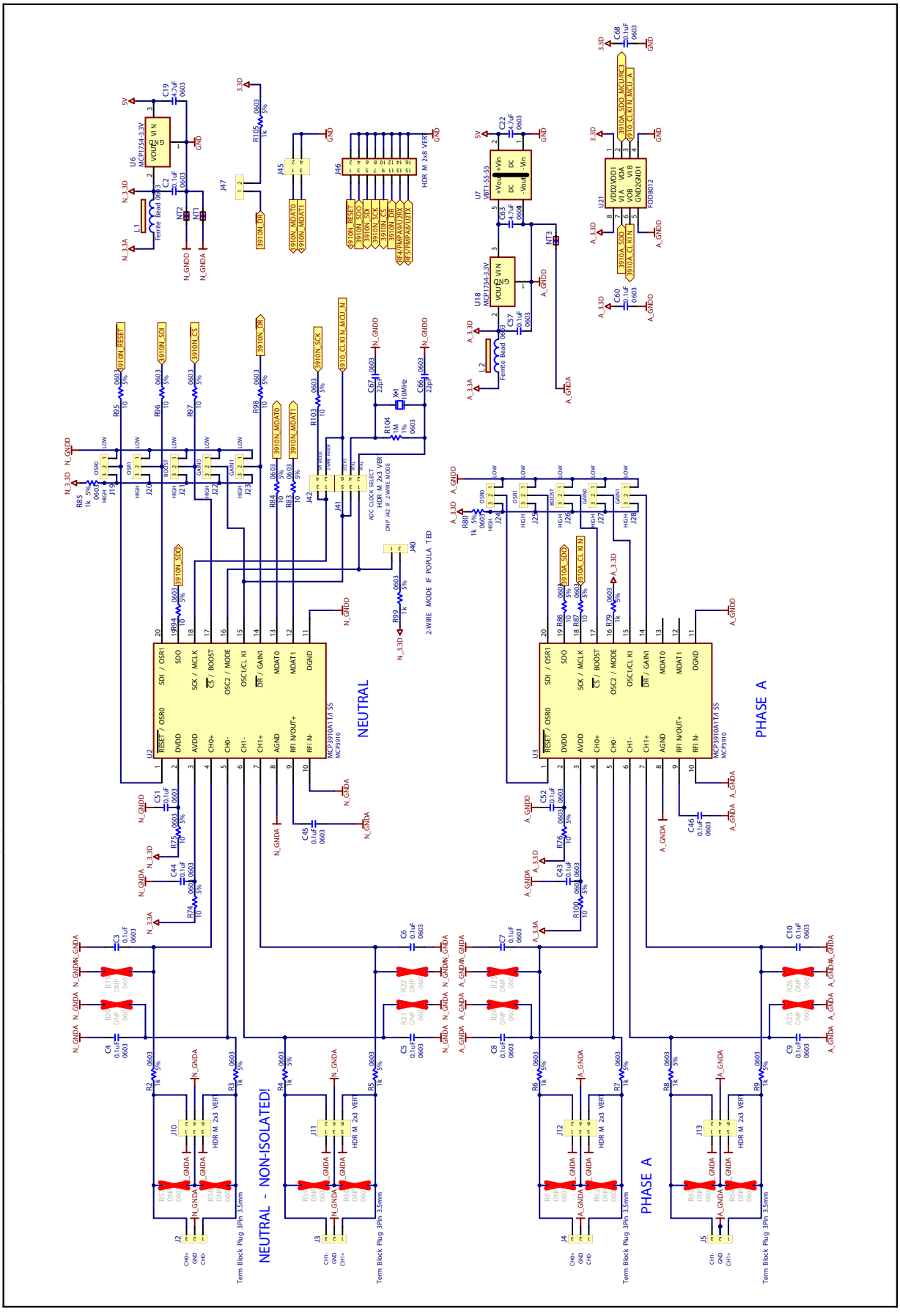

A.3 SCHEMATIC – ANALOG, MCP3910(B), MCP3910(C)

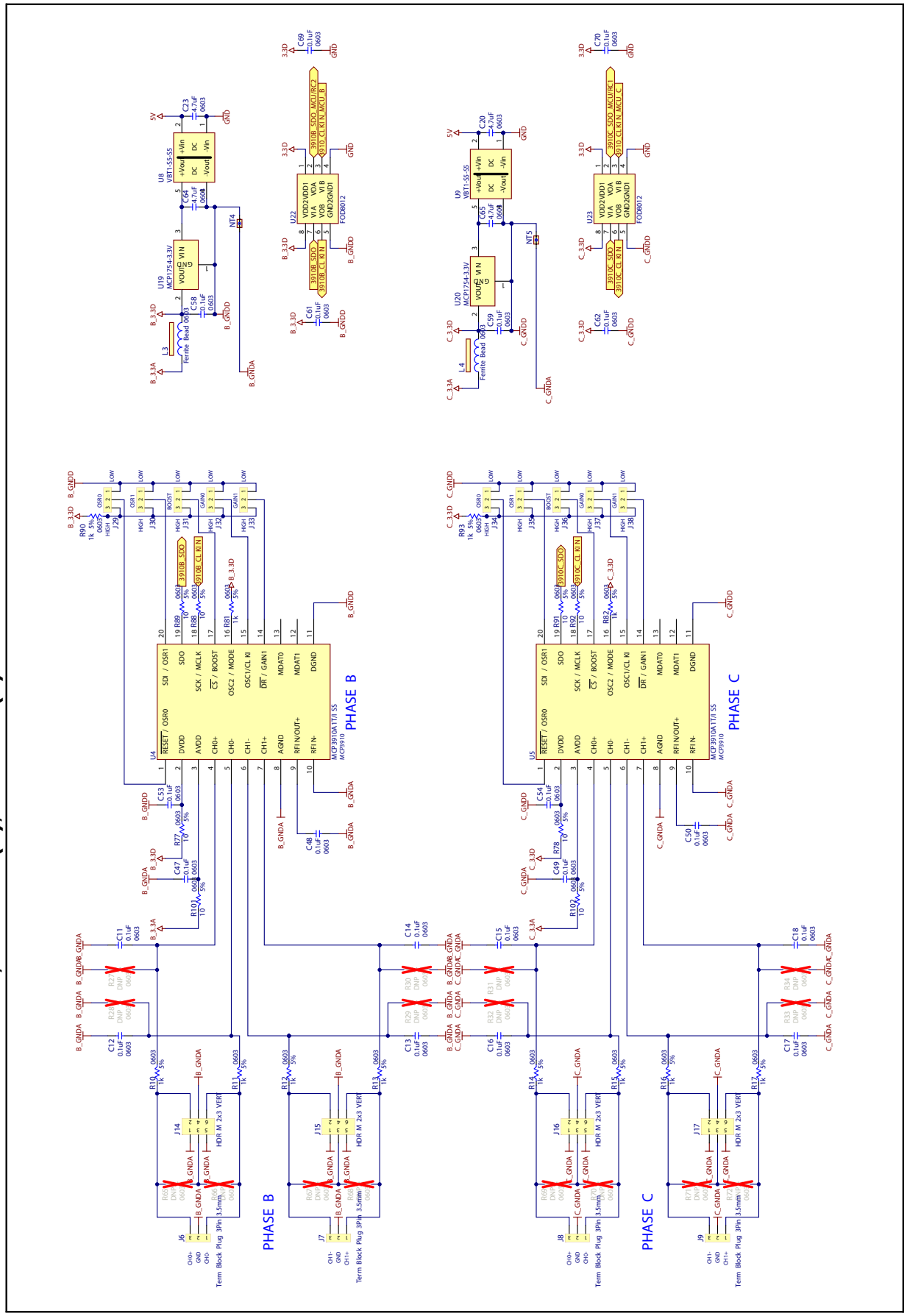

© 2014 Microchip Technology Inc.

A.4 SCHEMATIC – USB AND MEMORY

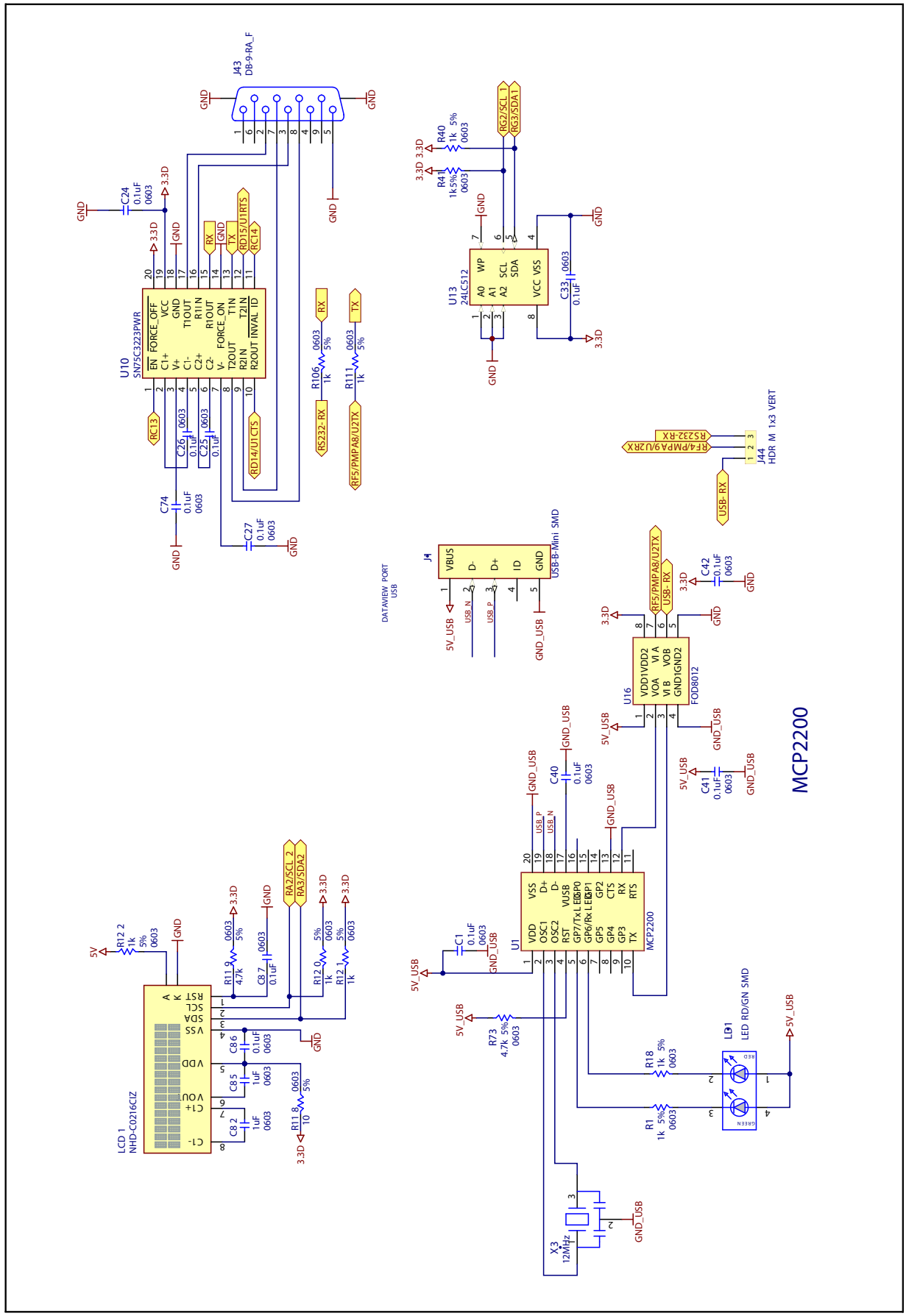

A.5 SCHEMATIC – MICROCONTROLLER (MCU)

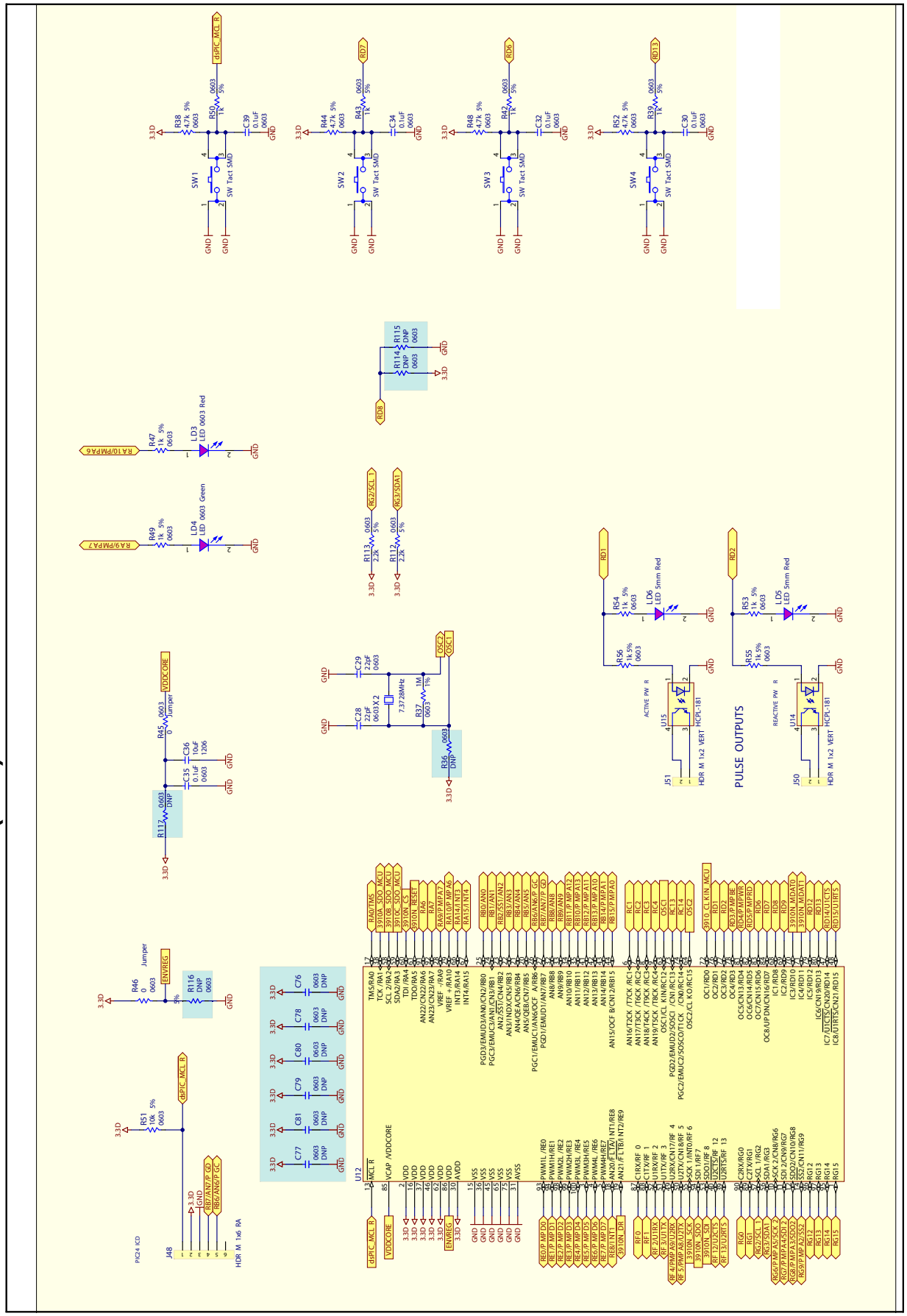

© 2014 Microchip Technology Inc.

A.6 SCHEMATIC – PIM MODULE

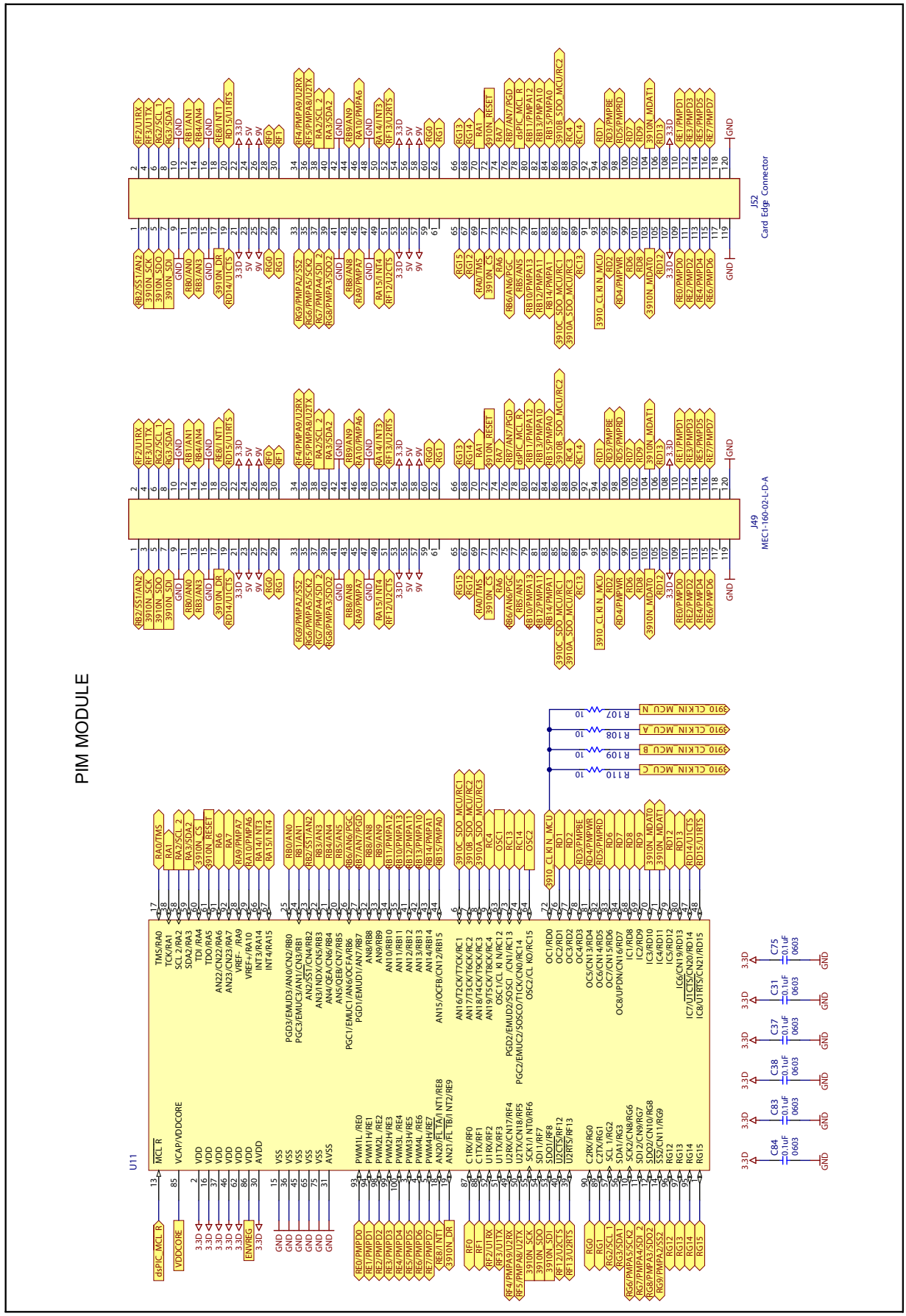

A.7 SCHEMATIC – POWER

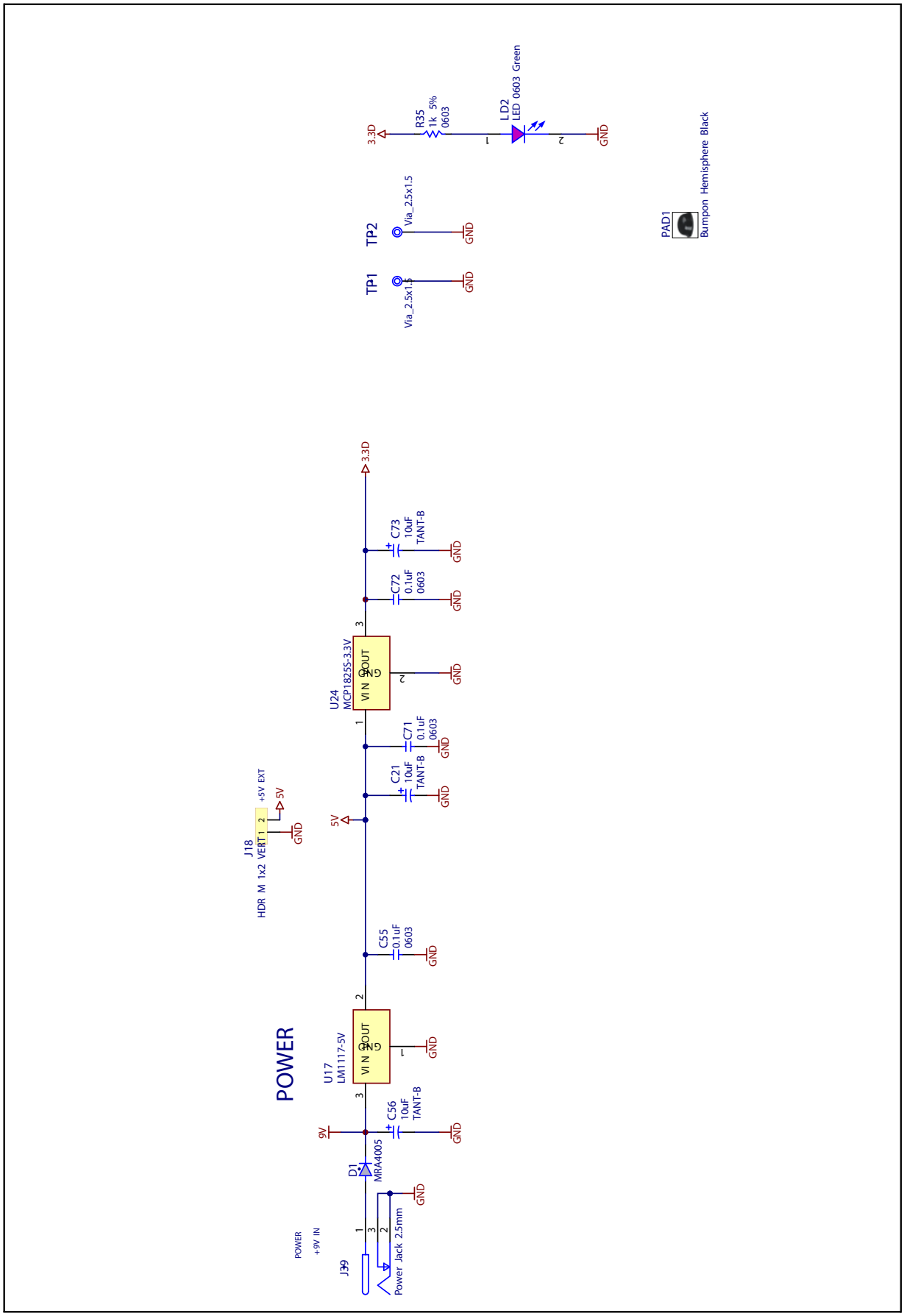

© 2014 Microchip Technology Inc.

A.8 BOARD - TOP TRACE AND TOP SILK

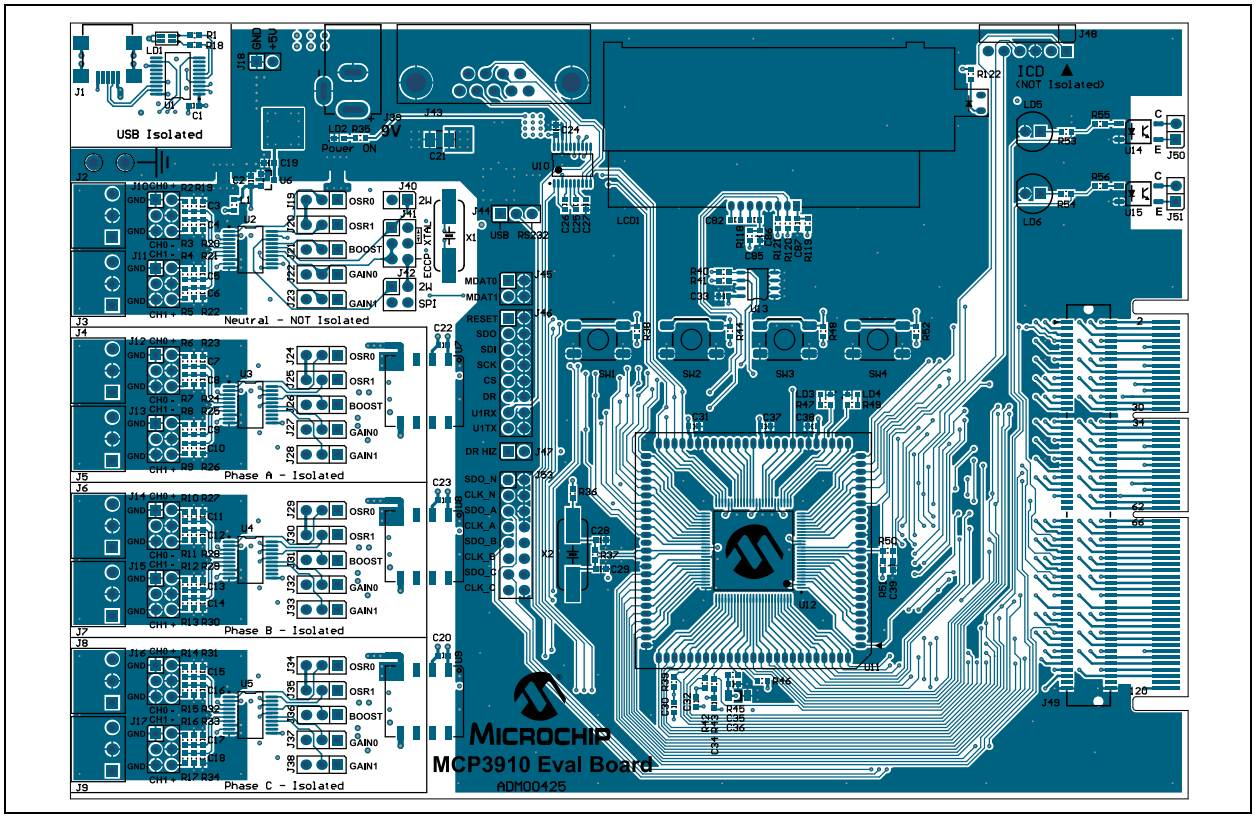

A.9 BOARD - BOTTOM TRACE AND BOTTOM SILK

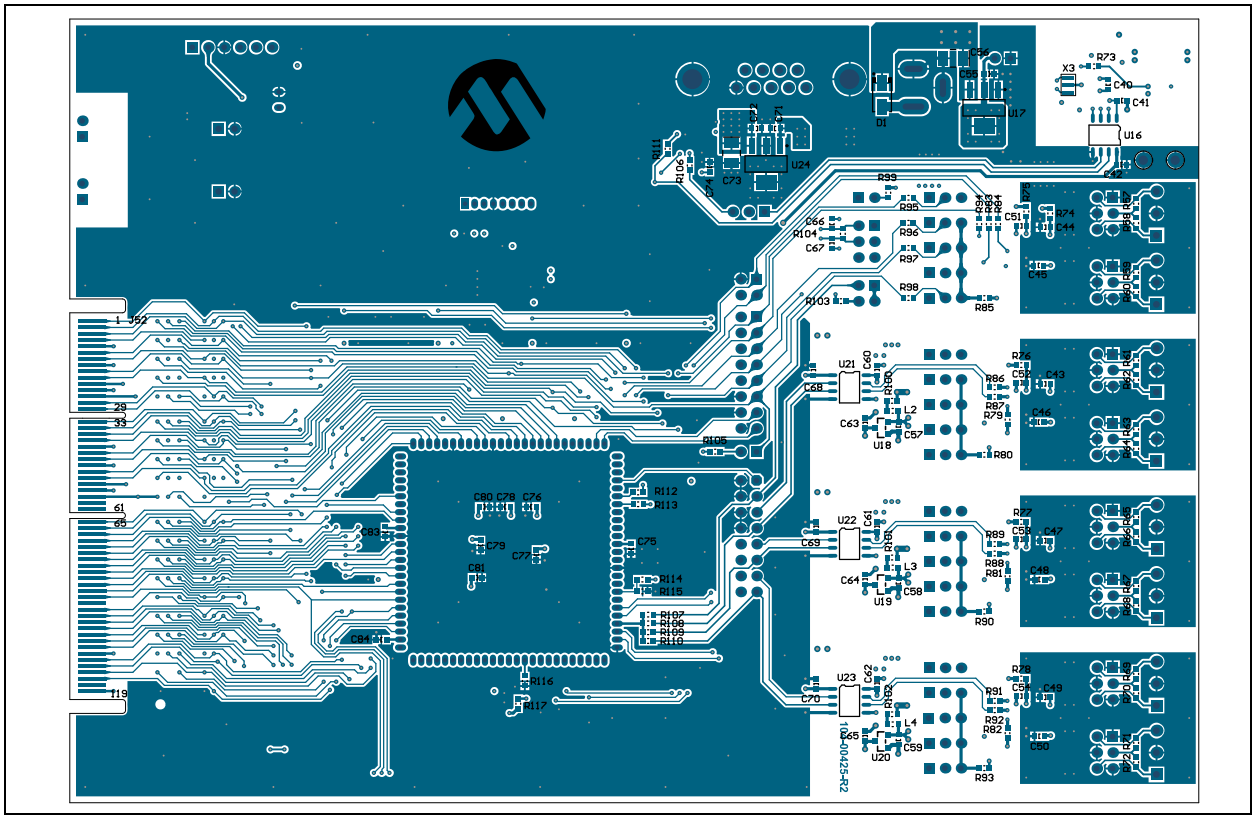

© 2014 Microchip Technology Inc.

A.10 BOARD - LAYER #2 V_{DD}

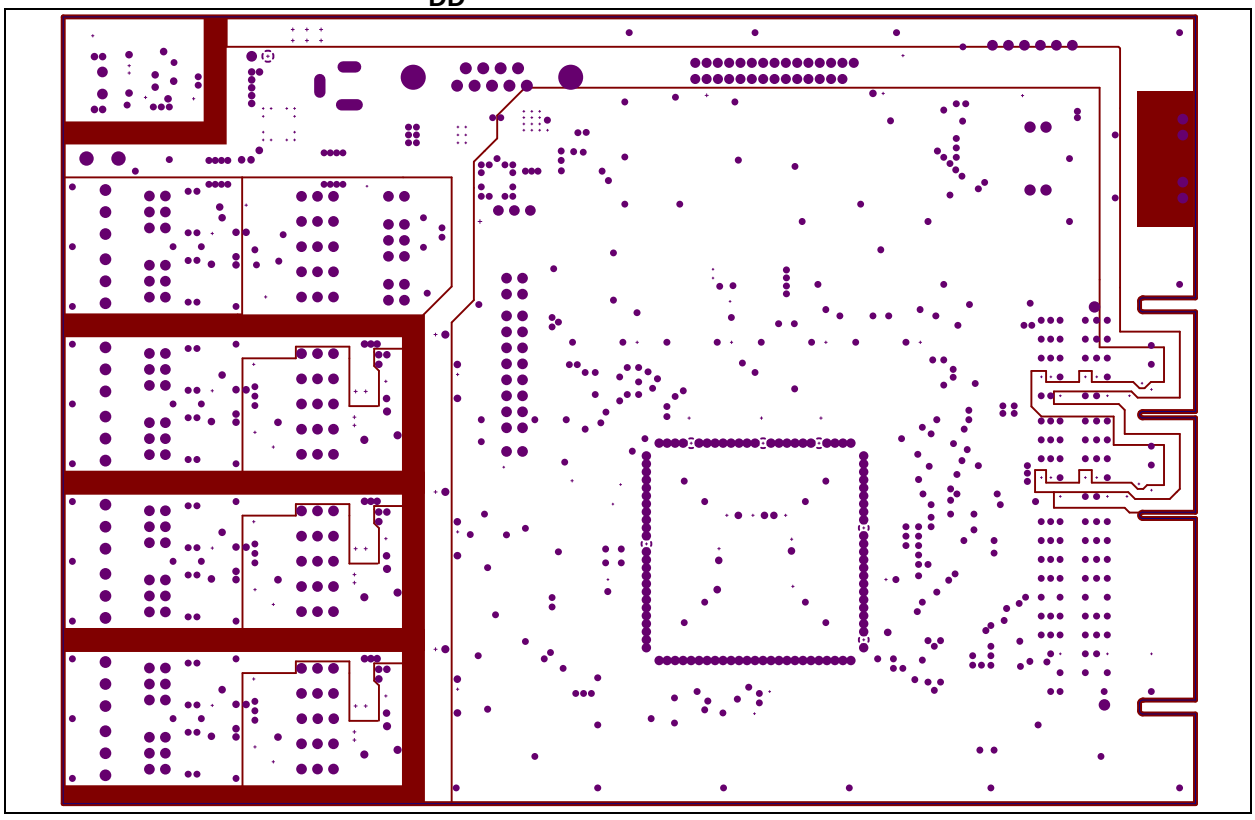

A.11 BOARD - LAYER #3 GND

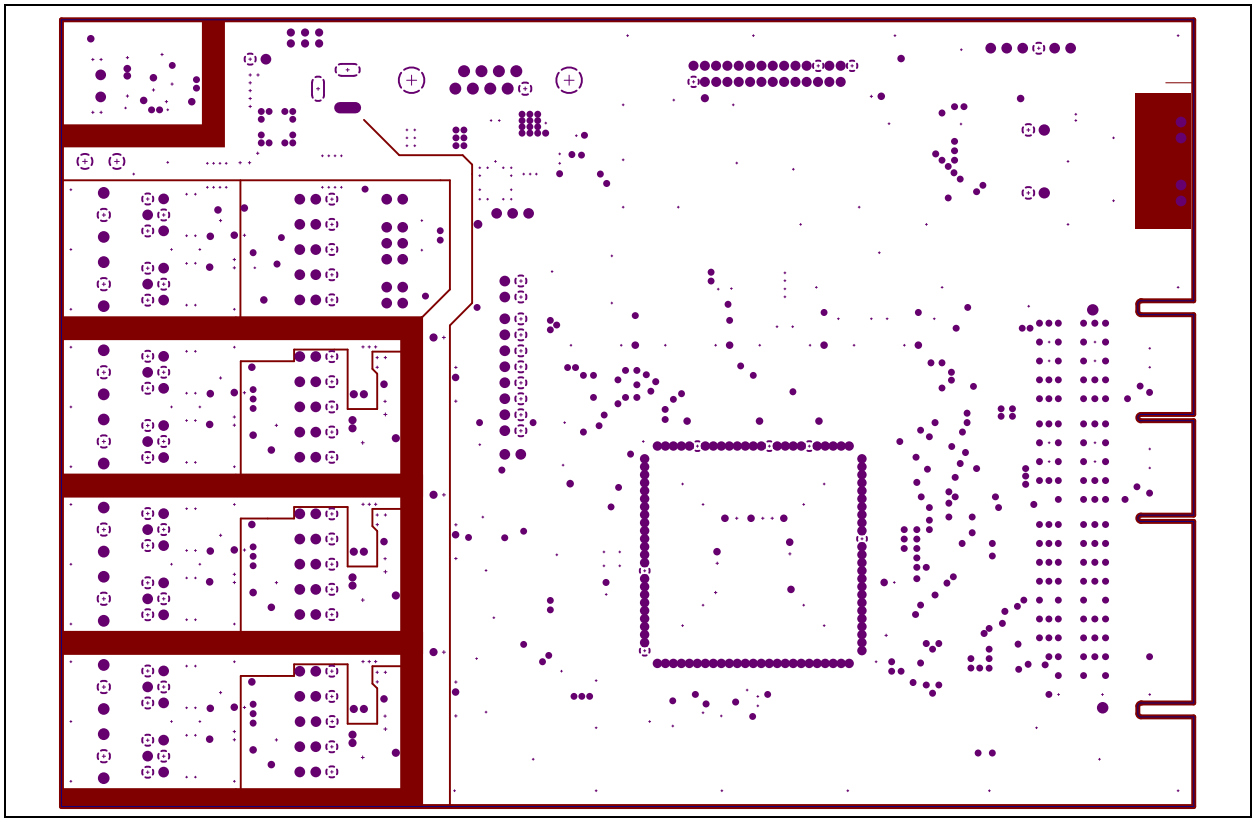

A.12 BOARD - TOP SILK AND PADS

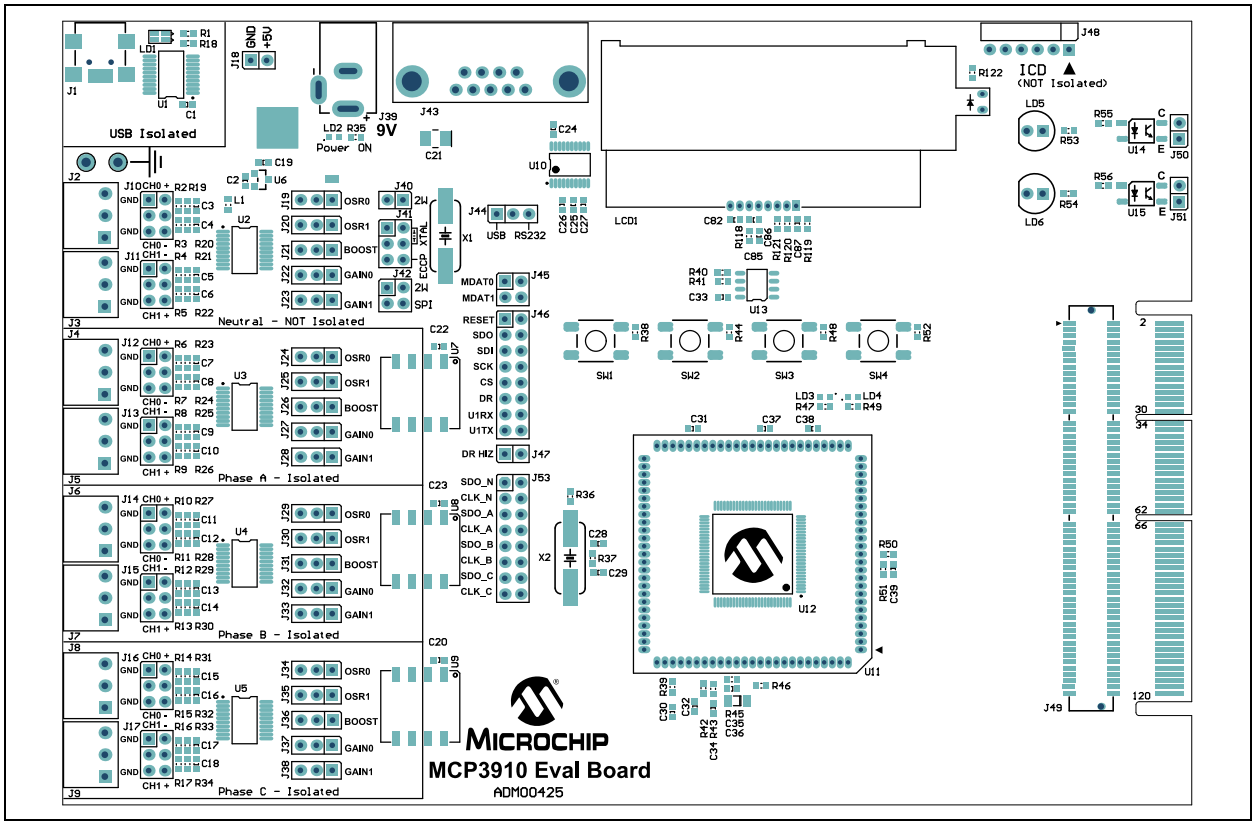

A.13 BOARD - BOTTOM SILK AND PADS

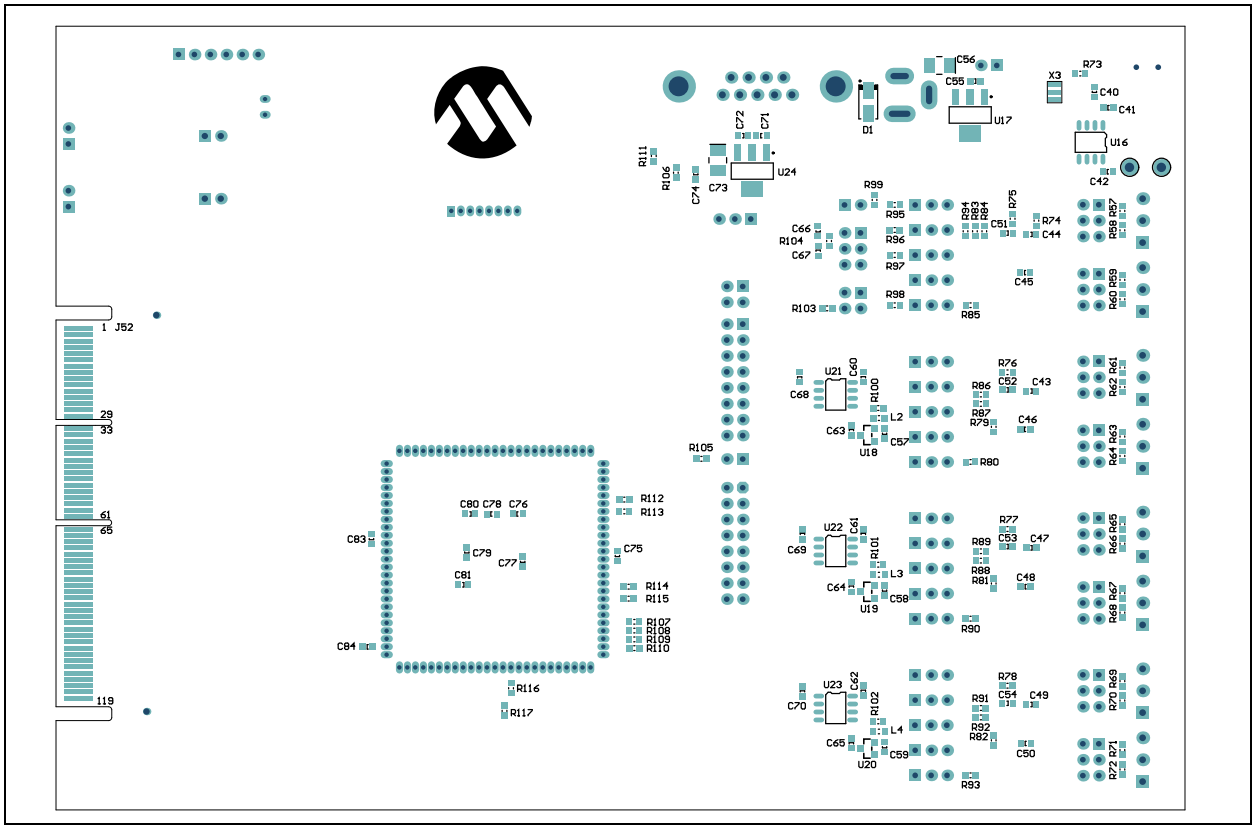

© 2014 Microchip Technology Inc.

Appendix B. Bill of Materials (BOM)

TABLE B-1: BILL OF MATERIALS (BOM)

Qty	Reference	Description	Manufacturer	Part Number
64	C1, C2, C3, C4, C5, C6, C7, C8, C9, C10, C11, C12, C13, C14, C15, C16, C17, C18, C24, C25, C26, C27, C30, C31, C32, C33, C34, C35, C37, C38, C39, C40, C41, C42, C43, C44, C45, C46, C47, C48, C49, C50, C51, C52, C53, C54, C55, C57, C58, C59, C60, C61, C62, C68, C69, C70, C71, C72, C74, C75, C82, C83, C84, C86, C87	Capacitor ceramic 0.1 µF 16V 10% X7R 0603	TDK Corporation	C1608X7R1C104K
7	C19, C20, C22, C23, C63, C64, C65	Capacitor ceramic 4.7 uF 6.3V 10% X5R 0603	TDK Corporation	C1608X5R0J475K
2	C21, C73	Cap. tantalum 10 uF 6.3V 20% 3 Ohm size B	AVX Corporation	TAJB106M006RNJ
4	C28, C29, C66, C67	Cap. ceramic 22 pF 50V 5% C0G 0603	TDK Corporation	C1608C0G1H220J
1	C36	Cap. ceramic 10 uF 10V X7R 20% 1206	TDK Corporation	C3216X7R1A106M
1	C56	Cap. tantalum 10 uF 20V 10% 2.1 Ohm size B	AVX Corporation	TAJB106K020RNJ
2	C82, C85	Cap. ceramic 1 uF 10V X7R 20% 0603	TDK Corporation	C1608X7R1A105M
1	D1	Diode std. recept. 1A 600V SMA	ON Semiconductor	MRA4005T3G
1	J1	Connector recept. mini SMD R/A 5 pos.	Hirose Electric Co., Ltd.	UX60-MB-5ST
8	J2, J3, J4, J5, J6, J7, J8, J9	Conn. terminal blocks plug 6A 3.5MM 3 pos. (mates with 8724 HDR-24 pin)	Keystone Electronics Corp.	8723
8	J2, J3, J4, J5, J6, J7, J8, J9	Pluggable terminal blocks 24 pin breakway header	Keystone Electronics Corp.	8724
9	J10, J11, J12, J13, J14, J15, J16, J17, J41	Conn. header male .100 2x3 pos. vert.	FCI	6796-206HLF
5	J18, J40, J47, J50, J51	Conn. header male .100 1x2 pos. vert.	FCI	77311-118-02LF

Note 1: The components listed in this Bill of Materials are representative of the PCB assembly. The released BOM used in manufacturing uses all RoHS-compliant components.

TABLE B-1: BILL OF MATERIALS (BOM) (CONTINUED)

Qty	Reference	Description	Manufacturer	Part Number
21	J19, J20, J21, J22, J23, J24, J25, J26, J27, J28, J29, J30, J31, J32, J33, J34, J35, J36, J37, J38, J44	Conn. header male .100 1x3 pos. vertical	FCI	68000-103HLF
1	J39	Conn. power jack male 2.5 mm CLSD	CUI Inc.	PJ-002B
2	J42, J45	Conn. header male .100 2x2 pos. vert.	Tyco Electronics	HDR M 2x2 Vertical
1	J43	Conn. D-sub. rcpt. R/A 9 pos. 15 gold	TE Connectivity	1734354-2
2	J46, J53	Conn. header male .100 2x8 pos. vert.	FCI	68602-116HLF
1	J48	Conn. header male .100 1x6 pos. RA	FCI	68016-106HLF
1	J49	Mini edge card socket 1 mm pitch vertical	Samtec, Inc.	MEC1-160-02-L-D-A
4	L1, L2, L3, L4	Ferrite chip 47 Ohms 500 mA 0603	Laird Technologies	LI0603E470R-10
1	LCD1	LCD cog. char. 2x16 transfl.	Multisight Display Co. Ltd.	NHD-C0216-CIZ-FSW-FBW-3V3
1	LD1	LED 2x1.2 mm red/green wtr. clr. SMD	Kingbright Corp.	APHBM2012SURKCGKC
2	LD2, LD4	LED Smartled green 570 nm 0603	OSRAM Opto Semiconductors	LG L29K-G2J1-24-Z
1	LD3	LED Smartled red 630 nm 0603	OSRAM Opto Semiconductors	LS L29K-G1J2-1-0-2-R18-Z
2	LD5, LD6	LED 5mm red 640 nm 20 mcd 2 mA	Kingbright Corp.	WP7113LSRD
45	R1, R2, R3, R4, R5, R6, R7, R8, R9, R10, R11, R12, R13, R14, R15, R16, R17, R18, R35, R39, R40, R41, R42, R43, R47, R49, R50, R53, R54, R55, R56, R79, R80, R81, R82, R85, R90, R93, R99, R105, R106, R111, R120, R121, R122	Res. 1k Ω 1/10W 5% 0603 SMD	Panasonic - ECG	ERJ-3GEYJ102V
2	R37, R104	Res. 1M Ω 1/10W 1% 0603 SMD	Panasonic - ECG	ERJ-3EKF1004
6	R38, R44, R48, R52, R73, R119	Res. 4.7k Ω 1/10W 5% 0603 SMD	Panasonic - ECG	ERJ-3GEYJ472V
2	R45, R46	Res. 0 Ω 1/10W 5% 0603 SMD	Panasonic - ECG	ERJ-3GEY0R00V
1	R51	Res. 10k Ω 1/10W 5% 0603 SMD	Panasonic - ECG	ERJ-3GEYJ103V
27	R74, R75, R76, R77, R78, R83, R84, R86, R87, R83, R89, R91, R92, R94, R95, R96, R97, R98, R100, R101, R102, R103, R107, R108, R109, R110, R118	Res. 10 Ω 1/10W 5% 0603 SMD	Panasonic - ECG	ERJ-3GEYJ100V
2	R112, R113	Res. 2.2k Ω 1/10W 5% 0603 SMD	Panasonic - ECG	ERJ-3GEYJ222V

Note 1: The components listed in this Bill of Materials are representative of the PCB assembly. The released BOM used in manufacturing uses all RoHS-compliant components.

TABLE B-1: BILL OF MATERIALS (BOM) (CONTINUED)

Qty	Reference	Description	Manufacturer	Part Number
4	SW1, SW2, SW3,SW4	Switch tact. 6 mm 160GF H = 4.3 mm	Omron Electronics LLC-EMC Division	B3S-1000P
3	U7, U8, U9	Converter DC/DC 5V out 1W	CUI	VBT1-S5-S5-SMT
1	U10	IC line driver/receiver RS232 20-TSSOP	Texas Instruments	SN75C3223PWR
1	U11	PIM-100-pin 25x1 header 1.27 mm on center	Oupiin America, Inc.	2212-1X25G00S/031/058B
2	U14, U15	Photocoupler trans. out 4-minipak	Avago Technologies	HCPL-181-00CE
4	U16, U21, U22, U23	Optocoupler bidirectional 3.3V 5V SOIC-8	Fairchild Semiconductor	FOD8012
1	U17	IC reg. LDO 800 mA 5V SOT-223	National Semiconductor	LM1117MPX-5.0/NOPB
1	U1	IC USB to UART SSOP-20	Microchip Technology Inc.	MCP2200-I/SS
4	U2, U3, U4, U5	IC AFE 24-Bit 2-Wire interface	Microchip Technology Inc.	MCP3910A1T-E/SS
4	U6, U18, U19, U20	IC reg. LDO 150 mA 3.3V SOT-23A-3	Microchip Technology Inc.	MCP1754ST-3302E/CB
1	U13	IC EEPROM 512K bit 400 kHz SOIC-8	Microchip Technology Inc.	24LC512-1/SN
1	U24	IC LDO Reg. 500 mA 3.3V SOT-223-3	Microchip Technology Inc.	MCP1825S-3302E/DB-N
3	U11	100-pin PIC24FJ256GA110 MCU	Microchip Technology Inc.	MA240015
1	X1	Crystal 10 MHz 18 pF SMD	Abracon Corporation	ABLS-10.000MHZ-B4-T
1	X2	Crystal 7.3728 MHz 18 pF SMD	Abracon Corporation	ABLS-7.3728MHZ-B4-T
1	X3	Cer. Resonator 12.0 MHz SMD	Murata Electronics	CSTCE12M0G55-R0

Note 1: The components listed in this Bill of Materials are representative of the PCB assembly. The released BOM used in manufacturing uses all RoHS-compliant components.

Worldwide Sales and Service

AMERICAS

Corporate Office
2355 West Chandler Blvd.
Chandler, AZ 85224-6199
Tel: 480-792-7200
Fax: 480-792-7277
Technical Support:
http://www.microchip.com/support
Web Address:
www.microchip.com

Atlanta
Duluth, GA
Tel: 678-957-9614
Fax: 678-957-1455

Austin, TX
Tel: 512-257-3370

Boston
Westborough, MA
Tel: 774-760-0087
Fax: 774-760-0088

Chicago
Itasca, IL
Tel: 630-285-0071
Fax: 630-285-0075

Cleveland
Independence, OH
Tel: 216-447-0464
Fax: 216-447-0643

Dallas
Addison, TX
Tel: 972-818-7423
Fax: 972-818-2924

Detroit
Novi, MI
Tel: 248-848-4000

Houston, TX
Tel: 281-894-5983

Indianapolis
Noblesville, IN
Tel: 317-773-8323
Fax: 317-773-5453

Los Angeles
Mission Viejo, CA
Tel: 949-462-9523
Fax: 949-462-9608

New York, NY
Tel: 631-435-6000

San Jose, CA
Tel: 408-735-9110

Canada - Toronto
Tel: 905-673-0699
Fax: 905-673-6509

ASIA/PACIFIC

Asia Pacific Office
Suites 3707-14, 37th Floor
Tower 6, The Gateway
Harbour City, Kowloon
Hong Kong
Tel: 852-2943-5100
Fax: 852-2401-3431

Australia - Sydney
Tel: 61-2-9868-6733
Fax: 61-2-9868-6755

China - Beijing
Tel: 86-10-8569-7000
Fax: 86-10-8528-2104

China - Chengdu
Tel: 86-28-8665-5511
Fax: 86-28-8665-7889

China - Chongqing
Tel: 86-23-8980-9588
Fax: 86-23-8980-9500

China - Hangzhou
Tel: 86-571-8792-8115
Fax: 86-571-8792-8116

China - Hong Kong SAR
Tel: 852-2943-5100
Fax: 852-2401-3431

China - Nanjing
Tel: 86-25-8473-2460
Fax: 86-25-8473-2470

China - Qingdao
Tel: 86-532-8502-7355
Fax: 86-532-8502-7205

China - Shanghai
Tel: 86-21-5407-5533
Fax: 86-21-5407-5066

China - Shenyang
Tel: 86-24-2334-2829
Fax: 86-24-2334-2393

China - Shenzhen
Tel: 86-755-8864-2200
Fax: 86-755-8203-1760

China - Wuhan
Tel: 86-27-5980-5300
Fax: 86-27-5980-5118

China - Xian
Tel: 86-29-8833-7252
Fax: 86-29-8833-7256

China - Xiamen
Tel: 86-592-2388138
Fax: 86-592-2388130

China - Zhuhai
Tel: 86-756-3210040
Fax: 86-756-3210049

ASIA/PACIFIC

India - Bangalore
Tel: 91-80-3090-4444
Fax: 91-80-3090-4123

India - New Delhi
Tel: 91-11-4160-8631
Fax: 91-11-4160-8632

India - Pune
Tel: 91-20-3019-1500

Japan - Osaka
Tel: 81-6-6152-7160
Fax: 81-6-6152-9310

Japan - Tokyo
Tel: 81-3-6880- 3770
Fax: 81-3-6880-3771

Korea - Daegu
Tel: 82-53-744-4301
Fax: 82-53-744-4302

Korea - Seoul
Tel: 82-2-554-7200
Fax: 82-2-558-5932 or
82-2-558-5934

Malaysia - Kuala Lumpur
Tel: 60-3-6201-9857
Fax: 60-3-6201-9859

Malaysia - Penang
Tel: 60-4-227-8870
Fax: 60-4-227-4068

Philippines - Manila
Tel: 63-2-634-9065
Fax: 63-2-634-9069

Singapore
Tel: 65-6334-8870
Fax: 65-6334-8850

Taiwan - Hsin Chu
Tel: 886-3-5778-366
Fax: 886-3-5770-955

Taiwan - Kaohsiung
Tel: 886-7-213-7830

Taiwan - Taipei
Tel: 886-2-2508-8600
Fax: 886-2-2508-0102

Thailand - Bangkok
Tel: 66-2-694-1351
Fax: 66-2-694-1350

EUROPE

Austria - Wels
Tel: 43-7242-2244-39
Fax: 43-7242-2244-393

Denmark - Copenhagen
Tel: 45-4450-2828
Fax: 45-4485-2829

France - Paris
Tel: 33-1-69-53-63-20
Fax: 33-1-69-30-90-79

Germany - Dusseldorf
Tel: 49-2129-3766400

Germany - Munich
Tel: 49-89-627-144-0
Fax: 49-89-627-144-44

Germany - Pforzheim
Tel: 49-7231-424750

Italy - Milan
Tel: 39-0331-742611
Fax: 39-0331-466781

Italy - Venice
Tel: 39-049-7625286

Netherlands - Drunen
Tel: 31-416-690399
Fax: 31-416-690340

Poland - Warsaw
Tel: 48-22-3325737

Spain - Madrid
Tel: 34-91-708-08-90
Fax: 34-91-708-08-91

Sweden - Stockholm
Tel: 46-8-5090-4654

UK - Wokingham
Tel: 44-118-921-5800
Fax: 44-118-921-5820

03/25/14

© 2014 Microchip Technology Inc.