ARF468AG
ARF468BG

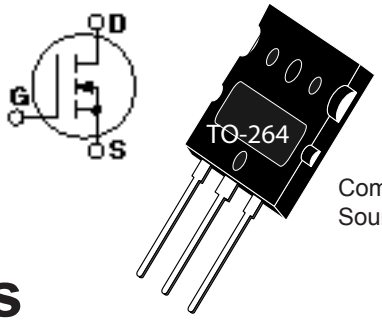

Common Source

RF POWER MOSFETs
N-CHANNEL ENHANCEMENT MODE

150V 300W 45MHz

The ARF468A and ARF468B comprise a symmetric pair of common source RF power transistors designed for push-pull scientific, commercial, medical and industrial RF power amplifier applications up to 45 MHz. They have been optimized for both linear and high efficiency classes of operation.

- **Specified 150 Volt, 40.68 MHz Characteristics:**
  - **Output Power = 300 Watts.**
  - **Gain = 15dB (Class AB)**
  - **Efficiency = 75% (Class C)**
- **Low Cost Common Source RF Package.**
- **Low Vth thermal coefficient.**
- **Low Thermal Resistance.**
- **Optimized SOA for Superior Ruggedness.**

MAXIMUM RATINGS

All Ratings: T_C = 25°C unless otherwise specified.

Symbol	Parameter	Ratings	UNIT
V_{DSS}	Drain-Source Voltage	500	Volts
V_{DGO}	Drain-Gate Voltage	500	
I_D	Continuous Drain Current @ T_C = 25°C	22	Amps
V_{GS}	Gate-Source Voltage	±30	Volts
P_D	Total Power Dissipation @ T_C = 25°C	300	Watts
$R_{\theta JC}$	Junction to Case	0.35	°C/W
T_J,T_{STG}	Operating and Storage Junction Temperature Range	-55 to 150	°C
T_L	Lead Temperature: 0.063" from Case for 10 Sec.	300	

STATIC ELECTRICAL CHARACTERISTICS

Symbol	Characteristic / Test Conditions	MIN	TYP	MAX	UNIT
BV_{DSS}	Drain-Source Breakdown Voltage (V_{GS} = 0V, I_D = 250 µA)	500			Volts
$R_{DS(ON)}$	Drain-Source On-State Resistance ① (V_{GS} = 10V, I_D = 11A)			0.3	ohms
I_{DSS}	Zero Gate Voltage Drain Current (V_{DS} = 500V, V_{GS} = 0V)			25	µA
	Zero Gate Voltage Drain Current (V_{DS} = 400V, V_{GS} = 0V, T_C = 125°C)			250	
I_{GSS}	Gate-Source Leakage Current (V_{GS} = ±30V, V_{DS} = 0V)			±100	nA
g_{fs}	Forward Transconductance (V_{DS} = 25V, I_D = 11A)	5	8	9	mhos
$V_{GS}(TH)$	Gate Threshold Voltage (V_{DS} = V_{GS}, I_D = 1mA)	2.5	4	5	Volts

CAUTION: These Devices are Sensitive to Electrostatic Discharge. Proper Handling Procedures Should Be Followed.

DYNAMIC CHARACTERISTICS

Symbol	Characteristic	Test Conditions	MIN	TYP	MAX	UNIT
C_{iss}	Input Capacitance	V_{GS} = 0V V_{DS} = 150V f = 1 MHz		2230		
C_{oss}	Output Capacitance			230		pF
C_{rss}	Reverse Transfer Capacitance			105		

FUNCTIONAL CHARACTERISTICS

Symbol	Characteristic	Test Conditions	MIN	TYP	MAX	UNIT
G_{PS}	Common Source Amplifier Power Gain	f = 40.68 MHz	14	15		dB
η	Drain Efficiency	V_{GS} = 2.5V V_{DD} = 150V	70	75		%
Ψ	Electrical Ruggedness VSWR 10:1	P_{out} = 300W	No Degradation in Output Power			

① Pulse Test: Pulse width < 380μS, Duty Cycle < 2%

Microsemi Reserves the right to change, without notice, the specifications and information contained herein.

TYPICAL PERFORMANCE CURVES

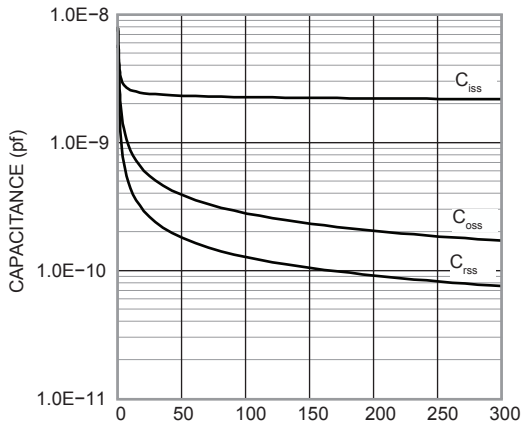

Figure 1, Typical Capacitance vs. Drain-to-Source Voltage

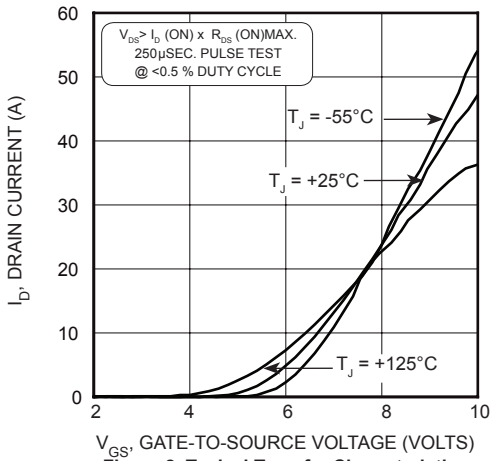

Figure 2, Typical Transfer Characteristics

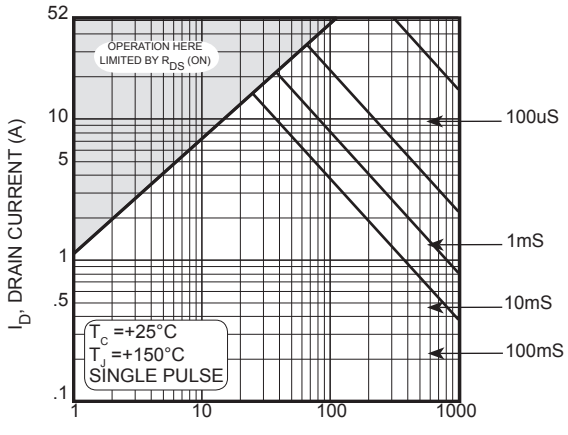

Figure 3, Typical Maximum Safe Operating Area

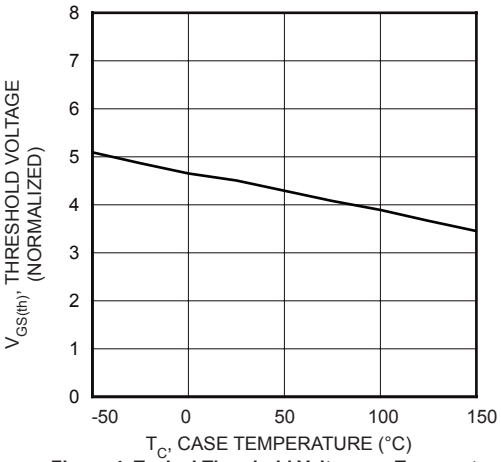

Figure 4, Typical Threshold Voltage vs Temperature

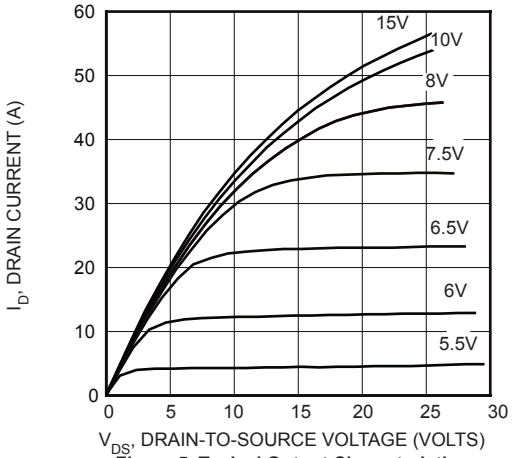

Figure 5, Typical Output Characteristics

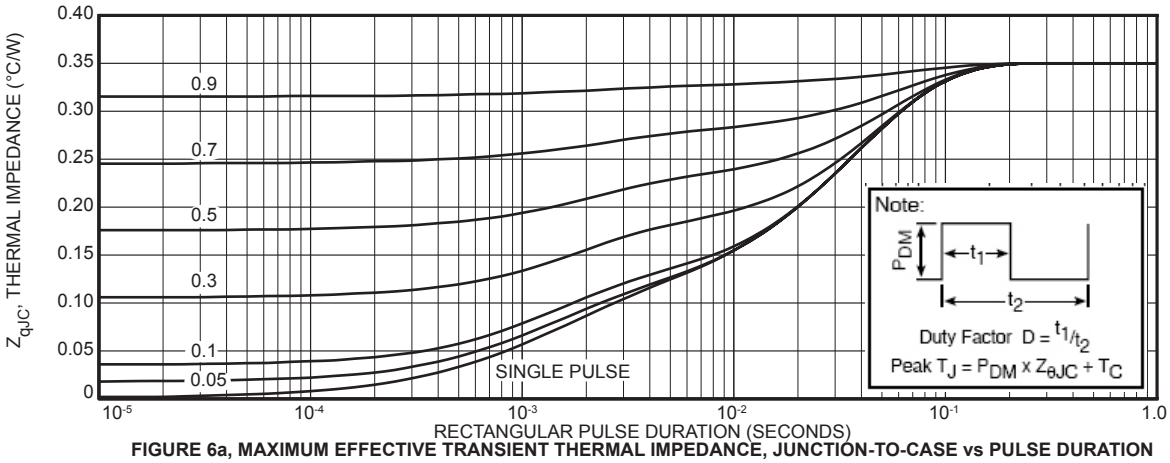

FIGURE 6a, MAXIMUM EFFECTIVE TRANSIENT THERMAL IMPEDANCE, JUNCTION-TO-CASE vs PULSE DURATION

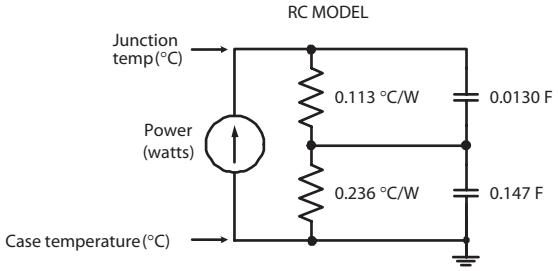

Figure 6b, TRANSIENT THERMAL IMPEDANCE

Table 1 - Typical Class AB Large Signal Input - Output Impedance

Freq. (MHz)	Z_{in} (Ω)	Z_{OL} (Ω)
2.0	18 - j 10.5	21 - j 1.4
13.5	2.7 - j 4.6	17.5 - j 7.8
27.1	1.8 - j 1.6	11.7 - j 10.4
40.7	1.7 - j 0.2	7.7 - j 10

Z_{IN} - Gate shunted with 25Ω I_{dq} = 0
Z_{OL} - Conjugate of optimum load for 300 Watts output at V_{dd}=125V

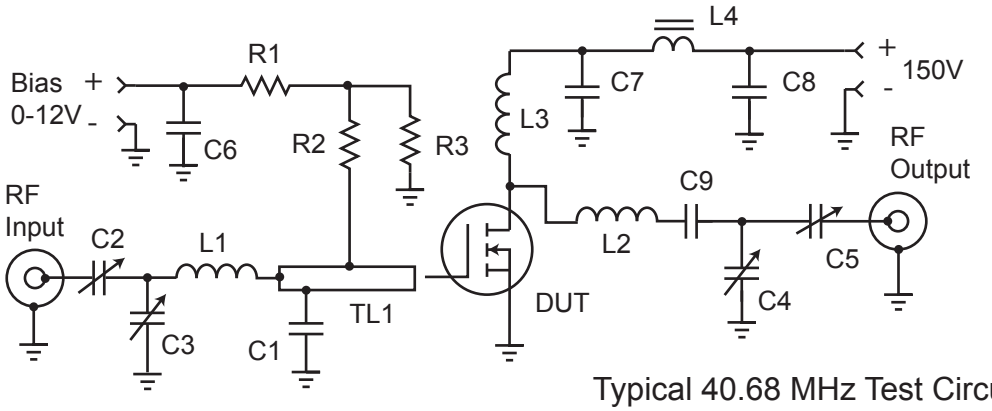

Typical 40.68 MHz Test Circuit

C1 -- 2200pF ATC 700B
C2-C5 -- Arco 465 Mica trimmer
C6-C8 -- .1 µF 500V ceramic chip
C9 -- 3x 2200 pF 500V chips COG

L1 -- 4t #22 AWG .25"ID .25 "L ~87nH
L2 -- 5t #16 AWG .312" ID .35"L ~176nH
L3 -- 10t #24 AWG .25"ID ~.5µH
L4 -- VK200-4B ferrite choke 3µH

R1- R3 -- 1kΩ 0.5Ω Carbon
TL1 -- 34Ω t-line 0.175” x 1”
C1 .45" from gate pin.
PCB -- 0.062” FR4, Er=4.7

TO-264 (L) Package Outline

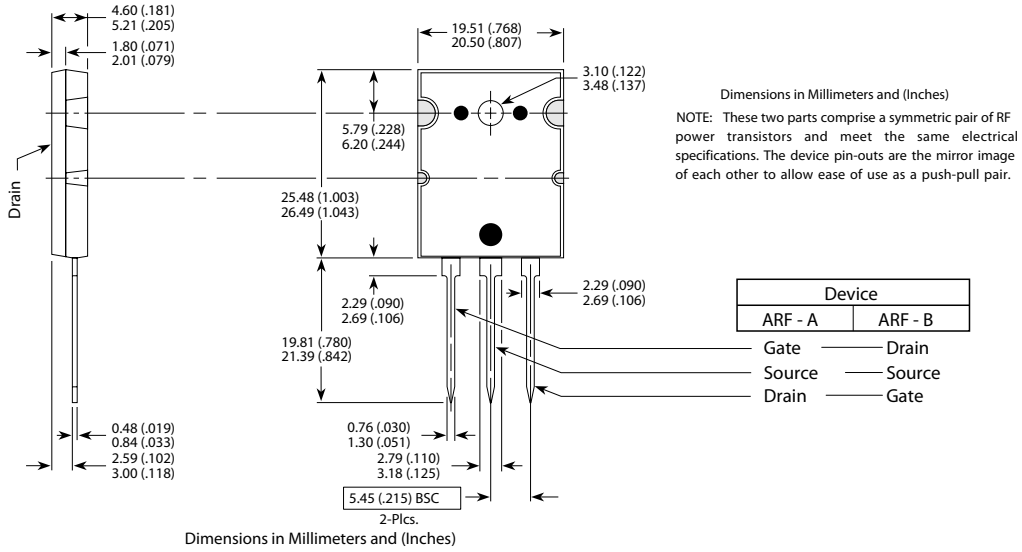

Dimensions in Millimeters and (Inches)

NOTE: These two parts comprise a symmetric pair of RF power transistors and meet the same electrical specifications. The device pin-outs are the mirror image of each other to allow ease of use as a push-pull pair.

Device	
ARF - A	ARF - B
Gate	Drain
Source	Source
Drain	Gate

Dimensions in Millimeters and (Inches)

Disclaimer:

The information contained in the document (unless it is publicly available on the Web without access restrictions) is PROPRIETARY AND CONFIDENTIAL information of Microsemi and cannot be copied, published, uploaded, posted, transmitted, distributed or disclosed or used without the express duly signed written consent of Microsemi. If the recipient of this document has entered into a disclosure agreement with Microsemi, then the terms of such Agreement will also apply . This document and the information contained herein may not be modified, by any person other than authorized personnel of Microsemi. No license under any patent, copyright, trade secret or other intellectual property right is granted to or conferred upon you by disclosure or delivery of the information, either expressly, by implication, inducement, estoppels or otherwise. Any license under such intellectual property rights must be approved by Microsemi in writing signed by an officer of Microsemi.

Microsemi reserves the right to change the configuration, functionality and performance of its products at anytime without any notice. This product has been subject to limited testing and should not be used in conjunction with life-support or other mission-critical equipment or applications. Microsemi assumes no liability whatsoever, and Microsemi disclaims any express or implied warranty, relating to sale and/or use of Microsemi products including liability or warranties relating to fitness for a particular purpose, merchantability, or infringement of any patent, copyright or other intellectual property right. Any performance specifications believed to be reliable but are not verified and customer or user must conduct and complete all performance and other testing of this product as well as any user or customers final application. User or customer shall not rely on any data and performance specifications or parameters provided by Microsemi. It is the customer's and user's responsibility to independently determine suitability of any Microsemi product and to test and verify the same. The information contained herein is provided "AS IS, WHERE IS" and with all faults, and the entire risk associated with such information is entirely with the User. Microsemi specifically disclaims any liability of any kind including for consequential, incidental and punitive damages as well as lost profit. The product is subject to other terms and conditions which can be located on the web at http://www.microsemi.com/terms-a-conditions.

050-4982 Rev A 7-2014