Atmel ATA6870

Li-Ion, NiMH Battery Measuring, Charge Balancing and Power-supply Circuit

DATASHEET

Features

- 12-bit battery-cell voltage measurement
- Simultaneous battery cells measurement in parallel
- Cell temperature measurement
- Charge Balancing Capability
  - Parallel balancing of cells possible
- Integrated power supply for MCU
- Undervoltage detection
- Less than 10µA standby current
- Low cell imbalance current (< 10µA)
- Hot plug-in capable
- Interrupt timer for cycling MCU wake-ups
- Cost-efficient solution due to cost-optimized 30V CMOS technology
- Reliable communication between stacked ICs due to level shifters with current sources and checksum monitoring of data
- Daisy-chainable
  - Each IC monitors up to 6 battery cells
  - 16 ICs (96 cells) per string
  - No limit on number of strings
- Package QFN48 7mm ×7mm

Applications

- Battery measurement, supply and monitoring IC for Li-ion and NiMH battery systems in Electric (EV) and Hybrid Electrical (HEV) Vehicles

Benefits

- Highest safety level for Li-ion battery systems in combination with Atmel® ATA6871
- Cost reduction due to integrated measurement circuit and high voltage power-supply

1. Description

The Atmel® ATA6870 is a measurement and monitoring circuit designed for Li-ion and NiMH multicell battery stacks in hybrid electrical vehicles.

The Atmel ATA6870 monitors the battery-cell voltage and the battery-cell temperature with a 12-bit ADC.

The circuit also provides charge-balancing capability for each battery-cell.

In addition, a linear regulator is integrated to supply a microcontroller or other external components. Reliable communication between stacked ICs is achieved by level-shifters with current sources. The Atmel ATA6870 can be connected to three, four, five or six battery-cells. Up to 16 circuits (96 cells) can be cascaded in one string. The number of strings is not limited.

2. Block Diagram

Figure 2-1. Block Diagram

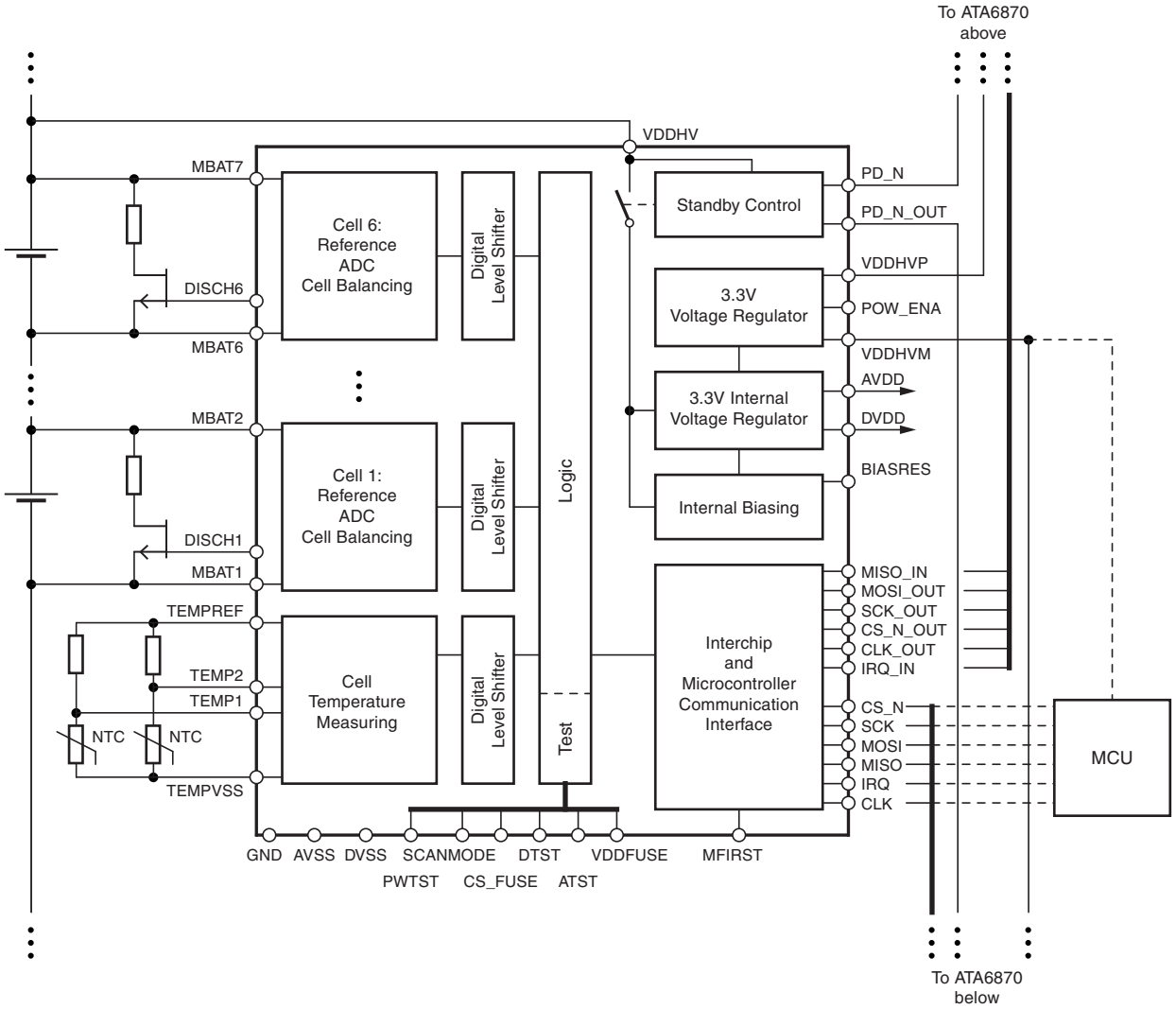

3. Pin Configuration

Figure 3-1. Pinning QFN48, 7 mm ×7 mm

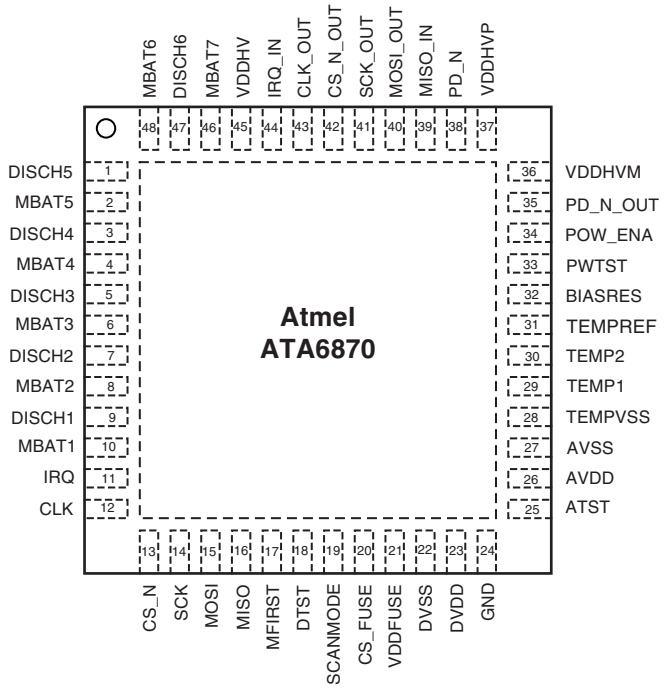

Table 3-1. Pin Description

Pad Number	Pad Name	Function	Remark
Exposed Pad		Heatslug	
1	DISCH5	Output to drive external cell-balancing transistor	
2	MBAT5	Battery cell sensing line	
3	DISCH4	Output to drive external cell-balancing transistor	
4	MBAT4	Battery cell sensing line	
5	DISCH3	Output to drive external cell-balancing transistor	
6	MBAT3	Battery cell sensing line	
7	DISCH2	Output to drive external cell-balancing transistor	
8	MBAT2	Battery cell sensing line	
9	DISCH1	Output to drive external cell-balancing transistor	
10	MBAT1	Battery cell sensing line	
11	IRQ	Interrupt output for MCU/ATA6870 below	
12	CLK	System clock	
13	CS_N	Chip select input from MCU/ATA6870 below	
14	SCK	SPI clock input from MCU/ATA6870 below	
15	MOSI	Master Out Slave In input from MCU	SPI data input
16	MISO	Master In Slave Out output for MCU	SPI data output

Table 3-1. Pin Description (Continued)

Pad Number	Pad Name	Function	Remark
17	MFIRST	Select Master/Slave	
18	DTST	Test-mode pin	Keep pin open (output)
19	SCANMODE	Test-mode pin	Connected to VSSA
20	CS_FUSE	Test-mode pin	Connected to VSSA
21	VDDFUSE	Test-mode pin	Connected to VSSA
22	DVSS	Digital negative supply	
23	DVDD	Digital positive supply input (3.3V)	Connected to AVDD
24	GND	Ground	
25	ATST	Test-mode pin	Keep pin open (output)
26	AVDD	3.3V Regulator output	
27	AVSS	Analog negative supply	
28	TEMPVSS	Ground for temperature measuring	
29	TEMP1	Temperature measuring input 1	
30	TEMP2	Temperature measuring input 2	
31	TEMPREF	Reference voltage for temperature measuring	
32	BIASRES	Internal supply current adjustment	
33	PWTST	Test - mode pin	Keep pin open (output)
34	POW_ENA	Power regulator enable/disable	
35	PD_N_OUT	Power down output	
36	VDDHVM	Power regulator output to supply e.g. an external microcontroller	
37	VDDHVP	Power regulator supply voltage	
38	PD_N	Power down input	
39	MISO_IN	Master In Slave Out input from ATA6870 above	
40	MOSI_OUT	Master Out Slave In output for ATA6870 above	
41	SCK_OUT	SPI clock output for input of ATA6870 above	
42	CS_N_OUT	Chip select output for input of ATA6870 above	
43	CLK_OUT	System clock output for input of ATA6870 above	
44	IRQ_IN	Interrupt input from ATA6870 above	
45	VDDHV	Supply voltage	
46	MBAT7	Battery cell sensing line	
47	DISCH6	Output to drive external cell-balancing transistor	
48	MBAT6	Battery cell sensing line	

4. ATA6870 System Overview

The Atmel® ATA6870 can be stacked up to 16 times in one string. The communication with MCU is carried out on the lowest level through an SPI bus. The data on the SPI bus is transmitted to the 15 other Atmel ATA6870s using the communication interface implemented inside Atmel ATA6870.

Figure 4-1. Battery Management Architecture with One Battery String

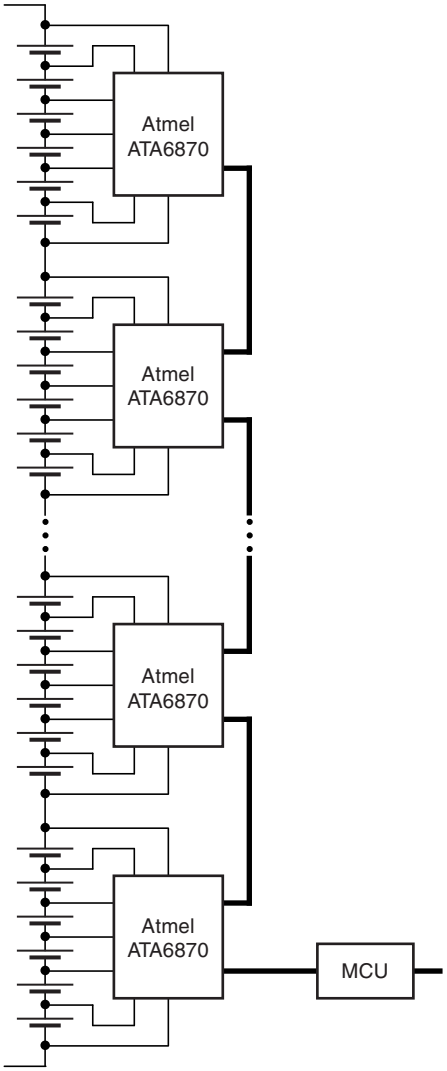

Figure 4-2. Battery Management Architecture with Several Battery Strings

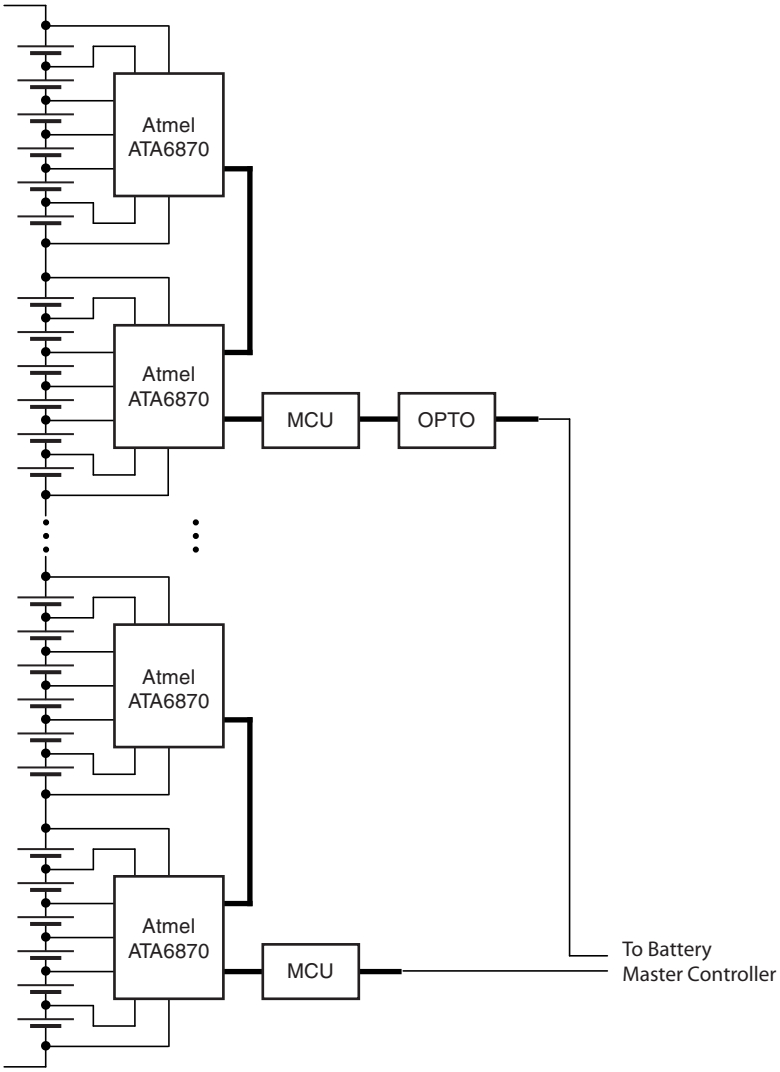

5. Absolute Maximum Ratings

Stresses beyond those listed under “Absolute Maximum Ratings” may cause permanent damage to the device. This is a stress rating only and functional operation of the device at these or any other conditions beyond those indicated in the operational sections of this specification is not implied. Exposure to absolute maximum rating conditions for extended periods may affect device reliability.

Unless otherwise specified all voltages to pin VSSA.

Parameters	Pin	Symbol	Min.	Max.	Unit
Ambient temperature		T_A	–40	+85	°C
Junction temperature		T_J	–40	+125	°C
Storage temperature		T_S	–55	+150	°C
Battery cell voltage	MBAT(i+1), MBAT(i)	$V_{MBAT(i+1)}$ - $V_{MBAT(i)}$	–0.3	+5.5	V
V_{VDDHV} - V_{VMBAT7}max		V_{VDDHV} - V_{VMBAT7}	–5.5	+0.3	V
V_{MBAT1}	MBAT1	V_{MBAT1}	–0.3	+0.3	V
Supply voltage power regulator	VDDHVP	V_{VDDHVP}	–0.3	+33.6	V
Operating supply voltage	VDDHV	V_{VDDHV}	–0.3	+30	V
Supply voltage DVDD (regulator is Off)	DVDD	V_{DVDD}	–0.3	+5.5	V
Supply voltage AVDD (regulator is Off)	AVDD	V_{AVDD}	–0.3	+5.5	V
Test-input	VDDFUSE	$V_{VDDFUSE}$	–0.3	+5.5	V
Reference voltage for temperature measuring (regulator is Off)	TEMPREF	$V_{TEMPREF}$	–0.3	VDD+0.3	V
Supply voltage VDDHVM (regulator is Off)	VDDHVM	V_{VDDHVM}	–0.3	+5.5	V
Digital Ground	DVSS	V_{AVSS} - V_{GND}	–0.3	+0.3	V
Analog Ground	AVSS	V_{AVSS} - V_{GND}	–0.3	+0.3	V
Digital/Analog Ground	AVSS, DVSS	V_{AVSS} - V_{DVSS}	–0.3	+0.3	V
Ground voltage for temperature measuring	TEMPVSS	$V_{TEMPVSS}$	–0.3	+0.3	V
Input voltage for logic I/O pins	CLK, CS_N, SCK, MOSI, DTST, ATST, SCANMODE, MFIRST, POW_ENA, CS_FUSE, PWTST	V_{CLK}, V_{CS_N}, V_{SCK}, V_{MOSI}, V_{DTST}, V_{ATST}, $V_{SCANMODE}$, V_{MFIRST}, V_{POW_ENA}, V_{CS_FUSE}, V_{PWTST}	–0.3	VDD + 0.3	V
	IRQ, MISO	V_{IRQ}, V_{MISO}	–0.3	+5.5	V
Input voltage for analog I/O pins	TEMP1, TEMP2, BIASRES	V_{TEMP1}, V_{TEMP2}, $V_{BIASRES}$	–0.3	VDD + 0.3	V
Input voltage for digital high voltage input pins	MISO_IN, IRQ_IN	V_{MISO_IN}, V_{IRQ_IN}	VDDHV – 0.3	VDDHV + 0.3	V
Voltage at digital high voltage output pins	MOSI_OUT, SCK_OUT, CS_N_OUT, CLK_OUT	V_{MOSI_OUT}, V_{SCK_OUT}, $V_{CS_N_OUT}$, V_{CLK_OUT}	VDDHV – 0.3	VDDHV + 0.3	V
Input: PD_N	PD_N	V_{PD_N}	VDDHV – 5.5	VDDHV + 0.3	V
Output: PD_N_OUT	PD_N_OUT	$V_{PD_N_OUT}$	–5.5	+0.3	V
Voltage at cell balancing outputs	DISCH(i)	VDISCH(i)	$V_{MBAT(i)}$ – 0.3	$V_{MBAT(i+1)}$ + 0.3	V

5. Absolute Maximum Ratings (Continued)

Stresses beyond those listed under “Absolute Maximum Ratings” may cause permanent damage to the device. This is a stress rating only and functional operation of the device at these or any other conditions beyond those indicated in the operational sections of this specification is not implied. Exposure to absolute maximum rating conditions for extended periods may affect device reliability.

Unless otherwise specified all voltages to pin VSSA.

Parameters	Pin	Symbol	Min.	Max.	Unit
HBM ESD ANSI/ESD-STM5.1 JESD22-A114 AEC-Q100 (002)		ESD	±2		kV
CDM ESD STM 5.3.1			500		V
	1, 12, 13, 24, 25, 36, 37, 48		750		V
Latch-up acc. to AECQ100-004, JESD78A		LATCH-UP	±100		mA

6. Thermal Resistance

Parameters	Symbol	Value	Unit
Package. QFN48 7×7			
Max. thermal resistance junction-ambient(1)	R_{thja}max	20	K/W
Max. thermal resistance junction-case	R_{thjC}max	TBD	K/W

Note: 1. Package mounted on 4 large PCB (per JESD51-7) under natural convention as defined in JESD51-2.

7. Circuit Description and Electrical Characteristics

Unless otherwise specified all parameters in this section are valid for a supply voltage range of 6.9V < V_{DDHV} < 30V and a battery cell voltage of $V_{MBAT(i+1)} - V_{MBAT(i)}$ = 0V to 5V, –40°C < T_A < 85°C. All values refer to pin VSSA, unless otherwise specified.

7.1 Operating Modes

The Atmel® ATA6870 has two operation modes.

1. Power-down Mode (PDmode)
2. Normal Mode (NORM Mode)

7.1.1 Power-down Mode

In Power-down Mode all blocks of the IC are switched off.

The circuit can be switched from Power-down to ON Mode or back via the PD_N input. If the pin is connected to VDDHV via an external optocoupler, for example, the circuit is in ON Mode. If several Atmel ATA6870 are stacked, the power-down signal must be only provided for the IC on the top level of the stack. The next lower IC receives this information from the PD_N_OUT output of its upper IC. The PD_N_OUT pin must be connected to either the PD_N pin of the next lower Atmel ATA6870 or to VSSA.

Figure 7-1. Power-down

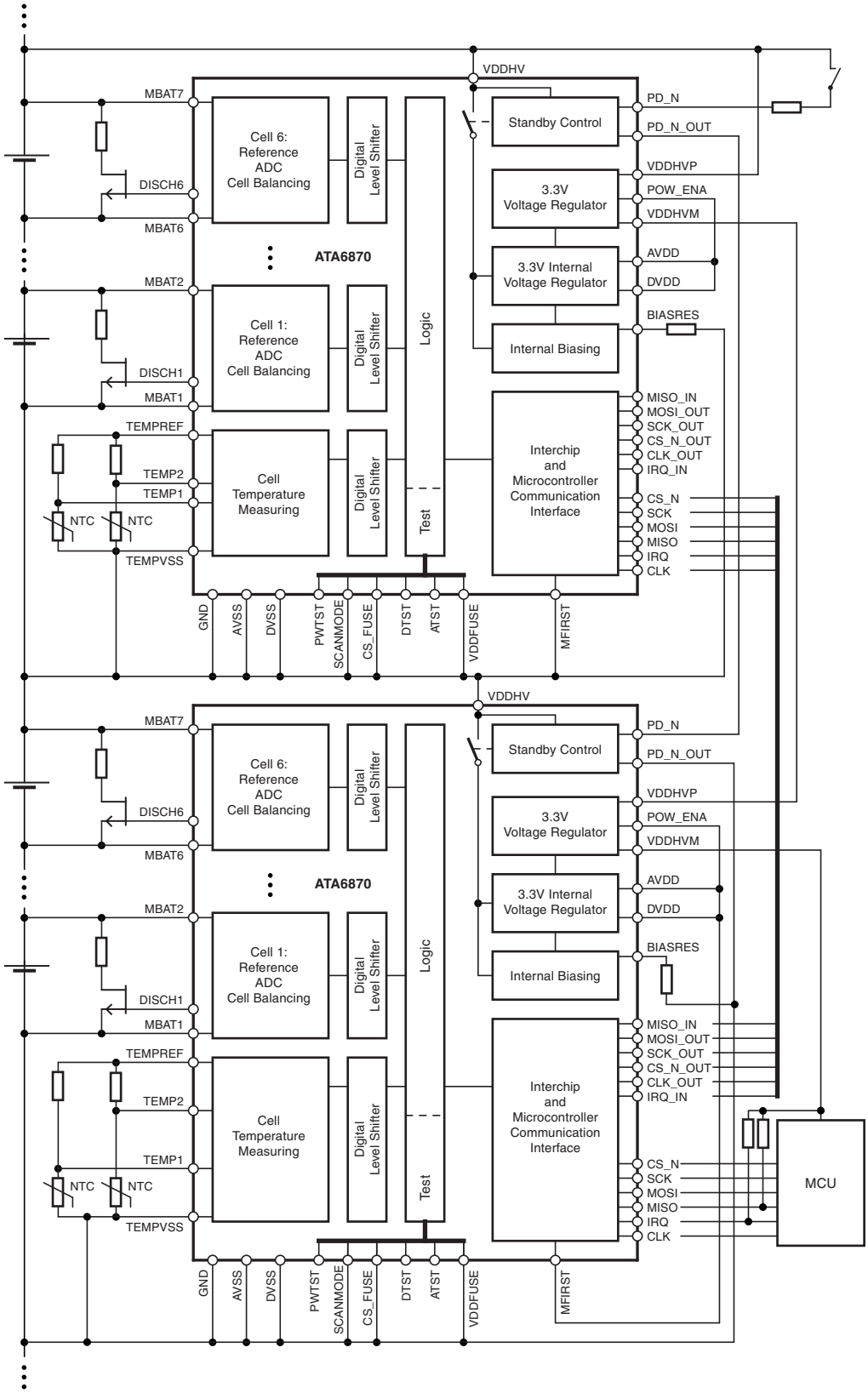

Table 7-1. Electrical Characteristics

No.	Parameters	Test Conditions	Pin	Symbol	Min.	Typ.	Max.	Unit	Type*
1.1	Maximum allowed input current in Power-down Mode (e.g., leakage current of an optocoupler)		PD_N	I_{PD_N}			50	µA	A
1.2	Input current in ON Mode		PD_N	I_{PD_N}	2.5		5	mA	A
1.3	Maximum voltage (pin PD_N left open)	I_{PD_N} = 0 to 50µA	PD_N	V_{VDDHV} - V_{PD_N}			5	V	A
1.4	Propagation delay time from Power-down Mode to NORM Mode	min slope $I_{PD_N} = \frac{1\ mA}{msec}$	DVDD	t_{VDDON}			3	ms	A
1.5	Propagation delay time from NORM Mode to Power-down Mode		DVDD	t_{VDDOFF}			10	ms	A

*) Type means: A = 100% tested, B = 100% correlation tested, C = Characterized on samples, D = Design parameter

7.1.2 Normal Operating Mode (NORM Mode)

The Atmel® ATA6870 turns on when the PD_N signal is switched from low to high. The power supplies AVDD and DVDD as well as VDDHVM (if the input signal POW_ENA = high) are turned on. The configuration registers are set to their default values. In NORM Mode the Atmel ATA6870 can acquire analog data (voltage or temperature channels) upon request from the host microcontroller. When the host microcontroller orders an acquisition through the SPI bus, the IC starts digitizing all voltage and one temperature channel in parallel. The on-chip digital signal processor filters, in real time, the channel samples. When conversion and filtering are done, the data-ready interrupt to the host processor indicates the data availability. The MCU can now read the ADC result registers. The MCU reads the Atmel ATA6870's status registers to check each IC and to acknowledge the interrupt. When Atmel ATA6870 is in NORM Mode, the MCU can be active or in idle mode. In order to wake-up the MCU by an interrupt, the Low Frequency Timer (LFT) can be activated in Atmel ATA6870. Interrupt is signaled with a high level on IRQ pin. The LFT is re-programmable on the fly and can be reset through SPI, but is not stoppable.

Figure 7-2. Atmel ATA6870 in NORM Mode

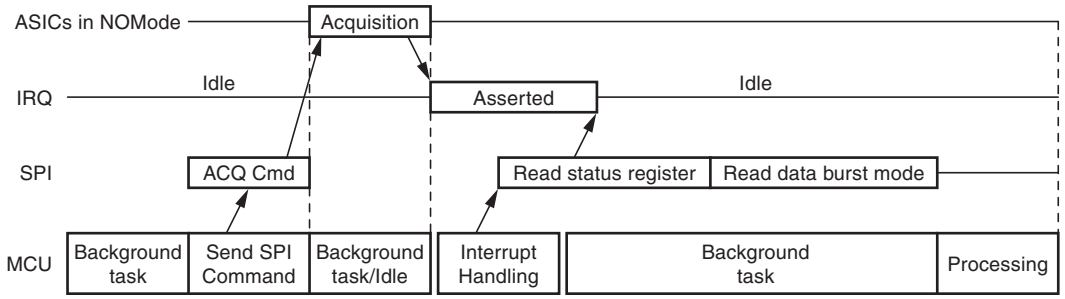

Table 7-2. Electrical Characteristics

No.	Parameters	Test Conditions	Pin	Symbol	Min.	Typ.	Max.	Unit	Type*
2.1	Supply voltage		VDDHV	V_{VDDHV}	6.9		30	V	A
2.2	Current consumption IVDDHV (Normal Mode)		VDDHV	I_{VDDHV}			15	mA	A
2.3	Current consumption in Power-down mode (PDmode) I_{VDDHV} + $I_{MBAT(i)}max$(1)	$V_{MBAT(i+1)} - V_{MBAT(i)} = 3.7V$	VDDHV				10	µA	A
2.4	Imbalance from battery cell to battery cell in Power-down Mode (PDN Mode)	$V_{MBAT(i+1)} - V_{MBAT(i)} = 3.7V$	MBAT(i+1)	$I_{MBAT(i+1)}$			10	µA	A

*) Type means: A = 100% tested, B = 100% correlation tested, C = Characterized on samples, D = Design parameter

Note: 1. Largest input current of the cell inputs MBAT(i)

7.2 Interface to Battery Cells

Each input line MBAT(i) and the supply lines VDDHV, AVSS can be protected by additional resistors and a filter capacitor as shown below.

Figure 7-3. External Components between Atmel ATA6870 and the Battery Cells

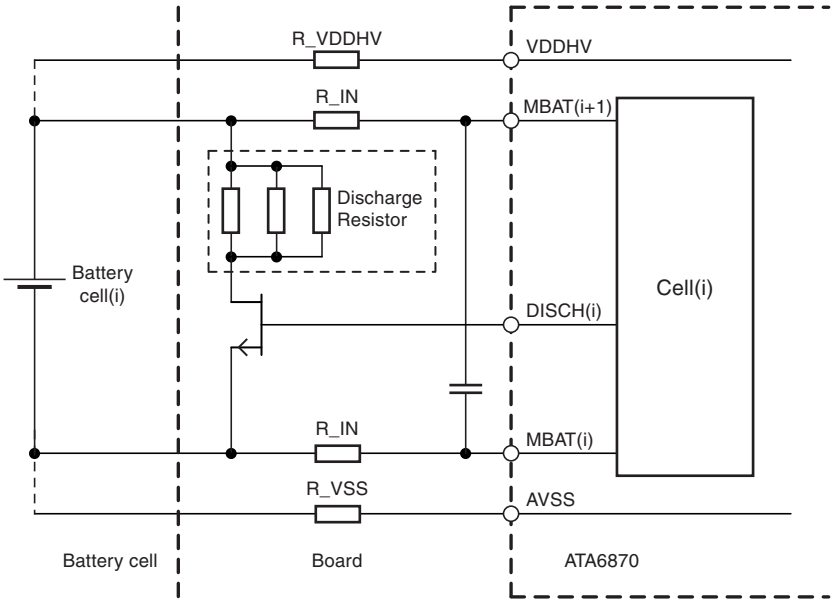

$MBAT_{(i)}$ are high impedance input (~2 MΩ). Thus, external components can be added to protect ATA6870 chip against current spikes and overvoltage at battery cell level.

Table 7-3. Electrical Characteristics

No.	Parameters	Test Conditions	Pin	Symbol	Min.	Typ.	Max.	Unit	Type*
3.1	R_IN		MBAT(i)				1	kΩ	D
3.2	R_VDDHV		VDDHV				50	Ω	D
3.3	R_VSS		AVSS				50	Ω	D

*) Type means: A = 100% tested, B = 100% correlation tested, C = Characterized on samples, D = Design parameter

7.3 Reduced Number of Battery Cells Configuration

It is possible for Atmel® ATA6870 to operate with a reduced number of cells: 3, 4, 5, and 6 cell operation are possible. In these cases, the cell-chip inputs corresponding to the missing cells should be connected to the upper cell potential of the module.

Figure 7-4. Connection with 4 Cells only

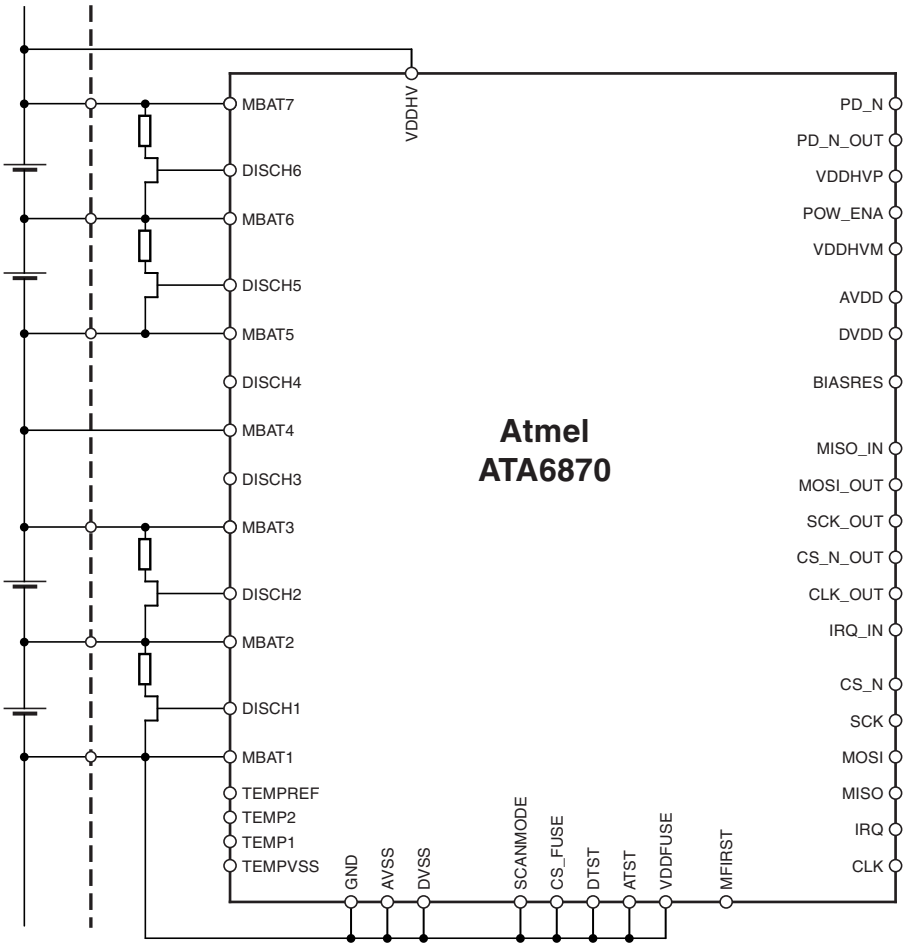

Battery cell 1 (MBAT1, MBAT2) and battery cell 6 (MBAT6, MBAT7) must always be used for the lowest/highest cell.

7.4 ATA6870 External MCU Supply

The Atmel® ATA6870 provides a 3.3V power-supply for external components such as the microcontroller unit (MCU). The input pin for this supply is pin VDDHVP, and the output pin is VDDHVM. This regulator is able to supply the MCU directly from the topmost battery cell of a string. The power regulators of all stacked Atmel ATA6870 are therefore put in serial configuration to avoid imbalance.The regulator can be disabled with the digital input pin POW_ENA.

Table 7-4. Truth Table

Pin	Symbol	Value	Function
POW_ENA	V_{POW_ENA}	Low	Voltage regulator disabled
		High	Voltage regulator enabled

Logic levels: Low = V_{DVSS}, High = V_{DVDD}

Figure 7-5. MCU Supply with the Internal Power Supply

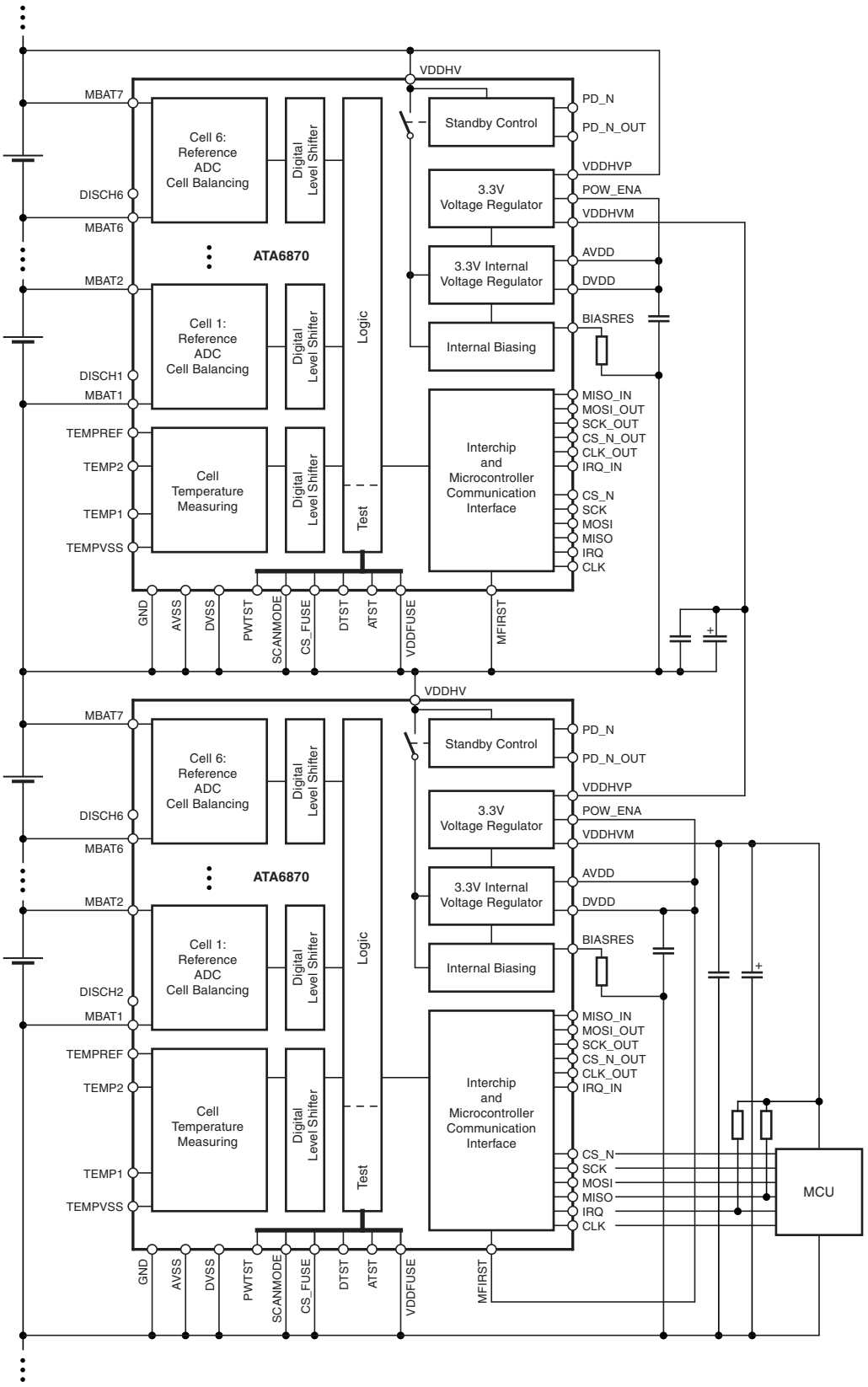

Table 7-5. Electrical Characteristics

No.	Parameters	Test Conditions	Pin	Symbol	Min.	Typ.	Max.	Unit	Type*
4.1	Supply voltage		VDDHVP	V_{VDDHVP}	6.9		33.3	V	A
4.2	Output voltage		VDDHVM	V_{VDDHVM}	3.1	3.3	3.5	V	A
4.3	DC output current		VDDHVM	I_{VDDHVM}			20	mA	A
4.4	Peak output current(1)		VDDHVM	I_{VDDHVM}			50	mA	A
4.5	Capacitor load(2)		VDDHVM		30	33		µF	D
4.6	Capacitor load(2)		VDDHVM		200	220		nF	D
4.7	High level input voltage		POW_ENA	V_{POW_ENA}	$0.7 \times V_{DVDD}$			V	A
4.8	Low level input voltage		POW_ENA	V_{POW_ENA}			$0.3 \times V_{DVDD}$	V	A
4.9	Hysteresis		POW_ENA	V_{POW_ENA}	$0.05 \times V_{DVDD}$			V	C
4.10	Input current	V_{POW_ENA} = 0V to V_{DVDD}	POW_ENA	I_{POW_ENA}	–1		+1	µA	A

*) Type means: A = 100% tested, B = 100% correlation tested, C = Characterized on samples, D = Design parameter

Notes: 1. Maximum current the power regulator can provide, time limited by thermal consideration only

2. These capacitors are mandatory

Figure 7-6. MCU Supply with an External Power Supply

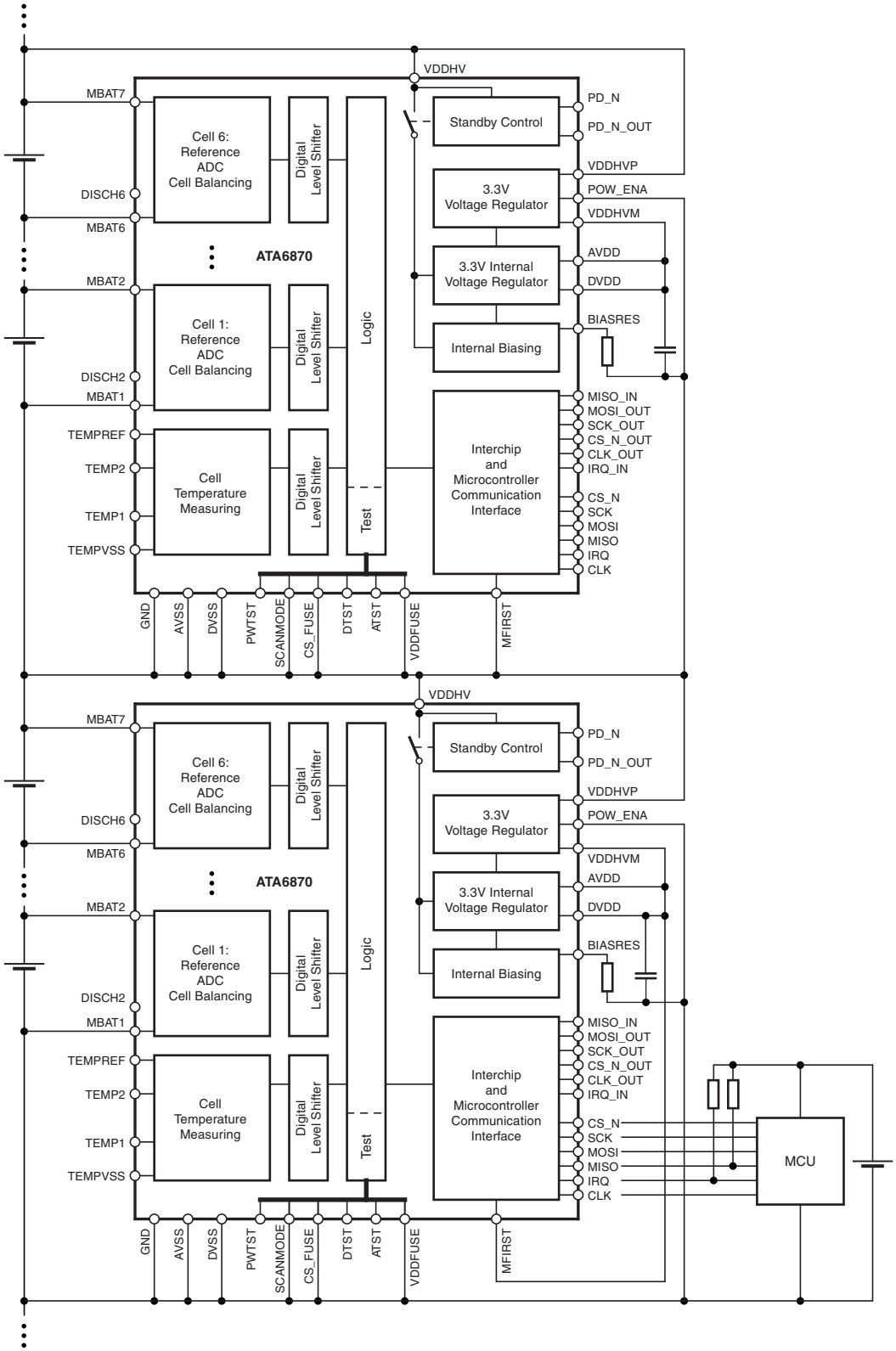

7.5 Analog Blocks

7.5.1 Battery Voltage Measuring

Figure 7-7. Block Diagram Battery Voltage Measurement

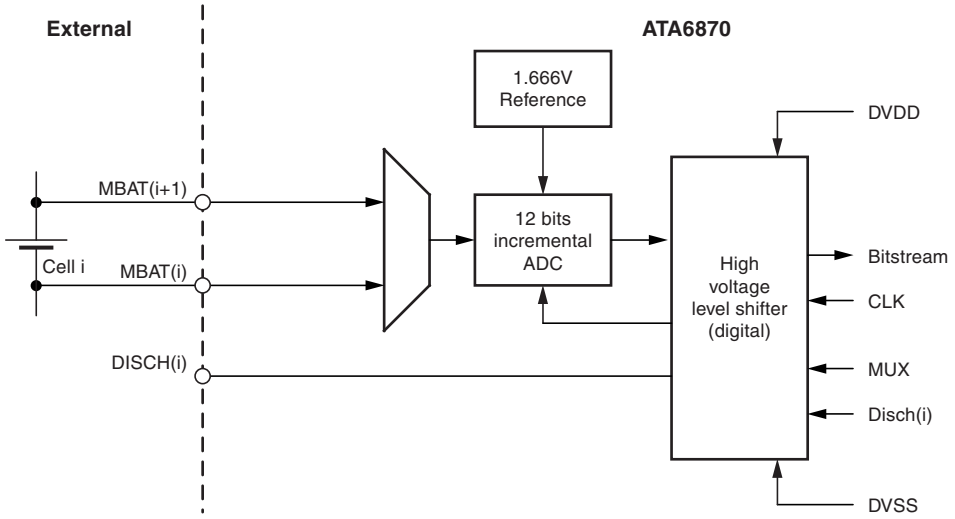

The battery voltage measurement block contains

- a 2-input multiplexer
- a voltage reference,
- a 12-bit ADC
- the upper part of digital voltage level shifters

7.5.1.1 Input Multiplexer

The multiplexer has 3 inputs. Each of the functions are described in the table below:

Table 7-6. Inputs of the Multiplexer

Input	Function
$V(MBAT_{(i+1)}, MBAT_{(i)})$	Input voltage measurement
$V(MBAT_{(i)}, MBAT_{(i)})$	Offset error acquisition of ADC

The multiplexer inputs are controlled by SPI.

7.5.1.2 12 Bits Incremental ADC

The purpose of this cell is to convert an analog input into a 12-bit digital word.

Table 7-7. Electrical Characteristics

No.	Parameters	Test Conditions	Pin	Symbol	Min.	Typ.	Max.	Unit	Type*
5.1	Accuracy of voltage channel(1)	Maximum input noise 0.5mVrms 2.2V < $V_{MBAT(i+1)} - V_{MBAT(i)}$ < 4.5V	MBAT(i+1), MBAT(i)		–10		+10	mV	A
		Maximum input noise 0.5mVrms 0V < $V_{MBAT(i+1)} - V_{MBAT(i)}$ < 5V	MBAT(i+1), MBAT(i)		–20		+20	mV	A
		Maximum input noise 0.5mVrms $V_{MBAT(i+1)} - V_{MBAT(i)}$ = 3.7V T_J = –20°C to +65°C	MBAT(i+1), MBAT(i)		–7		+7	mV	A
		Maximum input noise 0.5mVrms Aging(3)	MBAT(i+1), MBAT(i)		–11		+11	mV	C
		Maximum input noise 0.5mVrms Aging(4)	MBAT(i+1), MBAT(i)		–17		+17	mV	C
5.2	Input voltage range		MBAT(i+1), MBAT(i)	$V_{MBAT(i+1)}$, $V_{MBAT(i)}$	0		5	V	A
5.3	Input resolution (1 LSB)			V_{LSB}		1.5		mV	D
5.4	Reference voltage			V_{Ref}		1.667		V	D
5.5	Offset voltage		MBAT(i+1), MBAT(i)	$V_{MBAT(i+1)}$, $V_{MBAT(i)}$		410		LSB	A
5.6	Gain voltage		MBAT(i+1), MBAT(i)	$V_{MBAT(i+1)}$, $V_{MBAT(i)}$		655		LSB/V	A
5.7	System clock		CLK	f_{CLK}	450	500	550	kHz	D
5.8	SPI interface clock		SCK	f_{SCK}			0.5 × f_{CLK}		D
5.9	Conversion rate(2)	$t_{conv} = (2^{12} + 1) / f_{CLK}$		t_{conv}		8.194		ms	D
5.10	Input bandwidth		MBAT(i+1), MBAT(i)	f_{BW}		50		Hz	D

*) Type means: A = 100% tested, B = 100% correlation tested, C = Characterized on samples, D = Design parameter

Notes:
1. The accuracy of the voltage channels is guaranteed with no external resistor in the MBAT(i), MBAT(i+1) lines.
2. Conversion rate without readout times of SPI
3. Aging temperature T_J = 125°C, drift measured at 25°C and 85°C
4. Aging temperature T_J = 125°C, drift measured at –40°C

Converting ADC Results to Voltage

The silicon is factory adjusted by measuring offset voltage (VOffset) with both ADC inputs connected to MBATi and calibration of the adc($MBAT_{i+1}$) value to 3031 at $MBAT_{i+1}$ = 4.0V (see Figure 7-8).

Figure 7-8. Characteristics of AD-converter

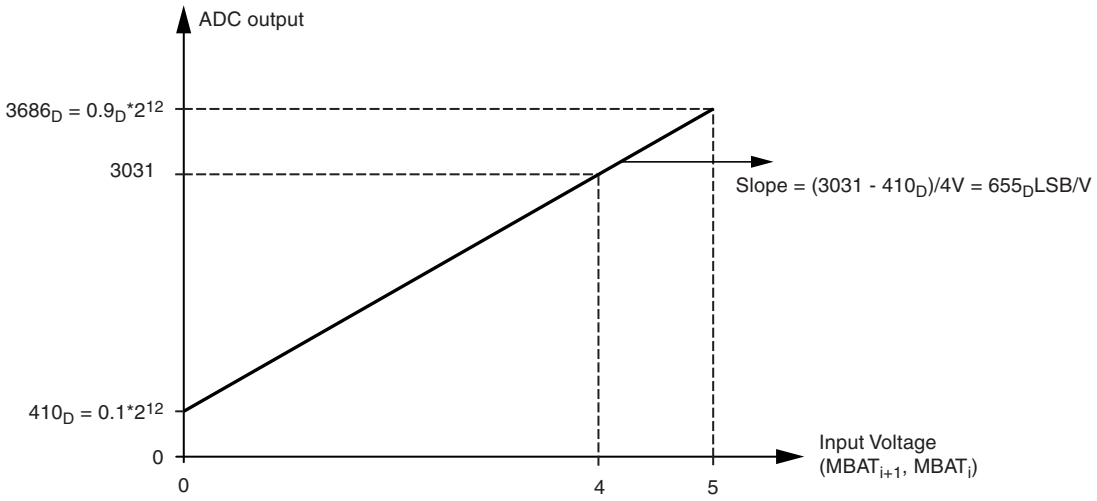

adc(VOffset): ADC result with both ADC inputs connected to $MBAT_i$ (0V input voltage)

adc($VMBAT_{i+1}$-$VMBAT_i$): Uncorrected ADC result of the ADC input voltage

Standard Procedure with Frequent Offset Adjustment

To use the frequent offset adjustment of the ADC the following parameters need to be measured:

adc(VOffset) ADC result with both ADC inputs connected to $MBAT_i$ (0V input voltage)
adc($VMBAT_{i+1}$-$VMBAT_i$) Uncorrected ADC result of the ADC input voltage

Calculation of the battery cell voltage:

$VIn = 4V \times (adc(VMBAT_{i+1}\text{-}VMBAT_i) - adc(VOffset)) / (3031 - adc(VOffset))$
with $VIn = V(MBAT_{i+1})\text{-}V(MBAT_i)$

It's not necessary to measure VOffset during every measuring cycle.

Regular updates are sufficient.

Standard Procedure without Offset Adjustment

With increasing input voltages the failure caused by the ADC can be ignored. In this case the battery cell voltage can be calculated by the following equation:

$$\mathbf{VIn = 4V \times (adc(VMBAT_{i+1}\text{-}VMBAT_i) - 0.1 \times 2^{12}) / (3031 - 0.1 \times 2^{12})}$$

The following simplification can be done with less than 1mV rounding error:

$$\mathbf{VIn = 1.52656 \times 10^{-3} \times (adc(VMBAT_{i+1}\text{-}VMBAT_i) - 410)}$$

7.5.1.3 Acquisition Time and Clocking

The acquisition time depends on the number of Atmel® ATA6870s to be addressed.

Table 7-8. Electrical Characteristics

Number of ATA6870	SCK Frequency (kHz)	CLK Frequency (kHz)	Conversion Time (ms)	Total Acquisition Duration (ms)(1)
1	250	500	8.2	9.5
2	250	500	8.2	10.2
3	250	500	8.2	10.8
4	250	500	8.2	11.5
5	250	500	8.2	12.2
6	125	500	8.2	17.0
7	125	500	8.2	18.4
8	125	500	8.2	19.7
9	125	500	8.2	21.1
10	62.5	500	8.2	36.1
11	62.5	500	8.2	38.8
12	62.5	500	8.2	41.5
13	62.5	500	8.2	44.2
14	62.5	500	8.2	46.8
15	62.5	500	8.2	49.5
16	62.5	500	8.2	52.2

Notes: 1. The total acquisition time takes the following into account:
- ADC conversion
- Reading of voltage values in burst mode for all ATA6870 devices,
- Reading of temperature values for all ATA6870 devices (only one temperature input is read).

SPI clock (pin SCK) must a maximum of half the frequency of the system clock CLK.

7.5.2 Battery Cell Discharge

Each battery cell can be discharged with an external resistor and an NMOS transistor.

Figure 7-9. External Circuit for Cell Balancing

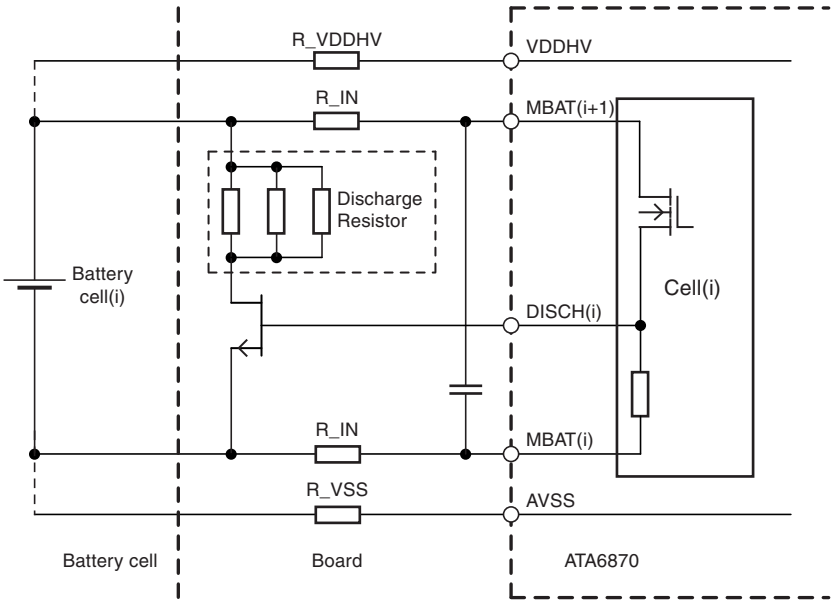

The pin DISCH(i) (Discharge for battery cell i) is intended to switch on the external discharge resistor in parallel to the battery cell to bypass charge current for cell balancing reasons.

The pin DISCH(i) is a digital output:

No discharge: $V_{DISCH(i)} = V_{MBAT(i)}$

Discharge: $V_{DISCH(i)} = V_{MBAT(i+1)}$

Table 7-9. Electrical Characteristics

No.	Parameters	Test Conditions	Pin	Symbol	Min.	Typ.	Max.	Unit	Type*
6.1	Operating voltage range		MBAT(i)	$MBAT_{(i+1)} - MBAT_{(i)}$	1.5		5	V	A
6.2	High-level output voltage	$I_{DISCH(i)} = -10\mu A$, $MBAT_{(i+1)} - MBAT_{(i)}$ = 1.5V to 5V	DISCH(i)	$V_{DISCH(i)} - V_{MBAT(i)}$	$V_{MBAT(i+1)} -$ 50 mV			V	A
6.3	High-level output voltage	$I_{DISCH(i)} = -1mA$ $MBAT_{(i+1)} - MBAT_{(i)}$ = 3V to 5V	DISCH(i)	$V_{DISCH(i)} - V_{MBAT(i)}$	$V_{MBAT(i+1)} -$ 0.6V			V	A
6.4	Pull-down resistor(1)		DISCH(i)-MBAT(i)		60		140	kΩ	A

*) Type means: A = 100% tested, B = 100% correlation tested, C = Characterized on samples, D = Design parameter

Note: 1. Integrated pull-down resistor between pins DISCH(i) and MBAT(i)

7.5.3 Temperature Channel

The temperature sensors are based on a resistor divider using a standard resistor and an NTC resistor. This resistor divider is connected to the reference of the ADC for temperature measuring. As the ADC is sharing same reference value, the output of temperature measurement with ADC is ratio metric.

Figure 7-10. Battery Cell Temperature Measurement

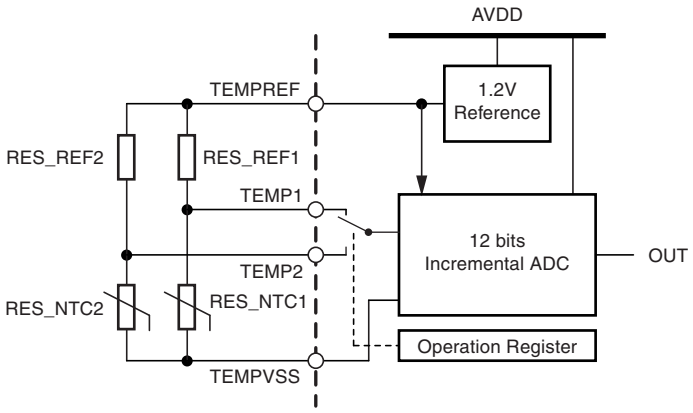

During one measuring cycle only one temperature input can be measured by the ADC. The channel can be selected in the Operation Register (0x02) by the TempMode bit (bit 3).

The ADC output is equal to:

$$\text{out} = 2048 \times \left(1 + \frac{\text{RES_NTC(1)}}{(\text{RES_NTC(1)} + \text{RES_REF(1)})} \times \frac{8}{15} - \frac{8}{10}\right)$$

Table 7-10. Electrical Characteristics

No.	Parameters	Test Conditions	Pin	Symbol	Min.	Typ.	Max.	Unit	Type*
7.1	Reference voltage		TEMPREF	$V_{TEMPREF} - V_{TEMPVSS}$	1.1	1.2	1.3	V	A
7.2	Reference voltage output current		TEMPREF	$I_{TEMPREF}$			2	mA	A
7.3	Input voltage range		TEMP1	V_{TEMP1}	0		$V_{TEMPREF}$	V	A
7.4	Input voltage range		TEMP2	V_{TEMP2}	0		$V_{TEMPREF}$	V	A
7.5	Input current	VTEMPx = 1.2V	TEMPx	I_{TEMPx}			1	µA	A
7.6	Code output for value(RES_NTCx) = value (RES_REFx)	V(TEMPi, TEMPVSS) = 0.5 × V(TEMPREF, TEMPVSS)			931_D	956_D	981_D		A
7.7	Code output for value(RES_NTC) = 0	V(TEMPi, TEMPVSS) = 0			385_D	410_D	435_D		A
7.8	Code output for value(RES_NTC) = infinite	V(TEMPi, TEMPVSS) = V(TEMPREF)			1477_D	1502_D	1527_D		A

*) Type means: A = 100% tested, B = 100% correlation tested, C = Characterized on samples, D = Design parameter

7.5.4 Internal Voltage Regulator

The regulator output is pin AVDD. The pins AVDD and DVDD have to be connected together. An external filtering capacitor (10nF recommended) is used to filter and stabilize the function. The regulator output can be used to supply outside functions at the price of power supply imbalance between battery cells.

Table 7-11. Electrical Characteristics

No.	Parameters	Test Conditions	Pin	Symbol	Min.	Typ.	Max.	Unit	Type*
8.1	Supply voltage range		VDDHV	V_{VDDHV}	6.9		30	V	A
8.2	Regulated output voltage		AVDD	V_{AVDD}	3.1	3.3	3.5	V	A
8.3	Output current		AVDD	I_{AVDD}	0		5	mA	A
8.4	C_{load} (load capacitor)		C_{load}		9	10		nF	D

*) Type means: A = 100% tested, B = 100% correlation tested, C = Characterized on samples, D = Design parameter

7.5.5 Central Biasing

This block generates a precise bias current to supply internal blocks of the IC. Connection of any external loads to this pin is not allowed.

Table 7-12. Electrical Characteristics

No.	Parameters	Test Conditions	Pin	Symbol	Min.	Typ.	Max.	Unit	Type*
9.1	Biasing voltage		BIASRES	$V_{BIASRES}$		1.2		V	A
9.2	External resistor			$R_{Refbias}$		121		kΩ	D
9.3	Tolerance			$\Delta R_{Refbias}$	–1		+1	%	D
9.4	Maximum external parasitic capacitor		BIASRES	$C_{External}$			50	pF	D

*) Type means: A = 100% tested, B = 100% correlation tested, C = Characterized on samples, D = Design parameter

Figure 7-11. Internal Bias Current Generation

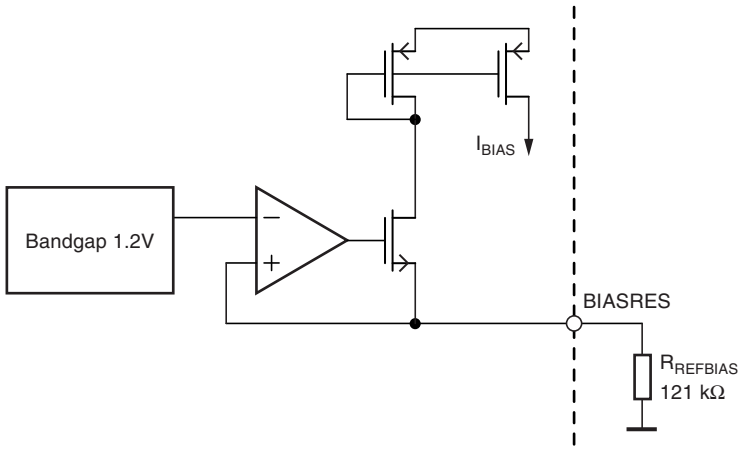

7.5.6 RC Oscillator

Table 7-13. Internal RC Oscillator Frequency

No.	Parameters	Test Conditions	Pin	Symbol	Min.	Typ.	Max.	Unit	Type*
10.1	Oscillator frequency			f_{Osc}	45	50	55	kHz	A

*) Type means: A = 100% tested, B = 100% correlation tested, C = Characterized on samples, D = Design parameter

7.5.7 Power On Reset

The Power On Reset is used to initialize the digital part at power-up.

The Power On Reset circuit is functional when the voltage at pin DVDD is larger than V_{POROP}.

There are two reset sources:

System “hard reset”
System hard reset occurs when the voltage at pin DVVD goes below the Power On Reset threshold.

ATA6870 registers are set to their initial values.

After t = t_{RESET}, the MCU can access the Atmel® ATA6870.

Figure 7-12. Power On Reset

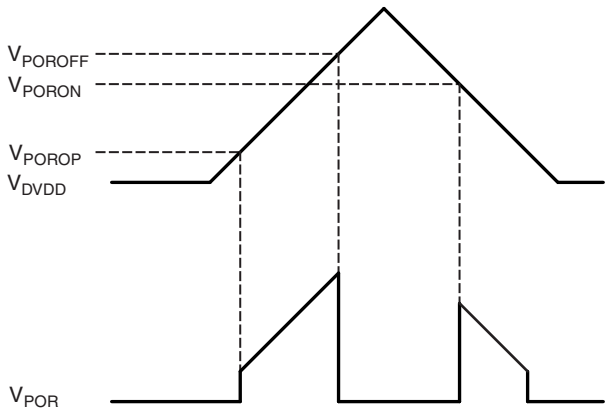

Table 7-14. Electrical Characteristics

No.	Parameters	Test Conditions	Pin	Symbol	Min.	Typ.	Max.	Unit	Type*
11.1	Power On Reset Functional		DVDD	V_{POROP}			0.8	V	A
11.2	Power On Reset Off		DVDD	V_{POROFF}	1.5		2.5	V	A
11.3	Power On Reset Hysteresis		DVDD	$V_{POROFF} - V_{PORON}$	0.03			V	C
11.4	Power On Reset Time			t_{RESET}			800	µs	A

*) Type means: A = 100% tested, B = 100% correlation tested, C = Characterized on samples, D = Design parameter

7.6 Digital Part

7.6.1 General Features

The digital parts of the ATA6870 includes the following blocks:

- 4-Wire-SPI Full Duplex Communication with External Host MCU
- SPI System Protocol Management (Frames Decoding) and Configuration Registers Bank
- Interrupt to MCU Management
- Operations Decoding (Voltage and/or Temperature Acquisition) and Analog Part Control
- Low Frequency Timer (50kHz) for Wake-up Management

7.6.2 Host Interface

Figure 7-13. Host Interface

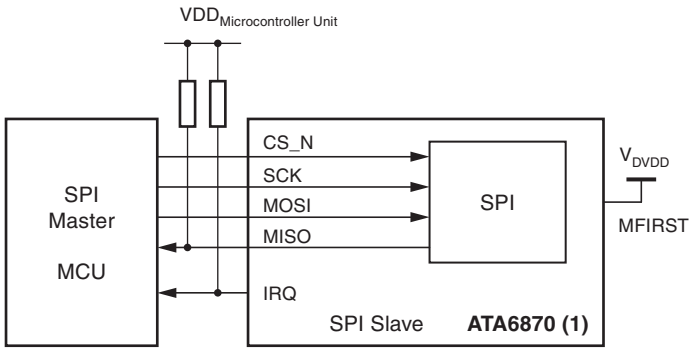

The communication between Atmel® ATA6870 (1) and its host MCU, as well as ATA6870 (n) and ATA6870(n-1) is based on a 4 wire serial/parallel SPI interface (CS_N, SCK, MISO, MOSI) and an interrupt line (IRQ). The SPI interface allows register read and write operations. The interrupt line indicates events that require host intervention.

Atmel ATA6870(n)'s 4 wire-SPI bus inputs (CS_N, SCK, MOSI) are up-shifted through level shifters. They are internally connected to the outputs CS_N_OUT, SCK_OUT, MOSI_OUT and connected to ATA6870(n+1) (CS_N, SCK, MOSI).

Atmel ATA6870(n)'s 4 wire-SPI bus output (MISO) and ATA6870(n)'s interrupt (IRQ) are down-shifted through level shifters and connected to ATA6870(n-1) (MOSI_IN, IRQ_IN) or host MCU (n = 1).

7.6.3 Interrupt

In NORM Mode (Normal Mode), the reasons for an interrupt request are:

- The availability of measured data (data ready)
  When a voltage measurement is completed, the dataRdy flag is set in the status register.
  The ATA6870 cannot decode any new incoming operation until the dataRdy flag is released.
- The low frequency timer (LFT) elapses (wakeup)
  The wakeup flag is set in the status register when the LFT elapses. The LFT is controlled via the SPI interface.
- A transmission error is flagged during the last SPI transaction (the commError bit is set in the status register).
- If an undervoltage condition occurs. The undervoltage function is controllable via SPI interface.

A mask bit in the irqMask register corresponds to each interrupt source. The MCU must read the ATA6870 status register before the interrupt is cleared. With each SPI access a 16-bit IRQ state is sent via MISO to the MCU with the interrupt state of all stacked ATA6870 (see Section 7.6.4.1 “SPI Transaction Fields” on page 27).

In PDmode (Power Down), if the digital control part and MCU are not supplied, neither SPI command nor interrupt are transmitted over the interface.

7.6.4 SPI Interface

The full duplex SPI interface block allows communication with the host MCU using four wires (MISO, MOSI, SCK and CS_N). SPI transactions are based on a byte-access MSB first protocol.

7.6.4.1 SPI Transaction Fields

Most of the time, the SPI frame is defined by 4 distinct fields:

IDENTIFICATION (2 bytes): 16-bit chip identification (MOSI), in parallel 16-bit IRQ state (MISO)

CONTROL (1 byte): 7-bit register address + 1-bit read/write information (MOSI)

DATA (k byte): k*8 bits data (MOSI or MISO depending on the access direction)

CHKSUM (1 byte): 8 bits if the Chksum_ena bit is set in the Ctrl register (register 0x01, bit 4)

Figure 7-14. SPI Transaction Fields Organization

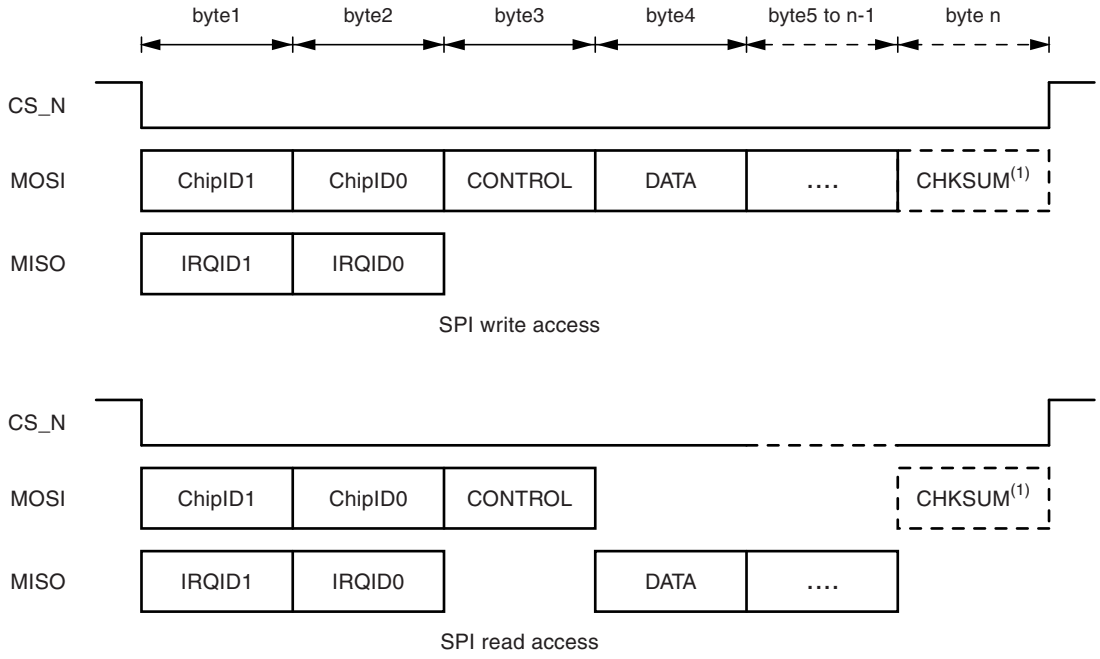

Note: 1. Only send if chksum_ena bit set to 1 in the Ctrl register

7.6.4.2 Identification Field

Atmel ATA6870 Chip Identification

The two chip identification bytes are sent over MOSI to the Atmel® ATA6870(n) in the chain. The ATA6870(n) checks the LSB. When LSB=1, the information is for this device. The SPI address will be decoded and the information processed. Independent from this the identification bytes are shifted by one bit to the right and transferred to the next ATA6870(n) in the chain. The 2 identification bytes allows the identification of up to 16 ATA6870s.

Figure 7-15. Identification Field: Chip-ID Reception

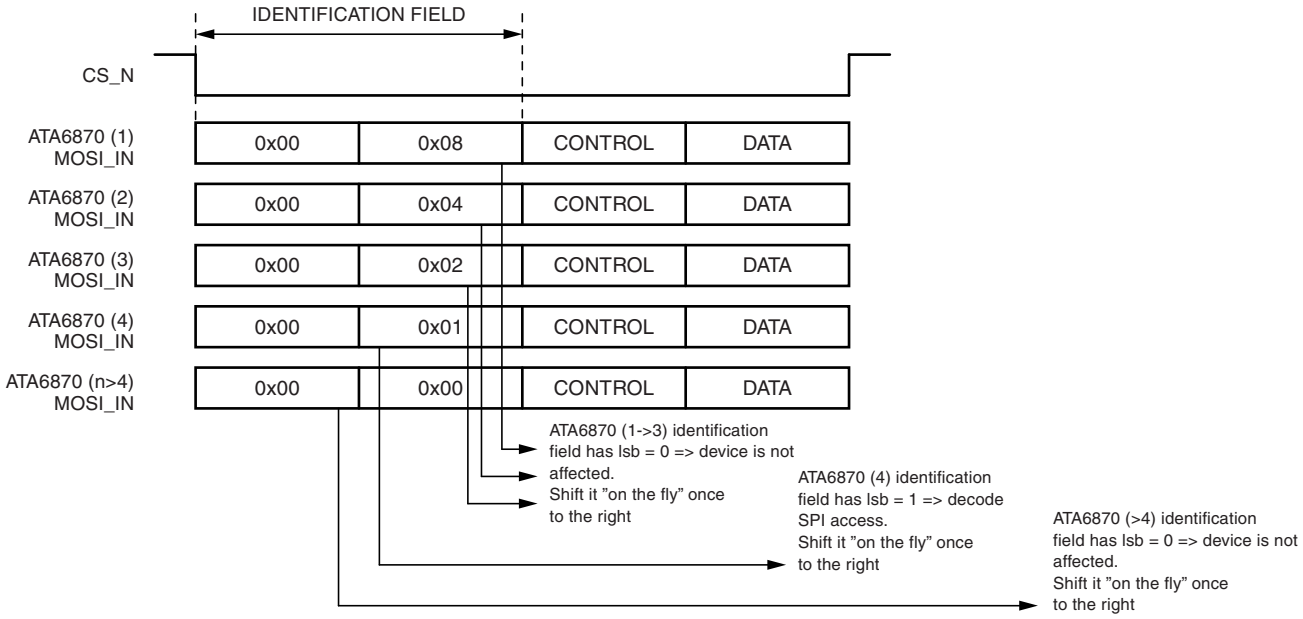

7.6.4.3 ATA6870 IRQ Identification

Figure 7-16. IRQ Propagation Scheme

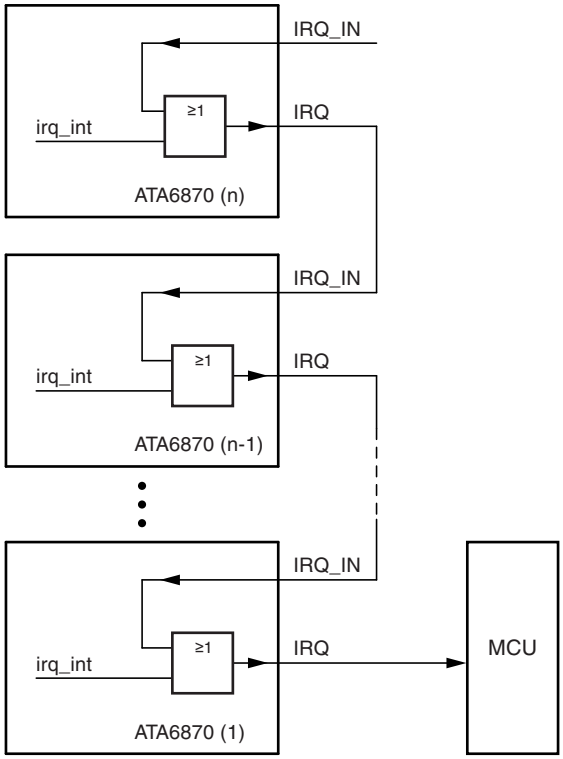

ATA6870(n) IRQ output is connected to ATA6870(n-1) IRQ_IN input.

ATA6870(n-1) IRQ output is a logic OR between IRQ_IN and its internal irq_int signal.

ATA6870(1) IRQ output is connected to MCU.

Figure 7-17. Identification Field: Interrupt State Emission

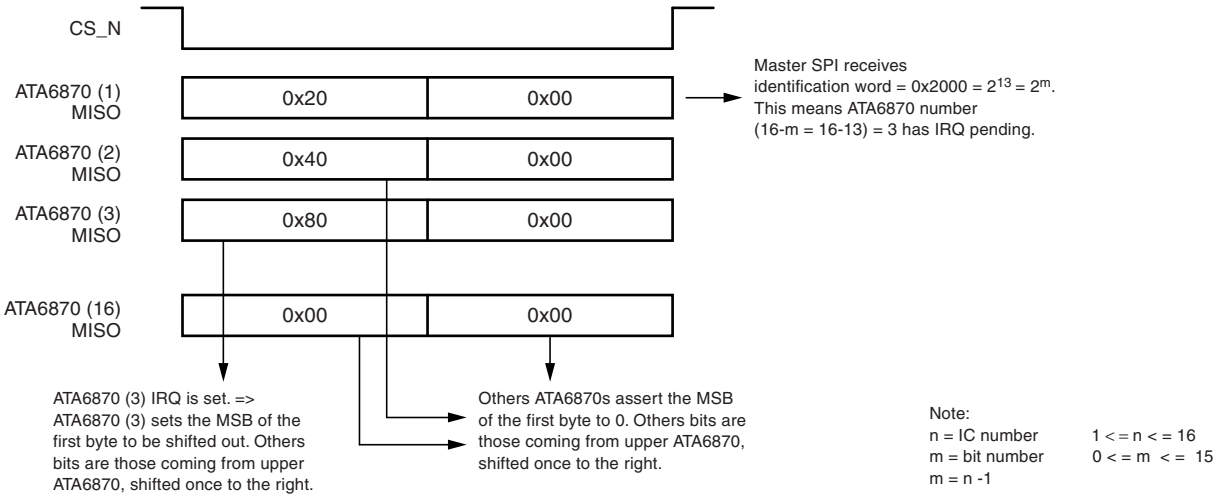

With each SPI access, a 16- bit IRQ state is send via MISO synchronous to the identification field to the MCU with the interrupt state of all stacked Atmel ATA6870. The MCU, interrupted by an ATA6870, has to send the identification field to check the IRQ levels (in that case the checksum is not considered). It is also possible to continue the transaction with CONTROL and DATA field. The MCU decodes the identification field shifted in MISO input. When bit m is set, ATA6870(16-m) is requesting interrupt.

Figure 7-18. Identification Field

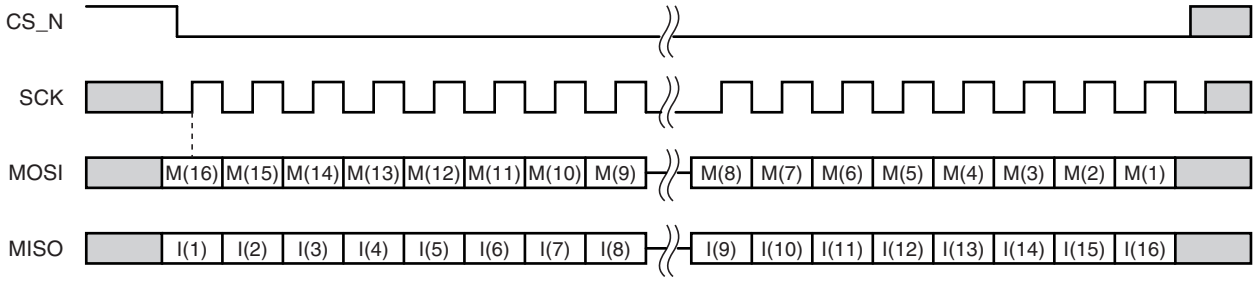

7.6.4.4 CONTROL Field

The CONTROL field defines the register to access and the direction (read/write). The size of the data (8, 16, or 112 bits) is defined by the address value in the CONTROL field.

Table 7-15. Control Field

CONTROL Field	Bit7	Bit6	Bit5	Bit4	Bit3	Bit2	Bit1	Bit0
	A6	A5	A4	A3	A2	A1	A0	W/Rd

7.6.4.5 DATA Field

The DATA field can be composed of 1, 2, or 14 bytes depending on the accessed register. Irrespective of the data direction, a byte is always transmitted with MSB first; a multi-byte word is transmitted with MSByte first.

Figure 7-19. CONTROL and DATA Fields - 8-bits Register Write

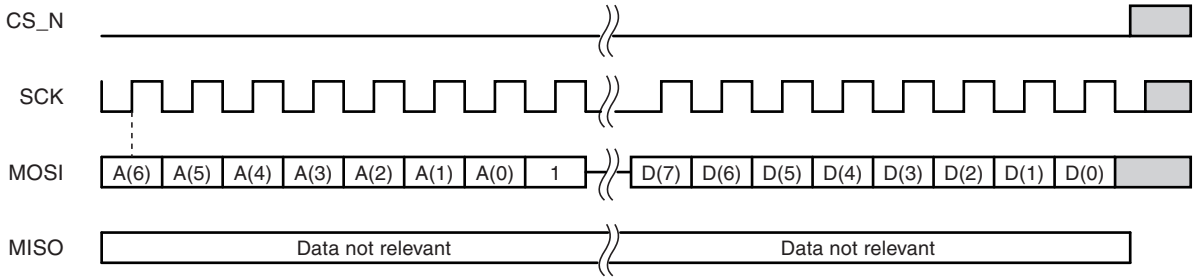

Figure 7-20. CONTROL and DATA Fields - 8-bits Register Read

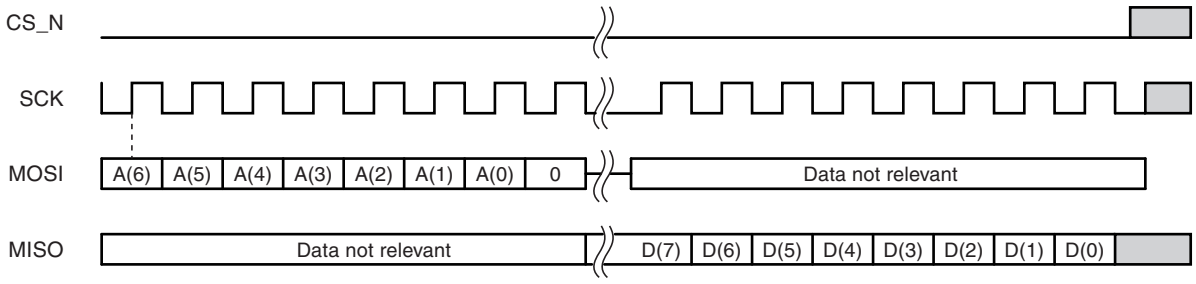

Figure 7-21. CONTROL and DATA Fields - 16-bits Register Write

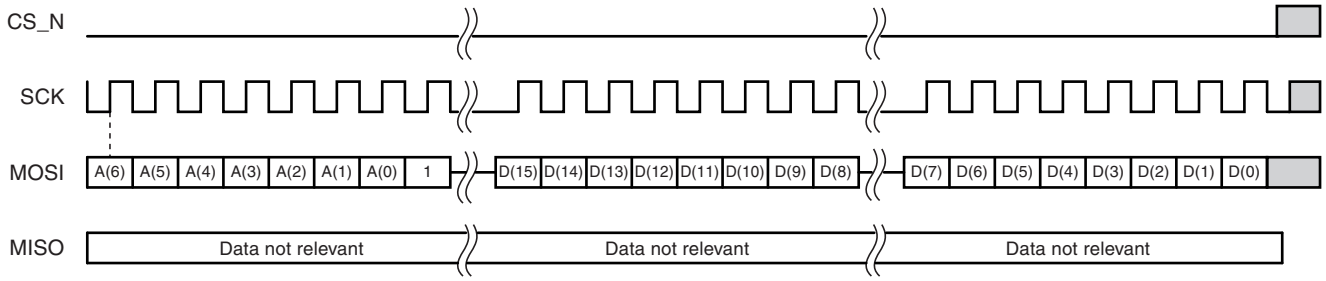

Figure 7-22. CONTROL and DATA Fields - 16-bits Register Read

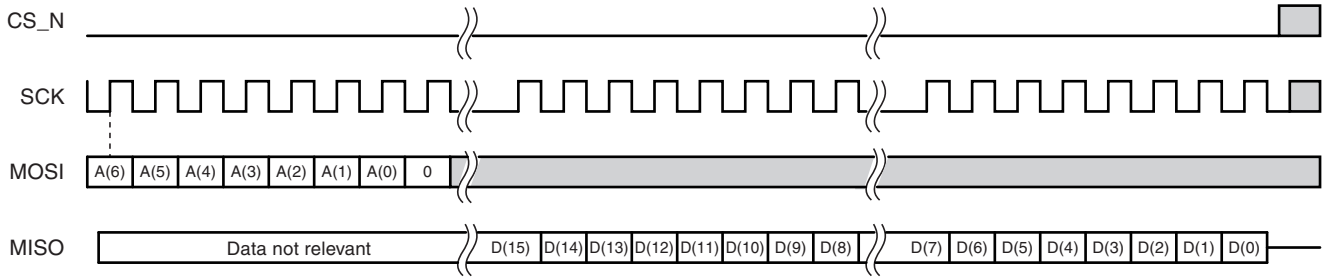

In order to retrieve results from all channels in one Atmel® ATA6870 without having to request for each channel, an SPI 112-bit read-only "burst access" (dataRd16Burst register; address = 0x7F) is implemented. When requested, the ATA6870 outputs its 6 voltage channels V6 to V1 and one of the two temperature channels T2 and T1 in sequence on the SPI bus. The diagrams below show the CONTROL and DATA fields of such an access.

Figure 7-23. CONTROL and DATA Fields - 112-bits Register Read

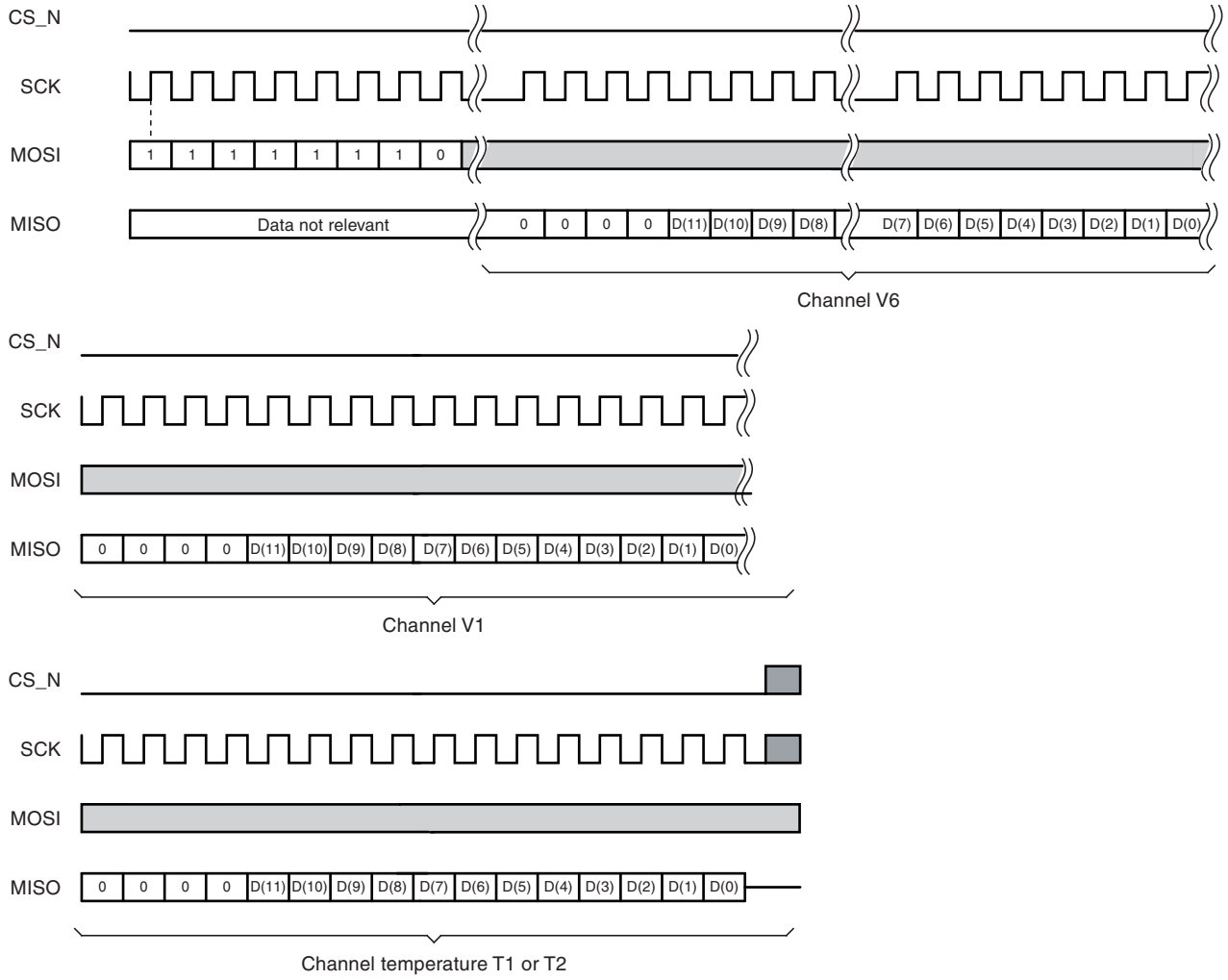

One Atmel® ATA6870 frame corresponds to the set of results obtained in one Atmel ATA6870. An Atmel ATA6870 frame is formatted as follows:

Figure 7-24. SPI Access to dataRd16burst Register 0x7F

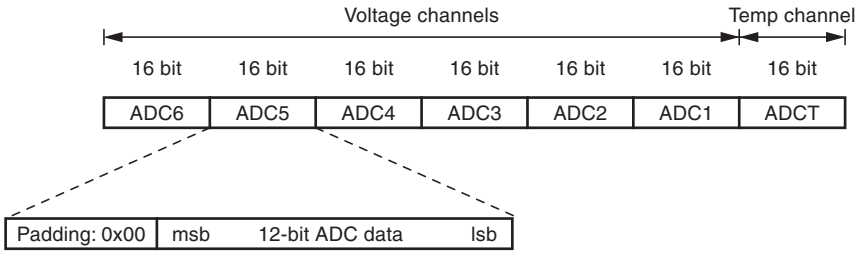

When reading data of chained ATA6870, data is transferred as follow:

Figure 7-25. Example with two Atmel ATA6870 in a Chain

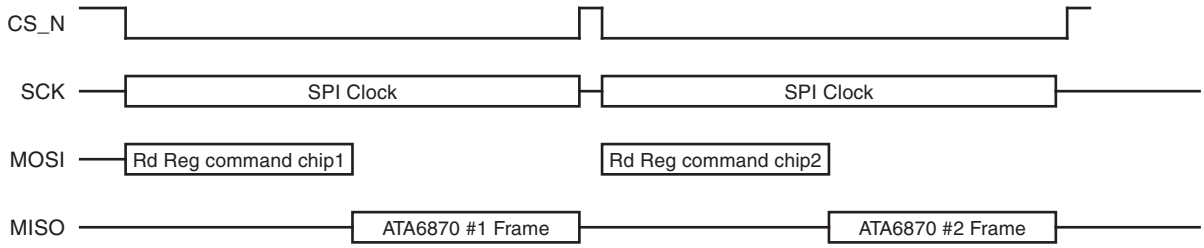

7.6.4.6 Communication Error

Correct communication can be verified using various functions of the Atmel ATA6870.

For internal synchronization, it is mandatory to keep CLK running during any SPI access; CLK must be set on 4 clock cycles (at least) before SPI access starts, and must be kept on 4 clock cycles (at least) after SPI access ends up. Keeping at least 4 CLK clock cycles between two consecutive SPI accesses is mandatory. If this is not the case, the Atmel ATA6870s will detect an error in communication. The CommError bit will be set in the Status Register 0x06).

Figure 7-26. SPI Access and CLK Activity

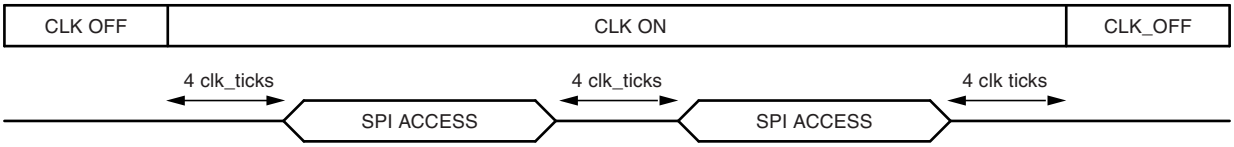

The Atmel ATA6870 verifies that complete bytes (8bits long) are always transmitted. A transition starts when CS_N goes to low and it ends when CS_N goes to high. The number of clock cycles (signal SCK) is monitored during the transition. This number of clock cycles has to be modulo 8. If the CS_N length is not modulo 8 clock cycles, the bit CommError is set in the Status register. This will cause an interrupt to the MCU if the CommError is not masked by the commErrorMsk bit in the IrqMask register.

7.6.4.7 CHKSUM Field

The Atmel® ATA6870 provides the possibility of verifying the transmitted data using a checksum. Setting chksum_ena bit to 1 in the Ctrl register (default = 0) activates the checksum feature.

The chksum field is an 8-bit checksum computed from the proceeding data (control and data fields, byte 3 to byte n-1). It is based on the polynomial $x^8+x^2+x^1+1$. The way it is computed is depicted below:

Figure 7-27. LFSR-based Checksum Computation

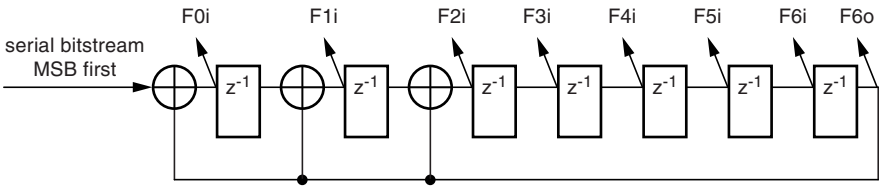

The checksum is calculated from the CONTROL field and DATA field by a polynomial division. The DATA field can consist of 1 byte up to 14 bytes (112-bit read-only “burst access”). The IDENTIFICATION field (2 bytes) is not used to generate the checksum. The checksum is always sent by the microcontroller, independent of read write mode.

The checksum is in the LFSR (Linear Feedback Shift Register) when the complete bitstream (the whole fields of the transaction) followed by 0x00 have been shifted in the LFSR.

The checksum verification on the complete data transmission was OK when the complete bitstream followed by the checksum have been shifted in the LFSR, and the content of the LFSR is 0x00. If this is not the case, the receiving ATA6870 will set the chkError bit in the status register. This will cause an interrupt to the MCU if the chkError is not masked by the chkErrorMsk bit in the IrqMask register. See the example below. The checksum is serially computed from the 8-bit value 0x57. So the bitstream 0x5700 is shifted in the LFSR. The resulting checksum is [f6o, f6i, f5i … f0i] at the last shift in cycle:

Table 7-16. checksum = [f6o, f6i, ... f0i] = 0xA2

	Input	f01	f1i	f2i	f3i	f4i	f5i	f6i	f6o
	X	0	0	0	0	0	0	0	0
5_D	0	0	0	0	0	0	0	0	0
	1	1	0	0	0	0	0	0	0
	0	0	1	0	0	0	0	0	0
	1	1	0	1	0	0	0	0	0
7_D	0	0	1	0	1	0	0	0	0
	1	1	0	1	0	1	0	0	0
	1	1	1	0	1	0	1	0	0
	1	1	1	1	0	1	0	1	0
0_D	0	0	1	1	1	0	1	0	1
	0	1	1	0	1	1	0	1	0
	0	0	1	1	0	1	1	0	1
	0	1	1	0	1	0	1	1	0
	0	0	1	1	0	1	0	1	1
	0	1	1	0	1	0	1	0	1
	0	1	0	0	0	1	0	1	0
	0	0	1	0	0	0	1	0	1
		0x2				0xA			

During an SPI write access, the checksum is computed by the MCU and sent MSB first in the CHKSUM field. For an SPI read access, the checksum is computed by the Atmel® ATA6870 and is checked by the MCU. During CHKSUM, MCU has to send 0x00 on MOSI, and must check that its own LFSR equals 0x00 at the end of CHKSUM field.

7.6.4.8 Device Position

For the Atmel ATA6870 (1), this is the device on the lowest level, the SPI has to work as a standard logic CMOS interface to the MCU. The SPI's between stacked ATA6870 have to work as level-shifters based on current sources. These different physical interfaces can be selected by the Pin MFIRST.

Table 7-17. Device Position

MFIRST	Configuration
0	ATA6870 (2) to ATA6870 (n)
1	ATA6870 (1)

Table 7-18. Electrical Characteristics

No.	Parameters	Test Conditions	Pin	Symbol	Min.	Typ.	Max.	Unit	Type*
12.1	High level input voltage		MFIRST	MFIRST	0.7 × DVDD			V	A
12.2	Low level input voltage		MFIRST	MFIRST			0.3 × DVDD	V	A
12.3	Hysteresis		MFIRST	MFIRST	0.05 × DVDD			V	C
12.4	Input current	V_{MFIRST} = 0V to V_{DVDD}	MFIRST	MFIRST	–1		+1	µA	A

*) Type means: A = 100% tested, B = 100% correlation tested, C = Characterized on samples, D = Design parameter

7.6.5 Digital Inputs and Outputs

7.6.5.1 Digital Output Characteristics

Digital Output Characteristics (MISO, IRQ)

If the Atmel® ATA6870 is configured as first IC (master) in a string (MFIRST = 1), these pins are configured as an open drain output. If the ATA6870 is configured to be a stacked IC (MFIRST = 0), the output signals MISO and IRQ coming from the upper IC need to be transferred to the MISO and IRQ outputs of the master in the string via the MISO_IN and IRQ_IN inputs. In this case the MISO and IRQ outputs act as level shifters based on current sources.

Table 7-19. Electrical Characteristics

No.	Parameters	Test Conditions	Pin	Symbol	Min.	Typ.	Max.	Unit	Type*
13.1	Low level output voltage	I_{OUT} = +5mA MFIRST = 1	MISO, IRQ	V_{MISO}, V_{IRQ}			0.2 × VDD	V	A
13.2	Low level output current	±0.3V, MFIRST = 0	MISO, IRQ	I_{MISO}, I_{IRQ}	–13		–8	µA	A
13.3	High level output current	±0.3V, MFIRST = 0	MISO, IRQ	I_{MISO}, I_{IRQ}	–65		–40	µA	A

*) Type means: A = 100% tested, B = 100% correlation tested, C = Characterized on samples, D = Design parameter

Digital Output Characteristics (MOSI_OUT, SCK_OUT, CS_N_OUT, CLK_OUT)

These outputs act as level shifters based on current sources. They transfer the input signals MOSI_OUT, SCK_OUT, CS_N_OUT, CLK_OUT to the next IC above. If the ATA6870 is the IC on the top level of a string, these outputs must be connected to VDDHV.

Table 7-20. Electrical Characteristics

No.	Parameters	Test Conditions	Pin	Symbol	Min.	Typ.	Max.	Unit	Type*
14.1	Low level output current	VDDHV + 1V to VDDHV + 2V	(1)	V(1)	25		55	µA	A
14.2	High level output current	VDDHV + 1V to VDDHV + 2V	(1)	V(1)	–1		+1	µA	A

*) Type means: A = 100% tested, B = 100% correlation tested, C = Characterized on samples, D = Design parameter

Note: 1. MOSI_OUT, SCK_OUT, CS_N_OUT, CLK_OUT

7.6.5.2 Digital Input Characteristics

Digital Input Characteristics (MISO_IN, IRQ_IN)

Table 7-21. Electrical Characteristics

No.	Parameters	Test Conditions	Pin	Symbol	Min.	Typ.	Max.	Unit	Type*
15.1	Low level input current	(VDDHV + 1.4V) ±0.3V	MISO_IN, IRQ_IN	I_{MISO_IN} I_{IRQ_IN}	13			µA	A
15.2	High level input current	(VDDHV + 1.4V) ±0.3V	MISO_IN, IRQ_IN	I_{MISO_IN} I_{IRQ_IN}			40	µA	A

*) Type means: A = 100% tested, B = 100% correlation tested, C = Characterized on samples, D = Design parameter

Digital Input Characteristics (CS_N, SCK, MOSI, CLK)

Table 7-22. Electrical Characteristics

No.	Parameters	Test Conditions	Pin	Symbol	Min.	Typ.	Max.	Unit	Type*
16.1	High level input voltage	MFIRST = 1	(1)	$V^{(1)}$	0.7 × DVDD		DVDD	V	A
16.2	Low level input voltage	MFIRST = 1	(1)	$V^{(1)}$			0.3 × DVDD	V	A
16.3	High level input current	MFIRST = 1		$I^{(1)}$	50		100	µA	A
16.4	Low level input current	MFIRST = 1		$I^{(1)}$	–130		–70	µA	A
16.5	Low level input current	MFIRST = 0, $V^{(1)}$ = 1V to 2V	(1)	$I^{(1)}$	–55		–35	µA	A
16.6	High level input current	MFIRST = 0 $V^{(1)}$ = 1V to 2V	(1)	$I^{(1)}$	–1		+1	µA	A

*) Type means: A = 100% tested, B = 100% correlation tested, C = Characterized on samples, D = Design parameter

Note: 1. CS_N, SCK, MOSI, CLK

7.6.5.3 Test-mode Pins

The test-mode pins DTST, ATST, PWTST (outputs) have to be kept open in the application. The test-mode pins SCANMODE and CS_FUSE (inputs) have to be connected to VSSA. These inputs have an internal pull-down resistor. The test-mode pin VDDFUSE is a supply pin. It must also be connected to VSSA.

Table 7-23. Input Characteristics Pins SCANMODE, CS_FUSE, VDDFUSE

No.	Parameters	Test Conditions	Pin	Symbol	Min.	Typ.	Max.	Unit	Type*
18.1	Pull-down resistor		SCANMODE, CS_FUSE	$R_{SCANMODE}$, R_{CS_FUSE}	50		200	kΩ	A

*) Type means: A = 100% tested, B = 100% correlation tested, C = Characterized on samples, D = Design parameter

7.7 Operations

7.7.1 Voltage and Temperature Measurement

At startup, the Atmel® ATA6870 is supplied and is waiting for any operation request.

The available operations are:

- 6 channels voltage acquisition with a temperature acquisition
  - with voltage = V($MBAT_{i+1}$, $MBAT_i$) (standard operation)
    and with voltage = V(TEMP1 or TEMP2, TEMPVSS) (standard operation)
  - with voltage = V($MBAT_i$, $MBAT_i$) (offset calibration: CalOffset operation)
    and with voltage = V(TEMPVSS, TEMPVSS) (offset calibration: CalOffset operation)

Operation completion is flagged to the host MCU via the IRQ output in conjunction with dataRdy bit set in the status register. In order to retrieve the full results in a single access, the user has to access the dataRd16burst register (112bits). Getting the results of a single channel (voltage or temperature) is also possible. For this, first select the channel to read through the ChannelReadSel register, then retrieve the channel value through the DataRd16 register. It is not possible to order a new operation until the previous operation has been acknowledged. The host MCU acknowledges the interrupt by reading the status register. This resets the dataRdy bit as well as the IRQ output, and enables the ATA6870 to start the next operation. Writing NoOp in the Operation register during an operation running aborts the current operation. In this case, the dataRdy bit is not set and interrupt is not requested to the host MCU. The Opstatus register flags whether operation is running, aborted, ended, or no operation is running.

7.7.2 Discharge Function

Each channel is independently dischargeable. Discharge is activated or deactivated by the register ChannelDischSel.

7.7.3 Low Frequency Timer Function

A low frequency timer (LFT), synchronous to internal 50 kHz oscillator provides the host MCU with a low power timer, which useful to either synchronize operations in the host MCU or monitor the Atmel® ATA6870's activity.

The LFT elapsing asserts an interrupt to the host MCU if the corresponding mask bit in the IrqMask register is not set.

Default is LFT not enabled. To enable the LFT, set the LFTimer_ena bit to 1 in the Ctrl register.

LFT counting time is fully programmable in the register LFTimer.

Changing the LFTimer register restarts the LFT if the new counting time is smaller than the current value of the LFT. Otherwise, LFT runs until it reaches the new end value.

Asserting LFTRst bit in the Rstr register resets and restarts the LFT if the LFT is enabled. Otherwise, LFT is reset but not started.

Each ATA6870 will assert its own interrupt when the timer elapses. Depending on how the timer is used, the host MCU may mask LFTdone interrupts in the whole ATA6870s chain, except the first one. As internal RC oscillators are not synchronized, this prevents the MCU from being interrupted each time one of the LFT elapses.

7.7.4 Undervoltage Detection

A programmable undervoltage detection function is embedded in the ATA6870. After being digitalized, each of the 6 voltages is compared to a programmable threshold defined in the UdvThresh register. If one of the six channels is out of the range defined by the threshold, an interrupt is requested to the host MCU if the corresponding udv mask bit is not set in the IrqMask register.

The default threshold is 1.5V.

As soon as MCU has acknowledged, undervoltage information is no more available to MCU, because status register is cleared when MCU reads it out. As a consequence, the next undervoltage interrupt cannot occur until the Atmel ATA6870 leaves its current undervoltage state.

7.8 Registers

Registers are read and written through the SPI interface.

Table 7-24. Register Mapping

Register Address	Control Field Read Mode	Control Field Write Mode	Register Name	Access	Type	Function
0x00	0x00	-	RevID	R	8 bits	Revision ID/value Mfirst, pow_on
0x01	0x02	0x03	Ctrl	RW	8 bits	Control Register
0x02	0x04	0x05	Operation	RW	8 bits	Operation request
0x03	0x06	-	OpStatus	R	8 bits	Operation status
0x04	-	0x09	Rstr	W	8 bits	Software reset
0x05	0x0A	0x0B	IrqMask	RW	8 bits	Mask interrupt sources
0x06	0x0C	-	Status	R	8 bits	Status interrupt sources
0x08	0x10	-	ChannelUdvStatus	R	8 bits	Channels undervoltage status
0x09	0x12	0x13	ChannelDischSel	RW	8 bits	Select channel to discharge
0x0A	0x14	0x15	ChannelReadSel	RW	8 bits	Select channel to read
0x0B	0x16	0x17	LFTimer	RW	8 bits	Low Frequency Timer control
0x0C	0x18	-	CalibStatus	R	8 bits	Reserved
0x0D	0x1A	0x1B	FuseCtrl	RW	8 bits	Reserved
0x10	0x20	0x21	UdvThresh	RW	16 bits	Undervoltage detection threshold
0x11	0x22	-	DataRd16	R	16 bits	Single access to selected channel value
0x12	0x24	0x25	ATA6870Test	RW	16 bits	Reserved
0x7F	0xFE	-	DataRd16Burst	R	112 bits	Burst Access to the whole channels (6 voltage and 1 temperature)

7.8.1 Registers Content

7.8.1.1 RevID Register

Table 7-25. RevId Register Overview

Register		RevID					
Address		0x00			Reset Value		0x02
7 (msb)	6	5	4	3	2	1	0 (lsb)
x	x	x	pow_en	Mfirst	RevID		

Table 7-26. RevId Register Content

Bit Field	Description
RevID	ATA6870 revision number, revision B: 0x02
Mfirst	Status input pin MFIRST
pow_en	Status input pin POW_EN

7.8.1.2 Ctrl Register

Table 7-27. Ctrl Register Overview

Register		Ctrl					
Address		0x01			Reset Value		0x00
7 (msb)	6	5	4	3	2	1	0 (lsb)
x	x	x	Chksum_ena	LFTimer_ena	TFMODE_ena	x	x

Table 7-28. Ctrl Register Content

Bit Field	Description
TFMode_ena	0: Prevent ATA6870 to switch to test mode 1: Not allowed for customer use
LFTimer_ena	0: Disable internal Low Frequency Timer 1: Enable internal Low Frequency Timer
Chksum_ena	0: Disable SPI transaction checksum computation/check 1: Enable SPI transaction checksum computation/check

7.8.1.3 Operation Register

Table 7-29. Operation Register Overview

Register		Operation					
Address		0x02			Reset Value		0x02
7 (msb)	6	5	4	3	2	1	0 (lsb)
x	x	OpMode		TempMode	VoltMode		OpRqst

Table 7-30. Operation Register Content

Bit Field	Description
OpRqst	0: NoOp: No Operation, or abort current operation 1: AcqRqst: Start the analog to digital conversion An interrupt is generated when data is available in DataRd16/DataRd16Burst.
VoltMode	00: Caloffset: select V(MBAT(i), MBAT(i)) as input of voltage channels. (offset calibration) 01: AcqV: select V(MBAT(i+1), MBAT(i)) as input of voltage channels (default) 10: Not allowed
TempMode	0: Select TEMP1 input pin as input of temperature channel 1: Select TEMP2 input pin as input of temperature channel
OpMode	00: 6 voltage channels and temperature acquisition 01: 6 voltage channels acquisition only 1X: Temperature acquisition only

When a conversion operation is finished and the interrupt has been acknowledged by the MCU the Operation register is automatically reset to “NoOp”. Writing “NoOp” in the register when conversion operation is running, aborts the current operation. Other changes are not accepted during any operation.

Figure 7-28. Typical Data Acquisition Flow

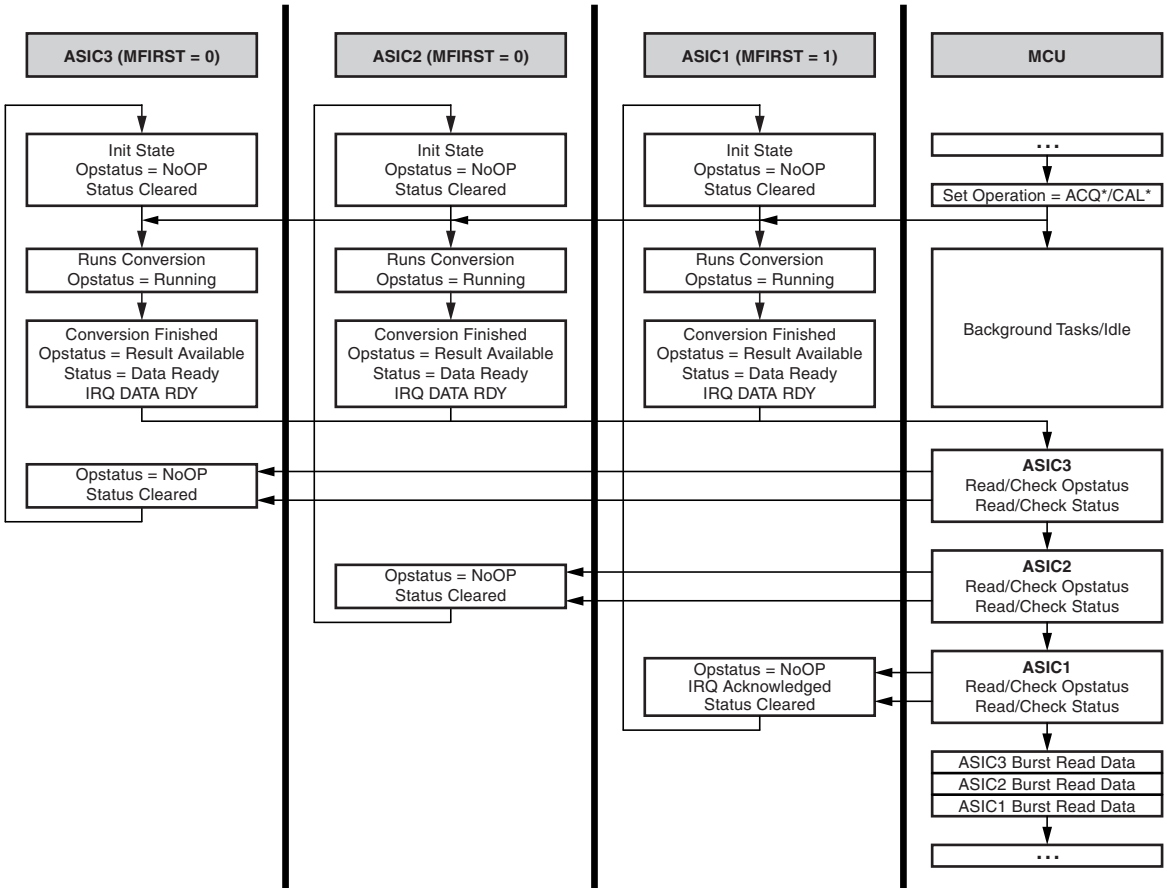

7.8.1.4 OpStatus Register

Table 7-31. OpStatus Register Overview

Register		OpStatus					
Address		0x03			Reset Value		0x00
7 (msb)	6	5	4	3	2	1	0 (lsb)
x	x	x	x	x	x	OpStatus	

Table 7-32. OpStatus Register Content

Bit Field	Description
OpStatus	00: No Operation 01: Operation is ongoing 10: Operation is finished, result is available 11: Operation is cancelled, result is not available

Figure 7-29. Operation Status Register Management

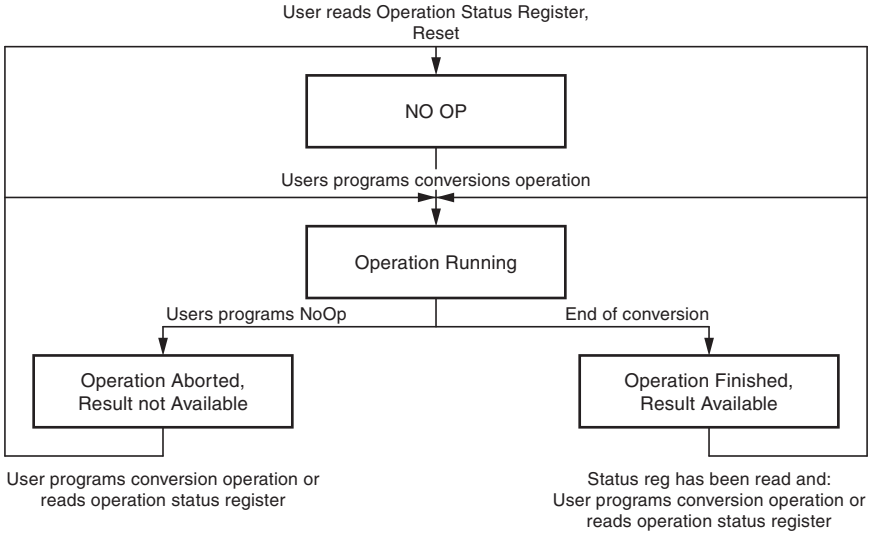

The OPStatus register is reset when read after a completed or aborted operation. Reading the register before starting an operation is not mandatory. Reading data conversion results or reading the OpStatus Register during an operation does not affect the OpStatus register.

7.8.1.5 Rstr Register

Table 7-33. Rstr Register Overview

Register		Rstr					
Address		0x04			Reset Value		0x00
7 (msb)	6	5	4	3	2	1	0 (lsb)
x	x	x	x	x	x	LFTRst	0

Table 7-34. Rstr Register Content

Bit Field	Description
LFTRst	0: No reset 1: Low Frequency Timer software reset

LFTRst resets and restarts the low frequency timer if not disabled (LFTimer_ena = 0).

7.8.1.6 IrqMask Register

Table 7-35. IrqMask Register Overview

Register		IrqMask					
Address		0x05			Reset Value		0x00
7 (msb)	6	5	4	3	2	1	0 (lsb)
x	x	x	chkErrorMask	udvmask	commErrorMask	LFTdoneMask	dataDryMask

Table 7-36. IrqMask Register Content

Bit Field	Description
dataRdyMask	Mask data ready interrupt when set to 1
WakeupMask	Mask LFTdone interrupt when set to 1
commErrorMask	Mask commError interrupt when set to 1
udvMask	Mask undervoltage detection interrupt when set to 1
chkErrorMask	Mask checksum error interrupt when set to 1

7.8.1.7 Status Register

Table 7-37. Status Register Overview

Register		Status					
Address		0x06			Reset Value		0x20
7 (msb)	6	5	4	3	2	1	0 (lsb)
x	TFMdeOn	por	chkError	udv	commError	LFTdone	dataRdy

Table 7-38. Status Register Content

Bit Field	Description
dataRdy	Conversion finished
LFTdone	Low frequency timer elapsed
commError	Bad SPI command detected (wrong length)
udv	Undervoltage detected
chkError	Error on checksum check
Por	Power on reset detected
TFMdeOn	Test mode on

Any bit among {dataRdy, LFTdone, commError, udv, chkError} set in the status register requests an interrupt to the external MCU if the corresponding mask bit in the IrqMask register is 0. Reading the status register acknowledges the interrupt and resets its content. Por and TFMdeOn cause no interrupt.

7.8.1.8 ChannelUdvStatus Register

Table 7-39. ChannelUdvStatus Register Overview

Register		ChannelUdvStatus					
Address		0x08			Reset Value		0x00
7 (msb)	6	5	4	3	2	1	0 (lsb)
x	x	chUdv6_stat	chUdv5_stat	chUdv4_stat	chUdv3_stat	chUdv2_stat	chUdv1_stat

Table 7-40. ChannelUdvStatus Register Content

Bit Field	Description
chUdv1_stat	1: Undervoltage detected on channel 1 0: No undervoltage detected on channel 1
chUdv2_stat	1: Undervoltage detected on channel 2 0: No undervoltage detected on channel 2
chUdv3_stat	1: Undervoltage detected on channel 3 0: No undervoltage detected on channel 3
chUdv4_stat	1: Undervoltage detected on channel 4 0: No undervoltage detected on channel 4
chUdv5_stat	1: Undervoltage detected on channel 5 0: No undervoltage detected on channel 5
chUdv6_stat	1: Undervoltage detected on channel 6 0: No undervoltage detected on channel 6

Undervoltage is detected when voltage decreases under the threshold value defined in udvThresh register.

When undervoltage is detected on a channel, the Atmel® ATA6870 requests an interrupt if the UDVmask bit in the IRQMask register is 0.

7.8.1.9 ChannelDischSel Register

Table 7-41. ChannelDischSel Register Overview

Register		ChannelDischSel					
Address		0x09			Reset Value	0x00	
7 (msb)	6	5	4	3	2	1	0 (lsb)
x	x	chV6_disch	chV5_disch	chV4_disch	chV3_disch	chV2_disch	chV1_disch

Table 7-42. ChannelDischSel Register Content

Bit Field	Description
chV1_disch	1: Enable voltage channel 1 discharge 0: Disable voltage channel 1 discharge
chV2_disch	1: Enable voltage channel 2 discharge 0: Disable voltage channel 2 discharge
chV3_disch	1: Enable voltage channel 3 discharge 0: Disable voltage channel 3 discharge
chV4_disch	1: Enable voltage channel 4 discharge 0: Disable voltage channel 4 discharge
chV5_disch	1: Enable voltage channel 5 discharge 0: Disable voltage channel 5 discharge
chV6_disch	1: Enable voltage channel 6 discharge 0: Disable voltage channel 6 discharge

The channels are dischargeable simultaneously.

7.8.1.10 ChannelReadSel Register

Table 7-43. ChannelReadSel Register Overview

Register		ChannelReadSel					
Address		0x0A			Reset Value		0x00
7 (msb)	6	5	4	3	2	1	0 (lsb)
					ChannelReadSel		

Table 7-44. ChannelReadSel Register Content

Bit Field	Description
ChannelReadSel	111: Value of the LFT is returned in DataRd16 register 110: Temperature channel available in DataRd16 register 101: Voltage channel6, value available in DataRd16 register 100: Voltage channel5, value available in DataRd16 register 011: Voltage channel4, value available in DataRd16 register 010: Voltage channel3, value available in DataRd16 register 001: Voltage channel2, value available in DataRd16 register 000: Voltage channel1, value available in DataRd16 register

This register can be used to quickly read a single channel without using a full burst access. The value of the selected channel will be available in the DataRd16 register. The value will always be updated by writing a channel address to the ChannelReadSel register. Data in this register is not valid during ongoing data conversion.

7.8.1.11 LFTimer Register

Table 7-45. LFTimer Register Overview

Register		LFTimer					
Address		0x0B			Reset Value		0xF9
7 (msb)	6	5	4	3	2	1	0 (lsb)
LFTPrescaler	LFTDelay						

Table 7-46. LFTimer Register Content

Bit Field	Description
LFTDelay	Contains the present Low Frequency Timer delay value
LFTPrescaler	0: PrescalerValue = 1 1: PrescalerValue = 6

The default timer value is 59.965s (0xF9) for f_{OSC} = 50kHz.

Figure 7-30. Block Diagram LFTimer

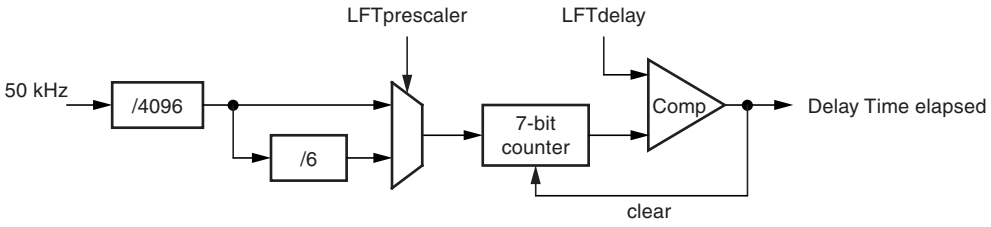

Formula for Delay Time calculation:

$$\text{Delay Time} = \frac{1}{T_{OSC}[\text{Hz}]} \times 4096 \times (6^{\text{LFTprescaler}_D}) \times (\text{LFTdelay}_D + 1)$$

The LFT can be programmed to the following values (f_{OSC} = 50kHz):

LFTprescaler = 0: 0.082s <= duration <= 10.486s, Increment = 82ms
LFTprescaler = 1: 492 ms <= duration <= 62.915s, Increment = 492ms

When LFT elapsed, an interrupt is requested unless LFTdoneMask bit is set in the IRQMask register.

For details on the tolerances for the oscillator, see Section 7.5.6 “RC Oscillator” on page 25.

Keeping at list 100 µs between two successive LFTimer register write accesses prevents internal metastability issues, which might result in bad LFTdelay decoding.

7.8.1.12 Test-Mode Register

Table 7-47. Test-Mode Register 1 Overview

Register		TESTmode1					
Address		0x0C			Reset Value		0x03
7 (msb)	6	5	4	3	2	1	0 (lsb)
0	0	0	0	0	0	1	1

Table 7-48. Test-Mode Register 2 Overview

Register		TESTmode2					
Address		0x0D			Reset Value		0x07
7 (msb)	6	5	4	3	2	1	0 (lsb)
0	0	0	0	0	1	1	1

Table 7-49. Test-Mode Register 3 Overview

Register				UdvThresh											
Address				0x12						Reset value			0x0E00		
15	14	13	12	11	10	9	8	7	6	5	4	3	2	1	0
0	0	0	0	0	1	1	1	1	0	0	0	0	0	0	0

Test-Mode registers 1, 2, and 3 are reserved for the factory calibration process. They are not allowed for customer use.

7.8.1.13 UdvThresh Register

Table 7-50. UdvThresh Register Overview

Register				UdvThresh											
Address				0x10						Reset value			0x0570		
15	14	13	12	11	10	9	8	7	6	5	4	3	2	1	0
x	x	x	x	udvThresh											

Table 7-51. UdvThresh Register Content

Bit Field	Format	Description
udvThresh	12 bits	Threshold for undervoltage detection

Default value is 1.5V (0x0570, 1392_D)

1.5V = VREF × (1392 – 410) / (1502 – 410)

See also Section 7.5.1.2 “12 Bits Incremental ADC” on page 19.

7.8.1.14 DataRd16 Register

Table 7-52. DataRd16 Register Overview

Register				DataRd16											
Address				0x11						Reset value			0x0000		
15	14	13	12	11	10	9	8	7	6	5	4	3	2	1	0
x	x	x	x	DataRd16											

Table 7-53. DataRd16 Register Content

Bit Field	Format	Description
DataRd16	12 bits	Return selected channel value (see Section 7.8.1.10 “ChannelReadSel Register” on page 44)

7.8.1.15 DataRd16burst Register

Table 7-54. DataRd16burst Register Overview

Register				DataRd16Burst											
Address				0x7F						Reset value			0x0000		
111	110	109	108	107	106	105	104	103	102	101	100	99	98	97	96
X	X	X	x	Channel6 data											
95	94	93	92	91	90	89	88	87	86	85	84	83	82	81	80
x	x	x	x	Channel5 data											
79	78	77	76	75	74	73	72	71	70	69	68	67	66	65	64
x	x	x	x	Channel4 data											
63	62	61	60	59	58	57	56	55	54	53	52	51	50	49	48
x	x	x	x	Channel3 data											
47	46	45	44	43	42	41	40	39	38	37	36	35	34	33	32
x	x	x	x	Channel2 data											
31	30	29	28	27	26	25	24	23	22	21	20	19	18	17	16
x	x	x	x	Channel1 data											
15	14	13	12	11	10	9	8	7	6	5	4	3	2	1	0
x	x	x	x	Temperature data											

Table 7-55. DataRd16burst Register Content

Bit Field	Format	Description
DataRd16burst	112bits	Returns the values of all channels from one ATA6870, including temperature measurement

Figure 7-31. Application

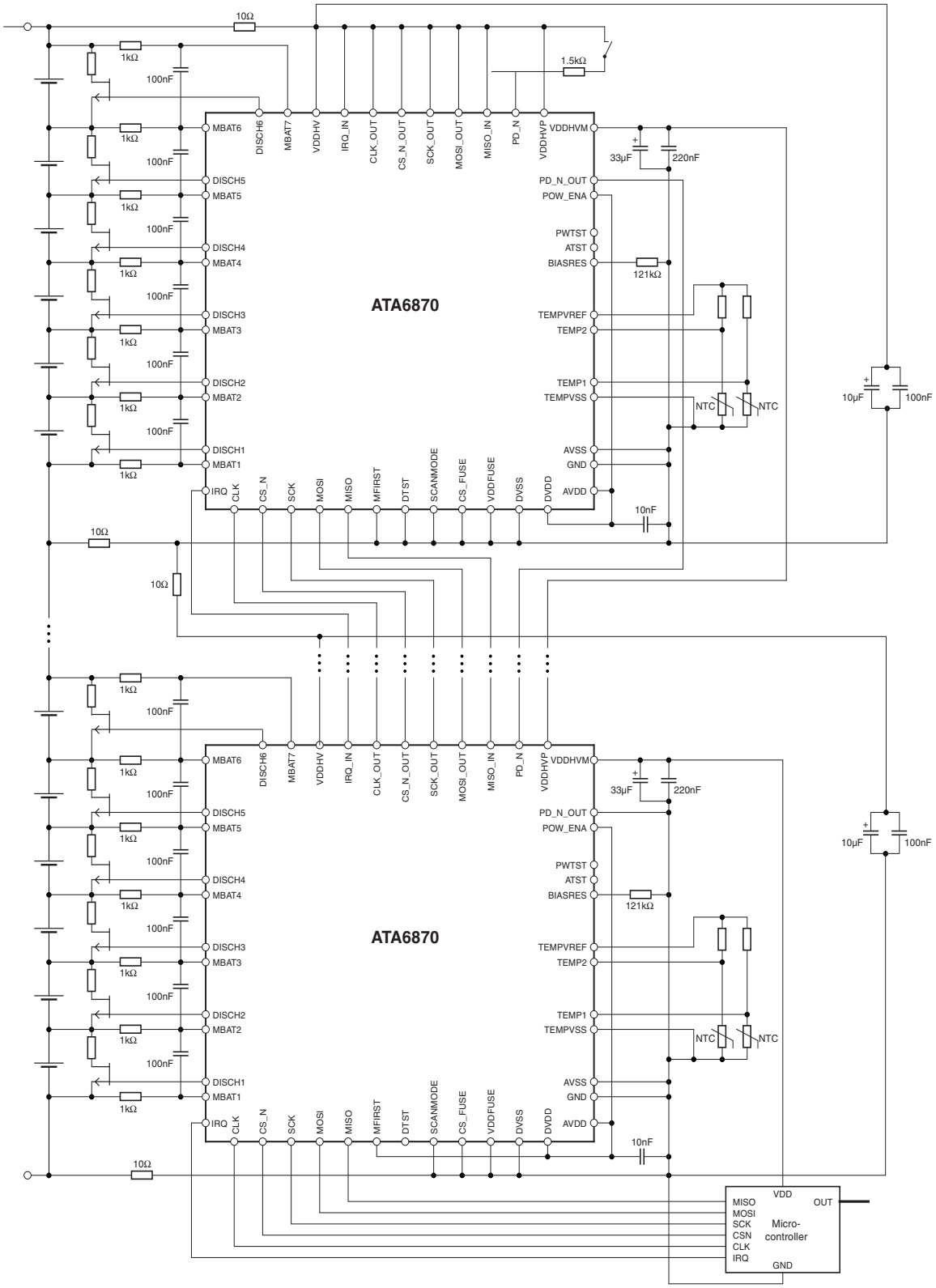

Figure 7-31 shows an application with 2 stacked Atmel® ATA6870s.

8. Ordering Information

Extended Type Number	Package	MOQ
ATA6870-PLPW	QFN48, 7 × 7	1,000 pieces
ATA6870-PLQW	QFN48, 7 × 7	4,000 pieces

9. Package Information

Package: VQFN_7 x 7_48L
Exposed pad 5.6 x 5.6
Dimensions in mm

Not indicated tolerances ±0.05

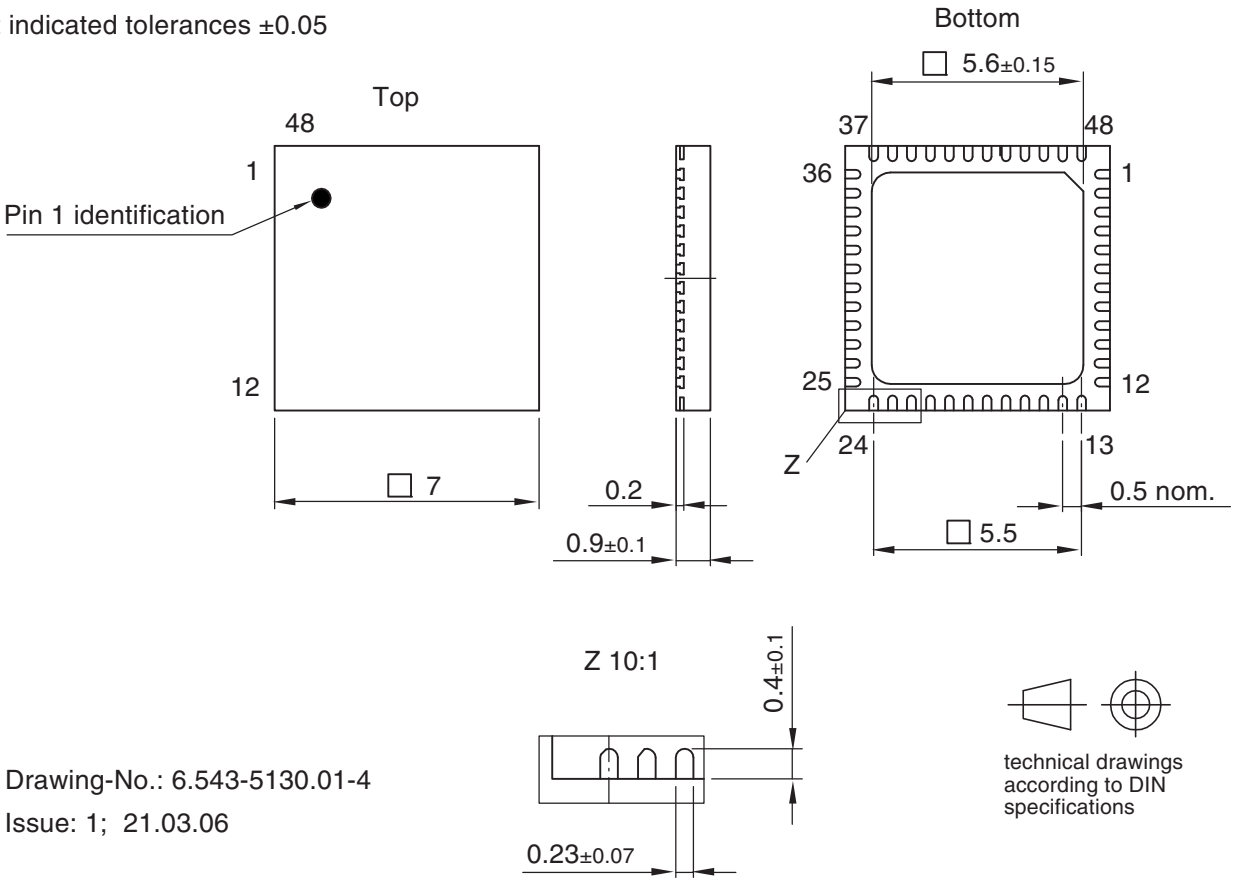

Drawing-No.: 6.543-5130.01-4

Issue: 1; 21.03.06

9.1 Markings

As a minimum, the devices will be marked with the following:

- Date code (year and week number)
- Atmel® part number (ATA6870)

10. Revision History

Please note that the following page numbers referred to in this section refer to the specific revision mentioned, not to this document.

Revision No.	History
9116E-AUTO-07/12	• Section 7.6.4.6 “Communication Error” on page 33 changed
9116D-AUTO-03/11	• Section 7.5.1.2 “12-bits Incremental ADC” on pages 19 to 20 changed
9116C-AUTO-11/10	• Figure 7-1 “Power-down” on page 10 changed. • Figure 7-7 “Block Diagram Battery Voltage Measurement” on page 18 changed • Table 7-6 “Inputs of the Multiplexer” on page 18 changed • ADC adjustment + procedure on pages 19 to 21 changed: - Section 7.5.1.2 “12 Bits Incremental ADC” on pages 19 to 21 changed • Table 7-11 “Electrical Characteristics” number 7.5 on page 23 changed • Section 7.7.1 “Voltage and Temperature Measurement” on page 38 changed • Table 7-32 “Operation Register Content” on page 42 changed • Figure 7-31 “Application” on page 52 changed
9116B-AUTO-10/09	• Table 3-1 “Pin Description” on page 4 changed • Table 5 “Abs.Max.RAtings” changed • Table 7-1 “Electrical Characteristics” on page 11 changed • Table 7-5 “Electrical Characteristics” on page 16 changed • Table 7-7 “Electrical Characteristics” on page 19 changed • Table 7-9 on page 21 changed • Table 7-11 “Battery Cell Temperature Measuring Characteristics” on page 23 changed • Table 7-12 “Battery Cell Temperature Measuring Characteristics” on page 24 changed • Section 7.5.7 “Power On Reset” on page 25 changed • Table 7.15 “Battery Cell Temperature Measuring Characteristics” on page 25 changed • Figure 7-13 “Host Interface” on page 26 changed • Figure 7-14 “SPI Transaction Field Organization” on page 28 changed • Section 7.6.4.7 “CHKSUM Field” on page 34 changed • Table 7-19 “Electrical Characteristics” on page 35 changed • Table 7-22 “Electrical Characteristics” on page 37 changed • Table 7-23 “Electrical Characteristics” on page 37 changed • Table 7-26 “Register Mapping” on page 40 changed • Table 7-32 “Operation Register Content” on page 42 changed • Section 7.8.1.5 “Rstr Register” on page 44 changed • Table 7.55 “DataRd16burst Register Overview” on page 51 changed • Figure 7-31 “Application” on page 52 changed

Enabling Unlimited Possibilities™

Atmel Corporation
2325 Orchard Parkway
San Jose, CA 95131
USA
Tel: (+1) (408) 441-0311
Fax: (+1) (408) 487-2600
www.atmel.com

Atmel Asia Limited
Unit 01-5 & 16, 19F
BEA Tower, Millennium City 5
418 Kwun Tong Roa
Kwun Tong, Kowloon
HONG KONG
Tel: (+852) 2245-6100
Fax: (+852) 2722-1369

Atmel Munich GmbH
Business Campus
Parkring 4
D-85748 Garching b. Munich
GERMANY
Tel: (+49) 89-31970-0
Fax: (+49) 89-3194621

Atmel Japan G.K.
16F Shin-Osaki Kangyo Building
1-6-4 Osaki
Shinagawa-ku, Tokyo 141-0032
JAPAN
Tel: (+81) (3) 6417-0300
Fax: (+81) (3) 6417-0370

© 2012 Atmel Corporation. All rights reserved. / Rev.: 9116E–AUTO–07/12

Atmel®, Atmel logo and combinations thereof, Enabling Unlimited Possibilities®, and others are registered trademarks or trademarks of Atmel Corporation or its subsidiaries. Other terms and product names may be trademarks of others.

Disclaimer: The information in this document is provided in connection with Atmel products. No license, express or implied, by estoppel or otherwise, to any intellectual property right is granted by this document or in connection with the sale of Atmel products. EXCEPT AS SET FORTH IN THE ATMEL TERMS AND CONDITIONS OF SALES LOCATED ON THE ATMEL WEBSITE, ATMEL ASSUMES NO LIABILITY WHATSOEVER AND DISCLAIMS ANY EXPRESS, IMPLIED OR STATUTORY WARRANTY RELATING TO ITS PRODUCTS INCLUDING, BUT NOT LIMITED TO, THE IMPLIED WARRANTY OF MERCHANTABILITY, FITNESS FOR A PARTICULAR PURPOSE, OR NON-INFRINGEMENT. IN NO EVENT SHALL ATMEL BE LIABLE FOR ANY DIRECT, INDIRECT, CONSEQUENTIAL, PUNITIVE, SPECIAL OR INCIDENTAL DAMAGES (INCLUDING, WITHOUT LIMITATION, DAMAGES FOR LOSS AND PROFITS, BUSINESS INTERRUPTION, OR LOSS OF INFORMATION) ARISING OUT OF THE USE OR INABILITY TO USE THIS DOCUMENT, EVEN IF ATMEL HAS BEEN ADVISED OF THE POSSIBILITY OF SUCH DAMAGES. Atmel makes no representations or warranties with respect to the accuracy or completeness of the contents of this document and reserves the right to make changes to specifications and products descriptions at any time without notice. Atmel does not make any commitment to update the information contained herein. Unless specifically provided otherwise, Atmel products are not suitable for, and shall not be used in, automotive applications. Atmel products are not intended, authorized, or warranted for use as components in applications intended to support or sustain life.