SAM D21/DA1 Family

Low-Power, 32-bit Cortex-M0+ MCU with Advanced Analog and PWM

Features

- Processor
  - Arm® Cortex®-M0+ CPU running at up to 48 MHz
    - Single-cycle hardware multiplier
    - Micro Trace Buffer (MTB)
- Memories
  - 4/2/1/0.5 KB Read-While-Write (RWWEE) Flash section (not available on 256 KB devices)
  - 256/128/64/32/16 KB in-system self-programmable Flash
  - 32/16/8/4 KB SRAM Memory
- System
  - Power-on Reset (POR) and Brown-out Detection (BOD)
  - Internal and external clock options with 48 MHz Digital Frequency-Locked Loop (DFLL48M) and 48 MHz to 96 MHz Fractional Digital Phase-Locked Loop (FDPLL96M)
  - External Interrupt Controller (EIC)
  - 16 external interrupts
  - One Non-maskable Interrupt (NMI)
  - Two-pin Serial Wire Debug (SWD) programming, test and debugging interface
- Low Power
  - Idle and Standby Sleep modes
  - SleepWalking peripherals
- Peripherals
  - 12-channel Direct Memory Access Controller (DMAC)
  - 12-channel Event System
  - Up to five 16-bit Timer/Counters (TC), configurable as either:
    - One 16-bit TC with two compare/capture channels
    - One 8-bit TC with two compare/capture channels
    - One 32-bit TC with two compare/capture channels, by using two TCs
  - Up to four 24-bit Timer/Counters for Control (TCC), with extended functions:
    - Up to four compare channels with optional complementary output
    - Generation of synchronized pulse width modulation (PWM) pattern across port pins
    - Deterministic fault protection, fast decay and configurable dead-time between complementary output
    - Dithering that increase resolution with up to 5 bit and reduce quantization error
  - PWM Channels using TC and TCC peripherals:
    - Up to eight PWM channels on each 24-bit TCC
    - Up to two PWM channels on each 16-bit TCC
    - Up to two PWM channels on each 16-bit TC
  - 32-bit Real Time Counter (RTC) with clock/calendar function
  - Watchdog Timer (WDT)
  - CRC-32 generator

© 2021 Microchip Technology Inc. and its subsidiaries

Downloaded from Arrow.com.

  - One full-speed (12 Mbps) Universal Serial Bus (USB) 2.0 interface
    - Embedded host and device function
    - Eight endpoints
  - Up to six Serial Communication Interfaces (SERCOM), each configurable to operate as either:
    - USART with full-duplex and single-wire half-duplex configuration
    - I^2C up to 3.4 MHz
    - SPI
    - LIN client
  - One two-channel Inter-IC Sound (I^2S) interface
  - One 12-bit, 350ksps Analog-to-Digital Converter (ADC) with up to 20 channels
    - Differential and single-ended input
    - 1/2x to 16x programmable gain stage
    - Automatic offset and gain error compensation
    - Oversampling and decimation in hardware to support 13-, 14-, 15- or 16-bit resolution
  - 10-bit, 350 ksps Digital-to-Analog Converter (DAC)
  - Up to four Analog Comparators (AC) with Window Compare function
  - Peripheral Touch Controller (PTC)
    - Up to 256-Channel capacitive touch and proximity sensing
- I/O
  - Up to 52 programmable I/O pins
- Qualification
  - SAM D21 AEC-Q100 Grade 1 (-40°C to 125°C)
  - SAM DA1 AEC-Q100 Grade 2 (-40C to 105C)
- Drop-in compatible with SAM D20
- Packages
  - 64-pin TQFP, QFN, UFBGA
  - 48-pin TQFP, QFN
  - 45-pin WLCSP
  - 35-pin WLCSP
  - 32-pin TQFP, QFN
- Operating Voltage
  - SAM D21: 1.62V – 3.63V
  - SAM DA1: 2.7V - 3.63V

© 2021 Microchip Technology Inc. and its subsidiaries

Downloaded from Arrow.com.

Table of Contents

Features ... 1

1. Description ... 13
2. Configuration Summary ... 14
3. SAM D21 Ordering Information[1] ... 16
   - 3.1. SAM DA1 Ordering Information ... 17
4. Block Diagram ... 18
5. Pinout ... 19
   - 5.1. SAM D21J and SAM DA1J ... 19
   - 5.2. SAM D21GxxA/B/D and SAM DA1GxxA/B ... 21
   - 5.3. SAM D21GxxA ... 22
   - 5.4. SAM D21GxxL ... 23
   - 5.5. SAM D21ExxA/B/D and SAM DA1ExxA/B ... 24
   - 5.6. SAM D21ExxB/C/D ... 25
   - 5.7. SAM D21ExxL ... 26
6. Signal Descriptions List ... 27
7. I/O Multiplexing and Considerations ... 29
   - 7.1. Multiplexed Signals ... 29
   - 7.2. Other Functions ... 32
8. Power Supply and Start-Up Considerations ... 35
   - 8.1. Power Domain Overview ... 35
   - 8.2. Power Supply Considerations ... 35
   - 8.3. Power-Up ... 37
   - 8.4. Power-On Reset and Brown-Out Detector ... 37
9. Product Mapping ... 39
10. Memories ... 41
    - 10.1. Embedded Memories ... 41
    - 10.2. Physical Memory Map ... 41
    - 10.3. NVM Calibration and Auxiliary Space ... 42
11. Processor And Architecture ... 46
    - 11.1. Cortex M0+ Processor ... 46
    - 11.2. Nested Vector Interrupt Controller ... 47
    - 11.3. Micro Trace Buffer ... 49
    - 11.4. High-Speed Bus System ... 49
    - 11.5. AHB-APB Bridge ... 51
    - 11.6. Peripheral Access Controller (PAC) ... 52
    - 11.7. Register Access and Behavior ... 65
12. Peripherals Configuration Summary ... 66

Downloaded from Arrow.com.

13. DSU - Device Service Unit....68
13.1. Overview....68
13.2. Features....68
13.3. Block Diagram....68
13.4. Signal Description....69
13.5. Product Dependencies....69
13.6. Debug Operation....70
13.7. Chip Erase....71
13.8. Programming....72
13.9. Intellectual Property Protection....72
13.10. Device Identification....73
13.11. Functional Description....74
13.12. Register Summary....79
13.13. Register Description....80

14. Clock System....103
14.1. Clock Distribution....103
14.2. Synchronous and Asynchronous Clocks....104
14.3. Register Synchronization....104
14.4. Enabling a Peripheral....108
14.5. Disabling a Peripheral....108
14.6. On-demand, Clock Requests....109
14.7. Power Consumption vs. Speed....109
14.8. Clocks after Reset....109

15. GCLK - Generic Clock Controller....111
15.1. Overview....111
15.2. Features....111
15.3. Block Diagram....111
15.4. Signal Description....112
15.5. Product Dependencies....112
15.6. Functional Description....113
15.7. Register Summary....119
15.8. Register Description....119

16. PM – Power Manager....130
16.1. Overview....130
16.2. Features....130
16.3. Block Diagram....131
16.4. Signal Description....131
16.5. Product Dependencies....131
16.6. Functional Description....133
16.7. Register Summary....139
16.8. Register Description....139

17. SYSCTRL – System Controller....158
17.1. Overview....158
17.2. Features....158

Downloaded from Arrow.com.

17.3. Block Diagram....159
17.4. Signal Description....159
17.5. Product Dependencies....160
17.6. Functional Description....161
17.7. Register Summary....175
17.8. Register Description....176

18. WDT – Watchdog Timer....211
18.1. Overview....211
18.2. Features....211
18.3. Block Diagram....211
18.4. Signal Description....212
18.5. Product Dependencies....212
18.6. Functional Description....213
18.7. Register Summary....218
18.8. Register Description....218

19. RTC – Real-Time Counter....227
19.1. Overview....227
19.2. Features....227
19.3. Block Diagram....227
19.4. Signal Description....228
19.5. Product Dependencies....228
19.6. Functional Description....230
19.7. Register Summary....234
19.8. Register Description....236

20. DMAC – Direct Memory Access Controller....268
20.1. Overview....268
20.2. Features....268
20.3. Block Diagram....269
20.4. Signal Description....270
20.5. Product Dependencies....270
20.6. Functional Description....271
20.7. Register Summary....289
20.8. Register Description....290
20.9. Register Summary - SRAM....317
20.10. Register Description - SRAM....317

21. EIC – External Interrupt Controller....324
21.1. Overview....324
21.2. Features....324
21.3. Block Diagram....324
21.4. Signal Description....324
21.5. Product Dependencies....325
21.6. Functional Description....326
21.7. Register Summary....330
21.8. Register Description....330

Downloaded from Arrow.com.

22. Nonvolatile Memory Controller (NVMCTRL)....341
22.1. Overview....341
22.2. Features....341
22.3. Block Diagram....341
22.4. Signal Description....342
22.5. Product Dependencies....342
22.6. Functional Description....343
22.7. Register Summary....350
22.8. Register Description....350

23. PORT - I/O Pin Controller....363
23.1. Overview....363
23.2. Features....363
23.3. Block Diagram....364
23.4. Signal Description....364
23.5. Product Dependencies....364
23.6. Functional Description....366
23.7. Register Summary....371
23.8. Register Description....372

24. EVSYS – Event System....388
24.1. Overview....388
24.2. Features....388
24.3. Block Diagram....388
24.4. Signal Description....388
24.5. Product Dependencies....389
24.6. Functional Description....390
24.7. Register Summary....394
24.8. Register Description....395

25. SERCOM – Serial Communication Interface....408
25.1. Overview....408
25.2. Features....408
25.3. Block Diagram....409
25.4. Signal Description....409
25.5. Product Dependencies....409
25.6. Functional Description....411

26. SERCOM USART....416
26.1. Overview....416
26.2. USART Features....416
26.3. Block Diagram....417
26.4. Signal Description....417
26.5. Product Dependencies....417
26.6. Functional Description....419
26.7. Register Summary....430
26.8. Register Description....430

27. SERCOM SPI – SERCOM Serial Peripheral Interface....448

Downloaded from Arrow.com.

27.1. Overview ... 448
27.2. Features ... 448
27.3. Block Diagram ... 449
27.4. Signal Description ... 449
27.5. Product Dependencies ... 449
27.6. Functional Description ... 451
27.7. Register Summary ... 459
27.8. Register Description ... 459

28. SERCOM I2C – Inter-Integrated Circuit ... 475
28.1. Overview ... 475
28.2. Features ... 475
28.3. Block Diagram ... 476
28.4. Signal Description ... 476
28.5. Product Dependencies ... 476
28.6. Functional Description ... 478
28.7. Register Summary - I2C Client ... 494
28.8. Register Description - I2C Client ... 494
28.9. Register Summary - I2C Host ... 507
28.10. Register Description - I2C Host ... 507

29. I2S - Inter-IC Sound Controller ... 525
29.1. Overview ... 525
29.2. Features ... 525
29.3. Block Diagram ... 526
29.4. Signal Description ... 526
29.5. Product Dependencies ... 527
29.6. Functional Description ... 528
29.7. I2S Application Examples ... 538
29.8. Register Summary ... 541
29.9. Register Description ... 542

30. TC – Timer/Counter ... 555
30.1. Overview ... 555
30.2. Features ... 555
30.3. Block Diagram ... 556
30.4. Signal Description ... 556
30.5. Product Dependencies ... 557
30.6. Functional Description ... 558
30.7. Register Summary for 8-bit Registers ... 570
30.8. Register Description for 8-bit Registers ... 570
30.9. Register Summary for 16-bit Registers ... 586
30.10. Register Description for 16-bit Registers ... 586
30.11. Register Summary for 32-bit Registers ... 601
30.12. Register Description for 32-bit Registers ... 601

31. TCC – Timer/Counter for Control Applications ... 616
31.1. Overview ... 616
31.2. Features ... 616

Downloaded from Arrow.com.

31.3. Block Diagram....617
31.4. Signal Description....617
31.5. Product Dependencies....618
31.6. Functional Description....619
31.7. Register Summary....650
31.8. Register Description....652

32. USB – Universal Serial Bus....691
32.1. Overview....691
32.2. Features....691
32.3. USB Block Diagram....692
32.4. Signal Description....692
32.5. Product Dependencies....692
32.6. Functional Description....694
32.7. Communication Device Host Register Summary....710
32.8. Communication Device Host Register Description....710
32.9. Device Registers - Common -Register Summary....717
32.10. Device Registers - Common....717
32.11. Device Endpoint Register Summary....730
32.12. Device Endpoint Register Description....730
32.13. Endpoint Descriptor Structure....739
32.14. Device Endpoint RAM Register Summary....740
32.15. Device Endpoint RAM Register Description....740
32.16. Host Registers - Common - Register Summary....746
32.17. Host Registers - Common - Register Description....746
32.18. Host Registers - Pipe - Register Summary....760
32.19. Host Registers - Pipe - Register Description....760
32.20. Pipe Descriptor Structure....771
32.21. Host Registers - Pipe RAM - Register Summary....772
32.22. Host Registers - Pipe RAM - Register Description....772

33. ADC – Analog-to-Digital Converter....780
33.1. Overview....780
33.2. Features....780
33.3. Block Diagram....781
33.4. Signal Description....781
33.5. Product Dependencies....781
33.6. Functional Description....783
33.7. Register Summary....792
33.8. Register Description....792

34. AC – Analog Comparators....816
34.1. Overview....816
34.2. Features....816
34.3. Block Diagram....817
34.4. Signal Description....818
34.5. Product Dependencies....818
34.6. Functional Description....819

Downloaded from Arrow.com.

34.7. Register Summary....828
34.8. Register Description....828

35. DAC – Digital-to-Analog Converter....843
35.1. Overview....843
35.2. Features....843
35.3. Block Diagram....843
35.4. Signal Description....843
35.5. Product Dependencies....843
35.6. Functional Description....845
35.7. Register Summary....849
35.8. Register Description....849

36. Peripheral Touch Controller (PTC)....859
36.1. Overview....859
36.2. Features....859
36.3. Block Diagram....860
36.4. Signal Description....861
36.5. System Dependencies....861
36.6. Functional Description....862

37. Electrical Characteristics at 85°C....863
37.1. Disclaimer....863
37.2. Thermal Considerations....863
37.3. Absolute Maximum Ratings....864
37.4. General Operating Ratings....864
37.5. Supply Characteristics....865
37.6. Maximum Clock Frequencies....865
37.7. Power Consumption....867
37.8. Peripheral Power Consumption....871
37.9. I/O Pin Characteristics....874
37.10. Injection Current....876
37.11. Analog Characteristics....877
37.12. NVM Characteristics....890
37.13. Oscillators Characteristics....891
37.14. PTC Typical Characteristics....898
37.15. USB Characteristics....906
37.16. Timing Characteristics....907

38. Electrical Characteristics at 105°C....916
38.1. Disclaimer....916
38.2. Absolute Maximum Ratings....916
38.3. General Operating Ratings....916
38.4. Maximum Clock Frequencies....917
38.5. Power Consumption....918
38.6. Analog Characteristics....921
38.7. NVM Characteristics....928
38.8. Oscillators Characteristics....929
38.9. PTC Characteristics at 105°C....934

Downloaded from Arrow.com.

38.10. USB Characteristics....935

39. Electrical Characteristics at 125°C....936
39.1. Disclaimer....936
39.2. Absolute Maximum Ratings....936
39.3. General Operating Ratings....936
39.4. Maximum Clock Frequencies....937
39.5. Power Consumption....940
39.6. Analog Characteristics....943
39.7. NVM Characteristics....954
39.8. Oscillators Characteristics....955

40. AEC-Q100 125°C Specifications....965
40.1. Disclaimer....965
40.2. Thermal Considerations....965
40.3. Absolute Maximum Ratings....965
40.4. General Operating Ratings....966
40.5. Supply Characteristics....966
40.6. Maximum Clock Frequencies....967
40.7. Power Consumption....970
40.8. I/O Pin Characteristics....974
40.9. Analog Characteristics....977
40.10. NVM Characteristics....988
40.11. Oscillator Characteristics....989
40.12. PTC Characteristics....997

41. SAM DA1 Electrical Characteristics....1000
41.1. Disclaimer....1000
41.2. Thermal Considerations....1000
41.3. Absolute Maximum Ratings....1000
41.4. Supply Characteristics....1001
41.5. Maximum Clock Frequencies....1002
41.6. Power Consumption....1003
41.7. Peripheral Power Consumption....1006
41.8. I/O Pin Characteristics....1009
41.9. Injection Current....1012
41.10. Analog Characteristics....1013
41.11. NVM Characteristics....1022
41.12. Oscillators Characteristics....1022
41.13. PTC Typical Characteristics....1032
41.14. USB Characteristics....1040
41.15. Timing Characteristics....1041

42. Appendix A....1049
42.1. SIL 2 Enabled Functional Safety Devices....1049

43. Appendix B....1050
43.1. ISELED FULL License Enabled Functional Devices....1050
43.2. Ordering Information....1050

Downloaded from Arrow.com.

44. Packaging Information 1051
44.1. Package Drawings 1051
44.2. Soldering Profile 1111
44.3. Package Markings 1111

45. Schematic Checklist 1112
45.1. Introduction 1112
45.2. Power Supply 1112
45.3. External Analog Reference Connections 1113
45.4. External Reset Circuit 1114
45.5. Clocks and Crystal Oscillators 1116
45.6. Unused or Unconnected Pins 1118
45.7. Programming and Debug Ports 1118
45.8. USB Interface 1121

46. Conventions 1123
46.1. Numerical Notation 1123
46.2. Memory Size and Type 1123
46.3. Frequency and Time 1123
46.4. Registers and Bits 1124

47. Acronyms and Abbreviations 1125

48. Data Sheet Revision History 1128
48.1. Revision H - September 2021 1128
48.2. Revision G - April 2021 1128
48.3. Revision F - March 2020 1133
48.4. Revision E - January 2020 1134
48.5. Rev D - 9/2018 1135
48.6. Rev. C – 06/2018 1136
48.7. Rev. B – 04/2018 1136
48.8. Rev. A – 01/2017 1137
48.9. Rev. O – 12/2016 1137
48.10. Rev. N – 10/2016 1137
48.11. Rev. M – 09/2016 1138
48.12. Rev. L – 09/2016 1138
48.13. Rev. K – 09/2016 1139
48.14. Rev. J – 07/2016 1140
48.15. Rev. I – 03/2016 1140
48.16. Rev. H – 01/2016 1141
48.17. Rev. G – 09/2015 1142
48.18. Rev. F – 07/2015 1142
48.19. Rev. E – 02/2015 1143
48.20. Rev. D – 09/2014 1145
48.21. Rev. C – 07/2014 1145
48.22. Rev. B – 07/2014 1145
48.23. Rev. A - 02/2014 1149

The Microchip Web Site 1150

Downloaded from Arrow.com.

Customer Change Notification Service....1150
Customer Support....1150
Product Identification System....1151
Microchip Devices Code Protection Feature....1151
Legal Notice....1152
Trademarks....1152
Quality Management System Certified by DNV....1152
Worldwide Sales and Service....1153

Downloaded from Arrow.com.

1. Description

The SAM D21/DA1 is a series of low-power microcontrollers using the 32-bit Arm® Cortex®-M0+ processor, and ranging from 32-pins to 64-pins with up to 256 KB Flash and 32 KB of SRAM. The SAM D21/DA1 operates at a maximum frequency of 48 MHz and reach 2.46 CoreMark/MHz. They are designed for simple and intuitive migration with identical peripheral modules, hex compatible code, identical linear address map, and pin compatible migration paths between all devices in the product series. All devices include intelligent and flexible peripherals, Event System for inter-peripheral signaling, and support for capacitive touch button, slider, and wheel user interfaces.

The SAM D21/DA1 provides the following features: In-system programmable Flash, 12-channel Direct Memory Access Controller (DMAC), 12-channel Event System, programmable Interrupt Controller, up to 52 programmable I/O pins, 32-bit Real-Time Clock and Calendar (RTC), up to five 16-bit Timer/Counters (TC) and up to four 24-bit Timer/Counters for Control (TCC), where each TC can be configured to perform frequency and waveform generation, accurate program execution timing or input capture with time and frequency measurement of digital signals. The TCs can operate in 8-bit or 16-bit mode, selected TCs can be cascaded to form a 32-bit TC, and three timer/counters have extended functions optimized for motor, lighting, and other control applications. The series provide one full-speed USB 2.0 embedded host and device interface; up to six Serial Communication Modules (SERCOM) that each can be configured to act as an USART, UART, SPI, I^2C up to 3.4 MHz, SMBus, PMBus, and LIN client; two-channel I^2S interface; up to twenty-channel 350 ksps 12-bit ADC with programmable gain and optional oversampling and decimation supporting up to 16-bit resolution, one 10-bit 350 ksps DAC, up to four analog comparators with Window mode, Peripheral Touch Controller (PTG) supporting up to 256 buttons, sliders, wheels, and proximity sensing; programmable Watchdog Timer (WDT), brown-out detector and power-on Reset and two-pin Serial Wire Debug (SWD) program and debug interface.

All devices have accurate and low-power external and internal oscillators. All oscillators can be used as a source for the system clock. Different clock domains can be independently configured to run at different frequencies, enabling power saving by running each peripheral at its optimal clock frequency, and thus maintaining a high CPU frequency while reducing power consumption.

The SAM D21/DA1 have two software-selectable sleep modes, Idle and Stand-by. In Idle mode, the CPU is stopped while all other functions can be kept running. In Stand-by mode, all clocks and functions are stopped, expect those selected to continue running. The device supports SleepWalking. This feature allows the peripheral to wake up from sleep based on predefined conditions, and thus allows the CPU to wake up only when needed, for example, when a threshold is crossed or a result is ready. The Event System supports synchronous and asynchronous events, allowing peripherals to receive, react to and send events even in Stand-by mode.

The Flash program memory can be reprogrammed in-system through the SWD interface. The same interface can be used for non-intrusive on-chip debug of application code. A boot loader running in the device can use any communication interface to download and upgrade the application program in the Flash memory.

The SAM D21/DA1 microcontrollers are supported with a full suite of program and system development tools, including C compilers, macro assemblers, program debugger/simulators, programmers, and evaluation kits.

Downloaded from Arrow.com.

2. Configuration Summary

Table 2-1. SAM D21 E/G/J and SAM D21 EL/GL Product Family Features

Device	Program Memory (KB)	Data Memory (KB)	Pins	Packages	Oscillators		Peripherals												Analog			
					Internal	External	USB	SERCOM	TC-Waveform /PWM Output/Capture Input Channels per TCx Instance	TCC	Waveform /PWM Output Channels per TCCx Instance	I^2S	DMA Channels	RTC	WDT	Event System (Channels)	External Interrupt Lines	I/O Pins	ADC Channels	Analog Comparator	DAC	PTC (Mutual/Self-capacitance Channels)"
ATSAMD21E15A	32	4	32	TQFP, QFN	OSC32K, OSCULP32K, OSC8M, DFLL48M, FDPLL96M	XOSC32K, XOSC,	Y	4	3-2	3	8/4/2	Y	12	Y	Y	12	16	26	10	2	Y	60/6
ATSAMD21E16A	64	8																				
ATSAMD21E17A	128	16																				
ATSAMD21E18A	256	32																				
ATSAMD21E15B	32	4																				
ATSAMD21E16B	64	8																				
ATSAMD21E15C	32	4	35	WLCSP																		
ATSAMD21E16C	64	8			OSC32K, OSCULP32K, OSC8M, DFLL48M, FDPLL96M			6										38	14			120/10
ATSAMD21G15A	32	4	48	TQFP, QFN																		
ATSAMD21G16A	64	8																				
ATSAMD21G17A (1)	128	16																				
ATSAMD21G18A (1)	256	32																				
ATSAMD21G15B	32	4																				
ATSAMD21G16B	64	8																				
ATSAMD21J15A	32	4	64	TQFP, QFN	OSC32K, OSCULP32K, OSC8M, DFLL48M, FDPLL96M				5-2									52	20			256/16
ATSAMD21J16A	64	8																				
ATSAMD21J17A	128	16																				
ATSAMD21J18A	256	32																				
ATSAMD21J15B	32	4		TQFP, QFN, UFBGA																		
ATSAMD21J16B	64	8																				
ATSAMD21E15L	32	4	32	TQFP, QFN		XOSC	N	4	3-2		6/4/2	N						26	14	4		N
ATSAMD21E16L	64	8	32																			
ATSAMD21G16L	64	8	48	QFN				6	5-2		8/4/2							38	18			
ATSAMD21E17D	128	16	32	TQFP, QFN WLCSP	OSC32K, OSCULP32K, OSC8M, DFLL48M,	XOSC32K, XOSC	Y	4	3-2	4	6/4/2/6	Y						26	10	2		30/6
ATSAMD21G17D	128	16	48	QFN, TQFP	OSC32K, OSCULP32K, OSC8M, DFLL48M, FDPLL96M	XOSC32K, XOSC,	Y	6	3-2	4	8/4/2/8	Y	12	Y	Y	12	16	38	14	2	Y	120/10

Downloaded from Arrow.com.

.....continued

Device	Program Memory (KB)	Data Memory (KB)	Pins	Packages	Oscillators		Peripherals												Analog			
					Internal	External	USB	SERCOM	TC-Waveform /PWM Output/Capture Input Channels per TCx Instance	TCC	Waveform /PWM Output Channels per TCCx Instance	I^2S	DMA Channels	RTC	WDT	Event System (Channels)	External Interrupt Lines	I/O Pins	ADC Channels	Analog Comparator	DAC	PTC (Mutual/Self-capacitance Channels)"
ATSAMD21J17D	128	16	64	QFN, TQFP UFBGA	OSC32K, OSCULP32K, OSC8M, DFLL48M, FDPLL96M	XOSC32K, XOSC,	Y	6	5-2	4	8/4/2/8	Y	12	Y	Y	12	16	52	20	2	Y	256/16
ATSAMD21E17L	128	16	32	QFN, TQFP	OSC32K, OSCULP32K, OSC8M, DFLL48M, FDPLL96M	XOSC	N	4	3-2	4	6/4/2/6	N	12	Y	Y	12	16	26	14	4	Y	N
ATSAMD21G17L	128	16	48	QFN	OSC32K, OSCULP32K, OSC8M, DFLL48M, FDPLL96M	XOSC	N	6	5-2	4	8/4/2/8	N	12	Y	Y	12	16	38	18	4	Y	N

Note:

1. This part number is also available in a 45-Ball WLCSP package with a total of five TC instances and 15 ADC Channels.

Table 2-2. SAM DA1 E/G/J Product Family Features

Device	Program Memory (KB)	Data Memory (KB)	Pins	Packages	Internal	External	USB	SERCOM	TC-Waveform/PWM Output/Capture Input Channels per TCx Instance	TCC	Waveform/PWM Output Channels per TCCx Instance	I2S	DMA Channels	RTC	WDT	Event System (Channels)	External Interrupt Lines	I/O Pins	ADC Channels	Analog Comparator	DAC	PTC (Mutual/Self-capacitance Channels)
ATSAMDA1E14B	16	4	32	TQFP, QFN	OSC32K, OSCULP32K, OSC8M, DFLL48M, FDPLL96M	XOSC32K, XOSC	1	4	3-2	3	6/4/2	1	12	Y	Y	12	16	26	10	2	1	60/6
ATSAMDA1E15B	32																					
ATSAMDA1E16B	64	8																				
ATSAMDA1G14B	16	4	48					6			8/4/2							38	14			120/10
ATSAMDA1G15B	32																					
ATSAMDA1G16B	64	8																				
ATSAMDA1J14B	16	4	64	TQFP					5-2									52	20			256/16
ATSAMDA1J15B	32																					
ATSAMDA1J16B	64	8																				

Downloaded from Arrow.com.

3. SAM D21 Ordering Information(1)

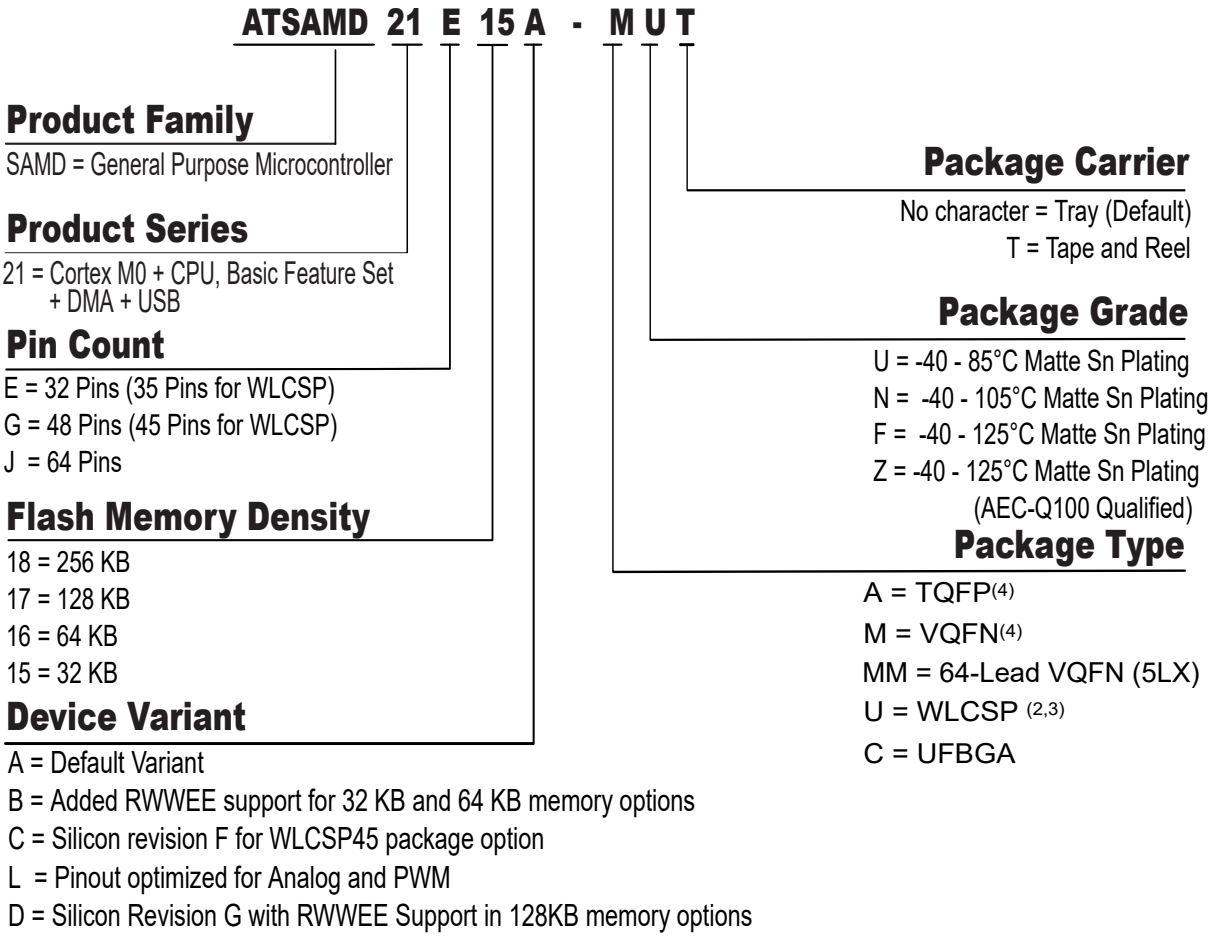

Notes:

1. Not all combinations are valid. The available ordering numbers are listed in the Configuration Summary.
2. WLCSP package is available in -40C to 85C operating temperature range.
3. WLCSP parts are programmed with a specific SPI/I^2C bootloader. Refer to "Application Note AT09002" for additional information. Contact Microchip sales office for additional information on availability.
4. The AEC-Q100 grade 1 qualified version is only offered in the TQFP and QFN packages. The QFN will have wettable flanks, and both packages will be assembled with gold bond wires.

Downloaded from Arrow.com.

3.1 SAM DA1 Ordering Information

Figure 3-1. SAM DA1 Ordering Information

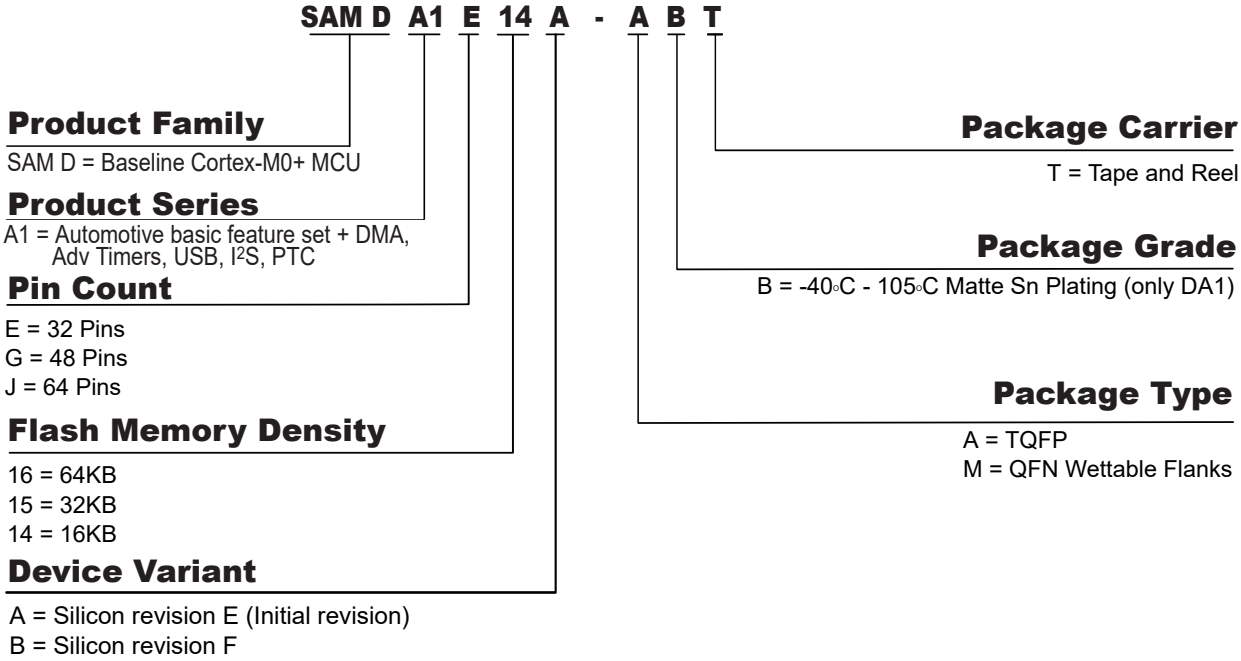

Note:

1. Not all combinations are valid. The available ordering numbers are listed in the Configuration Summary.

Downloaded from Arrow.com.

4. Block Diagram

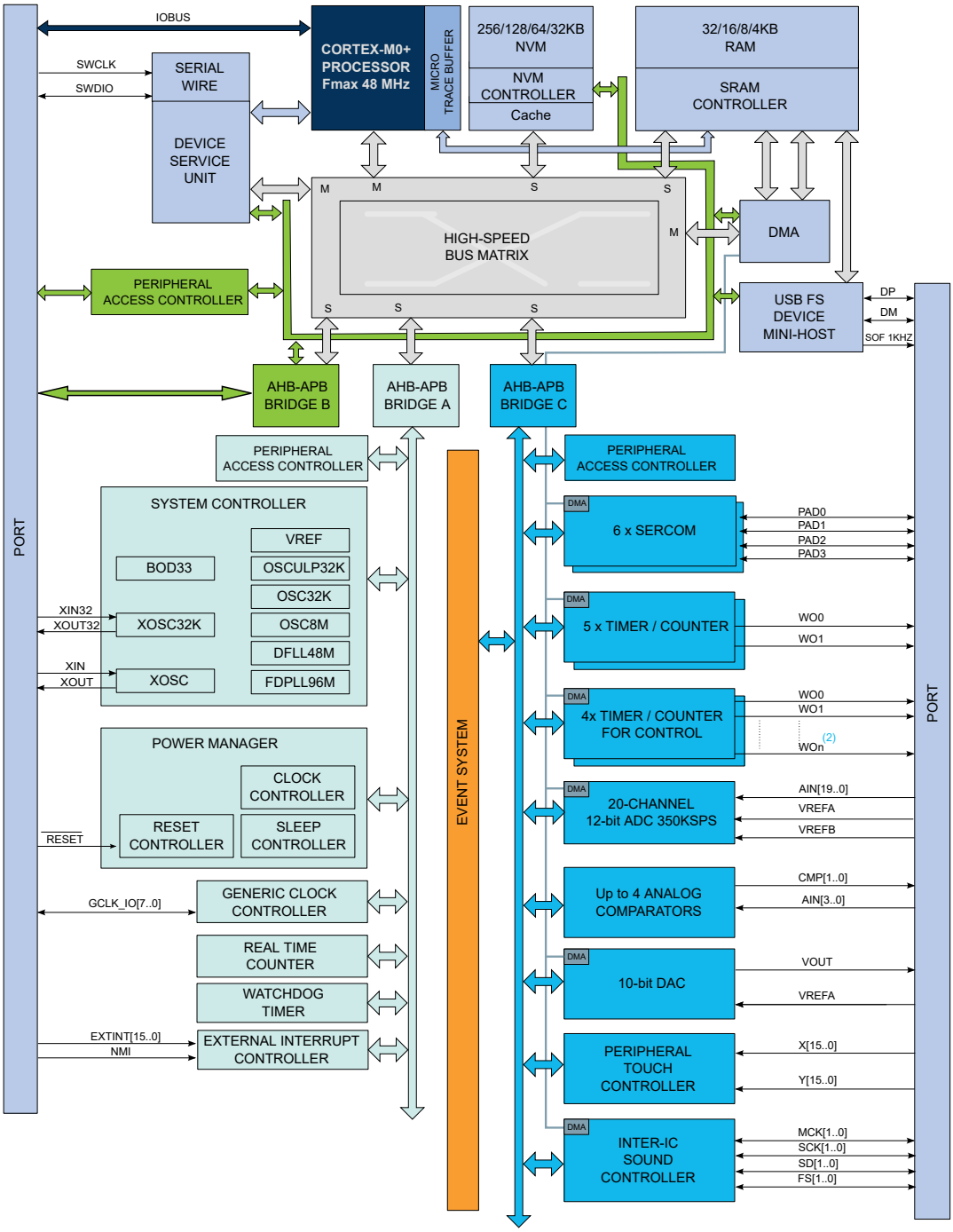

1. Some products have different number of SERCOM instances, Timer/Counter instances, PTC signals and ADC signals. Refer to the Configuration Summary for details.
2. The TCC instances have different configurations, including the number of Waveform Output (WO) lines. Refer to the TCC Configuration for details.

Related Links

2. Configuration Summary
7.2.5 TCC Configurations

Downloaded from Arrow.com.

5. Pinout

5.1 SAM D21J and SAM DA1J

5.1.1 QFN64 / TQFP64

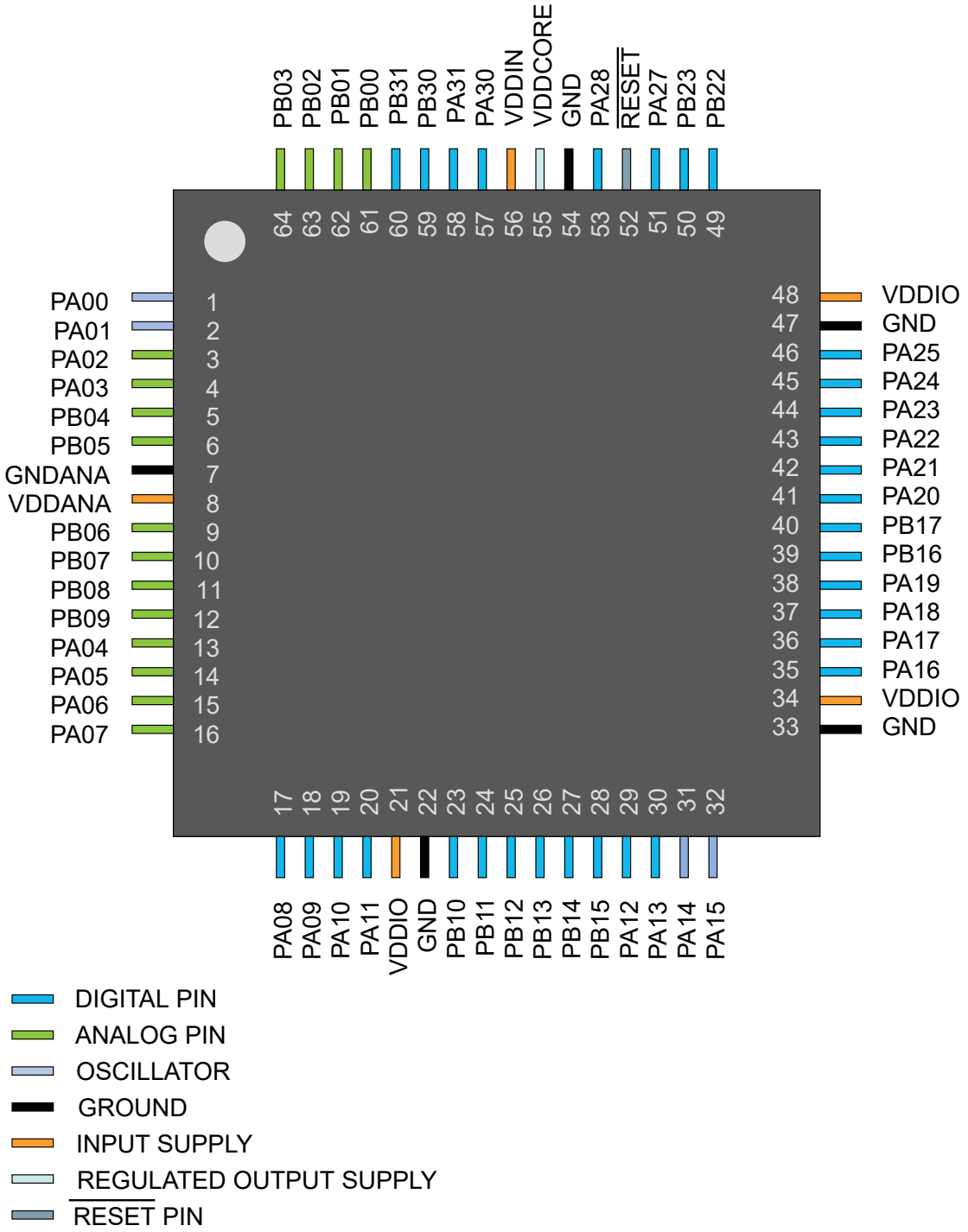

Downloaded from Arrow.com.

5.1.2 UFBGA64

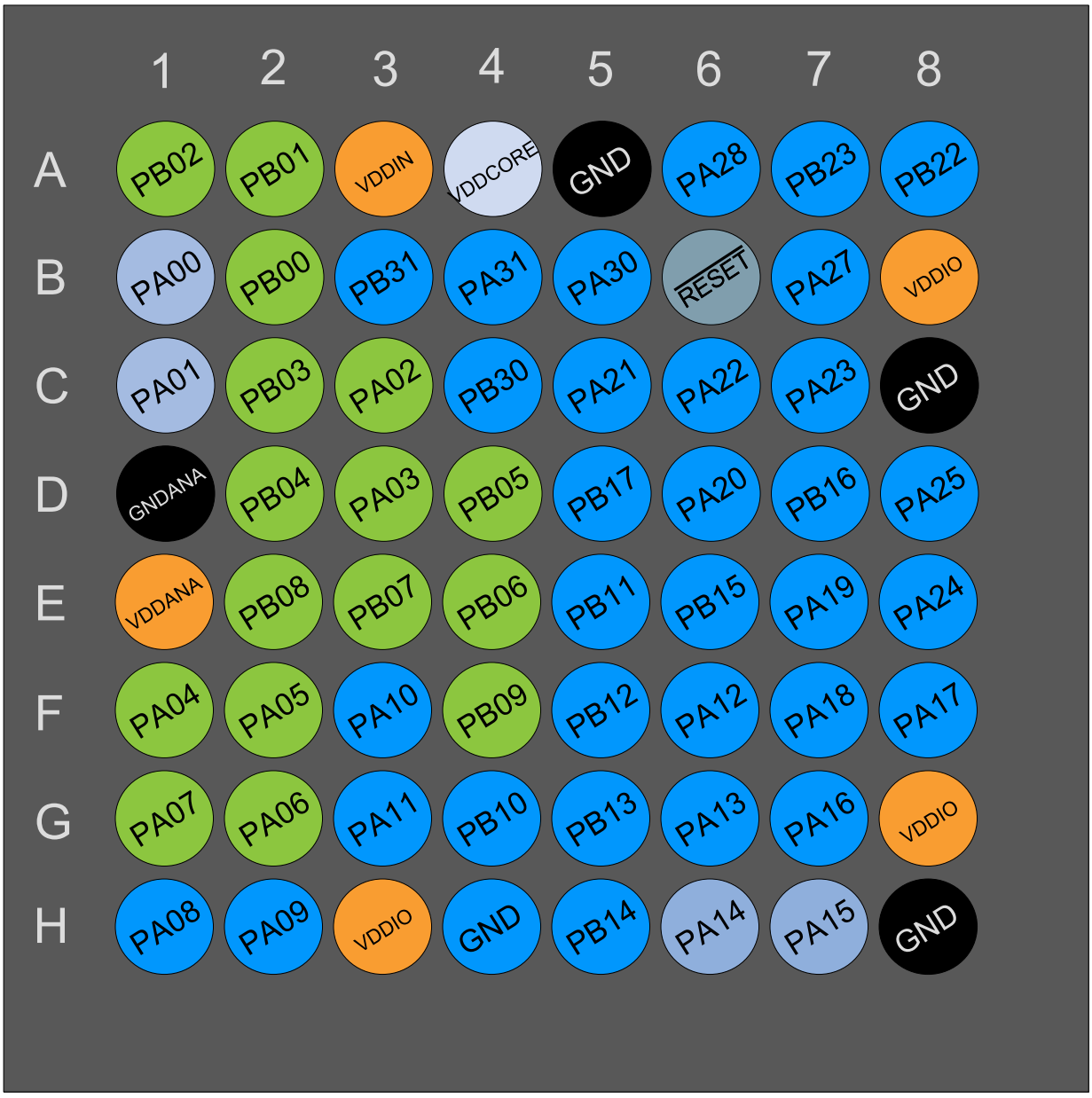

Downloaded from Arrow.com.

5.2 SAM D21GxxA/B/D and SAM DA1GxxA/B

5.2.1 QFN48 / TQFP48

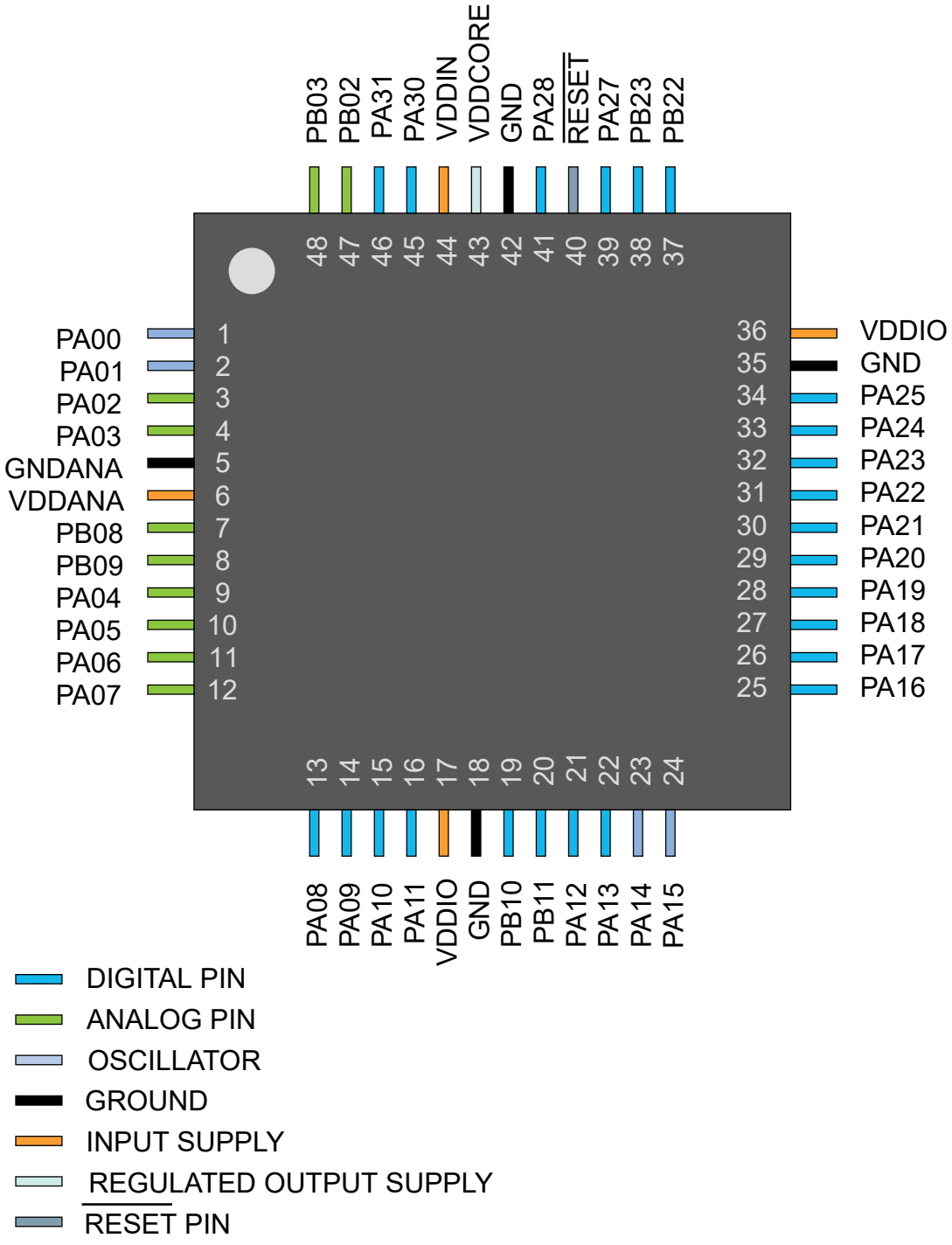

Downloaded from Arrow.com.

5.3 SAM D21GxxA

5.3.1 WLCSP45

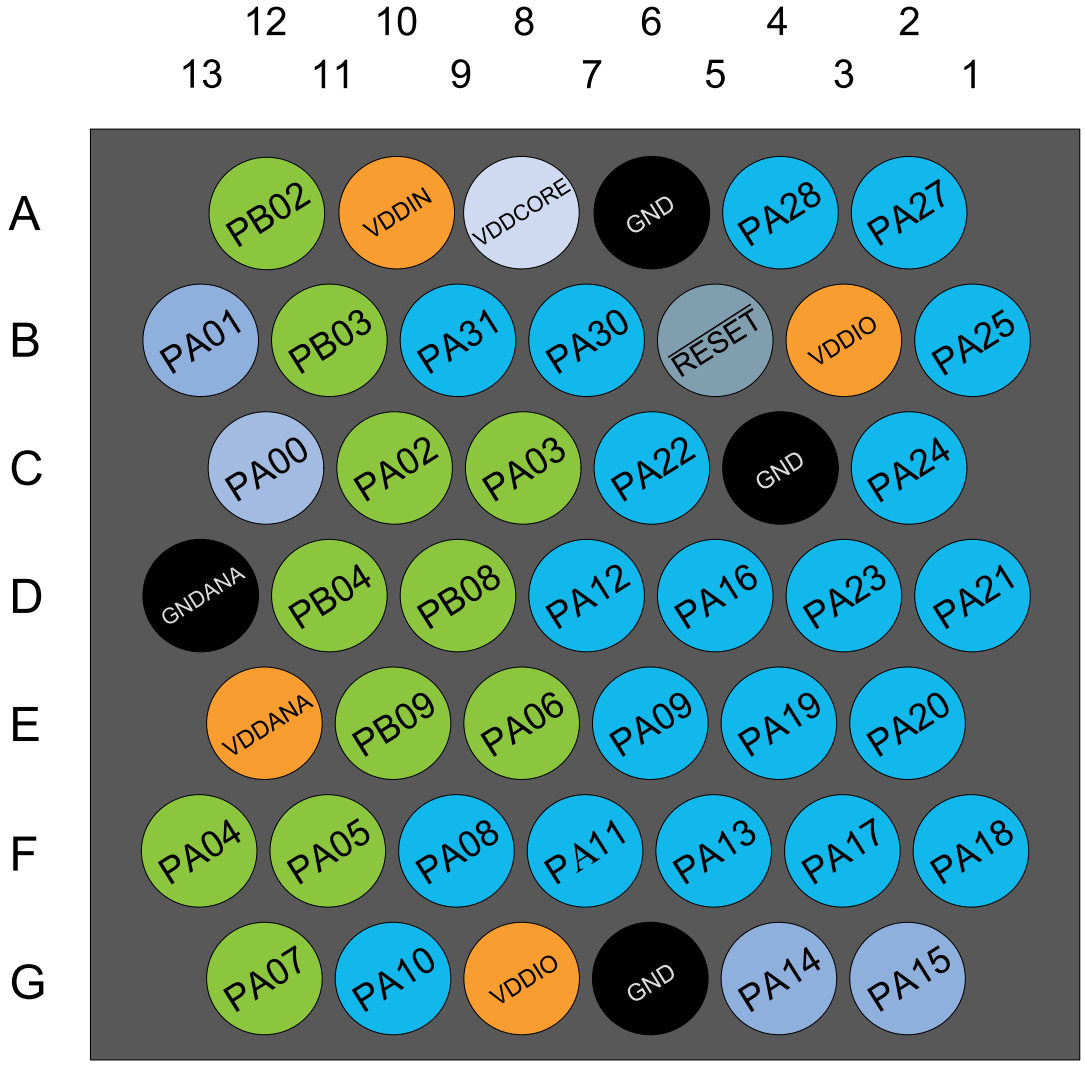

Downloaded from Arrow.com.

5.4 SAM D21GxxL

5.4.1 QFN48

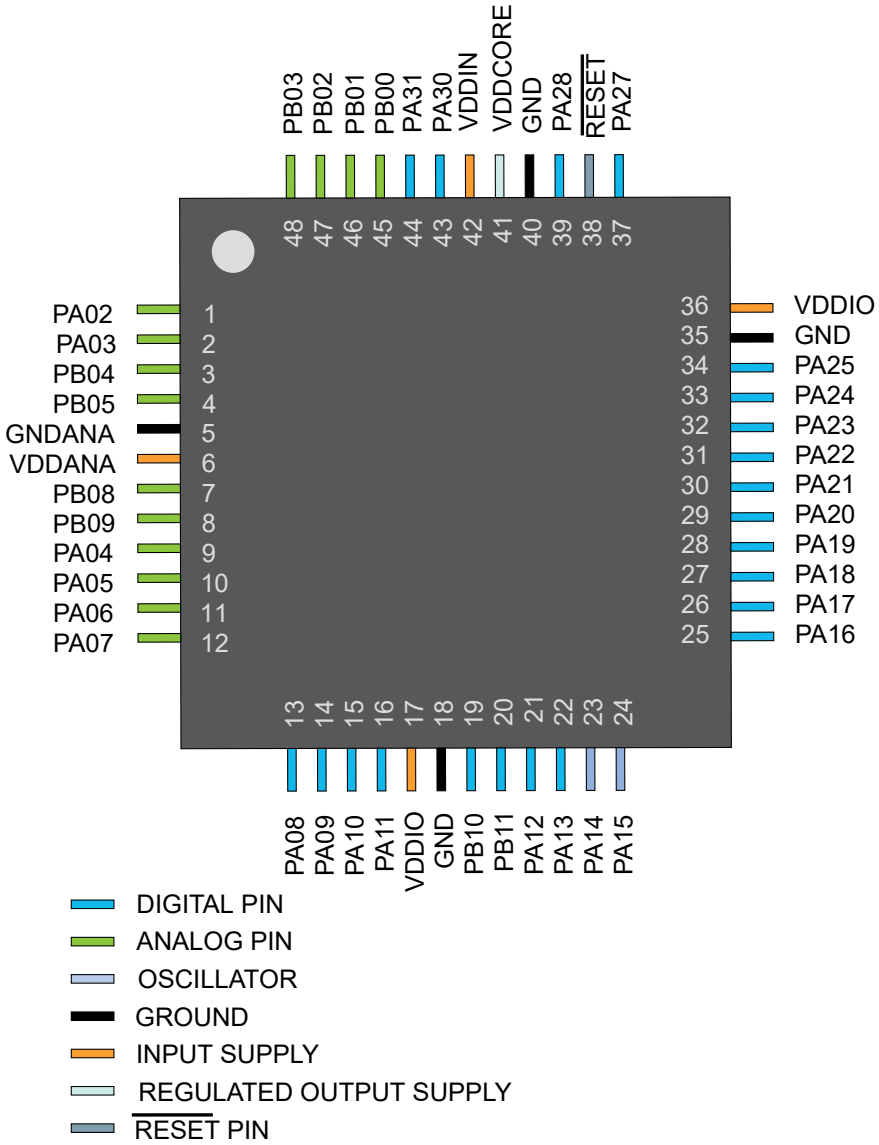

Downloaded from Arrow.com.

5.5 SAM D21ExxA/B/D and SAM DA1ExxA/B

5.5.1 QFN32 / TQFP32

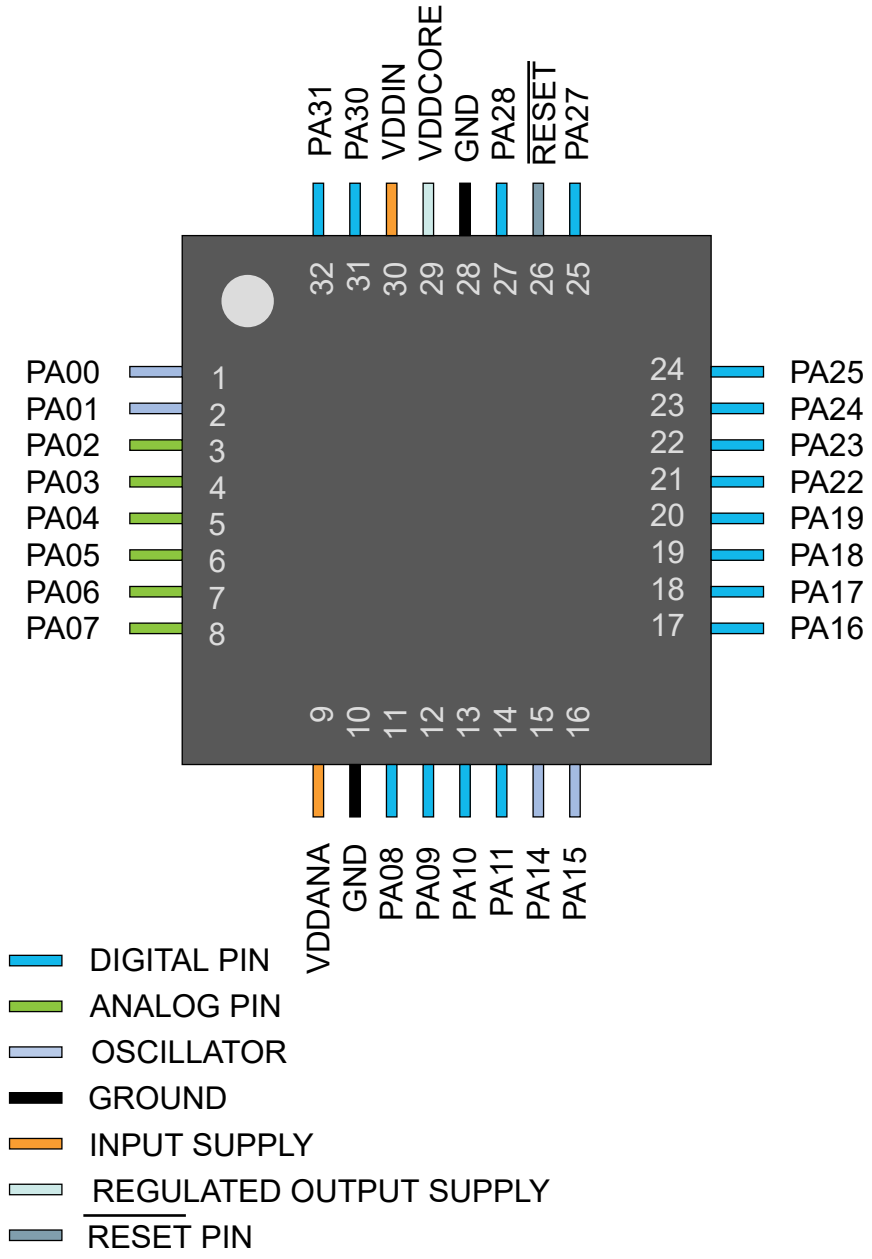

Downloaded from Arrow.com.

5.6 SAM D21ExxB/C/D

5.6.1 WLCSP35

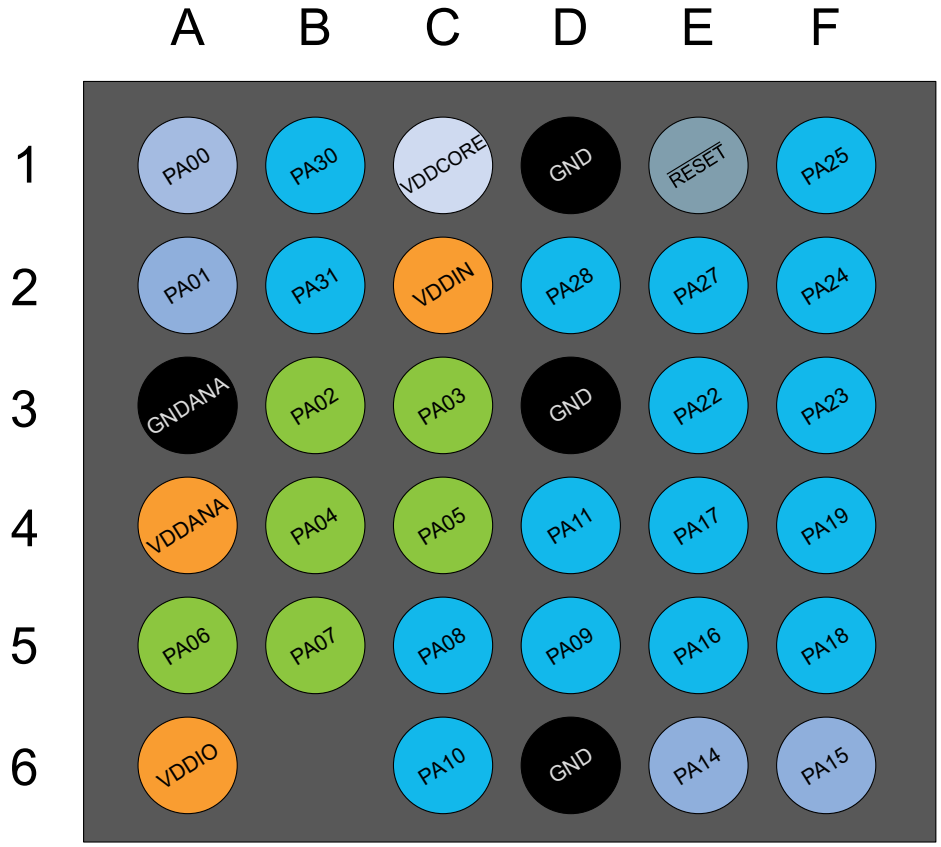

Downloaded from Arrow.com.

5.7 SAM D21ExxL

5.7.1 QFN32 / TQFP32

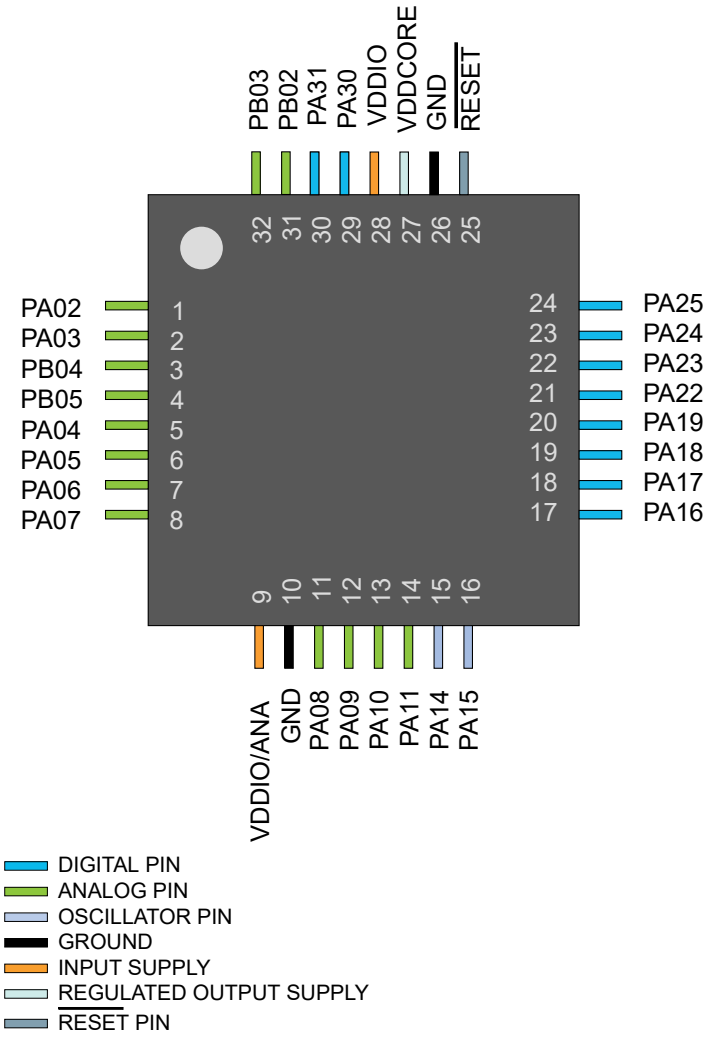

Downloaded from Arrow.com.

6. Signal Descriptions List

The following table gives details on signal names classified by peripheral.

Signal Name	Function	Type	Active Level
Analog Comparators - AC			
AIN[3:0]	AC Analog Inputs	Analog	
CMP[:0]	AC Comparator Outputs	Digital	
Analog Digital Converter - ADC			
AIN[19:0]	ADC Analog Inputs	Analog	
VREFA	ADC Voltage External Reference A	Analog	
VREFB	ADC Voltage External Reference B	Analog	
Digital Analog Converter - DAC			
VOUT	DAC Voltage output	Analog	
VREFA	DAC Voltage External Reference	Analog	
External Interrupt Controller			
EXTINT[15:0]	External Interrupts	Input	
NMI	External Non-Maskable Interrupt	Input	
Generic Clock Generator - GCLK			
GCLK_IO[7:0]	Generic Clock (source clock or generic clock generator output)	I/O	
Inter-IC Sound Controller - I^2S			
MCK[1:0]	Host Clock	I/O	
SCK[1:0]	Serial Clock	I/O	
FS[1:0]	I^2S Word Select or TDM Frame Sync	I/O	
SD[1:0]	Serial Data Input or Output	I/O	
Power Manager - PM			
$\overline{\text{RESET}}$	Reset	Input	Low
Serial Communication Interface - SERCOMx			
PAD[3:0]	SERCOM I/O Pads	I/O	
System Control - SYSCTRL			
XIN	Crystal Input	Analog/ Digital	
XIN32	32kHz Crystal Input	Analog/ Digital	
XOUT	Crystal Output	Analog	
XOUT32	32kHz Crystal Output	Analog	
Timer Counter - TCx			
WO[1:0]	Waveform/PWM Outputs/ Capture Inputs	Output	
Timer Counter - TCCx			
WO[7:0]	Waveform/PWM Outputs	Output	

© 2021 Microchip Technology Inc. and its subsidiaries

Downloaded from Arrow.com.

.....continued

Signal Name	Function	Type	Active Level
Peripheral Touch Controller - PTC			
X[15:0]	PTC Input	Analog	
Y[15:0]	PTC Input	Analog	
General Purpose I/O - PORT			
PA25 - PA00	Parallel I/O Controller I/O Port A	I/O	
PA28 - PA27	Parallel I/O Controller I/O Port A	I/O	
PA31 - PA30	Parallel I/O Controller I/O Port A	I/O	
PB17 - PB00	Parallel I/O Controller I/O Port B	I/O	
PB23 - PB22	Parallel I/O Controller I/O Port B	I/O	
PB31 - PB30	Parallel I/O Controller I/O Port B	I/O	
Universal Serial Bus - USB			
DP	DP for USB	I/O	
DM	DM for USB	I/O	
SOF 1kHz	USB Start of Frame	I/O	

Downloaded from Arrow.com.

7. I/O Multiplexing and Considerations

7.1 Multiplexed Signals

Each pin is by default controlled by the PORT as a general purpose I/O and alternatively it can be assigned to one of the peripheral functions A, B, C, D, E, F, G or H. To enable a peripheral function on a pin, the Peripheral Multiplexer Enable bit in the Pin Configuration register corresponding to that pin (PINCFGn.PMUXEN, n = 0-31) in the PORT must be written to one. The selection of peripheral function A to H is done by writing to the Peripheral Multiplexing Odd and Even bits in the Peripheral Multiplexing register (PMUXn.PMUXE/O) in the PORT.

This table describes the peripheral signals multiplexed to the PORT I/O pins.

Table 7-1. PORT Function Multiplexing for SAM D21 A/B/C/D Variant Devices and SAM DA1 A/B Variant Devices

Pin(1)			I/O Pin	Supply	A	B(2)(3)					C	D	E	F	G	H
SAMD2xE	SAMD2xG	SAMD2xJ			EIC	REF	ADC	AC	PTC	DAC	SERCOM(2)(3)	SERCOM-ALT	TC(4) /TCC	TCC	COM	AC/ GCLK
1	1	1	PA00	VDDANA	EXTINT[0]							SERCOM1/ PAD[0]	TCC2/WO[0]			
2	2	2	PA01	VDDANA	EXTINT[1]							SERCOM1/ PAD[1]	TCC2/WO[1]			
3	3	3	PA02	VDDANA	EXTINT[2]		AIN[0]		Y[0]	VOUT				TCC3/ WO[0]		
4	4	4	PA03	VDDANA	EXTINT[3]	ADC/VREFA DAC/VREFA	AIN[1]		Y[1]					TCC3/ WO[1]		
		5	PB04	VDDANA	EXTINT[4]		AIN[12]		Y[10]							
		6	PB05	VDDANA	EXTINT[5]		AIN[13]		Y[11]							
		9	PB06	VDDANA	EXTINT[6]		AIN[14]		Y[12]							
		10	PB07	VDDANA	EXTINT[7]		AIN[15]		Y[13]							
	7	11	PB08	VDDANA	EXTINT[8]		AIN[2]		Y[14]			SERCOM4/ PAD[0]	TC4/WO[0]	TCC3/ WO[6]		
	8	12	PB09	VDDANA	EXTINT[9]		AIN[3]		Y[15]			SERCOM4/ PAD[1]	TC4/WO[1]	TCC3/ WO[7]		
5	9	13	PA04	VDDANA	EXTINT[4]	ADC/VREFB	AIN[4]	AIN[0]	Y[2]			SERCOM0/ PAD[0]	TCC0/WO[0]	TCC3/ WO[2]		
6	10	14	PA05	VDDANA	EXTINT[5]		AIN[5]	AIN[1]	Y[3]			SERCOM0/ PAD[1]	TCC0/WO[1]	TCC3/ WO[3]		
7	11	15	PA06	VDDANA	EXTINT[6]		AIN[6]	AIN[2]	Y[4]			SERCOM0/ PAD[2]	TCC1/WO[0]	TCC3/ WO[4]		
8	12	16	PA07	VDDANA	EXTINT[7]		AIN[7]	AIN[3]	Y[5]			SERCOM0/ PAD[3]	TCC1/WO[1]	TCC3/ WO[5]	I2S/SD[0]	
11	13	17	PA08	VDDIO	NMI		AIN[16]		X[0]		SERCOM0/ PAD[0]	SERCOM2/ PAD[0]	TCC0/WO[0]	TCC1/ WO[2]	I2S/SD[1]	
12	14	18	PA09	VDDIO	EXTINT[9]		AIN[17]		X[1]		SERCOM0/ PAD[1]	SERCOM2/ PAD[1]	TCC0/WO[1]	TCC1/ WO[3]	I2S/ MCK[0]	
13	15	19	PA10	VDDIO	EXTINT[10]		AIN[18]		X[2]		SERCOM0/ PAD[2]	SERCOM2/ PAD[2]	TCC1/WO[0]	TCC0/ WO[2]	I2S/ SCK[0]	GCLK_IO[4]
14	16	20	PA11	VDDIO	EXTINT[11]		AIN[19]		X[3]		SERCOM0/ PAD[3]	SERCOM2/ PAD[3]	TCC1/WO[1]	TCC0/ WO[3]	I2S/FS[0]	GCLK_IO[5]
	19	23	PB10	VDDIO	EXTINT[10]							SERCOM4/ PAD[2]	TC5/WO[0]	TCC0/ WO[4]	I2S/ MCK[1]	GCLK_IO[4]
	20	24	PB11	VDDIO	EXTINT[11]							SERCOM4/ PAD[3]	TC5/WO[1]	TCC0/ WO[5]	I2S/ SCK[1]	GCLK_IO[5]
		25	PB12	VDDIO	EXTINT[12]				X[12]		SERCOM4/ PAD[0]		TC4/WO[0]	TCC0/ WO[6]	I2S/FS[1]	GCLK_IO[6]
		26	PB13	VDDIO	EXTINT[13]				X[13]		SERCOM4/ PAD[1]		TC4/WO[1]	TCC0/ WO[7]		GCLK_IO[7]
		27	PB14	VDDIO	EXTINT[14]				X[14]		SERCOM4/ PAD[2]		TC5/WO[0]			GCLK_IO[0]

Downloaded from Arrow.com.

.....continued

Pin[1]			I/O Pin	Supply	A	B[2][3]					C	D	E	F	G	H
SAMD2xE	SAMD2xG	SAMD2xJ			EIC	REF	ADC	AC	PTC	DAC	SERCOM[2][3]	SERCOM-ALT	TC[4] /TCC	TCC	COM	AC/ GCLK
		28	PB15	VDDIO	EXTINT[15]				X[15]		SERCOM4/ PAD[3]		TC5/WO[1]			GCLK_IO[1]
	21	29	PA12	VDDIO	EXTINT[12]						SERCOM2/ PAD[0]	SERCOM4/ PAD[0]	TCC2/WO[0]	TCC0/ WO[6]		AC/CMP[0]
	22	30	PA13	VDDIO	EXTINT[13]						SERCOM2/ PAD[1]	SERCOM4/ PAD[1]	TCC2/WO[1]	TCC0/ WO[7]		AC/CMP[1]
15	23	31	PA14	VDDIO	EXTINT[14]						SERCOM2/ PAD[2]	SERCOM4/ PAD[2]	TC3/WO[0]	TCC0/ WO[4]		GCLK_IO[0]
16	24	32	PA15	VDDIO	EXTINT[15]						SERCOM2/ PAD[3]	SERCOM4/ PAD[3]	TC3/WO[1]	TCC0/ WO[5]		GCLK_IO[1]
17	25	35	PA16	VDDIO	EXTINT[0]				X[4]		SERCOM1/ PAD[0]	SERCOM3/ PAD[0]	TCC2/WO[0]	TCC0/WO[6]		GCLK_IO[2]
18	26	36	PA17	VDDIO	EXTINT[1]				X[5]		SERCOM1/ PAD[1]	SERCOM3/ PAD[1]	TCC2/WO[1]	TCC0/WO[7]		GCLK_IO[3]
19	27	37	PA18	VDDIO	EXTINT[2]				X[6]		SERCOM1/ PAD[2]	SERCOM3/ PAD[2]	TC3/WO[0]	TCC0/ WO[2]		AC/CMP[0]
20	28	38	PA19	VDDIO	EXTINT[3]				X[7]		SERCOM1/ PAD[3]	SERCOM3/ PAD[3]	TC3/WO[1]	TCC0/ WO[3]	I2S/SD[0]	AC/CMP[1]
		39	PB16	VDDIO	EXTINT[0]						SERCOM5/ PAD[0]		TC6/WO[0]	TCC0/ WO[4]	I2S/SD[1]	GCLK_IO[2]
		40	PB17	VDDIO	EXTINT[1]						SERCOM5/ PAD[1]		TC6/WO[1]	TCC0/ WO[5]	I2S/ MCK[0]	GCLK_IO[3]
	29	41	PA20	VDDIO	EXTINT[4]				X[8]		SERCOM5/ PAD[2]	SERCOM3/ PAD[2]	TC7/WO[0]	TCC0/ WO[6]	I2S/ SCK[0]	GCLK_IO[4]
	30	42	PA21	VDDIO	EXTINT[5]				X[9]		SERCOM5/ PAD[3]	SERCOM3/ PAD[3]	TC7/WO[1]	TCC0/ WO[7]	I2S/FS[0]	GCLK_IO[5]
21	31	43	PA22	VDDIO	EXTINT[6]				X[10]		SERCOM3/ PAD[0]	SERCOM5/ PAD[0]	TC4/WO[0]	TCC0/ WO[4]		GCLK_IO[6]
22	32	44	PA23	VDDIO	EXTINT[7]				X[11]		SERCOM3/ PAD[1]	SERCOM5/ PAD[1]	TC4/WO[1]	TCC0/ WO[5]	USB/SOF 1kHz	GCLK_IO[7]
23	33	45	PA24[6]	VDDIO	EXTINT[12]						SERCOM3/ PAD[2]	SERCOM5/ PAD[2]	TC5/WO[0]	TCC1/ WO[2]	USB/DM	
24	34	46	PA25[6]	VDDIO	EXTINT[13]						SERCOM3/ PAD[3]	SERCOM5/ PAD[3]	TC5/WO[1]	TCC1/ WO[3]	USB/DP	
	37	49	PB22	VDDIO	EXTINT[6]							SERCOM5/ PAD[2]	TC7/WO[0]	TCC3/ WO[0]		GCLK_IO[0]
	38	50	PB23	VDDIO	EXTINT[7]							SERCOM5/ PAD[3]	TC7/WO[1]	TCC3/ WO[1]		GCLK_IO[1]
25	39	51	PA27	VDDIO	EXTINT[15]									TCC3/ WO[6]		GCLK_IO[0]
27	41	53	PA28	VDDIO	EXTINT[8]									TCC3/ WO[7]		GCLK_IO[0]
31	45	57	PA30	VDDIO	EXTINT[10]							SERCOM1/ PAD[2]	TCC1/WO[0]	TCC3/ WO[4]	SWCLK	GCLK_IO[0]
32	46	58	PA31	VDDIO	EXTINT[11]							SERCOM1/ PAD[3]	TCC1/WO[1]	TCC3/ WO[5]	SWDIO[5]	
		59	PB30	VDDIO	EXTINT[14]							SERCOM5/ PAD[0]	TCC0/WO[0]	TCC1/ WO[2]		
		60	PB31	VDDIO	EXTINT[15]							SERCOM5/ PAD[1]	TCC0/WO[1]	TCC1/ WO[3]		
		61	PB00	VDDANA	EXTINT[0]		AIN[8]		Y[6]			SERCOM5/ PAD[2]	TC7/WO[0]			
		62	PB01	VDDANA	EXTINT[1]		AIN[9]		Y[7]			SERCOM5/ PAD[3]	TC7/WO[1]			
	47	63	PB02	VDDANA	EXTINT[2]		AIN[10]		Y[8]			SERCOM5/ PAD[0]	TC6/WO[0]	TCC3/ WO[2]		
	48	64	PB03	VDDANA	EXTINT[3]		AIN[11]		Y[9]			SERCOM5/ PAD[1]	TC6/WO[1]	TCC3/ WO[3]		

Downloaded from Arrow.com.

1. Use the SAMD21J pinout muxing for WLCSP45 package.
2. All analog pin functions are on peripheral function B. Peripheral function B must be selected to disable the digital control of the pin.
3. Only some pins can be used in SERCOM I2C mode. Refer to 7.2.3 SERCOM I2C Pins.
4. TC6 and TC7 are not supported on the SAM D21E. Refer to 2. Configuration Summary for details.
5. This function is only activated in the presence of a debugger.
6. If the PA24 and PA25 pins are not connected, it is recommended to enable a pull-up on PA24 and PA25 through input GPIO mode. The aim is to avoid an eventually extract power consumption (<1mA) due to a not stable level on pad. The port PA24 and PA25 doesn't have Drive Strength option.
7. SERCOM4 and SERCOM5 are not supported in SAMD21ExxA, SAMD21E15(B/BU/CU/L), SAMD21E16(B/BU/CU/L) and SAMD21E17(D/DU/L). Refer to the 2. Configuration Summary for details.
8. TCC3 is only supported in SAMD21x17D. Refer to the 2. Configuration Summary for details.

Table 7-2. PORT Function Multiplexing for L Variant Devices

Pin		I/O Pin	Supply	A	B(1)(2)				C	D	E	F	G	H
SAMD21ExL	SAMD21GxL			EIC	REF	ADC	AC	AC1	DAC	SERCOM(1)(2)	SERCOM-ALT(7)	TC(3) /TCC	TCC	COM	AC/ GCLK
1	1	PA02	VDDANA	EXTINT[2]		AIN[0]			VOUT				TCC3/ WO[0]		
2	2	PA03	VDDANA	EXTINT[3]	DAC/VREFA	AIN[1]							TCC3/ WO[1]		
3	3	PB04	VDDANA	EXTINT[4]		AIN[12]		AIN[0]							
4	4	PB05	VDDANA	EXTINT[5]		AIN[13]		AIN[1]							
	7	PB08	VDDANA	EXTINT[8]		AIN[2]					SERCOM4/ PAD[0]	TC4/WO[0]	TCC3/ WO[6]		
	8	PB09	VDDANA	EXTINT[9]		AIN[3]					SERCOM4/ PAD[1]	TC4/WO[1]	TCC3/ WO[7]		
5	9	PA04	VDDANA	EXTINT[4]	ADC/VREFB	AIN[4]	AIN[0]				SERCOM0/ PAD[0]	TCC0/WO[0]	TCC3/ WO[2]		
6	10	PA05	VDDANA	EXTINT[5]		AIN[5]	AIN[1]				SERCOM0/ PAD[1]	TCC0/WO[1]	TCC3/ WO[3]		
7	11	PA06	VDDANA	EXTINT[6]		AIN[6]	AIN[2]				SERCOM0/ PAD[2]	TCC1/WO[0]	TCC3/ WO[4]		
8	12	PA07	VDDANA	EXTINT[7]		AIN[7]	AIN[3]				SERCOM0/ PAD[3]	TCC1/WO[1]	TCC3/ WO[5]		
11	13	PA08	VDDIO	NMI		AIN[16]				SERCOM0/ PAD[0]	SERCOM2/ PAD[0]	TCC0/WO[0]	TCC1/ WO[2]		
12	14	PA09	VDDIO	EXTINT[9]		AIN[17]				SERCOM0/ PAD[1]	SERCOM2/ PAD[1]	TCC0/WO[1]	TCC1/ WO[3]		
13	15	PA10	VDDIO	EXTINT[10]		AIN[18]				SERCOM0/ PAD[2]	SERCOM2/ PAD[2]	TCC1/WO[0]	TCC0/ WO[2]		GCLK_IO[4]
14	16	PA11	VDDIO	EXTINT[11]		AIN[19]				SERCOM0/ PAD[3]	SERCOM2/ PAD[3]	TCC1/WO[1]	TCC0/ WO[3]		GCLK_IO[5]
	19	PB10	VDDIO	EXTINT[10]							SERCOM4/ PAD[2]	TC5/WO[0]	TCC0/ WO[4]		GCLK_IO[4]
	20	PB11	VDDIO	EXTINT[11]							SERCOM4/ PAD[3]	TC5/WO[1]	TCC0/ WO[5]		GCLK_IO[5]
	21	PA12	VDDIO	EXTINT[12]						SERCOM2/ PAD[0]	SERCOM4/ PAD[0]	TCC2/WO[0]	TCC0/ WO[6]		AC/CMP[0]
	22	PA13	VDDIO	EXTINT[13]						SERCOM2/ PAD[1]	SERCOM4/ PAD[1]	TCC2/WO[1]	TCC0/ WO[7]		AC/CMP[1]
15	23	PA14	VDDIO	EXTINT[14]						SERCOM2/ PAD[2]	SERCOM4/ PAD[2]	TC3/WO[0]	TCC0/ WO[4]		GCLK_IO[0]
16	24	PA15	VDDIO	EXTINT[15]						SERCOM2/ PAD[3]	SERCOM4/ PAD[3]	TC3/WO[1]	TCC0/ WO[5]		GCLK_IO[1]
17	25	PA16	VDDIO	EXTINT[0]						SERCOM1/ PAD[0]	SERCOM3/ PAD[0]	TCC2/WO[0]	TCC0/WO[6]		GCLK_IO[2]
18	26	PA17	VDDIO	EXTINT[1]						SERCOM1/ PAD[1]	SERCOM3/ PAD[1]	TCC2/WO[1]	TCC0/WO[7]		GCLK_IO[3]

Downloaded from Arrow.com.

.....continued

Pin		I/O Pin	Supply	A	B[1][2]					C	D	E	F	G	H
SAMD21ExL	SAMD21GxL			EIC	REF	ADC	AC	AC1	DAC	SERCOM[1][2]	SERCOM-ALT[7]	TC[3] /TCC	TCC	COM	AC/ GCLK
19	27	PA18	VDDIO	EXTINT[2]						SERCOM1/ PAD[2]	SERCOM3/ PAD[2]	TC3/WO[0]	TCC0/ WO[2]		AC/CMP[0]
20	28	PA19	VDDIO	EXTINT[3]						SERCOM1/ PAD[3]	SERCOM3/ PAD[3]	TC3/WO[1]	TCC0/ WO[3]		AC/CMP[1]
	29	PA20	VDDIO	EXTINT[4]						SERCOM5/ PAD[2]	SERCOM3/ PAD[2]	TC7/WO[0]	TCC0/ WO[6]		GCLK_IO[4]
	30	PA21	VDDIO	EXTINT[5]						SERCOM5/ PAD[3]	SERCOM3/ PAD[3]	TC7/WO[1]	TCC0/ WO[7]		GCLK_IO[5]
21	31	PA22	VDDIO	EXTINT[6]						SERCOM3/ PAD[0]	SERCOM5/ PAD[0]	TC4/WO[0]	TCC0/ WO[4]		GCLK_IO[6]
22	32	PA23	VDDIO	EXTINT[7]						SERCOM3/ PAD[1]	SERCOM5/ PAD[1]	TC4/WO[1]	TCC0/ WO[5]		GCLK_IO[7]
23	33	PA24[5]	VDDIO	EXTINT[12]						SERCOM3/ PAD[2]	SERCOM5/ PAD[2]	TC5/WO[0]	TCC1/ WO[2]		AC1/CMP[0]
24	34	PA25[5]	VDDIO	EXTINT[13]						SERCOM3/ PAD[3]	SERCOM5/ PAD[3]	TC5/WO[1]	TCC1/ WO[3]		AC1/CMP[1]
	37	PA27	VDDIO	EXTINT[15]									TCC3/ WO[6]		GCLK_IO[0]
	39	PA28	VDDIO	EXTINT[8]									TCC3/ WO[7]		GCLK_IO[0]
29	43	PA30	VDDIO	EXTINT[10]							SERCOM1/ PAD[2]	TCC1/WO[0]	TCC3/ WO[4]	SWCLK	GCLK_IO[0]
30	44	PA31	VDDIO	EXTINT[11]							SERCOM1/ PAD[3]	TCC1/WO[1]	TCC3/ WO[5]	SWDIO[5]	
	45	PB00				AIN[8]									
	46	PB01				AIN[9]									
31	47	PB02	VDDANA	EXTINT[2]		AIN[10]		AIN[2]			SERCOM5/ PAD[0]	TC6/WO[0][6]	TCC3/ WO[2]		
32	48	PB03	VDDANA	EXTINT[3]		AIN[11]		AIN[3]			SERCOM5/ PAD[1]	TC6/WO[1][6]	TCC3/ WO[3]		

1. All analog pin functions are on peripheral function B. Peripheral function B must be selected to disable the digital control of the pin.
2. Only some pins can be used in SERCOM I^2C mode.
3. TC6 and TC7 are not supported on the SAM D21ExL and SAM D21GxL devices. Refer to 2. Configuration Summary for details.
4. This function is only activated in the presence of a debugger.
5. If the PA24 and PA25 pins are not connected, it is recommended to enable a pull-up on PA24 and PA25 through input GPIO mode. The aim is to avoid an eventually extract power consumption (<1mA) due to a not stable level on pad. The port PA24 and PA25 doesn't have Drive Strength option.
6. TC6 is only available on the SAM D21GxL and not the SAM D21ExL.
7. SERCOM4 and SERCOM5 are not supported on the SAM D21E devices. Refer to 2. Configuration Summary for details.
8. TCC3 is only supported in SAMD21x17L devices. Refer to the 2. Configuration Summary for details.

Related Links

37. Electrical Characteristics at 85°C

7.2 Other Functions

7.2.1 Oscillator Pinout

The oscillators are not mapped to the normal port functions and their multiplexing are controlled by registers in the System Controller (SYSCTRL).

Downloaded from Arrow.com.

Table 7-3. Oscillator Pinout

Oscillator	Supply	Signal	I/O Pin
XOSC	VDDIO	XIN	PA14
		XOUT	PA15
XOSC32K	VDDANA	XIN32	PA00
		XOUT32	PA01

7.2.2 Serial Wire Debug Interface Pinout

Only the SWCLK pin is mapped to the normal port functions. A debugger cold-plugging or hot-plugging detection will automatically switch the SWDIO port to the SWDIO function.

Table 7-4. Serial Wire Debug Interface Pinout

Signal	Supply	I/O Pin
SWCLK	VDDIO	PA30
SWDIO	VDDIO	PA31

7.2.3 SERCOM I^2C Pins

Table 7-5. SERCOM Pins Supporting I^2C

Device	Pins Supporting I^2C mode
32 pins	PA08, PA09, PA16, PA17, PA22, PA23
48 pins	PA08, PA09, PA12, PA13, PA16, PA17, PA22, PA23
64 pins	PA08, PA09, PA12, PA13, PA16, PA17, PA22, PA23, PB12, PB13, PB16, PB17, PB30, PB31

7.2.4 GPIO Clusters

Table 7-6. GPIO Clusters

PACKAGE	CLUSTER	GPIO																SUPPLIES PINS CONNECTED TO THE CLUSTER
64pins	1	PB31	PB30	PA31	PA30													VDDIN pin56/GND pin54
	2	PA28	PA27	PB23	PB22													VDDIN pin56/GND pin54 and VDDIO pin 48/GND pin47
	3	PA25	PA24	PA23	PA22	PA21	PA20	PB17	PB16	PA19	PA18	PA17	PA16					VDDIO pin 48/GND pin47 and VDDIO pin34/GND pin33
	4	PA15	PA14	PA13	PA12	PB15	PB14	PB13	PB12	PB11	PB10							VDDIO pin 34/GND pin33 and VDDIO pin21/GND pin22
	5	PA11	PA10	PA09	PA08													VDDIO pin21/GND pin22
	6	PA07	PA06	PA05	PA04	PB09	PB08	PB07	PB06									VDDANA pin 8/GNDANA pin7
	7	PB05	PB04	PA03	PA02	PA01	PA00	PB03	PB02	PB01	PB00							VDDANA pin 8/GNDANA pin7

Downloaded from Arrow.com.

.....continued

PACKAGE	CLUSTER	GPIO																SUPPLIES PINS CONNECTED TO THE CLUSTER
48pins	1	PA31	PA30															VDDIN pin44/GND pin42
	2	PA28	PA27	PB23	PB22													VDDIN pin44/GND pin42 and VDDIO pin36/GND pin35
	3	PA25	PA24	PA23	PA22	PA21	PA20	PA19	PA18	PA17	PA16	PA15	PA14	PA13	PA12	PB11	PB10	VDDIO pin36/GND pin35 and VDDIO pin17/GND pin18
	4	PA11	PA10	PA09	PA08													VDDIO pin17/GND pin18
	5	PA07	PA06	PA05	PA04	PB09	PB08											VDDANA pin6/GNDANA pin5
	6	PA03	PA02	PA01	PA00	PB03	PB02	PB05	PB04	PB01	PB00							VDDANA pin6/GNDANA pin5
32pins	1	PA31	PA30															VDDIN pin30/GND pin 28
	2	PA28	PA27	PA25	PA24	PA23	PA22	PA19	PA18	PA17	PA16	PA15	PA14	PA11	PA10	PA09	PA08	VDDIN pin30/GND pin 28 and VDDANA pin9/GND pin10
	3	PA07	PA06	PA05	PA04	PA03	PA02	PA01	PA00	PB05	PB04	PB03	PB02					VDDANA pin9/GND pin10

7.2.5 TCC Configurations

The SAM D21/DA1 has up to four instances of the Timer/Counter for Control applications (TCC) peripheral, TCC[3:0]. The following table lists the feature details of the each TCC instance.

Table 7-7. TCC Configuration Summary

TCC#	Channels (CC_NUM)	Waveform Output (WO_NUM)	Counter Size	Fault	Dithering	Output Matrix	Dead Time Insertion (DTI)	SWAP	Pattern Generation
0	4	8	24-bit	Yes	Yes	Yes	Yes	Yes	Yes
1	2	4	24-bit	Yes	Yes	-	-	-	Yes
2	2	2	16-bit	Yes	-	-	-	-	-
3	4	8	24-bit	Yes	Yes	Yes	Yes	Yes	Yes

Note: The number of CC registers (CC_NUM) for each TCC corresponds to the number of compare/capture channels, hence a TCC can have more Waveform Outputs (WO_NUM) than the CC registers.

Downloaded from Arrow.com.

8. Power Supply and Start-Up Considerations

8.1 Power Domain Overview

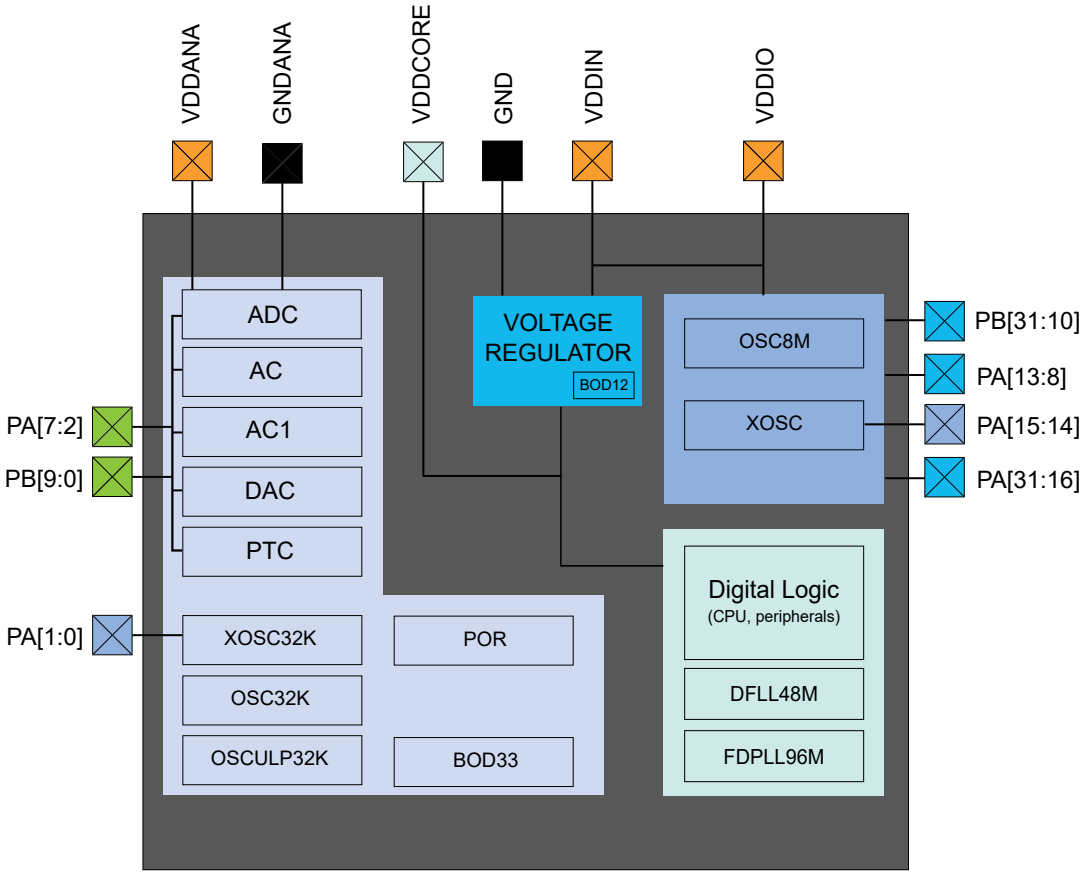

8.2 Power Supply Considerations

8.2.1 Power Supplies

The device has several different power supply pins:

- VDDIO: Powers I/O lines, OSC8M and XOSC. Voltage is 1.62V to 3.63V.
- VDDIN: Powers I/O lines and the internal regulator. Voltage is 1.62V to 3.63V.
- VDDANA: Powers I/O lines and the ADC, AC, DAC, PTC, OSCULP32K, OSC32K, XOSC32K. Voltage is 1.62V to 3.63V.
- VDDCORE: Internal regulated voltage output. Powers the core, memories, peripherals, FDPLL96M, and DFLL48M. Voltage is 1.2V.

The same voltage must be applied to both VDDIN, VDDIO and VDDANA. This common voltage is referred to as V_{DD} in the datasheet.

The ground pins, GND, are common to VDDCORE, VDDIO and VDDIN. The ground pin for VDDANA is GNDANA.

For decoupling recommendations for the different power supplies. Refer to *Schematic Checklist* for details.

Related Links

45. Schematic Checklist

Downloaded from Arrow.com.

8.2.2 Voltage Regulator

The voltage regulator has two different modes:

- Normal mode: To be used when the CPU and peripherals are running
- Low Power (LP) mode: To be used when the regulator draws small static current. It can be used in standby mode

8.2.3 Typical Powering Schematics

The device uses a single main supply with a range of 1.62V - 3.63V.

The following figure shows the recommended power supply connection.

Figure 8-1. Power Supply Connection

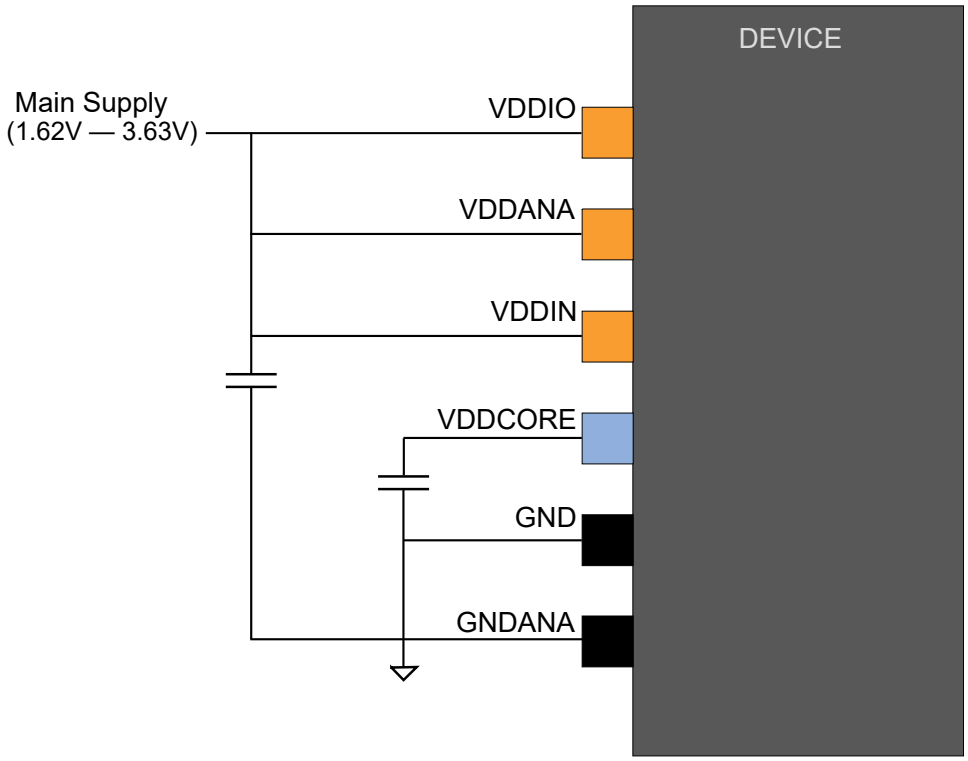

8.2.4 Power-Up Sequence

8.2.4.1 Minimum Rise Rate

The integrated Power-on Reset (POR) circuitry monitoring the VDDANA power supply requires a minimum rise rate. Refer to the *Electrical Characteristics* for details.

Related Links

37. Electrical Characteristics at 85°C

8.2.4.2 Maximum Rise Rate

The rise rate of the power supply must not exceed the values described in Electrical Characteristics. Refer to the *Electrical Characteristics* for details.

Related Links

37. Electrical Characteristics at 85°C

Downloaded from Arrow.com.

8.3 Power-Up

This section summarizes the power-up sequence of the device. The behavior after power-up is controlled by the Power Manager. Refer to *PM – Power Manager* for details.

Related Links

16. PM – Power Manager

8.3.1 Starting of Clocks

After power-up, the device is set to its initial state and kept in reset, until the power has stabilized throughout the device. Once the power has stabilized, the device will use a 1MHz clock. This clock is derived from the 8MHz Internal Oscillator (OSC8M), which is divided by eight and used as a clock source for generic clock generator 0. Generic clock generator 0 is the main clock for the Power Manager (PM).

Some synchronous system clocks are active, allowing software execution.

Refer to the “Clock Mask Register” section in *PM – Power Manager* for the list of default peripheral clocks running. Synchronous system clocks that are running are by default not divided and receive a 1MHz clock through generic clock generator 0. Other generic clocks are disabled except GCLK_WDT, which is used by the Watchdog Timer (WDT).

Related Links

16. PM – Power Manager

8.3.2 I/O Pins

After power-up, the I/O pins are tri-stated.

8.3.3 Fetching of Initial Instructions

After reset has been released, the CPU starts fetching PC and SP values from the reset address, which is 0x00000000. This address points to the first executable address in the internal Flash. The code read from the Internal Flash is free to configure the clock system and clock sources. Refer to *PM – Power Manager*, *GCLK – Generic Clock Controller* and *SYSCTRL – System Controller* for details. Refer to the ARM Architecture Reference Manual for more information on CPU startup (http://www.arm.com).

Related Links

16. PM – Power Manager
17. SYSCTRL – System Controller
14. Clock System

8.4 Power-On Reset and Brown-Out Detector

The SAM D21 embeds three features to monitor, warn and/or reset the device:

- POR: Power-On Reset on VDDANA
- BOD33: Brown-Out Detector on VDDANA
- BOD12: Voltage Regulator Internal Brown-Out Detector on VDDCORE. The Voltage Regulator Internal BOD is calibrated in production and its calibration configuration is stored in the NVM User Row. This configuration should not be changed if the user row is written to assure the correct behavior of the BOD12.

8.4.1 Power-On Reset on VDDANA

POR monitors VDDANA. It is always activated and monitors voltage at startup and also during all the sleep modes. If VDDANA goes below the threshold voltage, the entire chip is reset.

8.4.2 Brown-Out Detector on VDDANA

BOD33 monitors VDDANA. Refer to *SYSCTRL – System Controller* for details.

Related Links

17. SYSCTRL – System Controller

Downloaded from Arrow.com.

8.4.3 Brown-Out Detector on VDDCORE

Once the device has started up, BOD12 monitors the internal VDDCORE.

Downloaded from Arrow.com.

9. Product Mapping

Figure 9-1. SAM D21 Product Mapping

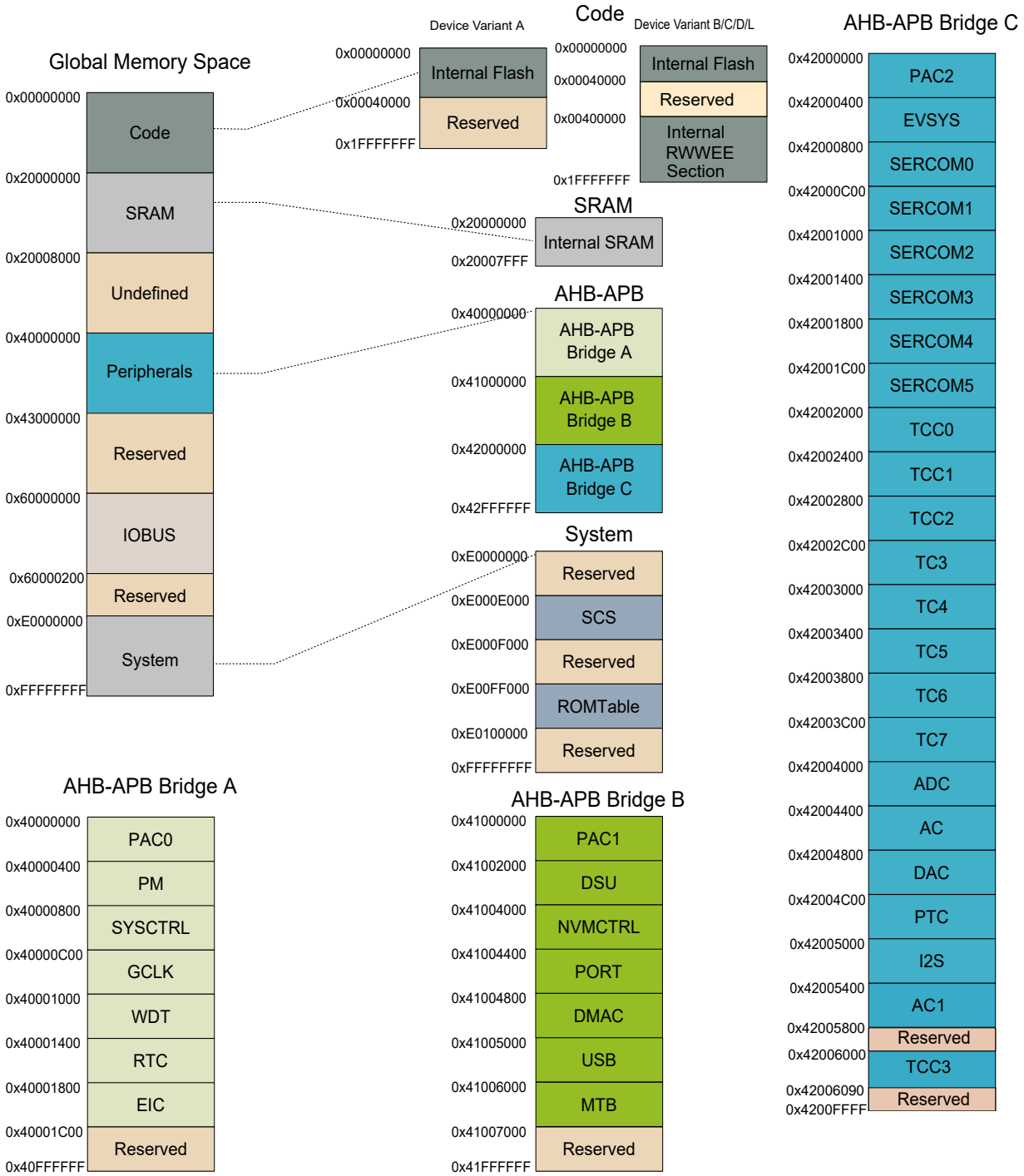

Downloaded from Arrow.com.

This figure represents the full configuration of the SAM D21 with maximum Flash and SRAM capabilities and a full set of peripherals. Refer to the 2. Configuration Summary for details.

Downloaded from Arrow.com.

10. Memories

10.1 Embedded Memories

- Internal high-speed Flash
- Read-While-Write EEPROM Emulation (RWWEE, standing for Read (the main array) while Write (the EEPROM Emulation)) (Only available on device variant B, C, D, and L)
- Internal high-speed RAM, single-cycle access at full speed

10.2 Physical Memory Map

The High-Speed bus is implemented as a bus matrix. All High-Speed bus addresses are fixed, and they are never remapped in any way, even during boot. The 32-bit physical address space is mapped as follow:

Table 10-1. SAM D21 Physical Memory Map(1)(1)

Memory	Start address	Size					
		SAMD21x18	SAMD21x17	SAMD21x16	SAMD21x15	SAMD21x16L	SAMD21x15L
Internal Flash	0x00000000	256 Kbytes	128 Kbytes	64 Kbytes	32 Kbytes	64 Kbytes	32 Kbytes
Internal RWWEE Emulation section(2)	0x00400000	-	4 Kbytes	2 Kbytes	1 Kbytes	2 Kbytes	1 Kbytes
Internal SRAM	0x20000000	32 Kbytes	16 Kbytes	8 Kbytes	4 Kbytes	8 Kbytes	4 Kbytes
Peripheral Bridge A	0x40000000	64 Kbytes	64 Kbytes	64 Kbytes	64 Kbytes	64 Kbytes	64 Kbytes
Peripheral Bridge B	0x41000000	64 Kbytes	64 Kbytes	64 Kbytes	64 Kbytes	64 Kbytes	64 Kbytes
Peripheral Bridge C	0x42000000	64 Kbytes	64 Kbytes	64 Kbytes	64 Kbytes	64 Kbytes	64 Kbytes
IOBUS	0x60000000	0.5 Kbytes	0.5 Kbytes	0.5 Kbytes	0.5 Kbytes	0.5 Kbytes	0.5 Kbytes

Table 10-2. SAM DA1 Physical memory map(1)

Memory	Start Address	Size		
		SAMDA1x16	SAMDA1x15	SAMDA1x14
Internal Flash	0x00000000	64Kbytes	32Kbytes	16Kbytes
Internal RWWEE Emulation section	0x00400000	2Kbytes	1Kbytes	512bytes
Internal SRAM	0x20000000	8Kbytes	4Kbytes	4Kbytes
Peripheral Bridge A	0x40000000	64Kbytes	64Kbytes	64Kbytes
Peripheral Bridge B	0x41000000	64Kbytes	64Kbytes	64Kbytes
Peripheral Bridge C	0x42000000	64Kbytes	64Kbytes	64Kbytes

Notes:

1. x = G, J, or E.
2. Only applicable for device variants B, C, D, and L.

Downloaded from Arrow.com.

Table 10-3. SAM D21 Flash Memory Parameters(1,2)(1)

Device	Flash size	Number of pages	Page size
SAMD21x18	256 Kbytes	4096	64 bytes
SAMD21x17	128 Kbytes	2048	64 bytes
SAMD21x16	64 Kbytes	1024	64 bytes
SAMD21x15	32 Kbytes	512	64 bytes

Table 10-4. SAM DA1 Flash memory parameters(1)

Device	Flash Size	Number of Pages	Page Size
SAMDA1x16	64Kbytes	1024	64 bytes
SAMDA1x15	32Kbytes	512	64 bytes
SAMDA1x14	16Kbytes	256	64 bytes

Notes:

1. x = G, J, or E.

2. The number of pages (NVMP) and page size (PSZ) can be read from the NVM Pages and Page Size bits in the NVM Parameter register in the NVMCTRL (PARAM.NVMP and PARAM.PSZ, respectively). Refer to *NVM Parameter* (PARAM) register for details.

Table 10-5. SAM D21 RWWEE Emulation Section Parameters (Device Variants B, C, D,and L)

Device(1)	Flash size	Number of pages	Page size
SAMD21x17	4 Kbytes	64	64 bytes
SAMD21x16	2 Kbytes	32	64 bytes
SAMD21x15	1 Kbytes	16	64 bytes

Table 10-6. SAM DA1 RWWEE Emulation Section Parameters

Device	Flash Size	Number of Pages	Page Size
SAMDA1x16	2Kbytes	32	64 bytes
SAMDA1x15	1Kbytes	16	64 bytes
SAMDA1x14	512 bytes	8	64 bytes

Note:

1. x = G, J, or E.

Related Links

22.8.3 PARAM

3. SAM D21 Ordering Information(1)

10.3 NVM Calibration and Auxiliary Space

The device calibration data are stored in different sections of the NVM calibration and auxiliary space presented in the following figure.

Downloaded from Arrow.com.

Figure 10-1. Calibration and Auxiliary Space

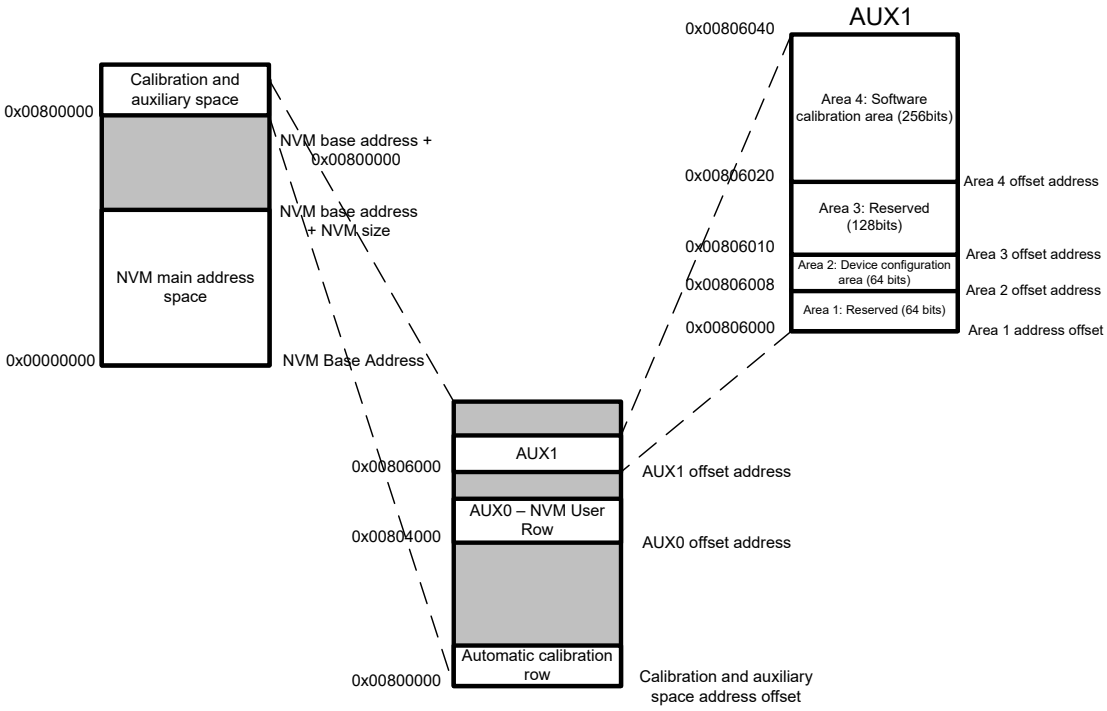

The values from the automatic calibration row are loaded into their respective registers at startup.

10.3.1 NVM User Row Mapping

The first two 32-bit words of the NVM User Row contain calibration data that are automatically read at device power on.

The NVM User Row can be read at address 0x804000.

To write the NVM User Row refer to *NVMCTRL – Non-Volatile Memory Controller*.

When writing to the user row the values do not get loaded by the other modules on the device until a device reset occurs.

Table 10-7. NVM User Row Mapping

Bit Position	Name	Usage
2:0	BOOTPROT	Used to select one of eight different bootloader sizes. Refer to “NVMCTRL – Non-Volatile Memory Controller”. Default value = 7 except for WLCSP (Default value = 3).
3	Reserved	
6:4	EEPROM	Used to select one of eight different EEPROM Emulation sizes. Refer to “NVMCTRL – Non-Volatile Memory Controller”. Default value = 7.
7	Reserved	
13:8	BOD33 Level	BOD33 Threshold Level at power on. Refer to the SYSCTRL BOD33 register. Default value = 0x7 (non-AECQ100) Default value = 0x22 (AECQ100)
14	BOD33 Enable	BOD33 enable at power on. Refer to the SYSCTRL BOD33 register. Default value = 1.

Downloaded from Arrow.com.

.....continued		
Bit Position	**Name**	**Usage**
16:15	BOD33 Action	BOD33 Action at power on. Refer to the SYSCTRL BOD33 register. Default value = 1.
24:17	Reserved	Voltage Regulator Internal BOD (BOD12) configuration. These bits are written in production and must not be changed. Default value = 0x70.
25	WDT Enable	WDT Enable at power on. Refer to the WDT CTRL register. Default value = 0.
26	WDT Always-On	WDT Always-On at power on. Refer to the WDT CTRL register. Default value = 0.
30:27	WDT Period	WDT Period at power on. Refer to the WDT CONFIG register. Default value = 0x0B.
34:31	WDT Window	WDT Window mode time-out at power on. Refer to the WDT CONFIG register. Default value = 0x05.
38:35	WDT EWOFFSET	WDT Early Warning Interrupt Time Offset at power on. Refer to the WDT EWCTRL register. Default value = 0x0B.
39	WDT WEN	WDT Timer Window Mode Enable at power on. Refer to the WDT CTRL register. Default value = 0.
40	BOD33 Hysteresis	BOD33 Hysteresis configuration at power on. Refer to the SYSCTRL BOD33 register. Default value = 0.
41	Reserved	Voltage Regulator Internal BOD(BOD12) configuration. This bit is written in production and must not be changed. Default value = 0.
47:42	Reserved	
63:48	LOCK	NVM Region Lock Bits. Refer to “NVMCTRL – Non-Volatile Memory Controller”. Default value = 0xFFFF.

Related Links

22. Nonvolatile Memory Controller (NVMCTRL)
17.8.14 BOD33
18.8.1 CTRL

10.3.2 NVM Software Calibration Area Mapping

The NVM Software Calibration Area contains calibration data that are measured and written during production test. These calibration values should be read by the application software and written back to the corresponding register.

The NVM Software Calibration Area can be read at address 0x806020.

The NVM Software Calibration Area can not be written.

Table 10-8. NVM Software Calibration Area Mapping

Bit Position	Name	Description
2:0	Reserved	
14:3	Reserved	
26:15	Reserved	
34:27	ADC LINEARITY	ADC Linearity Calibration. Should be written to ADC CALIB register.
37:35	ADC BIASCAL	ADC Bias Calibration. Should be written to ADC CALIB register.

Downloaded from Arrow.com.

.....continued		
Bit Position	**Name**	**Description**
44:38	OSC32K CAL	OSC32KCalibration. Should be written to SYSCTRL OSC32K register.
49:45	USB TRANSN	USB TRANSN calibration value. Should be written to USB PADCAL register.
54:50	USB TRANSP	USB TRANSP calibration value. Should be written to USB PADCAL register.
57:55	USB TRIM	USB TRIM calibration value. Should be written to the USB PADCAL register.
63:58	DFLL48M COARSE CAL	DFLL48M Coarse calibration value. Should be written to SYSCTRL DFLLVAL register.
73:64	Reserved	
127:74	Reserved	

10.3.3 Serial Number

Each device has a unique 128-bit serial number which is a concatenation of four 32-bit words contained at the following addresses:

Word 0: 0x0080A00C

Word 1: 0x0080A040

Word 2: 0x0080A044

Word 3: 0x0080A048

The uniqueness of the serial number is guaranteed only when using all 128 bits.

Downloaded from Arrow.com.

11. Processor And Architecture

11.1 Cortex M0+ Processor

The SAM D21 implements the ARM® Cortex®-M0+ processor, based on the ARMv6 Architecture and Thumb®-2 ISA. The Cortex M0+ is 100% instruction set compatible with its predecessor, the Cortex-M0 core, and upward compatible to Cortex-M3 and M4 cores. The ARM Cortex-M0+ implemented is revision r0p1. For more information refer to www.arm.com.

11.1.1 Cortex M0+ Configuration

Table 11-1. Cortex M0+ Configuration

Features	Configurable option	Device configuration
Interrupts	External interrupts 0-32	28
Data endianness	Little-endian or big-endian	Little-endian
SysTick timer	Present or absent	Present
Number of watchpoint comparators	0, 1, 2	2
Number of breakpoint comparators	0, 1, 2, 3, 4	4
Halting debug support	Present or absent	Present
Multiplier	Fast or small	Fast (single cycle)
Single-cycle I/O port	Present or absent	Present
Wake-up interrupt controller	Supported or not supported	Not supported
Vector Table Offset Register	Present or absent	Present
Unprivileged/Privileged support	Present or absent	Absent(1)
Memory Protection Unit	Not present or 8-region	Not present
Reset all registers	Present or absent	Absent
Instruction fetch width	16-bit only or mostly 32-bit	32-bit

Note:

1. All software run in Privileged mode only.

The ARM Cortex-M0+ core has the following two bus interfaces:

- Single 32-bit AMBA-3 AHB-Lite system interface that provides connections to peripherals and all system memory, which includes Flash and RAM.
- Single 32-bit I/O port bus interfacing to the PORT with 1-cycle loads and stores.

11.1.2 Cortex-M0+ Peripherals

- System Control Space (SCS)
  - The processor provides debug through registers in the SCS. Refer to the Cortex-M0+ Technical Reference Manual for details (www.arm.com).
- System Timer (SysTick)
  - The System Timer is a 24-bit timer clocked by CLK_CPU that extends the functionality of both the processor and the NVIC. Refer to the Cortex-M0+ Technical Reference Manual for details (www.arm.com).
- Nested Vectored Interrupt Controller (NVIC)
  - External interrupt signals connect to the NVIC, and the NVIC prioritizes the interrupts. Software can set the priority of each interrupt. The NVIC and the Cortex-M0+ processor core are closely coupled, providing low

Downloaded from Arrow.com.

latency interrupt processing and efficient processing of late arriving interrupts. Refer to 11.2 Nested Vector Interrupt Controller and the Cortex-M0+ Technical Reference Manual for details (www.arm.com).

- System Control Block (SCB)
  - The System Control Block provides system implementation information, and system control. This includes configuration, control, and reporting of the system exceptions. Refer to the Cortex-M0+ Devices Generic User Guide for details (www.arm.com).
- Micro Trace Buffer (MTB)
  - The CoreSight MTB-M0+ (MTB) provides a simple execution trace capability to the Cortex-M0+ processor. Refer to section 11.3 Micro Trace Buffer and the CoreSight MTB-M0+ Technical Reference Manual for details (www.arm.com).

11.1.3 Cortex-M0+ Address Map

Table 11-2. Cortex-M0+ Address Map

Address	Peripheral
0xE000E000	System Control Space (SCS)
0xE000E010	System Timer (SysTick)
0xE000E100	Nested Vectored Interrupt Controller (NVIC)
0xE000ED00	System Control Block (SCB)
0x41006000 (see also Product Mapping)	Micro Trace Buffer (MTB)

11.1.4 I/O Interface

11.1.4.1 Overview

Because accesses to the AMBA® AHB-Lite™ and the single cycle I/O interface can be made concurrently, the Cortex-M0+ processor can fetch the next instructions while accessing the I/Os. This enables single cycle I/O accesses to be sustained for as long as needed. Refer to *CPU Local Bus* for more information.

Related Links

23.5.10 CPU Local Bus

11.1.4.2 Description

Direct access to PORT registers.

11.2 Nested Vector Interrupt Controller

11.2.1 Overview

The Nested Vectored Interrupt Controller (NVIC) in the SAM D21 supports 32 interrupt lines with four different priority levels. For more details, refer to the Cortex-M0+ Technical Reference Manual (www.arm.com).

11.2.2 Interrupt Line Mapping

Each of the 29 interrupt lines is connected to one peripheral instance, as shown in the table below. Each peripheral can have one or more interrupt flags, located in the peripheral's Interrupt Flag Status and Clear (INTFLAG) register. The Interrupt flag is set when the Interrupt condition occurs. Each interrupt in the peripheral can be individually enabled by writing a one to the corresponding bit in the peripheral's Interrupt Enable Set (INTENSET) register, and disabled by writing a one to the corresponding bit in the peripheral's Interrupt Enable Clear (INTENCLR) register. An interrupt request is generated from the peripheral when the Interrupt flag is set and the corresponding interrupt is enabled. The interrupt requests for one peripheral are ORed together on system level, generating one interrupt request for each peripheral. An interrupt request will set the corresponding Interrupt Pending bit in the NVIC Interrupt Pending registers (SETPEND/CLRPEND bits in ISPR/ICPR). For the NVIC to activate the interrupt, it must be enabled in the NVIC interrupt enable register (SETENA/CLRENA bits in ISER/ICER). The NVIC Interrupt Priority registers IPR0-IPR7 provide a priority field for each interrupt.

Downloaded from Arrow.com.

Table 11-3. Interrupt Line Mapping

Peripheral Source	NVIC Line
EIC NMI – External Interrupt Controller	NMI
PM – Power Manager	0
SYSCTRL – System Control	1
WDT – Watchdog Timer	2
RTC – Real-Time Counter	3
EIC – External Interrupt Controller	4
NVMCTRL – Nonvolatile Memory Controller	5
DMAC - Direct Memory Access Controller	6
USB - Universal Serial Bus	7
EVSYS – Event System	8
SERCOM0 – Serial Communication Interface 0	9
SERCOM1 – Serial Communication Interface 1	10
SERCOM2 – Serial Communication Interface 2	11
SERCOM3 – Serial Communication Interface 3	12
SERCOM4 – Serial Communication Interface 4	13
SERCOM5 – Serial Communication Interface 5	14
TCC0 – Timer Counter for Control 0	15
TCC1 – Timer Counter for Control 1	16
TCC2 – Timer Counter for Control 2	17
TC3 – Timer Counter 3	18
TC4 – Timer Counter 4	19
TC5 – Timer Counter 5	20
TC6 – Timer Counter 6	21
TC7 – Timer Counter 7	22
ADC – Analog-to-Digital Converter	23
AC – Analog Comparator	24
DAC – Digital-to-Analog Converter	25
PTC – Peripheral Touch Controller	26
I2S - Inter IC Sound	27
AC1 - Analog Comparator 1	28
TCC3 - Timer Counter for Control 3	29

© 2021 Microchip Technology Inc.
and its subsidiaries

Downloaded from Arrow.com.

11.3 Micro Trace Buffer

11.3.1 Features

- Program flow tracing for the Cortex-M0+ processor
- MTB SRAM can be used for both trace and general purpose storage by the processor
- The position and size of the trace buffer in SRAM is configurable by software
- CoreSight compliant

11.3.2 Overview

When enabled, the MTB records changes in program flow, reported by the Cortex-M0+ processor over the execution trace interface shared between the Cortex-M0+ processor and the CoreSight MTB-M0+. This information is stored as trace packets in the SRAM by the MTB. An off-chip debugger can extract the trace information using the Debug Access Port to read the trace information from the SRAM. The debugger can then reconstruct the program flow from this information.

The MTB simultaneously stores trace information into the SRAM, and gives the processor access to the SRAM. The MTB ensures that trace write accesses have priority over processor accesses.

The execution trace packet consists of a pair of 32-bit words that the MTB generates when it detects the processor PC value changes non-sequentially. A non-sequential PC change can occur during branch instructions or during exception entry. See the CoreSight MTB-M0+ Technical Reference Manual for more details on the MTB execution trace packet format.

Tracing is enabled when the MASTER.EN bit in the Master Trace Control register is 1. There are various ways to set the bit to 1 to start tracing, or to 0 to stop tracing. See the CoreSight Cortex-M0+ Technical Reference Manual for more details on the trace start and stop and for a detailed description of the MTB's MASTER register. The MTB can be programmed to stop tracing automatically when the memory fills to a specified watermark level or to start or stop tracing by writing directly to the MASTER.EN bit. If the watermark mechanism is not being used and the trace buffer overflows, then the buffer wraps around overwriting previous trace packets.

The base address of the MTB registers is 0x41006000; this address is also written in the CoreSight ROM Table. The offset of each register from the base address is fixed and as defined by the CoreSight MTB-M0+ Technical Reference Manual. The MTB has four programmable registers to control the behavior of the trace features:

- POSITION: Contains the trace Write Pointer and the wrap bit,
- MASTER: Contains the main trace enable bit and other trace control fields,
- FLOW: Contains the WATERMARK address and the AUTOSTOP and AUTOHALT control bits,
- BASE: Indicates where the SRAM is located in the processor memory map. This register is provided to enable auto-discovery of the MTB SRAM location, by a debug agent.

See the CoreSight MTB-M0+ Technical Reference Manual for a detailed description of these registers.

11.4 High-Speed Bus System

11.4.1 Features

High-Speed Bus Matrix has the following features:

- Symmetric crossbar bus switch implementation
- Allows concurrent accesses from different hosts to different clients
- 32-bit data bus
- Operation at a one-to-one clock frequency with the bus hosts

Downloaded from Arrow.com.

11.4.2 Configuration

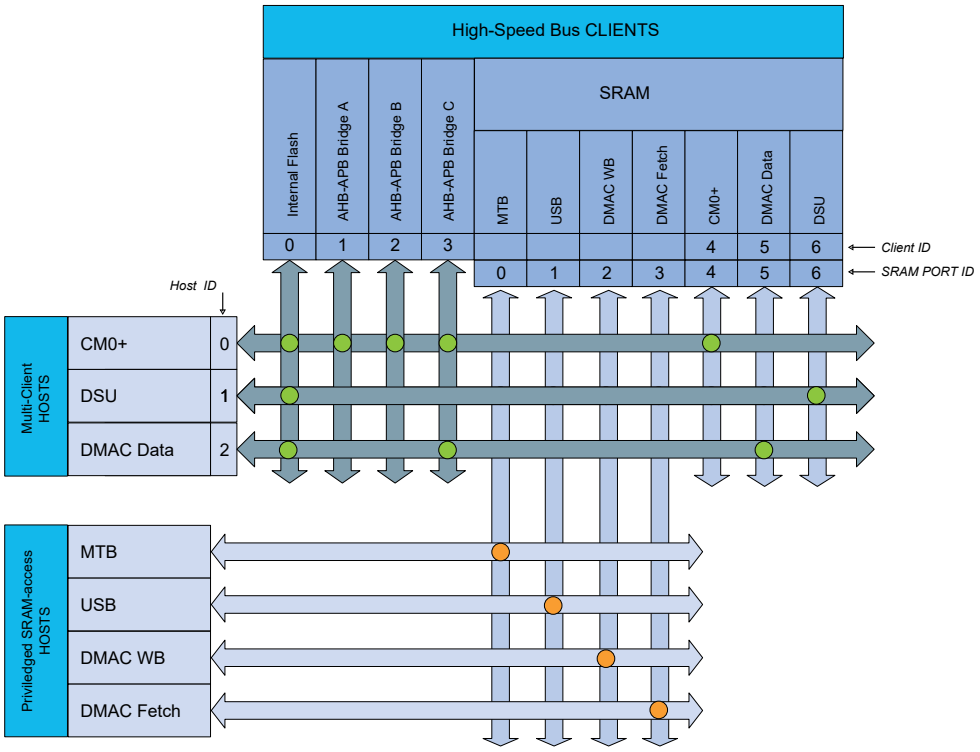

Table 11-4. Bus Matrix Hosts

Bus Matrix Hosts	Host ID
CM0+ - Cortex M0+ Processor	0
DSU - Device Service Unit	1
DMAC - Direct Memory Access Controller - Data Access	2

Table 11-5. Bus Matrix Clients

Bus Matrix Clients	Client ID
Internal Flash Memory	0
AHB-APB Bridge A	1
AHB-APB Bridge B	2
AHB-APB Bridge C	3
SRAM Port 4 - CM0+ Access	4
SRAM Port 5 - DMAC Data Access	5
SRAM Port 6 - DSU Access	6

Downloaded from Arrow.com.

Table 11-6. SRAM Port Connection

SRAM Port Connection	Port ID	Connection Type
MTB - Micro Trace Buffer	0	Direct
USB - Universal Serial Bus	1	Direct
DMAC - Direct Memory Access Controller - Write-Back Access	2	Direct
DMAC - Direct Memory Access Controller - Fetch Access	3	Direct
CM0+ - Cortex M0+ Processor	4	Bus Matrix
DMAC - Direct Memory Access Controller - Data Access	5	Bus Matrix
DSU - Device Service Unit	6	Bus Matrix

11.4.3 SRAM Quality of Service

To ensure that hosts with latency requirements get sufficient priority when accessing RAM, the different hosts can be configured to have a given priority for different type of access.

The Quality of Service (QoS) level is independently selected for each host accessing the RAM. For any access to the RAM the RAM also receives the QoS level. The QoS levels and their corresponding bit values for the QoS level configuration is shown in the following table.

Table 11-7. Quality of Service

Value	Name	Description
00	DISABLE	Background (no sensitive operation)
01	LOW	Sensitive Bandwidth
10	MEDIUM	Sensitive Latency
11	HIGH	Critical Latency

If a host is configured with QoS level 0x00 or 0x01 there will be minimum one cycle latency for the RAM access.

The priority order for concurrent accesses are decided by two factors. First the QoS level for the host and then a static priority given by the SRAM Port Connection table where the lowest port ID has the highest static priority.

The MTB has fixed QoS level 3 and the DSU has fixed QoS level 1.

The CPU QoS level can be written/read at address 0x41007120, bits [1:0]. Its reset value is 0x2.

Refer to different host QOSCTRL registers for configuring QoS for the other hosts (USB, DMAC).

11.5 AHB-APB Bridge

The AHB-APB bridge is an AHB client, providing an interface between the high-speed AHB domain and the low-power APB domain. It is used to provide access to the Programmable Control registers of peripherals.

AHB-APB bridge is based on AMBA APB Protocol Specification V2.0 (ref. as APB4) including:

- Wait state support
- Error reporting
- Transaction protection
- Sparse data transfer (byte, half-word and word)

Additional enhancements:

- Address and data cycles merged into a single cycle
- Sparse data transfer also apply to read access

Downloaded from Arrow.com.

To operate the AHB-APB bridge, the clock (CLK_HPBx_AHB) must be enabled. See *PM – Power Manager* for details.

Figure 11-1. APB Write Access

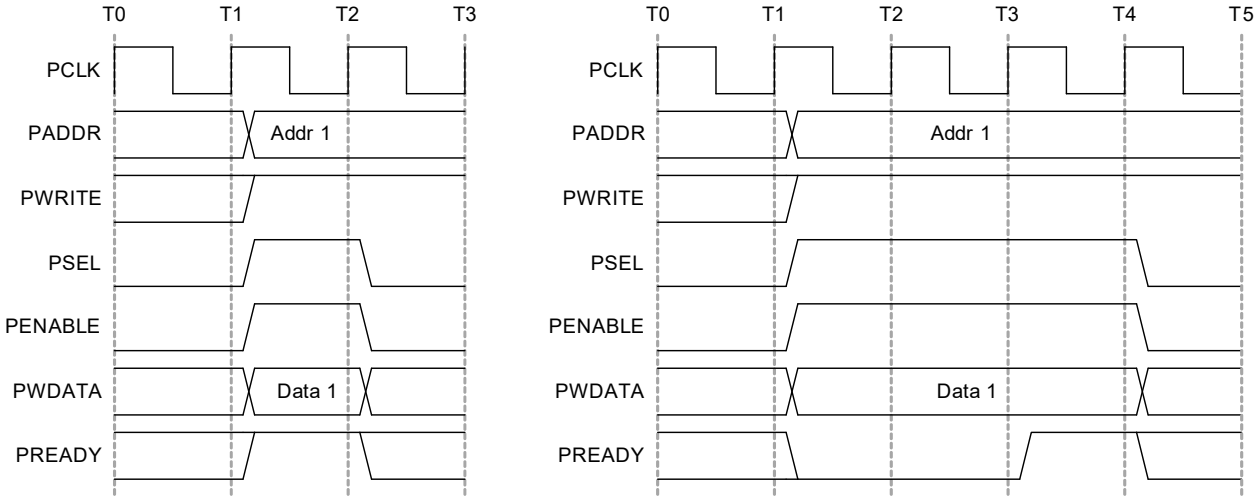

Figure 11-2. APB Read Access

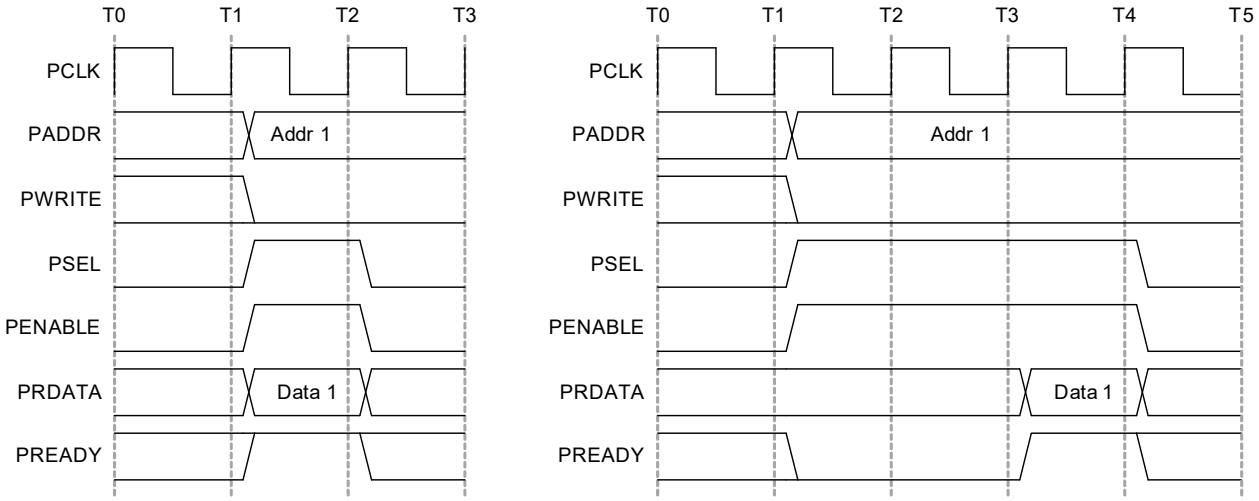

Related Links

16. PM – Power Manager

9. Product Mapping

11.6 Peripheral Access Controller (PAC)

11.6.1 Overview

One PAC is associated with each AHB-APB bridge and the PAC can provide write protection for registers of each peripheral connected on the same bridge.

The PAC peripheral bus clock (CLK_PACx_APB) can be enabled and disabled in the Power Manager. CLK_PAC0_APB and CLK_PAC1_APB are enabled are reset. CLK_PAC2_APB is disabled at reset. Refer to *PM – Power Manager* for details. The PAC will continue to operate in any Sleep mode where the selected clock source is running. Write-protection does not apply for debugger access. When the debugger makes an access to a peripheral, write-protection is ignored so that the debugger can update the register.

Downloaded from Arrow.com.

Write-protect registers allow the user to disable a selected peripheral's write-protection without doing a read-modify-write operation. These registers are mapped into two I/O memory locations, one for clearing and one for setting the register bits. Writing a one to a bit in the Write Protect Clear register (WPCLR) will clear the corresponding bit in both registers (WPCLR and WPSET) and disable the write-protection for the corresponding peripheral, while writing a one to a bit in the Write Protect Set (WPSET) register will set the corresponding bit in both registers (WPCLR and WPSET) and enable the write-protection for the corresponding peripheral. Both registers (WPCLR and WPSET) will return the same value when read.

If a peripheral is write-protected, and if a write access is performed, data will not be written, and the peripheral will return an access error (CPU exception).

The PAC also offers a safety feature for correct program execution, with a CPU exception generated on double write-protection or double unprotection of a peripheral. If a peripheral n is write-protected and a write to one in WPSET[n] is detected, the PAC returns an error. This can be used to ensure that the application follows the intended program flow by always following a write-protect with an unprotect, and vice versa. However, in applications where a write-protected peripheral is used in several contexts, for example, interrupts, care should be taken so that either the interrupt can not happen while the main application or other interrupt levels manipulate the write-protection status, or when the interrupt handler needs to unprotect the peripheral, based on the current protection status, by reading WPSET.

Related Links

16. PM – Power Manager

11.6.2 Register Description

Atomic 8-, 16- and 32-bit accesses are supported. In addition, the 8-bit quarters and 16-bit halves of a 32-bit register, and the 8-bit halves of a 16-bit register can be accessed directly. Refer to the Product Mapping for PAC locations.

11.6.2.1 PAC0 Register Description

Downloaded from Arrow.com.

11.6.2.1.1 Write Protect Clear

Name: WPCLR
Offset: 0x00
Reset: 0x000000
Property: –

Bit	31	30	29	28	27	26	25	24
Access								
Reset								

Bit	23	22	21	20	19	18	17	16
Access								
Reset								

Bit	15	14	13	12	11	10	9	8
Access								
Reset								

Bit	7	6	5	4	3	2	1	0
		EIC	RTC	WDT	GCLK	SYSCTRL	PM	
Access		R/W	R/W	R/W	R/W	R/W	R/W	
Reset		0	0	0	0	0	0	

Bit 6 – EIC
Writing a zero to these bits has no effect.
Writing a one to these bits will clear the Write Protect bit for the corresponding peripherals.

Value	Description
0	Write-protection is disabled.
1	Write-protection is enabled.

Bit 5 – RTC
Writing a zero to these bits has no effect.
Writing a one to these bits will clear the Write Protect bit for the corresponding peripherals.

Value	Description
0	Write-protection is disabled.
1	Write-protection is enabled.

Bit 4 – WDT
Writing a zero to these bits has no effect.
Writing a one to these bits will clear the Write Protect bit for the corresponding peripherals.

Value	Description
0	Write-protection is disabled.
1	Write-protection is enabled.

Bit 3 – GCLK
Writing a zero to these bits has no effect.
Writing a one to these bits will clear the Write Protect bit for the corresponding peripherals.

Value	Description
0	Write-protection is disabled.
1	Write-protection is enabled.

Downloaded from Arrow.com.

Bit 2 – SYSCTRL

Writing a zero to these bits has no effect.
Writing a one to these bits will clear the Write Protect bit for the corresponding peripherals.

Value	Description
0	Write-protection is disabled.
1	Write-protection is enabled.

Bit 1 – PM

Writing a zero to these bits has no effect.
Writing a one to these bits will clear the Write Protect bit for the corresponding peripherals.

Value	Description
0	Write-protection is disabled.
1	Write-protection is enabled.

Downloaded from Arrow.com.

11.6.2.1.2 Write-Protect Set

Name: WPSET
Offset: 0x04
Reset: 0x000000
Property: –

Bit	31	30	29	28	27	26	25	24
Access								
Reset								

Bit	23	22	21	20	19	18	17	16
Access								
Reset								

Bit	15	14	13	12	11	10	9	8
Access								
Reset								

Bit	7	6	5	4	3	2	1	0
		EIC	RTC	WDT	GCLK	SYSCTRL	PM	
Access		R/W	R/W	R/W	R/W	R/W	R/W	
Reset		0	0	0	0	0	0	

Bit 6 – EIC
Writing a zero to these bits has no effect.
Writing a one to these bits will set the Write-Protect bit for the corresponding peripherals.

Value	Description
0	Write protection is disabled
1	Write protection is enabled

Bit 5 – RTC
Writing a zero to these bits has no effect.
Writing a one to these bits will set the Write-Protect bit for the corresponding peripherals.

Value	Description
0	Write protection is disabled
1	Write protection is enabled

Bit 4 – WDT
Writing a zero to these bits has no effect.
Writing a one to these bits will set the Write-Protect bit for the corresponding peripherals.

Value	Description
0	Write protection is disabled
1	Write protection is enabled

Bit 3 – GCLK
Writing a zero to these bits has no effect.
Writing a one to these bits will set the Write-Protect bit for the corresponding peripherals.

Value	Description
0	Write protection is disabled
1	Write protection is enabled

Downloaded from Arrow.com.

Bit 2 – SYSCTRL
Writing a zero to these bits has no effect.
Writing a one to these bits will set the Write-Protect bit for the corresponding peripherals.

Value	Description
0	Write protection is disabled
1	Write protection is enabled

Bit 1 – PM
Writing a zero to these bits has no effect.
Writing a one to these bits will set the Write-Protect bit for the corresponding peripherals.

Value	Description
0	Write protection is disabled
1	Write protection is enabled

11.6.2.2 PAC1 Register Description

Downloaded from Arrow.com.

11.6.2.2.1 Write Protect Clear

Name: WPCLR
Offset: 0x00
Reset: 0x000002
Property: –

Bit	31	30	29	28	27	26	25	24
Access								
Reset								

Bit	23	22	21	20	19	18	17	16
Access								
Reset								

Bit	15	14	13	12	11	10	9	8
Access								
Reset								

Bit	7	6	5	4	3	2	1	0
		MTB	USB	DMAC	PORT	NVMCTRL	DSU	
Access		R/W	R/W	R/W	R/W	R/W	R/W	
Reset		0	0	0	0	0	1	

Bit 6 – MTB
Writing a zero to these bits has no effect.
Writing a one to these bits will clear the Write Protect bit for the corresponding peripherals.

Value	Description
0	Write-protection is disabled.
1	Write-protection is enabled.

Bit 5 – USB
Writing a zero to these bits has no effect.
Writing a one to these bits will clear the Write Protect bit for the corresponding peripherals.

Value	Description
0	Write-protection is disabled.
1	Write-protection is enabled.

Bit 4 – DMAC
Writing a zero to these bits has no effect.
Writing a one to these bits will clear the Write Protect bit for the corresponding peripherals.

Value	Description
0	Write-protection is disabled.
1	Write-protection is enabled.

Bit 3 – PORT
Writing a zero to these bits has no effect.
Writing a one to these bits will clear the Write Protect bit for the corresponding peripherals.

Value	Description
0	Write-protection is disabled.
1	Write-protection is enabled.

Downloaded from Arrow.com.

Bit 2 – NVMCTRL
Writing a zero to these bits has no effect.
Writing a one to these bits will clear the Write Protect bit for the corresponding peripherals.

Value	Description
0	Write-protection is disabled.
1	Write-protection is enabled.

Bit 1 – DSU
Writing a zero to these bits has no effect.
Writing a one to these bits will clear the Write Protect bit for the corresponding peripherals.

Value	Description
0	Write-protection is disabled.
1	Write-protection is enabled.

Downloaded from Arrow.com.

11.6.2.2.2 Write-Protect Set

Name: WPSET
Offset: 0x04
Reset: 0x000002
Property: –

Bit	31	30	29	28	27	26	25	24
Access								
Reset								

Bit	23	22	21	20	19	18	17	16
Access								
Reset								

Bit	15	14	13	12	11	10	9	8
Access								
Reset								

Bit	7	6	5	4	3	2	1	0
		MTB	USB	DMAC	PORT	NVMCTRL	DSU	
Access		R/W	R/W	R/W	R/W	R/W	R/W	
Reset		0	0	0	0	0	1	

Bit 6 – MTB
Writing a zero to these bits has no effect.
Writing a one to these bits will Set the Write-Protect bit for the corresponding peripherals.

Value	Description
0	Write protection is disabled
1	Write protection is enabled

Bit 5 – USB
Writing a zero to these bits has no effect.
Writing a one to these bits will set the Write-Protect bit for the corresponding peripherals.

Value	Description
0	Write protection is disabled
1	Write protection is enabled

Bit 4 – DMAC
Writing a zero to these bits has no effect.
Writing a one to these bits will set the Write-Protect bit for the corresponding peripherals.

Value	Description
0	Write protection is disabled
1	Write protection is enabled

Bit 3 – PORT
Writing a zero to these bits has no effect.
Writing a one to these bits will set the Write-Protect bit for the corresponding peripherals.

Value	Description
0	Write protection is disabled
1	Write protection is enabled

Downloaded from Arrow.com.

Bit 2 – NVMCTRL
Writing a zero to these bits has no effect.
Writing a one to these bits will set the Write-Protect bit for the corresponding peripherals.

Value	Description
0	Write protection is disabled
1	Write protection is enabled

Bit 1 – DSU
Writing a zero to these bits has no effect.
Writing a one to these bits will set the Write-Protect bit for the corresponding peripherals.

Value	Description
0	Write protection is disabled
1	Write protection is enabled

11.6.2.3 PAC2 Register Description

Downloaded from Arrow.com.

11.6.2.3.1 Write-Protect Clear

Name: WPCLR
Offset: 0x00
Reset: 0x00800000
Property: –

Bit	31	30	29	28	27	26	25	24
								TCC3
Access								R/W
Reset								0

Bit	23	22	21	20	19	18	17	16
			AC1	I2S	PTC	DAC	AC	ADC
Access			R/W	R/W	R/W	R/W	R/W	R/W
Reset			0	0	0	0	0	0

Bit	15	14	13	12	11	10	9	8
	TC7	TC6	TC5	TC4	TC3	TCC2	TCC1	TCC0
Access	R/W	R/W	R/W	R/W	R/W	R/W	R/W	R/W
Reset	0	0	0	0	0	0	0	0

Bit	7	6	5	4	3	2	1	0
	SERCOM[5:0]						EVSYS	
Access	R/W	R/W	R/W	R/W	R/W	R/W	R/W	
Reset	0	0	0	0	0	0	0	

Bit 24 – TCC3
Writing a zero to these bits has no effect.
Writing a one to these bits will clear the Write-Protect bit for the corresponding peripherals.

Value	Description
0	Write protection is disabled
1	Write protection is enabled

Bit 21 – AC1
Writing a zero to these bits has no effect.
Writing a one to these bits will clear the Write-Protect bit for the corresponding peripherals.

Value	Description
0	Write protection is disabled
1	Write protection is enabled

Bit 20 – I2S
Writing a zero to these bits has no effect.
Writing a one to these bits will clear the Write-Protect bit for the corresponding peripherals.

Value	Description
0	Write protection is disabled
1	Write protection is enabled

Bit 19 – PTC
Writing a zero to these bits has no effect.
Writing a one to these bits will clear the Write-Protect bit for the corresponding peripherals.

Value	Description
0	Write protection is disabled
1	Write protection is enabled

Downloaded from Arrow.com.

Bit 18 – DAC
Writing a zero to these bits has no effect.
Writing a one to these bits will clear the Write-Protect bit for the corresponding peripherals.

Value	Description
0	Write protection is disabled
1	Write protection is enabled

Bit 17 – AC
Writing a zero to these bits has no effect.
Writing a one to these bits will clear the Write-Protect bit for the corresponding peripherals.

Value	Description
0	Write protection is disabled
1	Write protection is enabled

Bit 16 – ADC
Writing a zero to these bits has no effect.
Writing a one to these bits will clear the Write-Protect bit for the corresponding peripherals.

Value	Description
0	Write protection is disabled
1	Write protection is enabled

Bits 11, 12, 13, 14, 15 – TC
Writing a zero to these bits has no effect.
Writing a one to these bits will clear the Write-Protect bit for the corresponding peripherals.

Value	Description
0	Write protection is disabled
1	Write protection is enabled

Bits 8, 9, 10 – TCC
Writing a zero to these bits has no effect.
Writing a one to these bits will clear the Write-Protect bit for the corresponding peripherals.

Value	Description
0	Write protection is disabled
1	Write protection is enabled

Bits 7:2 – SERCOM[5:0]
Writing a zero to these bits has no effect.
Writing a one to these bits will clear the Write-Protect bit for the corresponding peripherals.

Value	Description
0	Write protection is disabled
1	Write protection is enabled

Bit 1 – EVSYS
Writing a zero to these bits has no effect.
Writing a one to these bits will clear the Write-Protect bit for the corresponding peripherals.

Value	Description
0	Write protection is disabled
1	Write protection is enabled

Downloaded from Arrow.com.

11.6.2.3.2 Write-Protect Set

Name: WPSET
Offset: 0x04
Reset: 0x00800000
Property: –

Bit	31	30	29	28	27	26	25	24
								TCC3
Access								R/W
Reset								0

Bit	23	22	21	20	19	18	17	16
			AC1	I2S	PTC	DAC	AC	ADC
Access			R/W	R/W	R/W	R/W	R/W	R/W
Reset			0	0	0	0	0	0

Bit	15	14	13	12	11	10	9	8
	TC7	TC6	TC5	TC4	TC3	TCC2	TCC1	TCC0
Access	R/W	R/W	R/W	R/W	R/W	R/W	R/W	R/W
Reset	0	0	0	0	0	0	0	0

Bit	7	6	5	4	3	2	1	0
	SERCOM5	SERCOM4	SERCOM3	SERCOM2	SERCOM1	SERCOM0	EVSYS	
Access	R/W	R/W	R/W	R/W	R/W	R/W	R/W	
Reset	0	0	0	0	0	0	0	

Bit 24 – TCC3
Writing a zero to these bits has no effect.
Writing a one to these bits will set the Write-Protect bit for the corresponding peripherals.

Value	Description
0	Write protection is disabled
1	Write protection is enabled

Bit 21 – AC1
Writing a zero to these bits has no effect.
Writing a one to these bits will set the Write-Protect bit for the corresponding peripherals.

Value	Description
0	Write protection is disabled
1	Write protection is enabled

Bit 20 – I2S
Writing a zero to these bits has no effect.
Writing a one to these bits will set the Write-Protect bit for the corresponding peripherals.

Value	Description
0	Write protection is disabled
1	Write protection is enabled

Bit 19 – PTC
Writing a zero to these bits has no effect.
Writing a one to these bits will set the Write-Protect bit for the corresponding peripherals.

Value	Description
0	Write protection is disabled
1	Write protection is enabled

Downloaded from Arrow.com.

Bit 18 – DAC
Writing a zero to these bits has no effect.
Writing a one to these bits will set the Write-Protect bit for the corresponding peripherals.

Value	Description
0	Write protection is disabled
1	Write protection is enabled

Bit 17 – AC
Writing a zero to these bits has no effect.
Writing a one to these bits will set the Write-Protect bit for the corresponding peripherals.

Value	Description
0	Write protection is disabled
1	Write protection is enabled

Bit 16 – ADC
Writing a zero to these bits has no effect.
Writing a one to these bits will set the Write-Protect bit for the corresponding peripherals.

Value	Description
0	Write protection is disabled
1	Write protection is enabled

Bits 11, 12, 13, 14, 15 – TC
Writing a zero to these bits has no effect.
Writing a one to these bits will set the Write-Protect bit for the corresponding peripherals.

Value	Description
0	Write protection is disabled
1	Write protection is enabled

Bits 8, 9, 10 – TCC
Writing a zero to these bits has no effect.
Writing a one to these bits will set the Write-Protect bit for the corresponding peripherals.

Value	Description
0	Write protection is disabled
1	Write protection is enabled

Bits 2, 3, 4, 5, 6, 7 – SERCOM
Writing a zero to these bits has no effect.
Writing a one to these bits will set the Write-Protect bit for the corresponding peripherals.

Value	Description
0	Write protection is disabled
1	Write protection is enabled

Bit 1 – EVSYS
Writing a zero to these bits has no effect.
Writing a one to these bits will set the Write-Protect bit for the corresponding peripherals.

Value	Description
0	Write protection is disabled
1	Write protection is enabled

11.7 Register Access and Behavior

Write protected registers, enable protected registers, and registers in sync process should not be accessed. These accesses are illegal, and an attempt to access these registers will result generation of hard fault exception.

Downloaded from Arrow.com.

12. Peripherals Configuration Summary

Table 12-1. Peripherals Configuration Summary

Periph. Name	Base Address	IRQ Line	AHB Clock Index	AHB Clock Enabled at Reset	APB Clock Index	APB Clock Enabled at Reset	Generic Clock Index	PAC Index	PAC Prot. at Reset	Events User	Events Generator	DMA Index	Sleep Walking
AHB-APB Bridge A	0x40000000		0	Y									
PAC0	0x40000000				0	Y							
PM	0x40000400	0			1	Y		1	N				Y
SYSCTRL	0x40000800	1			2	Y	0: DFLL48M reference 1: FDPLL96M clk source 2: FDPLL96M 32kHz	2	N				Y
GCLK	0x40000C00				3	Y		3	N				Y
WDT	0x40001000	2			4	Y	3	4	N				
RTC	0x40001400	3			5	Y	4	5	N		1: CMP0/ALARM0 2: CMP1 3: OVF 4-11: PER0-7		Y
EIC	0x40001800	NMI, 4			6	Y	5	6	N		12-27: EXTINT0-15		Y
AHB-APB Bridge B	0x41000000		1	Y									
PAC1	0x41000000				0	Y							
DSU	0x41002000		3	Y	1	Y		1	Y				
NVMCTRL	0x41004000	5	4	Y	2	Y		2	N				
PORT	0x41004400				3	Y		3	N				
DMAC	0x41004800	6	5	Y	4	Y		4	N	0-3: CH0-3	30-33: CH0-3		
USB	0x41005000	7	6	Y	5	Y	6	5	N				Y
MTB	0x41006000							6	N				
AHB-APB Bridge C	0x42000000		2	Y									
PAC2	0x42000000				0	N							
EVSYS	0x42000400	8			1	N	7-18: one per CHANNEL	1	N				Y
SERCOM0	0x42000800	9			2	N	20: CORE 19: SLOW	2	N			1: RX 2: TX	Y
SERCOM1	0x42000C00	10			3	N	21: CORE 19: SLOW	3	N			3: RX 4: TX	Y
SERCOM2	0x42001000	11			4	N	22: CORE 19: SLOW	4	N			5: RX 6: TX	Y
SERCOM3	0x42001400	12			5	N	23: CORE 19: SLOW	5	N			7: RX 8: TX	Y
SERCOM4	0x42001800	13			6	N	24: CORE 19: SLOW	6	N			9: RX 10: TX	Y
SERCOM5	0x42001C00	14			7	N	25: CORE 19: SLOW	7	N			11: RX 12: TX	Y
TCC0	0x42002000	15			8	N	26	8	N	4-5: EV0-1 6-9: MC0-3	34: OVF 35: TRG 36: CNT 37-40: MC0-3	13: OVF 14-17: MC0-3	Y
TCC1	0x42002400	16			9	N	26	9	N	10-11: EV0-1 12-13: MC0-1	41: OVF 42: TRG 43: CNT 44-45: MC0-1	18: OVF 19-20: MC0-1	Y
TCC2	0x42002800	17			10	N	27	10	N	14-15: EV0-1 16-17: MC0-1	46: OVF 47: TRG 48: CNT 49-50: MC0-1	21: OVF 22-23: MC0-1	Y
TC3	0x42002C00	18			11	N	27	11	N	18: EV	51: OVF 52-53: MC0-1	24: OVF 25-26: MC0-1	Y
TC4	0x42003000	19			12	N	28	12	N	19: EV	54: OVF 55-56: MCX0-1	27: OVF 28-29: MC0-1	Y

Downloaded from Arrow.com.

.....continued

Periph. Name	Base Address	IRQ Line	AHB Clock Index	AHB Clock Enabled at Reset	APB Clock Index	APB Clock Enabled at Reset	Generic Clock Index	PAC Index	PAC Prot. at Reset	Events User	Events Generator	DMA Index	Sleep Walking
TC5	0x42003400	20			13	N	28	13	N	20: EV	57: OVF 58-59: MC0-1	30: OVF 31-32: MC0-1	Y
TC6	0x42003800	21			14	N	29	14	N	21: EV	60: OVF 61-62: MC0-1	33: OVF 34-35: MC0-1	Y
TC7	0x42003C00	22			15	N	29	15	N	22: EV	63: OVF 64-65: MC0-1	36: OVF 37-38: MC0-1	Y
ADC	0x42004000	23			16	Y	30	16	N	23: START 24: SYNC	66: RESRDY 67: WINMON	39: RESRDY	Y
AC	0x42004400	24			17	N	31: DIG 32: ANA	17	N	25-26: SOC0-1	68-69: COMP0-1 70: WIN0		Y
DAC	0x42004800	25			18	N	33	18	N	27: START	71: EMPTY	40: EMPTY	Y
PTC	0x42004C00	26			19	N	34	19	N	28: STCONV	72: EOC 73: WCOMP		
I2S	0x42005000	27			20	N	35-36	20	N			41:42: RX 43:44: TX	Y
AC1	0x42005400	28			21	N	31: DIG 32: ANA	21	N	25-26: SOC0-1	68-69: COMP0-1 70: WIN0		Y
TCC3	0x42006000	29			22	N	37	24	N	31-32: EV0-1, 33-36: MC0-3	77: OVF, 78: TRG, 79 CNT, 80-83 MC	0x2D:OVF 0x2E: MC0 0x2F: MC1 0x30: MC2 0x31: MC3	Y

Downloaded from Arrow.com.

13. DSU - Device Service Unit

13.1 Overview

The Device Service Unit (DSU) provides a means of detecting debugger probes. It enables the ARM Debug Access Port (DAP) to have control over multiplexed debug pads and CPU reset. The DSU also provides system-level services to debug adapters in an ARM debug system. It implements a CoreSight Debug ROM that provides device identification as well as identification of other debug components within the system. Hence, it complies with the ARM Peripheral Identification specification. The DSU also provides system services to applications that need memory testing, as required for IEC60730 Class B compliance, for example. The DSU can be accessed simultaneously by a debugger and the CPU, as it is connected on the High-Speed Bus Matrix. For security reasons, some of the DSU features will be limited or unavailable when the device is protected by the NVMCTRL security bit.

Related Links

13.11.6 System Services Availability when Accessed Externally and Device is Protected
22. Nonvolatile Memory Controller (NVMCTRL)
22.6.6 Security Bit

13.2 Features

- CPU reset extension
- Debugger probe detection (Cold- and Hot-Plugging)
- Chip-Erase command and status
- 32-bit cyclic redundancy check (CRC32) of any memory accessible through the bus matrix
- ARM® CoreSight™ compliant device identification
- Two debug communications channels
- Debug access port security filter
- Onboard memory built-in self-test (MBIST)

13.3 Block Diagram

Figure 13-1. DSU Block Diagram

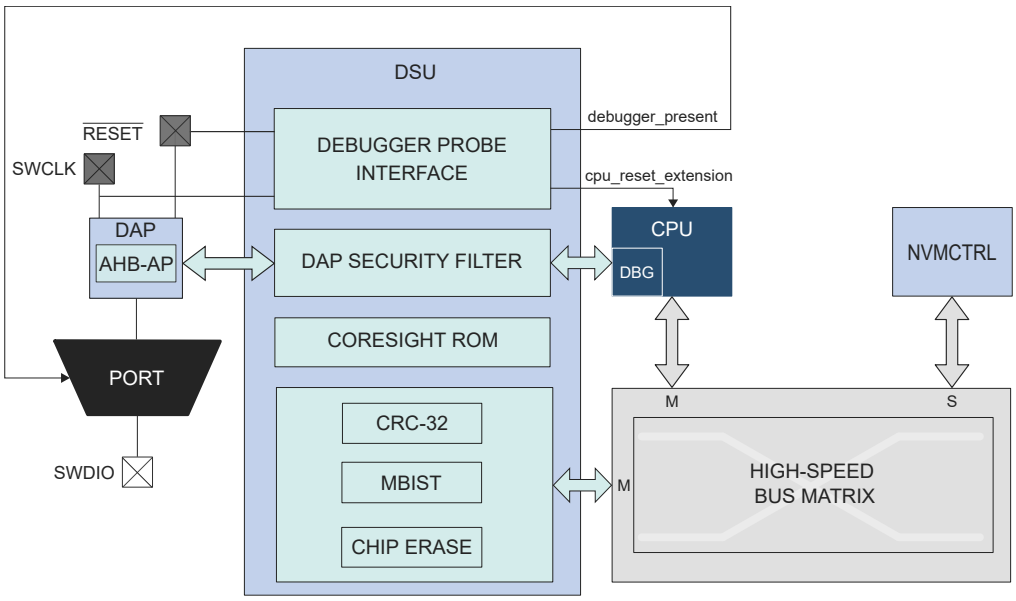

Downloaded from Arrow.com.

13.4 Signal Description

The DSU uses three signals to function.

Signal Name	Type	Description
$\overline{\text{RESET}}$	Digital Input	External reset
SWCLK	Digital Input	SW clock
SWDIO	Digital I/O	SW bidirectional data pin

Related Links

7. I/O Multiplexing and Considerations

13.5 Product Dependencies

In order to use this peripheral, other parts of the system must be configured correctly, as described below.

13.5.1 I/O Lines

The SWCLK pin is by default assigned to the DSU module to allow debugger probe detection and to stretch the CPU reset phase. For more information, refer to 13.6.3 Debugger Probe Detection. The Hot-Plugging feature depends on the PORT configuration. If the SWCLK pin function is changed in the PORT or if the PORT_MUX is disabled, the Hot-Plugging feature is disabled until a power-reset or an external reset is performed.

13.5.2 Power Management

The DSU will continue to operate in Idle mode.

Related Links

16. PM – Power Manager

13.5.3 Clocks

The DSU bus clocks (CLK_DSU_APB and CLK_DSU_AHB) can be enabled and disabled by the Power Manager. Refer to *PM – Power Manager*

Related Links

16. PM – Power Manager

13.5.4 DMA

Not applicable.

13.5.5 Interrupts

Not applicable.

13.5.6 Events

Not applicable.

13.5.7 Register Access Protection

Registers with write-access can be optionally write-protected by the Peripheral Access Controller (PAC), except for the following:

- Debug Communication Channel 0 register (DCC0)
- Debug Communication Channel 1 register (DCC1)

Note: Optional write-protection is indicated by the "PAC Write-Protection" property in the register description.

Write-protection does not apply for accesses through an external debugger.

Downloaded from Arrow.com.

Related Links
11.6 Peripheral Access Controller (PAC)

13.5.8 Analog Connections
Not applicable.

13.6 Debug Operation

13.6.1 Principle of Operation
The DSU provides basic services to allow on-chip debug using the ARM Debug Access Port and the ARM processor debug resources:

- CPU reset extension
- Debugger probe detection

For more details on the ARM debug components, refer to the ARM Debug Interface v5 Architecture Specification.

13.6.2 CPU Reset Extension
"CPU reset extension" refers to the extension of the reset phase of the CPU core after the external reset is released. This ensures that the CPU is not executing code at startup while a debugger is connects to the system. The debugger is detected on a $\overline{\text{RESET}}$ release event when SWCLK is low. At startup, SWCLK is internally pulled up to avoid false detection of a debugger if the SWCLK pin is left unconnected. When the CPU is held in the reset extension phase, the CPU Reset Extension bit of the Status A register (STATUSA.CRSTEXT) is set. To release the CPU, write a '1' to STATUSA.CRSTEXT. STATUSA.CRSTEXT will then be set to '0'. Writing a '0' to STATUSA.CRSTEXT has no effect. For security reasons, it is not possible to release the CPU reset extension when the device is protected by the NVMCTRL security bit. Trying to do so sets the Protection Error bit (PERR) of the Status A register (STATUSA.PERR).

Figure 13-2. Typical CPU Reset Extension Set and Clear Timing Diagram

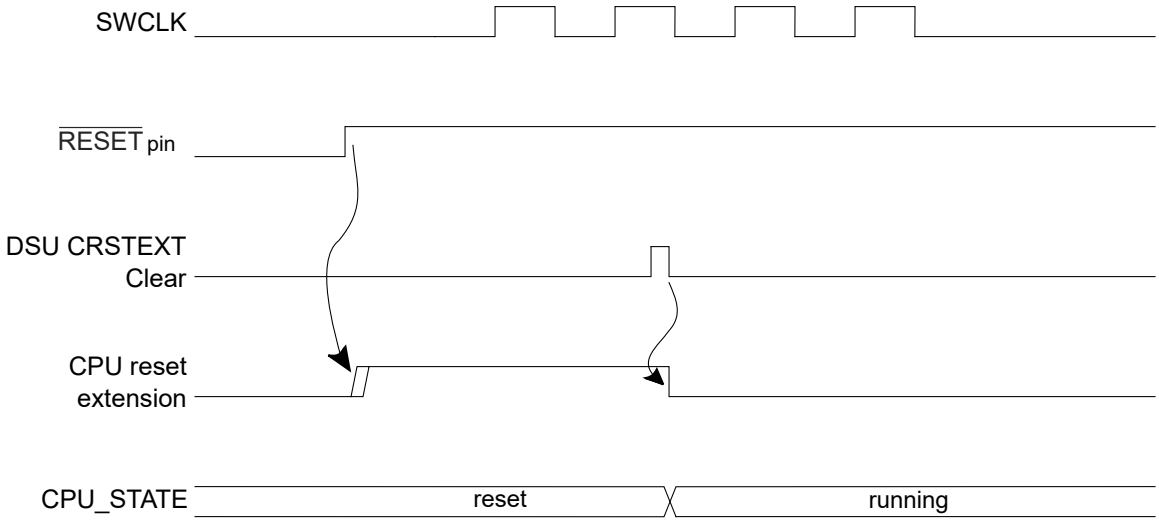

Related Links
22. Nonvolatile Memory Controller (NVMCTRL)
22.6.6 Security Bit

13.6.3 Debugger Probe Detection

13.6.3.1 Cold Plugging
Cold-Plugging is the detection of a debugger when the system is in reset. Cold-Plugging is detected when the CPU reset extension is requested, as described above.

Downloaded from Arrow.com.

13.6.3.2 Hot Plugging

Hot-Plugging is the detection of a debugger probe when the system is not in reset. Hot-Plugging is not possible under reset because the detector is reset when POR or $\overline{\text{RESET}}$ are asserted. Hot-Plugging is active when a SWCLK falling edge is detected. The SWCLK pad is multiplexed with other functions and the user must ensure that its default function is assigned to the debug system. If the SWCLK function is changed, the Hot-Plugging feature is disabled until a power-reset or external reset occurs. Availability of the Hot-Plugging feature can be read from the Hot-Plugging Enable bit of the Status B register (STATUSB.HPE).

Figure 13-3. Hot-Plugging Detection Timing Diagram



The presence of a debugger probe is detected when either Hot-Plugging or Cold-Plugging is detected. Once detected, the Debugger Present bit of the Status B register (STATUSB.DBGPRES) is set. For security reasons, Hot-Plugging is not available when the device is protected by the NVMCTRL security bit.

This detection requires that pads are correctly powered. Thus, at cold startup, this detection cannot be done until POR is released. If the device is protected, Cold-Plugging is the only way to detect a debugger probe, and so the external reset timing must be longer than the POR timing. If external reset is deasserted before POR release, the user must retry the procedure above until it gets connected to the device.

Related Links

22. Nonvolatile Memory Controller (NVMCTRL)
22.6.6 Security Bit

13.7 Chip Erase

Chip-Erase consists of removing all sensitive information stored in the chip and clearing the NVMCTRL security bit. Therefore, all volatile memories, the Flash memory (including the EEPROM Emulation area) and the RWWEE Emulation section will be erased. The Flash auxiliary rows, including the user row, will not be erased.

When the device is protected, the debugger must first reset the device in order to be detected. This ensures that internal registers are reset after the protected state is removed. The Chip-Erase operation is triggered by writing a '1' to the Chip-Erase bit in the Control register (CTRL.CE). This command will be discarded if the DSU is protected by the Peripheral Access Controller (PAC). Once issued, the module clears volatile memories prior to erasing the Flash array. To ensure that the Chip-Erase operation is completed, check the Done bit of the Status A register (STATUSA.DONE).

The Chip-Erase operation depends on clocks and power management features that can be altered by the CPU. For that reason, it is recommended to issue a Chip-Erase after a Cold-Plugging procedure to ensure that the device is in a known and safe state.

The recommended sequence is as follows:

1. Issue the Cold-Plugging procedure (refer to 13.6.3.1 Cold Plugging), and the device performs these actions:
   a. Detects the debugger probe.
   b. Holds the CPU in reset.
2. Issue the Chip-Erase command by writing a '1' to CTRL.CE. The device then:
   a. Clears the system volatile memories.

Downloaded from Arrow.com.

b. Erases the whole Flash array (including the EEPROM Emulation area, not including auxiliary rows) and the RWWEE Emulation section.
c. Erases the lock row, removing the NVMCTRL security bit protection.

3. Check for completion by polling STATUSA.DONE (read as '1' when completed).
4. Reset the device to let the NVMCTRL update the fuses.

13.8 Programming

Programming the Flash or RAM memories is only possible when the device is not protected by the NVMCTRL security bit. The programming procedure is as follows:

1. At power up, $\overline{\text{RESET}}$ is driven low by a debugger. The on-chip regulator holds the system in a POR state until the input supply is above the POR threshold (refer to Powe-On Reset (POR) characteristics). The system continues to be held in this static state until the internally regulated supplies have reached a safe operating state.
2. The PM starts, clocks are switched to the slow clock (Core Clock, System Clock, Flash Clock and any Bus Clocks that do not have clock gate control). Internal resets are maintained due to the external reset.
3. The debugger maintains a low level on SWCLK. $\overline{\text{RESET}}$ is released, resulting in a debugger Cold-Plugging procedure.
4. The debugger generates a clock signal on the SWCLK pin, the Debug Access Port (DAP) receives a clock.
5. The CPU remains in Reset due to the Cold-Plugging procedure; meanwhile, the rest of the system is released.
6. A Chip-Erase is issued to ensure that the Flash is fully erased prior to programming.
7. Programming is available through the AHB-AP.
8. After the operation is completed, the chip can be restarted either by asserting $\overline{\text{RESET}}$ or toggling power. Make sure that the SWCLK pin is high when releasing $\overline{\text{RESET}}$ to prevent extending the CPU reset.

Related Links

37. Electrical Characteristics at 85°C
22. Nonvolatile Memory Controller (NVMCTRL)
22.6.6 Security Bit

13.9 Intellectual Property Protection

Intellectual property protection consists of restricting access to internal memories from external tools when the device is protected, and this is accomplished by setting the NVMCTRL security bit. This protected state can be removed by issuing a Chip-Erase (refer to 13.7 Chip Erase). When the device is protected, read/write accesses using the AHB-AP are limited to the DSU address range and DSU commands are restricted. When issuing a Chip-Erase, sensitive information is erased from volatile memory and Flash.

The DSU implements a security filter that monitors the AHB transactions inside the DAP. If the device is protected, then AHB-AP read/write accesses outside the DSU external address range are discarded, causing an error response that sets the ARM AHB-AP sticky error bits (refer to the ARM Debug Interface v5 Architecture Specification on www.arm.com).

The DSU is intended to be accessed either:

- Internally from the CPU, without any limitation, even when the device is protected
- Externally from a debug adapter, with some restrictions when the device is protected

For security reasons, DSU features have limitations when used from a debug adapter. To differentiate external accesses from internal ones, the first 0x100 bytes of the DSU register map has been mirrored at offset 0x100:

- The first 0x100 bytes form the internal address range
- The next 0x100 bytes form the external address range

When the device is protected, the DAP can only issue MEM-AP accesses in the DSU range 0x0100-0x2000.

The DSU operating registers are located in the 0x0000-0x00FF area and remapped in 0x0100-0x01FF to differentiate accesses coming from a debugger and the CPU. If the device is protected and an access is issued in the region 0x0100-0x01FF, it is subject to security restrictions. For more information, refer to the Table 13-1.

Downloaded from Arrow.com.

Figure 13-4. APB Memory Mapping

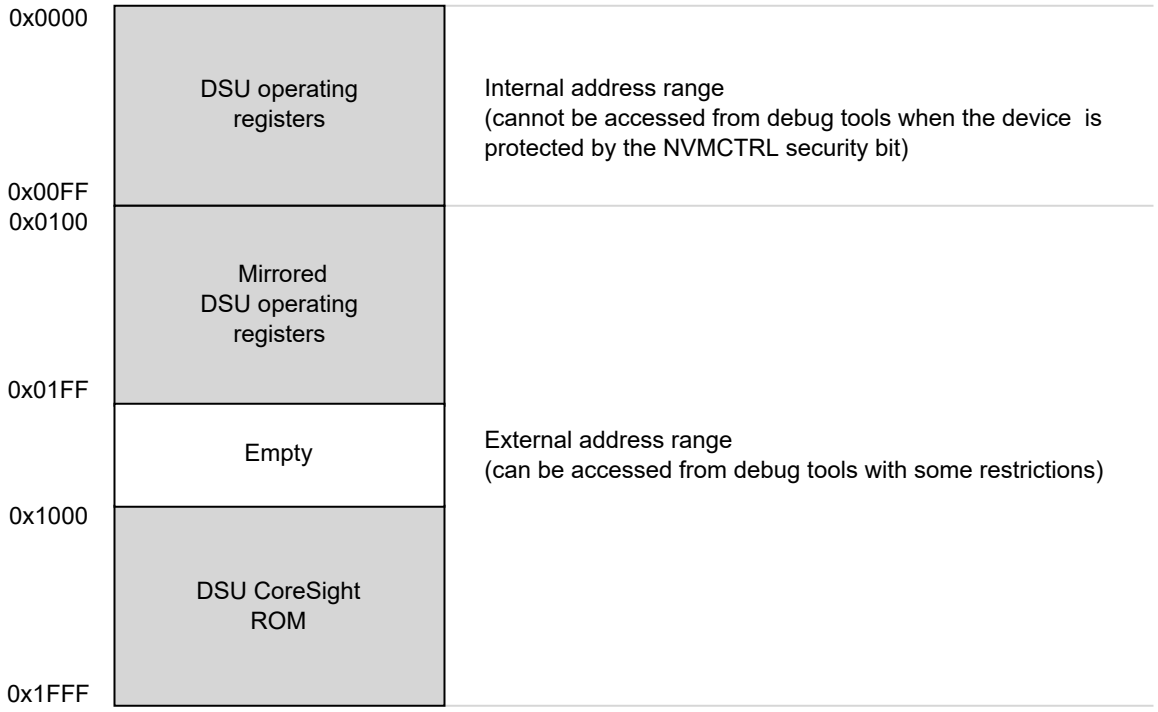

Some features not activated by APB transactions are not available when the device is protected:

Table 13-1. Feature Availability Under Protection

Features	Availability when the device is protected
CPU Reset Extension	Yes
Clear CPU Reset Extension	No
Debugger Cold-Plugging	Yes
Debugger Hot-Plugging	No

Related Links

22. Nonvolatile Memory Controller (NVMCTRL)
22.6.6 Security Bit

13.10 Device Identification

Device identification relies on the ARM CoreSight component identification scheme, which allows the chip to be identified as a SAM device implementing a DSU. The DSU contains identification registers to differentiate the device.

13.10.1 CoreSight Identification

A system-level ARM® CoreSight™ ROM table is present in the device to identify the vendor and the chip identification method. Its address is provided in the MEM-AP BASE register inside the ARM Debug Access Port. The CoreSight ROM implements a 64-bit conceptual ID composed as follows from the PID0 to PID7 CoreSight ROM Table registers:

Downloaded from Arrow.com.

Figure 13-5. Conceptual 64-bit Peripheral ID

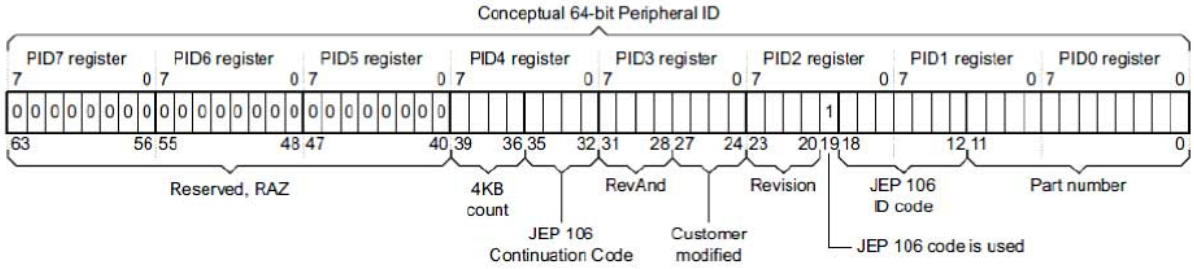

Table 13-2. Conceptual 64-Bit Peripheral ID Bit Descriptions

Field	Size	Description	Location
JEP-106 CC code	4	Continuation code: 0x0	PID4
JEP-106 ID code	7	Device ID: 0x1F	PID1+PID2
4KB count	4	Indicates that the CoreSight component is a ROM: 0x0	PID4
RevAnd	4	Not used; read as 0	PID3
CUSMOD	4	Not used; read as 0	PID3
PARTNUM	12	Contains 0xCD0 to indicate that DSU is present	PID0+PID1
REVISION	4	DSU revision (starts at 0x0 and increments by 1 at both major and minor revisions). Identifies DSU identification method variants. If 0x0, this indicates that device identification can be completed by reading the Device Identification register (DID)	PID2

For more information, refer to the ARM Debug Interface Version 5 Architecture Specification.

13.10.2 Chip Identification Method

The DSU DID register identifies the device by implementing the following information:

- Processor identification
- Product family identification
- Product series identification
- Device select

13.11 Functional Description

13.11.1 Principle of Operation

The DSU provides memory services, such as CRC32 or MBIST that require almost the same interface. Hence, the Address, Length and Data registers (ADDR, LENGTH, DATA) are shared. These shared registers must be configured first; then a command can be issued by writing the Control register. When a command is ongoing, other commands are discarded until the current operation is completed. Hence, the user must wait for the STATUSA.DONE bit to be set prior to issuing another one.

13.11.2 Basic Operation

13.11.2.1 Initialization

The module is enabled by enabling its clocks. For more details, refer to 13.5.3 Clocks. The DSU registers can be PAC write-protected.

Related Links

11.6 Peripheral Access Controller (PAC)

Downloaded from Arrow.com.

13.11.2.2 Operation From a Debug Adapter

Debug adapters should access the DSU registers in the external address range 0x100 – 0x2000. If the device is protected by the NVMCTRL security bit, accessing the first 0x100 bytes causes the system to return an error. Refer to 13.9 Intellectual Property Protection.

Related Links

22. Nonvolatile Memory Controller (NVMCTRL)
22.6.6 Security Bit

13.11.2.3 Operation From the CPU

There are no restrictions when accessing DSU registers from the CPU. However, the user should access DSU registers in the internal address range (0x0 – 0x100) to avoid external security restrictions. Refer to 13.9 Intellectual Property Protection.

13.11.3 32-bit Cyclic Redundancy Check CRC32

The DSU unit provides support for calculating a cyclic redundancy check (CRC32) value for a memory area (including Flash and AHB RAM).

When the CRC32 command is issued from:

- The internal range, the CRC32 can be operated at any memory location
- The external range, the CRC32 operation is restricted; DATA, ADDR, and LENGTH values are forced (see below)

Table 13-3. AMOD Bit Descriptions when Operating CRC32

AMOD[1:0]	Short name	External range restrictions
0	ARRAY	CRC32 is restricted to the full Flash array area (EEPROM Emulation area not included) DATA forced to 0xFFFFFFFF before calculation (no seed)
1	EEPROM	CRC32 of the whole EEPROM Emulation area DATA forced to 0xFFFFFFFF before calculation (no seed)
2-3	Reserved	-

The algorithm employed is the industry standard CRC32 algorithm using the generator polynomial 0xEDB88320 (reversed representation).

13.11.3.1 Starting CRC32 Calculation

CRC32 calculation for a memory range is started after writing the start address into the Address register (ADDR) and the size of the memory range into the Length register (LENGTH). Both must be word-aligned.

The initial value used for the CRC32 calculation must be written to the Data register (DATA). This value will usually be 0xFFFFFFFF, but can be, for example, the result of a previous CRC32 calculation if generating a common CRC32 of separate memory blocks.

Once completed, the calculated CRC32 value can be read out of the Data register. The read value must be complemented to match standard CRC32 implementations or kept non-inverted if used as starting point for subsequent CRC32 calculations.

The actual test is started by writing a '1' in the 32-bit Cyclic Redundancy Check bit of the Control register (CTRL.CRC). A running CRC32 operation can be canceled by resetting the module (writing '1' to CTRL.SWRST).

Related Links

22. Nonvolatile Memory Controller (NVMCTRL)
22.6.6 Security Bit

13.11.3.2 Interpreting the Results

The user should monitor the Status A register. When the operation is completed, STATUSA.DONE is set. Then the Bus Error bit of the Status A register (STATUSA.BERR) must be read to ensure that no bus error occurred.

Downloaded from Arrow.com.

13.11.4 Debug Communication Channels

The Debug Communication Channels (DCC0 and DCC1) consist of a pair of registers with associated handshake logic, accessible by both CPU and debugger even if the device is protected by the NVMCTRL security bit. The registers can be used to exchange data between the CPU and the debugger, during run time as well as in Debug mode. This enables the user to build a custom debug protocol using only these registers.

The DCC0 and DCC1 registers are accessible when the Protected state is active. When the device is protected, however, it is not possible to connect a debugger while the CPU is running (STATUSA.CRSTEXT is not writable and the CPU is held under Reset).

Two Debug Communication Channel status bits in the Status B registers (STATUS.DCCDx) indicate whether a new value has been written in DCC0 or DCC1. These bits, DCC0D and DCC1D, are located in the STATUSB registers. They are automatically set on write and cleared on read.

Note: The DCC0 and DCC1 registers are shared with the on-board memory testing logic (MBIST). Accordingly, DCC0 and DCC1 must not be used while performing MBIST operations.

Related Links

22. Nonvolatile Memory Controller (NVMCTRL)

22.6.6 Security Bit

13.11.5 Testing of On-Board Memories MBIST

The DSU implements a feature for automatic testing of memory, also known as MBIST (memory built-in self test). This is primarily intended for production test of on-board memories. MBIST cannot be operated from the external address range when the device is protected by the NVMCTRL security bit. If an MBIST command is issued when the device is protected, a protection error is reported in the Protection Error bit in the Status A register (STATUSA.PERR).

1. Algorithm
   The algorithm used for testing is a type of March algorithm called "March LR". This algorithm is able to detect a wide range of memory defects, while still keeping a linear run time. The algorithm is:
   a. Write entire memory to '0', in any order.
   b. Bit by bit read '0', write '1', in descending order.
   c. Bit by bit read '1', write '0', read '0', write '1', in ascending order.
   d. Bit by bit read '1', write '0', in ascending order.
   e. Bit by bit read '0', write '1', read '1', write '0', in ascending order.
   f. Read '0' from entire memory, in ascending order.

   The specific implementation used as a run time which depends on the CPU clock frequency and the number of bytes tested in the RAM. The detected faults are:
   – Address decoder faults
   – Stuck-at faults
   – Transition faults
   – Coupling faults
   – Linked Coupling faults
2. Starting MBIST
   To test a memory, you need to write the start address of the memory to the ADDR.ADDR bit field, and the size of the memory into the Length register.

   For best test coverage, an entire physical memory block should be tested at once. It is possible to test only a subset of a memory, but the test coverage will then be somewhat lower.

   The actual test is started by writing a '1' to CTRL.MBIST. A running MBIST operation can be canceled by writing a '1' to CTRL.SWRST.
3. Interpreting the Results
   The tester should monitor the STATUSA register. When the operation is completed, STATUSA.DONE is set. There are two different modes:
   – ADDR.AMOD=0: exit-on-error (default)

Downloaded from Arrow.com.

In this mode, the algorithm terminates either when a fault is detected or on successful completion. In both cases, STATUSA.DONE is set. If an error was detected, STATUSA.FAIL will be set. User then can read the DATA and ADDR registers to locate the fault.

– ADDR.AMOD=1: pause-on-error
In this mode, the MBIST algorithm is paused when an error is detected. In such a situation, only STATUSA.FAIL is asserted. The state machine waits for user to clear STATUSA.FAIL by writing a '1' in STATUSA.FAIL to resume. Prior to resuming, user can read the DATA and ADDR registers to locate the fault.

4. Locating Faults
If the test stops with STATUSA.FAIL set, one or more bits failed the test. The test stops at the first detected error. The position of the failing bit can be found by reading the following registers:

– ADDR: Address of the word containing the failing bit
– DATA: contains data to identify which bit failed, and during which phase of the test it failed. The DATA register will in this case contains the following bit groups:

Figure 13-6. DATA bits Description When MBIST Operation Returns an Error

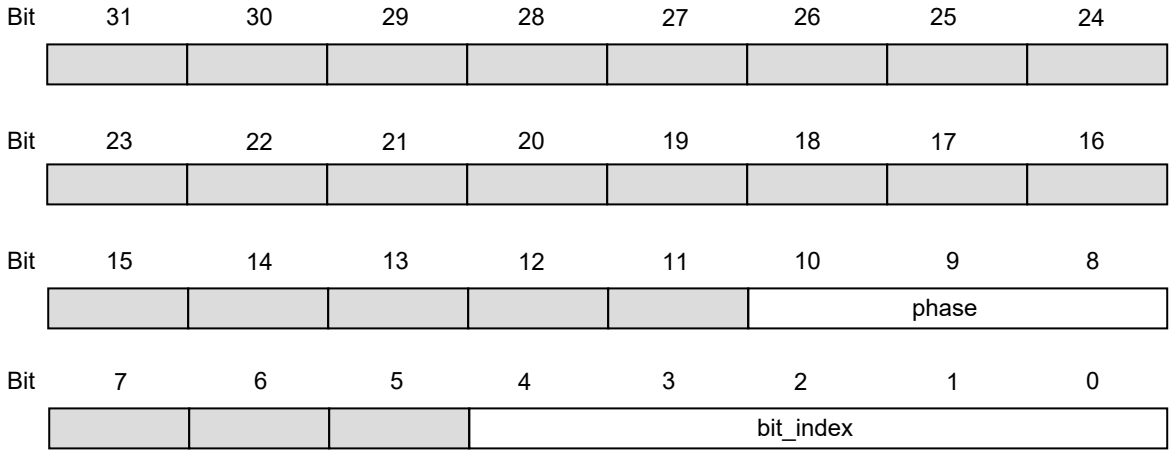

- bit_index: contains the bit number of the failing bit
- phase: indicates which phase of the test failed and the cause of the error, as listed in the following table.

Table 13-4. MBIST Operation Phases

Phase	Test actions
0	Write all bits to zero. This phase cannot fail.
1	Read '0', write '1', increment address
2	Read '1', write '0'
3	Read '0', write '1', decrement address
4	Read '1', write '0', decrement address
5	Read '0', write '1'
6	Read '1', write '0', decrement address
7	Read all zeros. bit_index is not used

Table 13-5. AMOD Bit Descriptions for MBIST

AMOD[1:0]	Description
0x0	Exit on Error
0x1	Pause on Error

Downloaded from Arrow.com.

.....continued	
AMOD[1:0]	**Description**
0x2, 0x3	Reserved

Related Links

22. Nonvolatile Memory Controller (NVMCTRL)
22.6.6 Security Bit
9. Product Mapping

13.11.6 System Services Availability when Accessed Externally and Device is Protected

External access: Access performed in the DSU address offset 0x200-0x1FFF range.

Internal access: Access performed in the DSU address offset 0x000-0x100 range.

Table 13-6. Available Features when Operated From The External Address Range and Device is Protected

Features	Availability From The External Address Range and Device is Protected
Chip-Erase command and status	Yes
CRC32	Yes, only full array or full RWWEE Emulation
CoreSight Compliant Device identification	Yes
Debug communication channels	Yes
Testing of onboard memories (MBIST)	No
STATUSA.CRSTEXT clearing	No (STATUSA.PERR is set when attempting to do so)

Downloaded from Arrow.com.

13.12 Register Summary

Offset	Name	Bit Pos.	7	6	5	4	3	2	1	0
0x00	CTRL	7:0				CE	MBIST	CRC		SWRST
0x01	STATUSA	7:0				PERR	FAIL	BERR	CRSTEXT	DONE
0x02	STATUSB	7:0				HPE	DCCD1	DCCD0	DBGPRES	PROT
0x03	Reserved									
0x04	ADDR	7:0	ADDR[5:0]						AMOD[1:0]	
		15:8	ADDR[13:6]							
		23:16	ADDR[21:14]							
		31:24	ADDR[29:22]							
0x08	LENGTH	7:0	LENGTH[5:0]							
		15:8	LENGTH[13:6]							
		23:16	LENGTH[21:14]							
		31:24	LENGTH[29:22]							
0x0C	DATA	7:0	DATA[7:0]							
		15:8	DATA[15:8]							
		23:16	DATA[23:16]							
		31:24	DATA[31:24]							
0x10	DCC0	7:0	DATA[7:0]							
		15:8	DATA[15:8]							
		23:16	DATA[23:16]							
		31:24	DATA[31:24]							
0x14	DCC1	7:0	DATA[7:0]							
		15:8	DATA[15:8]							
		23:16	DATA[23:16]							
		31:24	DATA[31:24]							
0x18	DID	7:0	DEVSEL[7:0]							
		15:8	DIE[3:0]				REVISION[3:0]			
		23:16	FAMILY[0]		SERIES[5:0]					
		31:24	PROCESSOR[3:0]				FAMILY[4:1]			
0x1C ... 0x0FFF	Reserved									
0x1000	ENTRY0	7:0							FMT	EPRES
		15:8	ADDOFF[3:0]							
		23:16	ADDOFF[11:4]							
		31:24	ADDOFF[19:12]							
0x1004	ENTRY1	7:0							FMT	EPRES
		15:8	ADDOFF[3:0]							
		23:16	ADDOFF[11:4]							
		31:24	ADDOFF[19:12]							
0x1008	END	7:0	END[7:0]							
		15:8	END[15:8]							
		23:16	END[23:16]							
		31:24	END[31:24]							
0x100C ... 0x1FCB	Reserved									
0x1FCC	MEMTYPE	7:0								SMEMP
		15:8								
		23:16								
		31:24								
0x1FD0	PID4	7:0	FKBC[3:0]				JEPCC[3:0]			
		15:8								
		23:16								
		31:24								

Downloaded from Arrow.com.

.....continued

Offset	Name	Bit Pos.	7	6	5	4	3	2	1	0
0x1FD4 ... 0x1FDF	Reserved									
0x1FE0	PID0	7:0	PARTNBL[7:0]							
		15:8								
		23:16								
		31:24								
0x1FE4	PID1	7:0	JEPIDCL[3:0]				PARTNBH[3:0]			
		15:8								
		23:16								
		31:24								
0x1FE8	PID2	7:0	REVISION[3:0]				JEPU	JEPIDCH[2:0]		
		15:8								
		23:16								
		31:24								
0x1FEC	PID3	7:0	REVAND[3:0]				CUSMOD[3:0]			
		15:8								
		23:16								
		31:24								
0x1FF0	CID0	7:0	PREAMBLEB0[7:0]							
		15:8								
		23:16								
		31:24								
0x1FF4	CID1	7:0	CCLASS[3:0]				PREAMBLE[3:0]			
		15:8								
		23:16								
		31:24								
0x1FF8	CID2	7:0	PREAMBLEB2[7:0]							
		15:8								
		23:16								
		31:24								
0x1FFC	CID3	7:0	PREAMBLEB3[7:0]							
		15:8								
		23:16								
		31:24								

13.13 Register Description

Registers can be 8, 16, or 32 bits wide. Atomic 8-, 16- and 32-bit accesses are supported. In addition, the 8-bit quarters and 16-bit halves of a 32-bit register, and the 8-bit halves of a 16-bit register can be accessed directly.

Some registers are optionally write-protected by the Peripheral Access Controller (PAC). Optional PAC write-protection is denoted by the "PAC Write-Protection" property in each individual register description. For details, refer to 13.5.7 Register Access Protection.

Downloaded from Arrow.com.

13.13.1 Control

Name: CTRL
Offset: 0x0000
Reset: 0x00
Property: PAC Write-Protection

Bit	7	6	5	4	3	2	1	0
				CE	MBIST	CRC		SWRST
Access				W	W	W		W
Reset				0	0	0		0

Bit 4 – CE Chip-Erase
Writing a '0' to this bit has no effect.
Writing a '1' to this bit starts the Chip-Erase operation.

Bit 3 – MBIST Memory Built-In Self-Test
Writing a '0' to this bit has no effect.
Writing a '1' to this bit starts the memory BIST algorithm.

Bit 2 – CRC 32-bit Cyclic Redundancy Check
Writing a '0' to this bit has no effect.
Writing a '1' to this bit starts the cyclic redundancy check algorithm.

Bit 0 – SWRST Software Reset
Writing a '0' to this bit has no effect.
Writing a '1' to this bit resets the module.

Downloaded from Arrow.com.

13.13.2 Status A

Name: STATUSA
Offset: 0x0001
Reset: 0x00
Property: PAC Write-Protection

Bit	7	6	5	4	3	2	1	0
				PERR	FAIL	BERR	CRSTEXT	DONE
Access				R/W	R/W	R/W	R/W	R/W
Reset				0	0	0	0	0

Bit 4 – PERR Protection Error
Writing a '0' to this bit has no effect.
Writing a '1' to this bit clears the Protection Error bit.
This bit is set when a command that is not allowed in protected state is issued.

Bit 3 – FAIL Failure
Writing a '0' to this bit has no effect.
Writing a '1' to this bit clears the Failure bit.
This bit is set when a DSU operation failure is detected.

Bit 2 – BERR Bus Error
Writing a '0' to this bit has no effect.
Writing a '1' to this bit clears the Bus Error bit.
This bit is set when a bus error is detected.

Bit 1 – CRSTEXT CPU Reset Phase Extension
Writing a '0' to this bit has no effect.
Writing a '1' to this bit clears the CPU Reset Phase Extension bit.
This bit is set when a debug adapter Cold-Plugging is detected, which extends the CPU reset phase.

Bit 0 – DONE Done
Writing a '0' to this bit has no effect.
Writing a '1' to this bit clears the Done bit.
This bit is set when a DSU operation is completed.

Downloaded from Arrow.com.

13.13.3 Status B

Name: STATUSB
Offset: 0x0002
Reset: 0x1X
Property: PAC Write-Protection

Bit	7	6	5	4	3	2	1	0
				HPE	DCCD1	DCCD0	DBGPRES	PROT
Access				R	R	R	R	R
Reset				1	0	0	0	0

Bit 4 – HPE Hot-Plugging Enable
Writing a '0' to this bit has no effect.
Writing a '1' to this bit has no effect.
This bit is set when Hot-Plugging is enabled.
This bit is cleared when Hot-Plugging is disabled. This is the case when the SWCLK function is changed. Only a power-reset or a external reset can set it again.

Bits 2, 3 – DCCDx Debug Communication Channel x Dirty [x=1..0]
Writing a '0' to this bit has no effect.
Writing a '1' to this bit has no effect.
This bit is set when DCCx is written.
This bit is cleared when DCCx is read.

Bit 1 – DBGPRES Debugger Present
Writing a '0' to this bit has no effect.
Writing a '1' to this bit has no effect.
This bit is set when a debugger probe is detected.
This bit is never cleared.

Bit 0 – PROT Protected
Writing a '0' to this bit has no effect.
Writing a '1' to this bit has no effect.
This bit is set at power-up when the device is protected.
This bit is never cleared.

Downloaded from Arrow.com.

13.13.4 Address

Name: ADDR
Offset: 0x0004
Reset: 0x00000000
Property: PAC Write-Protection

Bit	31	30	29	28	27	26	25	24
	ADDR[29:22]							
Access	R/W	R/W	R/W	R/W	R/W	R/W	R/W	R/W
Reset	0	0	0	0	0	0	0	0

Bit	23	22	21	20	19	18	17	16
	ADDR[21:14]							
Access	R/W	R/W	R/W	R/W	R/W	R/W	R/W	R/W
Reset	0	0	0	0	0	0	0	0

Bit	15	14	13	12	11	10	9	8
	ADDR[13:6]							
Access	R/W	R/W	R/W	R/W	R/W	R/W	R/W	R/W
Reset	0	0	0	0	0	0	0	0

Bit	7	6	5	4	3	2	1	0
	ADDR[5:0]						AMOD[1:0]	
Access	R/W	R/W	R/W	R/W	R/W	R/W	R/W	R/W
Reset	0	0	0	0	0	0	0	0

Bits 31:2 – ADDR[29:0] Address
Initial word start address needed for memory operations.

Bits 1:0 – AMOD[1:0] Access Mode
The functionality of these bits is dependent on the operation mode.
Bit description when operating CRC32: refer to 13.11.3 32-bit Cyclic Redundancy Check CRC32
Bit description when testing onboard memories (MBIST): refer to 13.11.5 Testing of On-Board Memories MBIST

Downloaded from Arrow.com.

13.13.5 Length

Name: LENGTH
Offset: 0x0008
Reset: 0x00000000
Property: PAC Write-Protection

Bit	31	30	29	28	27	26	25	24
	LENGTH[29:22]							
Access	R/W	R/W	R/W	R/W	R/W	R/W	R/W	R/W
Reset	0	0	0	0	0	0	0	0

Bit	23	22	21	20	19	18	17	16
	LENGTH[21:14]							
Access	R/W	R/W	R/W	R/W	R/W	R/W	R/W	R/W
Reset	0	0	0	0	0	0	0	0

Bit	15	14	13	12	11	10	9	8
	LENGTH[13:6]							
Access	R/W	R/W	R/W	R/W	R/W	R/W	R/W	R/W
Reset	0	0	0	0	0	0	0	0

Bit	7	6	5	4	3	2	1	0
	LENGTH[5:0]							
Access	R/W	R/W	R/W	R/W	R/W	R/W		
Reset	0	0	0	0	0	0		

Bits 31:2 – LENGTH[29:0] Length
Length in words needed for memory operations.

Downloaded from Arrow.com.

13.13.6 Data

Name: DATA
Offset: 0x000C
Reset: 0x00000000
Property: PAC Write-Protection

Bit	31	30	29	28	27	26	25	24
	DATA[31:24]							
Access	R/W	R/W	R/W	R/W	R/W	R/W	R/W	R/W
Reset	0	0	0	0	0	0	0	0

Bit	23	22	21	20	19	18	17	16
	DATA[23:16]							
Access	R/W	R/W	R/W	R/W	R/W	R/W	R/W	R/W
Reset	0	0	0	0	0	0	0	0

Bit	15	14	13	12	11	10	9	8
	DATA[15:8]							
Access	R/W	R/W	R/W	R/W	R/W	R/W	R/W	R/W
Reset	0	0	0	0	0	0	0	0

Bit	7	6	5	4	3	2	1	0
	DATA[7:0]							
Access	R/W	R/W	R/W	R/W	R/W	R/W	R/W	R/W
Reset	0	0	0	0	0	0	0	0

Bits 31:0 – DATA[31:0] Data
Memory operation initial value or result value.

Downloaded from Arrow.com.

13.13.7 Debug Communication Channel 0

Name: DCC0
Offset: 0x0010
Reset: 0x00000000
Property: -

Bit	31	30	29	28	27	26	25	24
	DATA[31:24]							
Access	R/W	R/W	R/W	R/W	R/W	R/W	R/W	R/W
Reset	0	0	0	0	0	0	0	0

Bit	23	22	21	20	19	18	17	16
	DATA[23:16]							
Access	R/W	R/W	R/W	R/W	R/W	R/W	R/W	R/W
Reset	0	0	0	0	0	0	0	0

Bit	15	14	13	12	11	10	9	8
	DATA[15:8]							
Access	R/W	R/W	R/W	R/W	R/W	R/W	R/W	R/W
Reset	0	0	0	0	0	0	0	0

Bit	7	6	5	4	3	2	1	0
	DATA[7:0]							
Access	R/W	R/W	R/W	R/W	R/W	R/W	R/W	R/W
Reset	0	0	0	0	0	0	0	0

Bits 31:0 – DATA[31:0] Data
Data register.

Downloaded from Arrow.com.

13.13.8 Debug Communication Channel 1

Name: DCC1
Offset: 0x0014
Reset: 0x00000000
Property: -

Bit	31	30	29	28	27	26	25	24
	DATA[31:24]							
Access	R/W	R/W	R/W	R/W	R/W	R/W	R/W	R/W
Reset	0	0	0	0	0	0	0	0

Bit	23	22	21	20	19	18	17	16
	DATA[23:16]							
Access	R/W	R/W	R/W	R/W	R/W	R/W	R/W	R/W
Reset	0	0	0	0	0	0	0	0

Bit	15	14	13	12	11	10	9	8
	DATA[15:8]							
Access	R/W	R/W	R/W	R/W	R/W	R/W	R/W	R/W
Reset	0	0	0	0	0	0	0	0

Bit	7	6	5	4	3	2	1	0
	DATA[7:0]							
Access	R/W	R/W	R/W	R/W	R/W	R/W	R/W	R/W
Reset	0	0	0	0	0	0	0	0

Bits 31:0 – DATA[31:0] Data
Data register.

Downloaded from Arrow.com.

13.13.9 Device Identification

Name: DID
Offset: 0x0018
Property: PAC Write Protection

The information in this register is related to the Ordering Information.

Bit	31	30	29	28	27	26	25	24
	PROCESSOR[3:0]				FAMILY[4:1]			
Access	R	R	R	R	R	R	R	R
Reset	p	p	p	p	f	f	f	f

Bit	23	22	21	20	19	18	17	16
	FAMILY[0]		SERIES[5:0]					
Access	R		R	R	R	R	R	R
Reset	f		s	s	s	s	s	s

Bit	15	14	13	12	11	10	9	8
	DIE[3:0]				REVISION[3:0]			
Access	R	R	R	R	R	R	R	R
Reset	d	d	d	d	r	r	r	r

Bit	7	6	5	4	3	2	1	0
	DEVSEL[7:0]							
Access	R	R	R	R	R	R	R	R
Reset	x	x	x	x	x	x	x	x

Bits 31:28 – PROCESSOR[3:0] Processor
The value of this field defines the processor used on the device. For this device, the value of this field is 0x1, corresponding to the ARM Cortex-M0+ processor.

Bits 27:23 – FAMILY[4:0] Product Family
The value of this field corresponds to the product family part of the ordering code. For this device, the value of this field is 0x0, corresponding to the SAM D family of base line microcontrollers.

Bits 21:16 – SERIES[5:0] Product Series
The value of this field corresponds to the product series part of the ordering code. For this device, the value of this field is 0x01, corresponding to a product with the Cortex-M0+ processor with DMA and USB features.

Bits 15:12 – DIE[3:0] Die Number
Identifies the die family.

Bits 11:8 – REVISION[3:0] Revision Number
Identifies the die revision number. Refer the product family silicon errata and data sheet clarification document for further information.
Note: The device variant (last letter of the ordering number) is independent of the die revision (DSU.DID.REVISION): The device variant denotes functional differences, whereas the die revision marks evolution of the die.

Bits 7:0 – DEVSEL[7:0] Device Selection
This bit field identifies a device within a product family and product series. The value corresponds to the Flash memory density, pin count and device variant parts of the ordering code. The Family Silicon Device Identification table in the “SAM D21/DA1 Family Silicon Errata” document provides the link between DEVSEL and part number.

Downloaded from Arrow.com.

13.13.10 CoreSight ROM Table Entry 0

Name: ENTRY0
Offset: 0x1000
Reset: 0xXXXXX00X
Property: PAC Write-Protection

Bit	31	30	29	28	27	26	25	24
	ADDOFF[19:12]							
Access	R	R	R	R	R	R	R	R
Reset	x	x	x	x	x	x	x	x

Bit	23	22	21	20	19	18	17	16
	ADDOFF[11:4]							
Access	R	R	R	R	R	R	R	R
Reset	x	x	x	x	x	x	x	x

Bit	15	14	13	12	11	10	9	8
	ADDOFF[3:0]							
Access	R	R	R	R				
Reset	x	x	x	x				

Bit	7	6	5	4	3	2	1	0
							FMT	EPRES
Access							R	R
Reset							1	x

Bits 31:12 – ADDOFF[19:0] Address Offset
The base address of the component, relative to the base address of this ROM table.

Bit 1 – FMT Format
Always reads as '1', indicating a 32-bit ROM table.

Bit 0 – EPRES Entry Present
This bit indicates whether an entry is present at this location in the ROM table.
This bit is set at power-up if the device is not protected indicating that the entry is not present.
This bit is cleared at power-up if the device is not protected indicating that the entry is present.

Downloaded from Arrow.com.

13.13.11 CoreSight ROM Table Entry 1

Name: ENTRY1
Offset: 0x1004
Reset: 0xXXXXX00X
Property: PAC Write-Protection

Bit	31	30	29	28	27	26	25	24
	ADDOFF[19:12]							
Access	R	R	R	R	R	R	R	R
Reset	x	x	x	x	x	x	x	x

Bit	23	22	21	20	19	18	17	16
	ADDOFF[11:4]							
Access	R	R	R	R	R	R	R	R
Reset	x	x	x	x	x	x	x	x

Bit	15	14	13	12	11	10	9	8
	ADDOFF[3:0]							
Access	R	R	R	R				
Reset	x	x	x	x				

Bit	7	6	5	4	3	2	1	0
							FMT	EPRES
Access							R	R
Reset							1	x

Bits 31:12 – ADDOFF[19:0] Address Offset
The base address of the component, relative to the base address of this ROM table.

Bit 1 – FMT Format
Always read as '1', indicating a 32-bit ROM table.

Bit 0 – EPRES Entry Present
This bit indicates whether an entry is present at this location in the ROM table.
This bit is set at power-up if the device is not protected indicating that the entry is not present.
This bit is cleared at power-up if the device is not protected indicating that the entry is present.

Downloaded from Arrow.com.

13.13.12 CoreSight ROM Table End

Name: END
Offset: 0x1008
Reset: 0x00000000
Property: -

Bit	31	30	29	28	27	26	25	24
	END[31:24]							
Access	R	R	R	R	R	R	R	R
Reset	0	0	0	0	0	0	0	0

Bit	23	22	21	20	19	18	17	16
	END[23:16]							
Access	R	R	R	R	R	R	R	R
Reset	0	0	0	0	0	0	0	0

Bit	15	14	13	12	11	10	9	8
	END[15:8]							
Access	R	R	R	R	R	R	R	R
Reset	0	0	0	0	0	0	0	0

Bit	7	6	5	4	3	2	1	0
	END[7:0]							
Access	R	R	R	R	R	R	R	R
Reset	0	0	0	0	0	0	0	0

Bits 31:0 – END[31:0] End Marker
Indicates the end of the CoreSight ROM table entries.

Downloaded from Arrow.com.

13.13.13 CoreSight ROM Table Memory Type

Name: MEMTYPE
Offset: 0x1FCC
Reset: 0x0000000x
Property: -

Bit	31	30	29	28	27	26	25	24
Access								
Reset								

Bit	23	22	21	20	19	18	17	16
Access								
Reset								

Bit	15	14	13	12	11	10	9	8
Access								
Reset								

Bit	7	6	5	4	3	2	1	0
								SMEMP
Access								R
Reset								x

Bit 0 – SMEMP System Memory Present
This bit indicates whether system memory is present on the bus that connects to the ROM table.
This bit is set at power-up if the device is not protected, indicating that the system memory is accessible from a debug adapter.
This bit is cleared at power-up if the device is protected, indicating that the system memory is not accessible from a debug adapter.

Downloaded from Arrow.com.

13.13.14 Peripheral Identification 4

Name: PID4
Offset: 0x1FD0
Reset: 0x00000000
Property: -

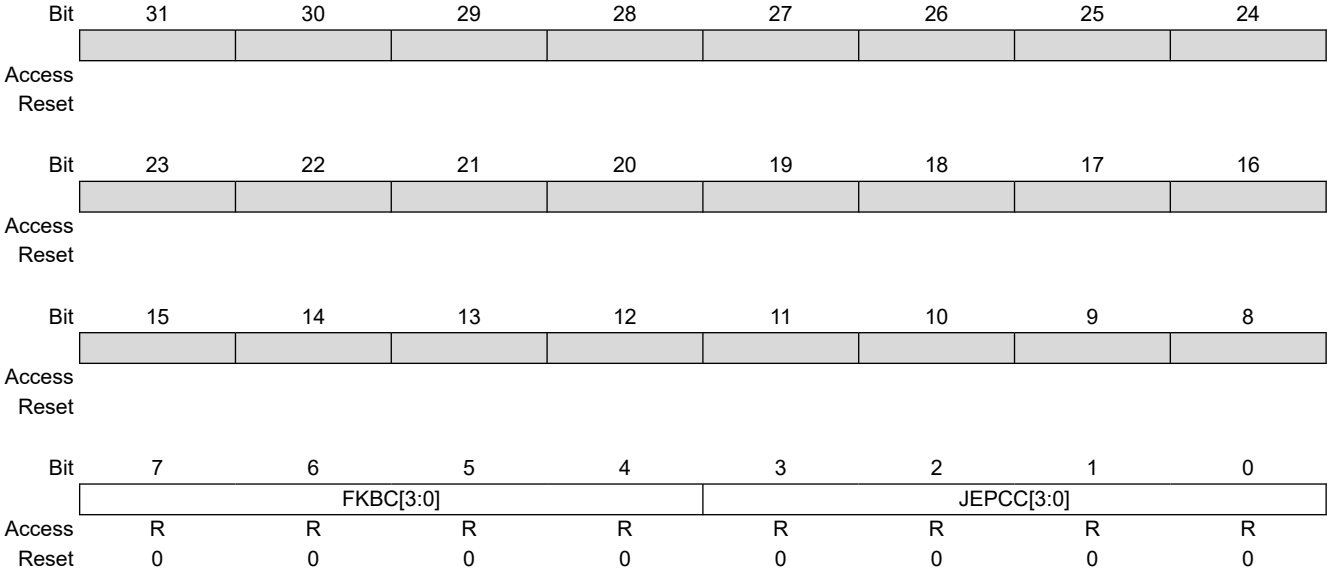

Bits 7:4 – FKBC[3:0] 4KB Count
These bits will always return zero when read, indicating that this debug component occupies one 4KB block.

Bits 3:0 – JEPCC[3:0] JEP-106 Continuation Code
These bits will always return zero when read.

Downloaded from Arrow.com.

13.13.15 Peripheral Identification 0

Name: PID0
Offset: 0x1FE0
Reset: 0x00000000
Property: -

Bit	31	30	29	28	27	26	25	24
Access								
Reset								

Bit	23	22	21	20	19	18	17	16
Access								
Reset								

Bit	15	14	13	12	11	10	9	8
Access								
Reset								

Bit	7	6	5	4	3	2	1	0
	PARTNBL[7:0]							
Access	R	R	R	R	R	R	R	R
Reset	0	0	0	0	0	0	0	0

Bits 7:0 – PARTNBL[7:0] Part Number Low
These bits will always return 0xD0 when read, indicating that this device implements a DSU module instance.

Downloaded from Arrow.com.

13.13.16 Peripheral Identification 1

Name: PID1
Offset: 0x1FE4
Reset: 0x000000FC
Property: -

Bit	31	30	29	28	27	26	25	24
Access								
Reset								

Bit	23	22	21	20	19	18	17	16
Access								
Reset								

Bit	15	14	13	12	11	10	9	8
Access								
Reset								

Bit	7	6	5	4	3	2	1	0
	JEPIDCL[3:0]				PARTNBH[3:0]			
Access	R	R	R	R	R	R	R	R
Reset	1	1	1	1	1	1	0	0

Bits 7:4 – JEPIDCL[3:0] Low part of the JEP-106 Identity Code
These bits will always return 0xF when read (JEP-106 identity code is 0x1F).

Bits 3:0 – PARTNBH[3:0] Part Number High
These bits will always return 0xC when read, indicating that this device implements a DSU module instance.

Downloaded from Arrow.com.

13.13.17 Peripheral Identification 2

Name: PID2
Offset: 0x1FE8
Reset: 0x00000009
Property: -

Bit	31	30	29	28	27	26	25	24
Access								
Reset								

Bit	23	22	21	20	19	18	17	16
Access								
Reset								

Bit	15	14	13	12	11	10	9	8
Access								
Reset								

Bit	7	6	5	4	3	2	1	0
	REVISION[3:0]				JEPU	JEPIDCH[2:0]		
Access	R	R	R	R	R	R	R	R
Reset	0	0	0	0	1	0	0	1

Bits 7:4 – REVISION[3:0] Revision Number
Revision of the peripheral. Starts at 0x0 and increments by one at both major and minor revisions.

Bit 3 – JEPU JEP-106 Identity Code is used
This bit will always return one when read, indicating that JEP-106 code is used.

Bits 2:0 – JEPIDCH[2:0] JEP-106 Identity Code High
These bits will always return 0x1 when read, (JEP-106 identity code is 0x1F).

Downloaded from Arrow.com.

13.13.18 Peripheral Identification 3

Name: PID3
Offset: 0x1FEC
Reset: 0x00000000
Property: -

Bit	31	30	29	28	27	26	25	24
Access								
Reset								

Bit	23	22	21	20	19	18	17	16
Access								
Reset								

Bit	15	14	13	12	11	10	9	8
Access								
Reset								

Bit	7	6	5	4	3	2	1	0
	REVAND[3:0]				CUSMOD[3:0]			
Access	R	R	R	R	R	R	R	R
Reset	0	0	0	0	0	0	0	0

Bits 7:4 – REVAND[3:0] Revision Number
These bits will always return 0x0 when read.

Bits 3:0 – CUSMOD[3:0] ARM CUSMOD
These bits will always return 0x0 when read.

Downloaded from Arrow.com.

13.13.19 Component Identification 0

Name: CID0
Offset: 0x1FF0
Reset: 0x0000000D
Property: -

Bit	31	30	29	28	27	26	25	24
Access								
Reset								

Bit	23	22	21	20	19	18	17	16
Access								
Reset								

Bit	15	14	13	12	11	10	9	8
Access								
Reset								

Bit	7	6	5	4	3	2	1	0
	PREAMBLEB0[7:0]							
Access	R	R	R	R	R	R	R	R
Reset	0	0	0	0	1	1	0	1

Bits 7:0 – PREAMBLEB0[7:0] Preamble Byte 0
These bits will always return 0x0000000D when read.

Downloaded from Arrow.com.

13.13.20 Component Identification 1

Name: CID1
Offset: 0x1FF4
Reset: 0x00000010
Property: -

Bit	31	30	29	28	27	26	25	24
Access								
Reset								

Bit	23	22	21	20	19	18	17	16
Access								
Reset								

Bit	15	14	13	12	11	10	9	8
Access								
Reset								

Bit	7	6	5	4	3	2	1	0
	CCLASS[3:0]				PREAMBLE[3:0]			
Access	R	R	R	R	R	R	R	R
Reset	0	0	0	1	0	0	0	0

Bits 7:4 – CCLASS[3:0] Component Class
These bits will always return 0x1 when read indicating that this ARM CoreSight component is ROM table (refer to the ARM Debug Interface v5 Architecture Specification at http://www.arm.com).

Bits 3:0 – PREAMBLE[3:0] Preamble
These bits will always return 0x00 when read.

Downloaded from Arrow.com.

13.13.21 Component Identification 2

Name: CID2
Offset: 0x1FF8
Reset: 0x00000005
Property: -

Bit	31	30	29	28	27	26	25	24
Access								
Reset								

Bit	23	22	21	20	19	18	17	16
Access								
Reset								

Bit	15	14	13	12	11	10	9	8
Access								
Reset								

Bit	7	6	5	4	3	2	1	0
	PREAMBLEB2[7:0]							
Access	R	R	R	R	R	R	R	R
Reset	0	0	0	0	0	1	0	1

Bits 7:0 – PREAMBLEB2[7:0] Preamble Byte 2
These bits will always return 0x00000005 when read.

Downloaded from Arrow.com.

13.13.22 Component Identification 3

Name: CID3
Offset: 0x1FFC
Reset: 0x000000B1
Property: -

Bit	31	30	29	28	27	26	25	24
Access								
Reset								

Bit	23	22	21	20	19	18	17	16
Access								
Reset								

Bit	15	14	13	12	11	10	9	8
Access								
Reset								

Bit	7	6	5	4	3	2	1	0
	PREAMBLEB3[7:0]							
Access	R	R	R	R	R	R	R	R
Reset	1	0	1	1	0	0	0	1

Bits 7:0 – PREAMBLEB3[7:0] Preamble Byte 3
These bits will always return 0x000000B1 when read.

Downloaded from Arrow.com.

14. Clock System

This chapter summarizes the clock distribution and terminology in the SAM D21 device. It will not explain every detail of its configuration. For in-depth documentation, see the respective peripherals descriptions and the *Generic Clock* documentation.

Related Links

15. GCLK - Generic Clock Controller

14.1 Clock Distribution

Figure 14-1. Clock distribution

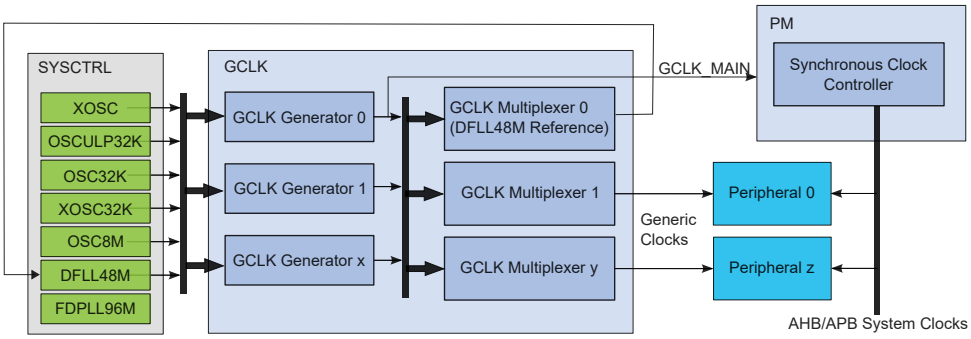

The clock system on the SAM D21 consists of:

- *Clock sources*, controlled by SYSCTRL
  - A clock source provides a time base that is used by other components, such as Generic Clock Generators. Example clock sources are the internal 8MHz oscillator (OSC8M), External crystal oscillator (XOSC) and the Digital frequency locked loop (DFLL48M).
- *Generic Clock Controller (GCLK)* which controls the clock distribution system, made up of:
  - *Generic Clock Generators:* These are programmable prescalers that can use any of the system clock sources as a time base. The Generic Clock Generator 0 generates the clock signal GCLK_MAIN, which is used by the Power Manager, which in turn generates synchronous clocks.
  - *Generic Clocks:* These are clock signals generated by Generic Clock Generators and output by the Generic Clock Multiplexer, and serve as clocks for the peripherals of the system. Multiple instances of a peripheral will typically have a separate Generic Clock for each instance. Generic Clock 0 serves as the clock source for the DFLL48M clock input (when multiplying another clock source).
- Power Manager (PM)
  - The PM generates and controls the synchronous clocks on the system. This includes the CPU, bus clocks (APB, AHB) as well as the synchronous (to the CPU) user interfaces of the peripherals. It contains clock masks that can turn on/off the user interface of a peripheral as well as prescalers for the CPU and bus clocks.

The next figure shows an example where SERCOM0 is clocked by the DFLL48M in open loop mode. The DFLL48M is enabled, the Generic Clock Generator 1 uses the DFLL48M as its clock source and feeds into Peripheral Channel 20. The Generic Clock 20, also called GCLK_SERCOM0_CORE, is connected to SERCOM0. The SERCOM0 interface, clocked by CLK_SERCOM0_APB, has been unmasked in the APBC Mask register in the PM.

Downloaded from Arrow.com.

Figure 14-2. Example of SERCOM clock

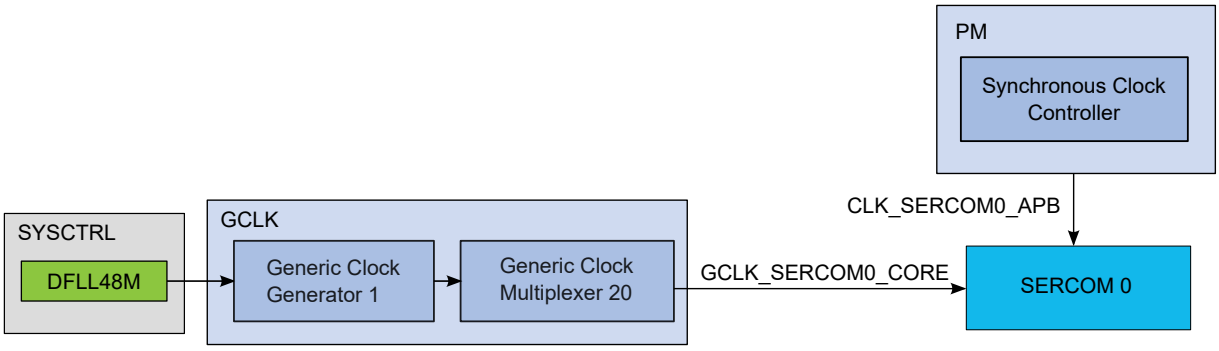

14.2 Synchronous and Asynchronous Clocks

As the CPU and the peripherals can be in different clock domains, i.e. they are clocked from different clock sources and/or with different clock speeds, some peripheral accesses by the CPU need to be synchronized. In this case the peripheral includes a SYNCBUSY status register that can be used to check if a sync operation is in progress.

For a general description, see 14.3 Register Synchronization. Some peripherals have specific properties described in their individual sub-chapter “Synchronization”.

In the datasheet, references to Synchronous Clocks are referring to the CPU and bus clocks, while asynchronous clocks are generated by the Generic Clock Controller (GCLK).

14.3 Register Synchronization

There are two different register synchronization schemes implemented on this device: *common synchronizer register synchronization* and *distributed synchronizer register synchronization*.

The modules using a common synchronizer register synchronization are: GCLK, WDT, RTC, EIC, TC, ADC, AC and DAC.

The modules adopting a distributed synchronizer register synchronization are: SERCOM USART, SERCOM SPI, SERCOM I2C, I2S, TCC, USB.

14.3.1 Common Synchronizer Register Synchronization

14.3.1.1 Overview

All peripherals are composed of one digital bus interface connected to the APB or AHB bus and running from a corresponding clock in the Main Clock domain, and one peripheral core running from the peripheral Generic Clock (GCLK).

Communication between these clock domains must be synchronized. This mechanism is implemented in hardware, so the synchronization process takes place even if the peripheral generic clock is running from the same clock source and on the same frequency as the bus interface.

All registers in the bus interface are accessible without synchronization. All registers in the peripheral core are synchronized when written. Some registers in the peripheral core are synchronized when read. Each individual register description will have the properties "Read-Synchronized" and/or "Write-Synchronized" if a register is synchronized.

As shown in the figure below, the common synchronizer is used for all registers in one peripheral. Therefore, status register (STATUS) of each peripheral can be synchronized at a time.

Downloaded from Arrow.com.

Figure 14-3. Synchronization

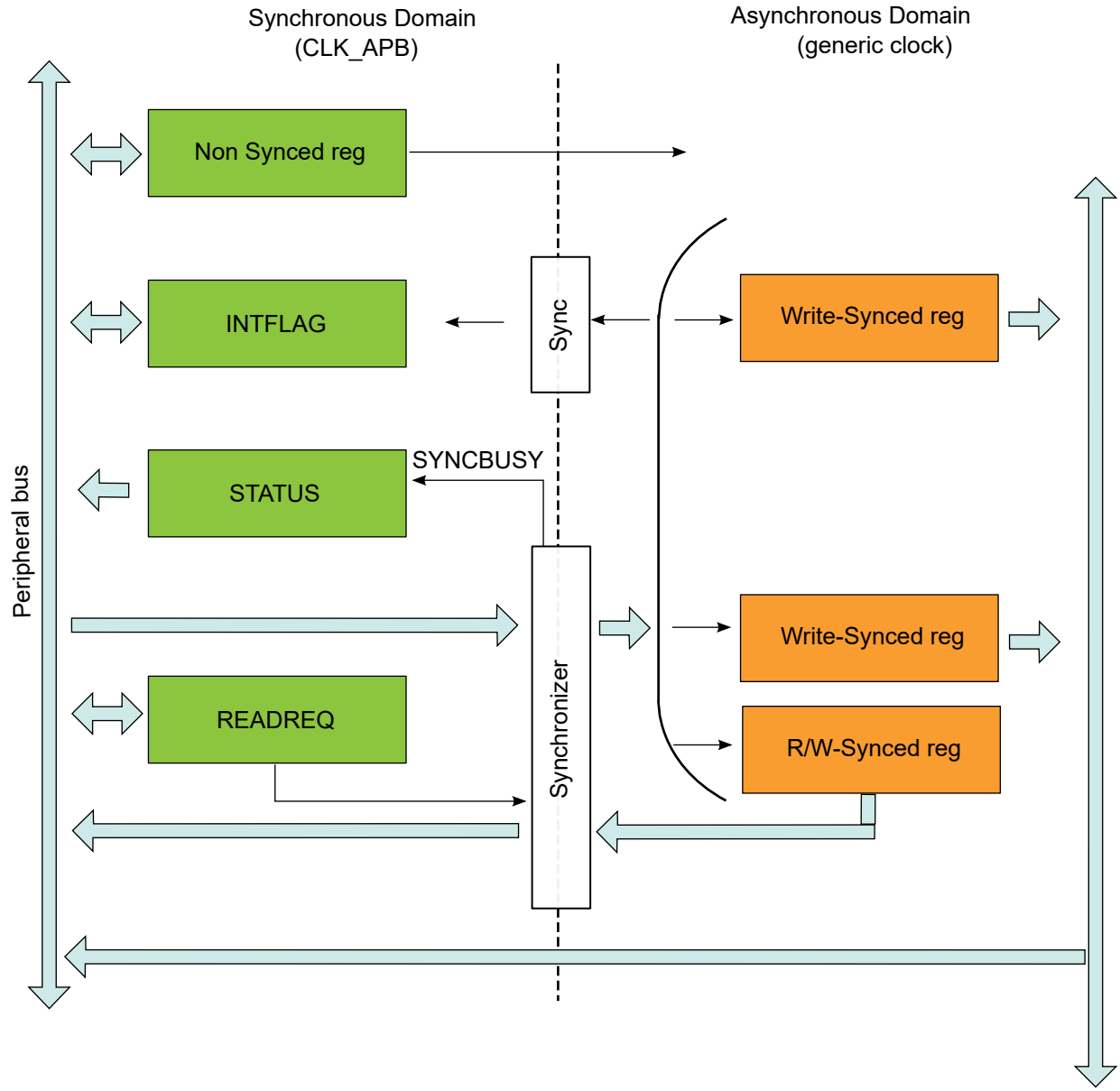

14.3.1.2 Write-Synchronization

Write-Synchronization is triggered by writing to a register in the peripheral clock domain. The Synchronization Busy bit in the Status register (STATUS.SYNCBUSY) will be set when the write-synchronization starts and cleared when the write-synchronization is complete. Refer to 14.3.1.8 Synchronization Delay for details on the synchronization delay.

When the write-synchronization is ongoing (STATUS.SYNCBUSY is one), any of the following actions will cause the peripheral bus to stall until the synchronization is complete:

- Writing a generic clock peripheral core register
- Reading a read-synchronized peripheral core register
- Reading the register that is being written (and thus triggered the synchronization)

Peripheral core registers without read-synchronization will remain static once they have been written and synchronized, and can be read while the synchronization is ongoing without causing the peripheral bus to stall. APB registers can also be read while the synchronization is ongoing without causing the peripheral bus to stall.

Downloaded from Arrow.com.

14.3.1.3 Read-Synchronization

Reading a read-synchronized peripheral core register will cause the peripheral bus to stall immediately until the read-synchronization is complete. STATUS.SYNCBUSY will not be set. Refer to 14.3.1.8 Synchronization Delay for details on the synchronization delay. Note that reading a read-synchronized peripheral core register while STATUS.SYNCBUSY is one will cause the peripheral bus to stall twice; first because of the ongoing synchronization, and then again because reading a read-synchronized core register will cause the peripheral bus to stall immediately.

14.3.1.4 Completion of synchronization

The user can either poll STATUS.SYNCBUSY or use the Synchronisation Ready interrupt (if available) to check when the synchronization is complete. It is also possible to perform the next read/write operation and wait, as this next operation will be started once the previous write/read operation is synchronized and/or complete.

14.3.1.5 Read Request

The read request functionality is only available to peripherals that have the Read Request register (READREQ) implemented. Refer to the register description of individual peripheral chapters for details.

To avoid forcing the peripheral bus to stall when reading read-synchronized Peripheral Core registers, the read request mechanism can be used.

Basic Read Request

Writing a '1' to the Read Request bit in the Read Request register (READREQ.RREQ) will request read synchronization of the register specified in the Address bits in READREQ (READREQ.ADDR) and set STATUS.SYNCBUSY. When read synchronization is complete, STATUS.SYNCBUSY is cleared. The read-synchronized value is then available for reading without delay until READREQ.RREQ is written to '1' again.

The address to use is the offset to the peripheral's base address of the register that should be synchronized.

Continuous Read Request

Writing a '1' to the Read Continuously bit in READREQ (READREQ.RCONT) will force continuous read synchronization of the register specified in READREQ.ADDR. The latest value is always available for reading without stalling the bus, as the synchronization mechanism is continuously synchronizing the given value. READREQ.RCONT prevents READREQ.RREQ from clearing automatically. For the continuous read mode, RREQ bit is required to be set once the RCONT bit is set.

SYNCBUSY is set for the first synchronization, but not for the subsequent synchronizations. If another synchronization is attempted, that is by executing a write-operation of a Write-synchronized register), the read request will be stopped, and will have to be manually restarted.

Note:
The continuous read synchronization is paused in sleep modes where the generic clock is not running. This means that a new read request is required if the value is needed immediately after exiting sleep.

14.3.1.6 Enable Write-Synchronization

Writing to the Enable bit in the Control register (CTRL.ENABLE) will also trigger write-synchronization and set STATUS.SYNCBUSY. CTRL.ENABLE will read its new value immediately after being written. The Synchronisation Ready interrupt (if available) cannot be used for Enable write-synchronization.

When the enable write-synchronization is ongoing (STATUS.SYNCBUSY is one), attempt to do any of the following will cause the peripheral bus to stall until the enable synchronization is complete:

- Writing a peripheral core register
- Writing an APB register
- Reading a read-synchronized peripheral core register

APB registers can be read while the enable write-synchronization is ongoing without causing the peripheral bus to stall.

14.3.1.7 Software Reset Write-Synchronization

Writing a '1' to the Software Reset bit in CTRL (CTRL.SWRST) will also trigger write-synchronization and set STATUS.SYNCBUSY. When writing a '1' to the CTRL.SWRST bit it will immediately read as '1'. CTRL.SWRST and STATUS.SYNCBUSY will be cleared by hardware when the peripheral has been reset. Writing a zero to the

Downloaded from Arrow.com.

CTRL.SWRST bit has no effect. The Synchronisation Ready interrupt (if available) cannot be used for Software Reset write-synchronization.

When the software reset is in progress (STATUS.SYNCBUSY and CTRL.SWRST are '1'), attempt to do any of the following will cause the peripheral bus to stall until the Software Reset synchronization and the reset is complete:

- Writing a peripheral core register
- Writing an APB register
- Reading a read-synchronized register

APB registers can be read while the software reset is being write-synchronized without causing the peripheral bus to stall.

14.3.1.8 Synchronization Delay

The synchronization will delay write and read accesses by a certain amount. This delay *D* is within the range of:

$$5 \times P_{\mathrm{GCLK}} + 2 \times P_{\mathrm{APB}} < D < 6 \times P_{\mathrm{GCLK}} + 3 \times P_{\mathrm{APB}}$$

Where P_{GCLK} is the period of the generic clock and P_{APB} is the period of the peripheral bus clock. A normal peripheral bus register access duration is $2 \times P_{\mathrm{APB}}$.

14.3.2 Distributed Synchronizer Register Synchronization

14.3.2.1 Overview

All peripherals are composed of one digital bus interface connected to the APB or AHB bus and running from a corresponding clock in the Main Clock domain, and one peripheral core running from the peripheral Generic Clock (GCLK).

Communication between these clock domains must be synchronized. This mechanism is implemented in hardware, so the synchronization process takes place even if the peripheral generic clock is running from the same clock source and on the same frequency as the bus interface.

All registers in the bus interface are accessible without synchronization. All registers in the peripheral core are synchronized when written. Some registers in the peripheral core are synchronized when read. Registers that need synchronization has this denoted in each individual register description.

14.3.2.2 General Write synchronization

Write-Synchronization is triggered by writing to a register in the peripheral clock domain. The respective bit in the Synchronization Busy register (SYNCBUSY) will be set when the write-synchronization starts and cleared when the write-synchronization is complete. Refer to 14.3.2.7 Synchronization Delay for details on the synchronization delay.

When write-synchronization is ongoing for a register, any subsequent write attempts to this register will be discarded, and an error will be reported.

Example:

REGA, REGB are 8-bit peripheral core registers. REGC is 16-bit peripheral core register.

Offset	Register
0x00	REGA
0x01	REGB
0x02	REGC
0x03	

Synchronization is per register, so multiple registers can be synchronized in parallel. Consequently, after REGA (8-bit access) was written, REGB (8-bit access) can be written immediately without error.

REGC (16-bit access) can be written without affecting REGA or REGB. If REGC is written to in two consecutive 8-bit accesses without waiting for synchronization, the second write attempt will be discarded and an error is generated.

A 32-bit access to offset 0x00 will write all three registers. Note that REGA, REGB and REGC can be updated at different times because of independent write synchronization.

Downloaded from Arrow.com.

14.3.2.3 General read synchronization

Read-synchronized registers are synchronized when the register value is updated. During synchronization the corresponding bit in SYNCBUSY will be set. Reading a read-synchronized register will return its value immediately and the corresponding bit in SYNCBUSY will not be set.

14.3.2.4 Completion of synchronization

In order to check if synchronization is complete, the user can either poll the relevant bits in SYNCBUSY or use the Synchronisation Ready interrupt (if available). The Synchronization Ready interrupt flag will be set when all ongoing synchronizations are complete, i.e. when all bits in SYNCBUSY are '0'.

14.3.2.5 Enable Write-Synchronization

Setting the Enable bit in a module's Control register (CTRL.ENABLE) will also trigger write-synchronization and set SYNCBUSY.ENABLE. CTRL.ENABLE will read its new value immediately after being written. SYNCBUSY.ENABLE will be cleared by hardware when the operation is complete. The Synchronisation Ready interrupt (if available) cannot be used for Enable write-synchronization.

14.3.2.6 Software Reset Write-Synchronization

Setting the Software Reset bit in CTRLA (CTRLA.SWRST=1) will trigger write-synchronization and set SYNCBUSY.SWRST. When writing a ‘1’ to the CTRLA.SWRST bit it will immediately read as ‘1’. CTRL.SWRST and SYNCBUSY.SWRST will be cleared by hardware when the peripheral has been reset. Writing a '0' to the CTRL.SWRST bit has no effect. The Ready interrupt (if available) cannot be used for Software Reset write-synchronization.

14.3.2.7 Synchronization Delay

The synchronization will delay write and read accesses by a certain amount. This delay *D* is within the range of:

$$5 \times P_{\mathrm{GCLK}} + 2 \times P_{\mathrm{APB}} < D < 6 \times P_{\mathrm{GCLK}} + 3 \times P_{\mathrm{APB}}$$

Where P_{GCLK} is the period of the generic clock and P_{APB} is the period of the peripheral bus clock. A normal peripheral bus register access duration is $2 \times P_{\mathrm{APB}}$.

14.4 Enabling a Peripheral

In order to enable a peripheral that is clocked by a Generic Clock, the following parts of the system needs to be configured:

- A running Clock Source.
- A clock from the Generic Clock Generator must be configured to use one of the running Clock Sources, and the Generator must be enabled.
- The Generic Clock Multiplexer that provides the Generic Clock signal to the peripheral must be configured to use a running Generic Clock Generator, and the Generic Clock must be enabled.
- The user interface of the peripheral needs to be unmasked in the PM. If this is not done the peripheral registers will read all 0’s and any writing attempts to the peripheral will be discarded.

14.5 Disabling a Peripheral

When disabling a peripheral and if a pin change interrupt is enabled on pins driven by the respective peripheral, a wake condition may be generated. If this happen the interrupt flag will not be set. As a consequence the system will not be able to identify the wake source. To avoid this, the interrupt enable register of the peripheral must be cleared (or the Nested Vectored Interrupt Controller (NVIC) Enable for the peripheral must be cleared) before disabling the peripheral.

Downloaded from Arrow.com.

14.6 On-demand, Clock Requests

Figure 14-4. Clock request routing

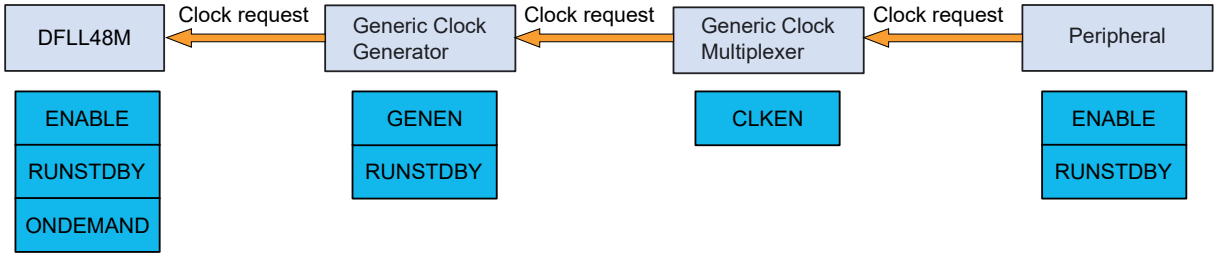

All clock sources in the system can be run in an on-demand mode: the clock source is in a stopped state unless a peripheral is requesting the clock source. Clock requests propagate from the peripheral, via the GCLK, to the clock source. If one or more peripheral is using a clock source, the clock source will be started/kept running. As soon as the clock source is no longer needed and no peripheral has an active request, the clock source will be stopped until requested again.

The clock request can reach the clock source only if the peripheral, the generic clock and the clock from the Generic Clock Generator in-between are enabled. The time taken from a clock request being asserted to the clock source being ready is dependent on the clock source startup time, clock source frequency as well as the divider used in the Generic Clock Generator. The total startup time Tstart from a clock request until the clock is available for the peripheral is between:

T_{start_max} = Clock source startup time + 2 × clock source periods + 2 × divided clock source periods

T_{start_min} = Clock source startup time + 1 × clock source period + 1 × divided clock source period

The time between the last active clock request stopped and the clock is shut down, T_{stop}, is between:

T_{stop_min} = 1 × divided clock source period + 1 × clock source period

T_{stop_max} = 2 × divided clock source periods + 2 × clock source periods

The On-Demand function can be disabled individually for each clock source by clearing the ONDEMAND bit located in each clock source controller. Consequently, the clock will always run whatever the clock request status is. This has the effect of removing the clock source startup time at the cost of power consumption.

The clock request mechanism can be configured to work in standby mode by setting the RUNSDTBY bits of the modules, see Figure 14-4.

14.7 Power Consumption vs. Speed

When targeting for either a low-power or a fast acting system, some considerations have to be taken into account due to the nature of the asynchronous clocking of the peripherals:

If clocking a peripheral with a very low clock, the active power consumption of the peripheral will be lower. At the same time the synchronization to the synchronous (CPU) clock domain is dependent on the peripheral clock speed, and will take longer with a slower peripheral clock. This will cause worse response times and longer synchronization delays.

14.8 Clocks after Reset

On any reset the synchronous clocks start to their initial state:

- OSC8M is enabled and divided by 8
- Generic Generator 0 uses OSC8M as source and generates GCLK_MAIN
- CPU and BUS clocks are undivided

On a Power Reset, the GCLK module starts to its initial state:

- All Generic Clock Generators are disabled except

Downloaded from Arrow.com.

  - Generator 0 is using OSC8M as source without division and generates GCLK_MAIN
  - Generator 2 uses OSCULP32K as source without division
- All Generic Clocks are disabled except:
  - WDT Generic Clock uses the Generator 2 as source

On a User Reset the GCLK module starts to its initial state, except for:

- Generic Clocks that are write-locked , i.e., the according WRTLOCK is set to 1 prior to Reset or WDT Generic Clock if the WDT Always-On at power on bit set in the NVM User Row
- Generic Clock is dedicated to the RTC if the RTC Generic Clock is enabled

On any reset the clock sources are reset to their initial state except the 32KHz clock sources which are reset only by a power reset.

Downloaded from Arrow.com.

15. GCLK - Generic Clock Controller

15.1 Overview

Depending on the application, peripherals may require specific clock frequencies to operate correctly. The Generic Clock controller GCLK provides nine Generic Clock Generators that can provide a wide range of clock frequencies.

Generators can be set to use different external and internal oscillators as source. The clock of each Generator can be divided. The outputs from the Generators are used as sources for the Generic Clock Multiplexers, which provide the Generic Clock (GCLK_PERIPHERAL) to the peripheral modules, as shown in Generic Clock Controller Block Diagram. The number of Peripheral Clocks depends on how many peripherals the device has.
Note: The Generator 0 is always the direct source of the GCLK_MAIN signal.

15.2 Features

- Provides Generic Clocks
- Wide frequency range
- Clock source for the generator can be changed on the fly

15.3 Block Diagram

The generation of Peripheral Clock signals (GCLK_PERIPHERAL) and the Main Clock (GCLK_MAIN) can be seen in the figure below.

Figure 15-1. Device Clocking Diagram

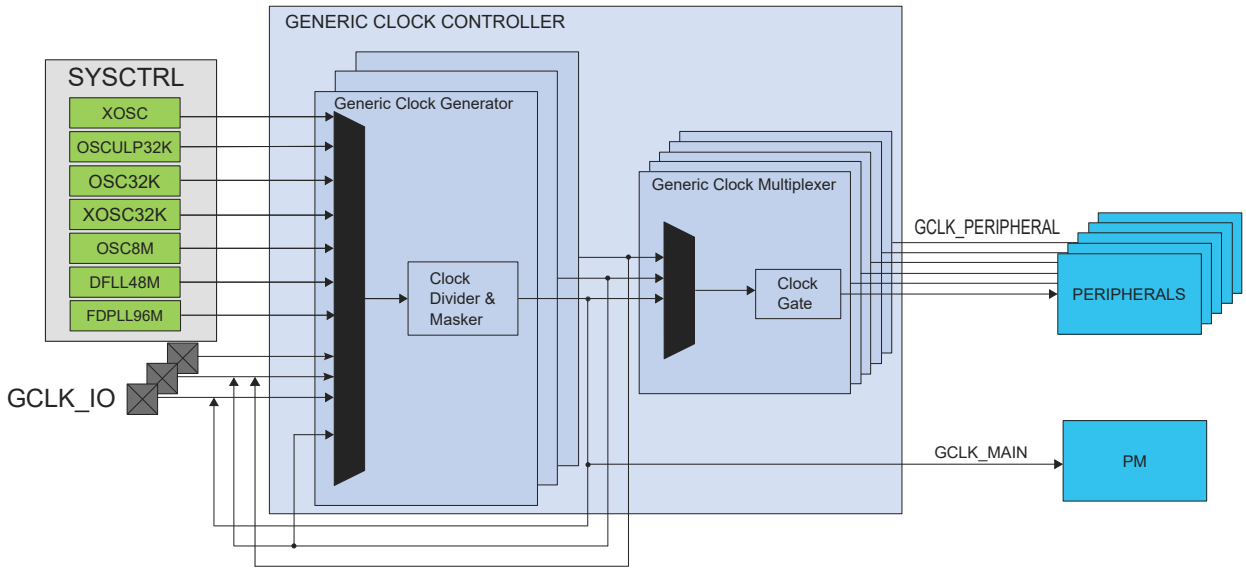

The GCLK block diagram is shown in the next figure.

Downloaded from Arrow.com.

Figure 15-2. Generic Clock Controller Block Diagram(1)

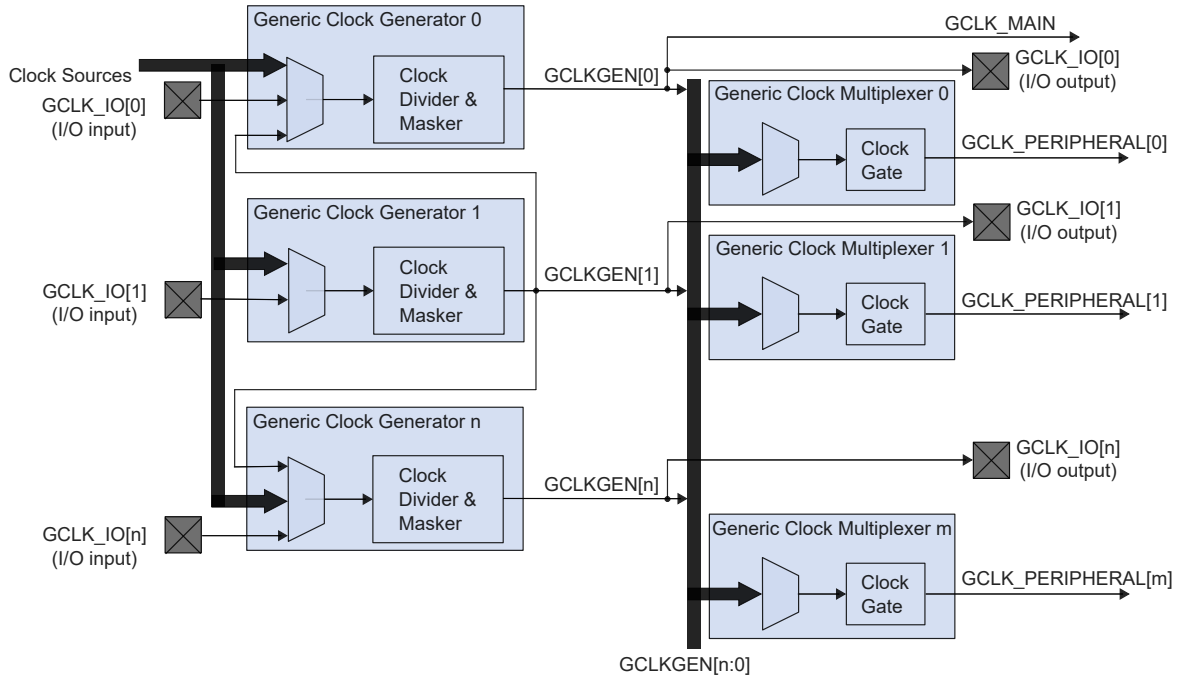

Note: 1. If GENCTRL.SRC=0x01(GCLKIN), the GCLK_IO is set as an input.

15.4 Signal Description

Table 15-1. Signal Description

Signal Name	Type	Description
GCLK_IO[7:0]	Digital I/O	Clock source for Generators when input Generic Clock signal when output

Refer to PORT Function Multiplexing table in I/O Multiplexing and Considerations for details on the pin mapping for this peripheral.
Note: One signal can be mapped on several pins.

Related Links
7. I/O Multiplexing and Considerations

15.5 Product Dependencies

In order to use this peripheral, other parts of the system must be configured correctly, as described below.

15.5.1 I/O Lines

Using the GCLK I/O lines requires the I/O pins to be configured.

Related Links
23. PORT - I/O Pin Controller

15.5.2 Power Management

The GCLK can operate in sleep modes, if required. Refer to the sleep mode description in the Power Manager (PM) section.

Downloaded from Arrow.com.

Related Links
16. PM – Power Manager

15.5.3 Clocks

The GCLK bus clock (CLK_GCLK_APB) can be enabled and disabled in the Power Manager, and the default state of CLK_GCLK_APB can be found in the Peripheral Clock Masking section of PM – Power Manager.

Related Links
16. PM – Power Manager

15.5.4 DMA

Not applicable.

15.5.5 Interrupts

Not applicable.

15.5.6 Events

Not applicable.

15.5.7 Debug Operation

Not applicable.

15.5.8 Register Access Protection

All registers with write-access can be optionally write-protected by the Peripheral Access Controller (PAC).

Note: Optional write-protection is indicated by the "PAC Write-Protection" property in the register description.

Write-protection does not apply for accesses through an external debugger.

Related Links
11.6 Peripheral Access Controller (PAC)

15.5.9 Analog Connections

Not applicable.

15.6 Functional Description

15.6.1 Principle of Operation

The GCLK module is comprised of eight Generic Clock Generators (Generators) sourcing m Generic Clock Multiplexers.

A clock source selected as input to a Generator can either be used directly, or it can be prescaled in the Generator. A generator output is used as input to one or more the Generic Clock Multiplexers to provide a peripheral (GCLK_PERIPHERAL). A generic clock can act as the clock to one or several of peripherals.

15.6.2 Basic Operation

15.6.2.1 Initialization

Before a Generator is enabled, the corresponding clock source should be enabled. The Peripheral clock must be configured as outlined by the following steps:

1. The Generic Clock Generator division factor must be set by performing a single 32-bit write to the Generic Clock Generator Division register (GENDIV):
   – The Generic Clock Generator that will be selected as the source of the generic clock by setting the ID bit group (GENDIV.ID).

Downloaded from Arrow.com.

– The division factor must be selected by the DIV bit group (GENDIV.DIV)
Note: Refer to *Generic Clock Generator Division register (GENDIV)* for details.

2. The generic clock generator must be enabled by performing a single 32-bit write to the Generic Clock Generator Control register (GENCTRL):
   – The Generic Clock Generator will be selected as the source of the generic clock by the ID bit group (GENCTRL.ID)
   – The Generic Clock generator must be enabled (GENCTRL.GENEN=1)
   Note: Refer to *Generic Clock Generator Control register (GENCTRL)* for details.
3. The generic clock must be configured by performing a single 16-bit write to the Generic Clock Control register (CLKCTRL):
   – The Generic Clock that will be configured via the ID bit group (CLKCTRL.ID)
   – The Generic Clock Generator used as the source of the generic clock by writing the GEN bit group (CLKCTRL.GEN)
   Note: Refer to *Generic Clock Control register (CLKCTRL)* for details.

Related Links
15.8.5 GENDIV
15.8.4 GENCTRL
15.8.3 CLKCTRL

15.6.2.2 Enabling, Disabling and Resetting

The GCLK module has no enable/disable bit to enable or disable the whole module.

The GCLK is reset by setting the Software Reset bit in the Control register (CTRL.SWRST) to 1. All registers in the GCLK will be reset to their initial state, except for Generic Clocks Multiplexer and associated Generators that have their Write Lock bit set to 1 (CLKCTRL.WRTLOCK). For further details, refer to 15.6.3.4 Configuration Lock.

15.6.2.3 Generic Clock Generator

Each Generator (GCLK_GEN) can be set to run from one of eight different clock sources except GCLKGEN[1], which can be set to run from one of seven sources. GCLKGEN[1] is the only Generator that can be selected as source to other Generators but can not act as source to itself.

Each generator GCLKGEN[x] can be connected to one specific pin GCLK_IO[x]. The GCLK_IO[x] can be set to act as source to GCLKGEN[x] or GCLK_IO[x] can be set up to output the clock generated by GCLKGEN[x].

The selected source can be divided. Each Generator can be enabled or disabled independently.

Each GCLKGEN clock signal can then be used as clock source for Generic Clock Multiplexers. Each Generator output is allocated to one or several Peripherals.

GCLKGEN[0], is used as GCLK_MAIN for the synchronous clock controller inside the Power Manager.

Refer to *PM-Power Manager* for details on the synchronous clock generation.

Figure 15-3. Generic Clock Generator

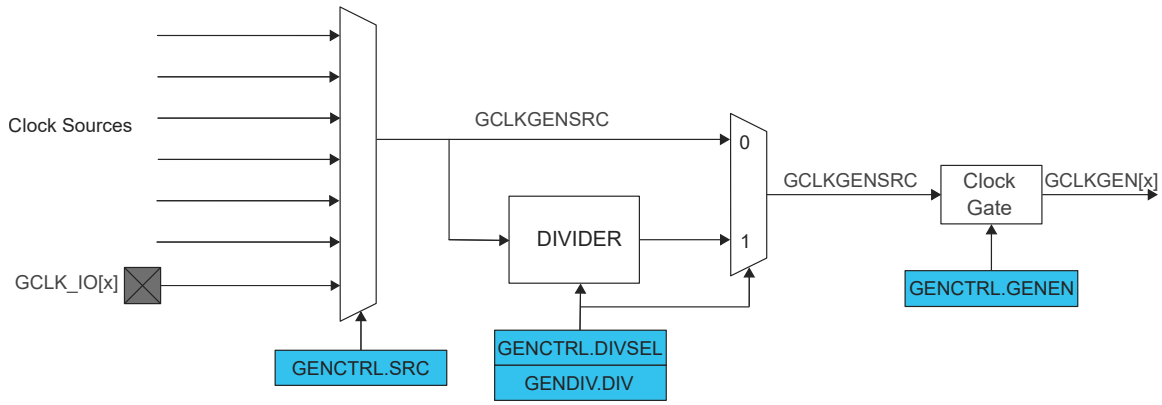

Related Links
16. PM – Power Manager

Downloaded from Arrow.com.

15.6.2.4 Enabling a Generic Clock Generator

A Generator is enabled by setting the Generic Clock Generator Enable bit in the Generic Clock Generator Control register (GENCTRL.GENEN=1).

15.6.2.5 Disabling a Generic Clock Generator

A Generator is disabled by clearing GENCTRL.GENEN. When GENCTRL.GENEN=0, the GCLKGEN clock is disabled and clock gated.

15.6.2.6 Selecting a Clock Source for the Generic Clock Generator

Each Generator can individually select a clock source by setting the Source Select bit group in GENCTRL (GENCTRL.SRC).

Changing from one clock source, for example A, to another clock source, B, can be done on the fly: If clock source B is not ready, the Generator will continue running with clock source A. As soon as clock source B is ready, however, the generic clock generator will switch to it. During the switching operation, the Generator holds clock requests to clock sources A and B and then releases the clock source A request when the switch is done.

The available clock sources are device dependent (usually the crystal oscillators, RC oscillators, PLL and DFLL). Only GCLKGEN[1] can be used as a common source for all other generators except Generator 1.

Note: Before switching the Generic Clock Generator 0 (GCLKGEN0) from a clock source A to another clock source B, enable the "ONDEMAND" feature of the clock source A to ensure a proper transition from clock source A to clock source B.

15.6.2.7 Changing Clock Frequency

The selected source (GENCLKSRC) for a Generator can be divided by writing a division value in the Division Factor bit group in the Generic Clock Generator Division register (GENDIV.DIV). How the actual division factor is calculated is depending on the Divide Selection bit in GENCTRL (GENCTRL.DIVSEL), it can be interpreted in two ways by the integer divider.

Note: The number of DIV bits for each Generator is device dependent.

15.6.2.8 Duty Cycle

When dividing a clock with an odd division factor, the duty-cycle will not be 50/50. Writing the Improve Duty Cycle bit in GENCTRL (GENCTRL.IDC=1) will result in a 50/50 duty cycle.

15.6.2.9 Generic Clock Output on I/O Pins

Each Generator's output can be directed to a GCLK_IO pin. If the Output Enable bit in GENCTRL is '1' (GENCTRL.OE=1) and the Generator is enabled (GENCTRL.GENEN=1), the Generator requests its clock source and the GCLKGEN clock is output to a GCLK_IO pin. If GENCTRL.OE=0, GCLK_IO is set according to the Output Off Value bit. If the Output Off Value bit in GENCTRL (GENCTRL.OOV) is zero, the output clock will be low when generic clock generator is turned off. If GENCTRL.OOV=1, the output clock will be high when Generator is turned off.

In standby mode, if the clock is output (GENCTRL.OE=1), the clock on the GCLK_IO pin is frozen to the OOV value if the Run In Standby bit in GENCTRL (GENCTRL.RUNSTDBY) is zero. If GENCTRL.RUNSTDBY=1, the GCLKGEN clock is kept running and output to GCLK_IO.

Downloaded from Arrow.com.

15.6.3 Generic Clock

Figure 15-4. Generic Clock Multiplexer

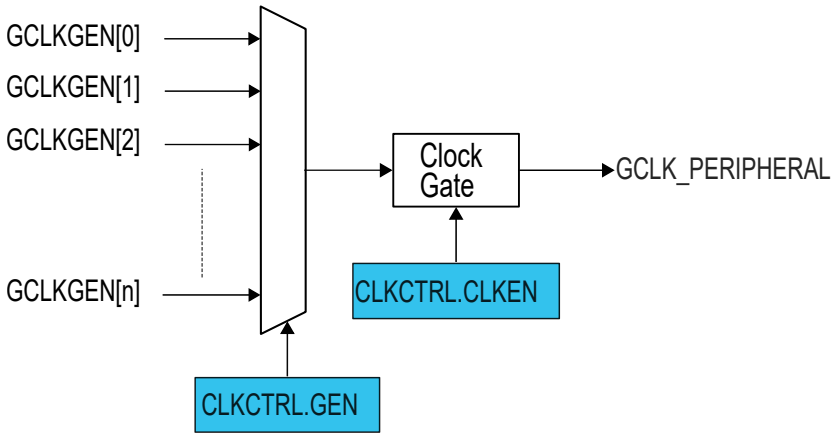

15.6.3.1 Enabling a Generic Clock

Before a generic clock is enabled, one of the Generators must be selected as the source for the generic clock by writing to CLKCTRL.GEN. The clock source selection is individually set for each generic clock.

When a Generator has been selected, the generic clock is enabled by setting the Clock Enable bit in CLKCTRL (CLKCTRL.CLKEN=1). The CLKCTRL.CLKEN bit must be synchronized to the generic clock domain. CLKCTRL.CLKEN will continue to read as its previous state until the synchronization is complete.

15.6.3.2 Disabling a Generic Clock

A generic clock is disabled by writing CLKCTRL.CLKEN=0. The SYNCBUSY bit will be cleared when this write-synchronization is complete. CLKCTRL.CLKEN will stay in its previous state until the synchronization is complete. The generic clock is gated when disabled.

15.6.3.3 Selecting a Clock Source for the Generic Clock

When changing a generic clock source by writing to CLKCTRL.GEN, the generic clock must be disabled before being re-enabled with the new clock source setting. This prevents glitches during the transition:

1. Write CLKCTRL.CLKEN=0
2. Assert that CLKCTRL.CLKEN reads '0'
3. Change the source of the generic clock by writing CLKCTRL.GEN
4. Re-enable the generic clock by writing CLKCTRL.CLKEN=1

15.6.3.4 Configuration Lock

The generic clock configuration can be locked for further write accesses by setting the Write Lock bit in the CLKCTRL register (CLKCTRL.WRTLOCK). All writes to the CLKCTRL register will be ignored. It can only be unlocked by a Power Reset.

The Generator source of a locked generic clock are also locked, too: The corresponding GENCTRL and GENDIV are locked, and can be unlocked only by a Power Reset.

There is one exception concerning the GCLKGEN[0]. As it is used as GCLK_MAIN, it can not be locked. It is reset by any Reset and will start up in a known configuration. The software reset (CTRL.SWRST) can not unlock the registers.

15.6.4 Additional Features

15.6.4.1 Indirect Access

The Generic Clock Generator Control and Division registers (GENCTRL and GENDIV) and the Generic Clock Control register (CLKCTRL) are indirectly addressed as shown in the next figure.

Downloaded from Arrow.com.

Figure 15-5. GCLK Indirect Access

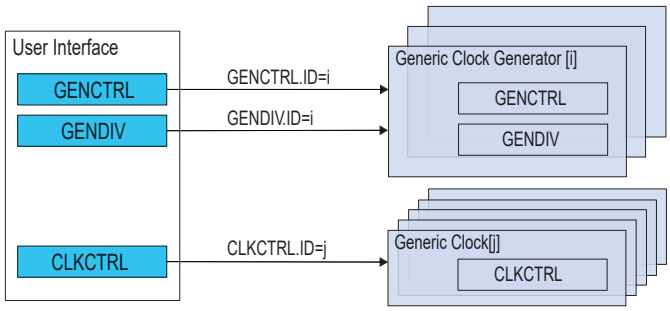

Writing these registers is done by setting the corresponding ID bit group. To read a register, the user must write the ID of the channel, i, in the corresponding register. The value of the register for the corresponding ID is available in the user interface by a read access.

For example, the sequence to read the GENCTRL register of generic clock generator i is:

1. Do an 8-bit write of the i value to GENCTRL.ID
2. Read the value of GENCTRL

15.6.4.2 Generic Clock Enable after Reset

The Generic Clock Controller must be able to provide a generic clock to some specific peripherals after a reset. That means that the configuration of the Generators and generic clocks after Reset is device-dependent.

Refer to *GENCTRL.ID* for details on GENCTRL reset.

Refer to *GENDIV.ID* for details on GENDIV reset.

Refer to *CLKCTRL.ID* for details on CLKCTRL reset.

Related Links

15.8.5 GENDIV
15.8.4 GENCTRL
15.8.3 CLKCTRL

15.6.5 Sleep Mode Operation

15.6.5.1 Sleep Walking

The GCLK module supports the Sleep Walking feature. If the system is in a sleep mode where the Generic Clocks are stopped, a peripheral that needs its clock in order to execute a process must request it from the Generic Clock Controller.

The Generic Clock Controller receives this request, determines which Generic Clock Generator is involved and which clock source needs to be awakened. It then wakes up the respective clock source, enables the Generator and generic clock stages successively, and delivers the clock to the peripheral.

15.6.5.2 Run in Standby Mode

In standby mode, the GCLK can continuously output the generator output to GCLK_IO.

When set, the GCLK can continuously output the generator output to GCLK_IO.

Refer to 15.6.2.9 Generic Clock Output on I/O Pins for details.

15.6.6 Synchronization

Due to asynchronicity between the main clock domain and the peripheral clock domains, some registers need to be synchronized when written or read.

When executing an operation that requires synchronization, the Synchronization Busy bit in the Status register (STATUS.SYNCBUSY) will be set immediately, and cleared when synchronization is complete.

Downloaded from Arrow.com.

If an operation that requires synchronization is executed while STATUS.SYNCBUSY=1, the bus will be stalled. All operations will complete successfully, but the CPU will be stalled and interrupts will be pending as long as the bus is stalled.

The following registers are synchronized when written:

- Generic Clock Generator Control register (GENCTRL)
- Generic Clock Generator Division register (GENDIV)
- Control register (CTRL)

Required write-synchronization is denoted by the "Write-Synchronized" property in the register description.

Related Links

14.3 Register Synchronization

Downloaded from Arrow.com.

15.7 Register Summary

Offset	Name	Bit Pos.	7	6	5	4	3	2	1	0
0x00	CTRL	7:0								SWRST
0x01	STATUS	7:0	SYNCBUSY							
0x02	CLKCTRL	7:0			ID[5:0]					
		15:8	WRTLOCK	CLKEN			GEN[3:0]			
0x04	GENCTRL	7:0					ID[3:0]			
		15:8				SRC[4:0]				
		23:16			RUNSTDBY	DIVSEL	OE	OOV	IDC	GENEN
		31:24								
0x08	GENDIV	7:0					ID[3:0]			
		15:8	DIV[7:0]							
		23:16	DIV[15:8]							
		31:24								

15.8 Register Description

Registers can be 8, 16, or 32 bits wide. Atomic 8-, 16-, and 32-bit accesses are supported. In addition, the 8-bit quarters and 16-bit halves of a 32-bit register, and the 8-bit halves of a 16-bit register can be accessed directly.

Some registers require synchronization when read and/or written. Synchronization is denoted by the "Read-Synchronized" and/or "Write-Synchronized" property in each individual register description.

Refer to 15.5.8 Register Access Protection for details.

Some registers are enable-protected, meaning they can only be written when the module is disabled. Enable-protection is denoted by the "Enable-Protected" property in each individual register description.

Refer to 15.6.6 Synchronization for details.

Downloaded from Arrow.com.

15.8.1 Control

Name: CTRL
Offset: 0x0
Reset: 0x00
Property: Write-Protected, Write-Synchronized

Bit	7	6	5	4	3	2	1	0
								SWRST
Access								R/W
Reset								0

Bit 0 – SWRST Software Reset
Writing a zero to this bit has no effect.
Writing a one to this bit resets all registers in the GCLK to their initial state after a power reset, except for generic clocks and associated generators that have their WRTLOCK bit in CLKCTRL read as one.
Refer to *GENCTRL.ID* for details on GENCTRL reset.
Refer to *GENDIV.ID* for details on GENDIV reset.
Refer to *CLKCTRL.ID* for details on CLKCTRL reset.
Due to synchronization, there is a delay from writing CTRL.SWRST until the reset is complete. CTRL.SWRST and STATUS.SYNCBUSY will both be cleared when the reset is complete.

Value	Description
0	There is no reset operation ongoing.
1	There is a reset operation ongoing.

Downloaded from Arrow.com.

15.8.2 Status

Name: STATUS
Offset: 0x1
Reset: 0x00
Property: -

Bit	7	6	5	4	3	2	1	0
	SYNCBUSY							
Access	R							
Reset	0							

Bit 7 – SYNCBUSY Synchronization Busy Status
This bit is cleared when the synchronization of registers between the clock domains is complete.
This bit is set when the synchronization of registers between clock domains is started.

Downloaded from Arrow.com.

15.8.3 Generic Clock Control

Name: CLKCTRL
Offset: 0x2
Reset: 0x0000
Property: Write-Protected

Bit	15	14	13	12	11	10	9	8
	WRTLOCK	CLKEN			GEN[3:0]			
Access	R/W	R/W			R/W	R/W	R/W	R/W
Reset	0	0			0	0	0	0

Bit	7	6	5	4	3	2	1	0
			ID[5:0]					
Access			R/W	R/W	R/W	R/W	R/W	R/W
Reset			0	0	0	0	0	0

Bit 15 – WRTLOCK Write Lock
When this bit is written, it will lock from further writes the generic clock pointed to by CLKCTRL.ID, the generic clock generator pointed to in CLKCTRL.GEN and the division factor used in the generic clock generator. It can only be unlocked by a Power Reset.
One exception to this is generic clock generator 0, which cannot be locked.

Value	Description
0	The generic clock and the associated generic clock generator and division factor are not locked
1	The generic clock and the associated generic clock generator and division factor are locked

Bit 14 – CLKEN Clock Enable
This bit is used to enable and disable a generic clock.

Value	Description
0	The generic clock is disabled
1	The generic clock is enabled

Bits 11:8 – GEN[3:0] Generic Clock Generator
These bits define the Generic Clock Generator which will be associated with the peripheral GCLK clock defined in the CLKCTRL.ID.

Table 15-2. Generic Clock Generator

GEN[3:0]	Name	Description
0x0	GCLKGEN0	Generic clock generator 0
0x1	GCLKGEN1	Generic clock generator 1
0x2	GCLKGEN2	Generic clock generator 2
0x3	GCLKGEN3	Generic clock generator 3
0x4	GCLKGEN4	Generic clock generator 4
0x5	GCLKGEN5	Generic clock generator 5
0x6	GCLKGEN6	Generic clock generator 6
0x7	GCLKGEN7	Generic clock generator 7
0x8	GCLKGEN8	Generic clock generator 8
0x9-0xF	-	Reserved

Bits 5:0 – ID[5:0] Generic Clock Selection ID
These bits select the peripheral GCLK clock which will be associated with the Generic Clock Generator defined in the CLKCTRL.GEN. The third table below provides the ID number for each possible peripheral GCLK clock..
A Power Reset will reset the CLKCTRL register for all IDs, including the RTC. If the WRTLOCK bit of the corresponding ID is zero and the ID is not the RTC, a user Reset will reset the CLKCTRL register for this ID.
After a Power Reset, the Reset value of the CLKCTRL register versus module instance is as shown in the next table.

Downloaded from Arrow.com.

Table 15-3. CLKCTRL Value after Power Reset for each Peripheral GCLK clock ID

Module Instance	Reset Value after Power Reset		
	CLKCTRL.GEN	CLKCTRL.CLKEN	CLKCTRL.WRTLOCK
RTC (ID = 0x04)	0x00	0x00	0x00
WDT (ID = 0x03)	0x02	0x01 if WDT Enable bit in NVM User Row written to one 0x00 if WDT Enable bit in NVM User Row written to zero	0x01 if WDT Always-On bit in NVM User Row written to one 0x00 if WDT Always-On bit in NVM User Row written to zero
Others	0x00	0x00	0x00

After a user Reset, the Reset value of the CLKCTRL register versus module instance is as shown in the table below.

Table 15-4. CLKCTRL Value after User Reset for each Peripheral GCLK clock ID

Module Instance	Reset Value after a User Reset		
	CLKCTRL.GEN	CLCTRL.CLKEN	CLKCTRL.WRTLOCK
RTC (ID = 0x04)	0x00 if WRTLOCK=0 and CLKEN=0 No change if WRTLOCK=1 or CLKEN=1	0x00 if WRTLOCK=0 and CLKEN=0 No change if WRTLOCK=1 or CLKEN=1	No change
WDT (ID = 0x03)	0x02 if WRTLOCK=0 No change if WRTLOCK=1	If WRTLOCK=0 0x01 if WDT Enable bit in NVM User Row written to one 0x00 if WDT Enable bit in NVM User Row written to zero If WRTLOCK=1 no change	No change
Others	0x00 if WRTLOCK=0 No change if WRTLOCK=1	0x00 if WRTLOCK=0 No change if WRTLOCK=1	No change

Value	Name	Description
0x00	GCLK_DFLL48M_REF	DFLL48M Reference
0x01	GCLK_DPLL	FDPLL96M input clock source for reference
0x02	GCLK_DPLL_32K	FDPLL96M 32 kHz clock for FDPLL96M internal lock timer
0x03	GCLK_WDT	WDT
0x04	GCLK_RTC	RTC
0x05	GCLK_EIC	EIC
0x06	GCLK_USB	USB
0x07	GCLK_EVSYS_CHANNEL_0	EVSYS_CHANNEL_0
0x08	GCLK_EVSYS_CHANNEL_1	EVSYS_CHANNEL_1
0x09	GCLK_EVSYS_CHANNEL_2	EVSYS_CHANNEL_2
0x0A	GCLK_EVSYS_CHANNEL_3	EVSYS_CHANNEL_3
0x0B	GCLK_EVSYS_CHANNEL_4	EVSYS_CHANNEL_4
0x0C	GCLK_EVSYS_CHANNEL_5	EVSYS_CHANNEL_5
0x0D	GCLK_EVSYS_CHANNEL_6	EVSYS_CHANNEL_6
0x0E	GCLK_EVSYS_CHANNEL_7	EVSYS_CHANNEL_7
0x0F	GCLK_EVSYS_CHANNEL_8	EVSYS_CHANNEL_8
0x10	GCLK_EVSYS_CHANNEL_9	EVSYS_CHANNEL_9
0x11	GCLK_EVSYS_CHANNEL_10	EVSYS_CHANNEL_10
0x12	GCLK_EVSYS_CHANNEL_11	EVSYS_CHANNEL_11
0x13	GCLK_SERCOMx_SLOW	SERCOMx_SLOW
0x14	GCLK_SERCOM0_CORE	SERCOM0_CORE
0x15	GCLK_SERCOM1_CORE	SERCOM1_CORE
0x16	GCLK_SERCOM2_CORE	SERCOM2_CORE
0x17	GCLK_SERCOM3_CORE	SERCOM3_CORE
0x18	GCLK_SERCOM4_CORE	SERCOM4_CORE

Downloaded from Arrow.com.

Value	Name	Description
0x19	GCLK_SERCOM5_CORE	SERCOM5_CORE
0x1A	GCLK_TCC0, GCLK_TCC1	TCC0,TCC1
0x1B	GCLK_TCC2, GCLK_TC3	TCC2,TC3
0x1C	GCLK_TC4, GCLK_TC5	TC4,TC5
0x1D	GCLK_TC6, GCLK_TC7	TC6,TC7
0x1E	GCLK_ADC	ADC
0x1F	GCLK_AC_DIG, GCLK_AC1_DIG	AC_DIG, AC1_DIG
0x20	GCLK_AC_ANA, GCLK_AC1_ANA	AC_ANA, AC1_ANA
0x21	GCLK_DAC	DAC
0x22	GCLK_PTC	PTC
0x23	GCLK_I2S_0	I2S_0
0x24	GCLK_I2S_1	I2S_1
0x25	GCLK_TCC3	TCC3
0x26-0x3F	-	Reserved

Downloaded from Arrow.com.

15.8.4 Generic Clock Generator Control

Name: GENCTRL
Offset: 0x4
Reset: 0x00000000
Property: Write-Protected, Write-Synchronized

Bit	31	30	29	28	27	26	25	24
Access								
Reset								

Bit	23	22	21	20	19	18	17	16
			RUNSTDBY	DIVSEL	OE	OOV	IDC	GENEN
Access			R/W	R/W	R/W	R/W	R/W	R/W
Reset			0	0	0	0	0	0

Bit	15	14	13	12	11	10	9	8
				SRC[4:0]				
Access				R/W	R/W	R/W	R/W	R/W
Reset				0	0	0	0	0

Bit	7	6	5	4	3	2	1	0
					ID[3:0]			
Access					R/W	R/W	R/W	R/W
Reset					0	0	0	0

Bit 21 – RUNSTDBY Run in Standby
This bit is used to keep the generic clock generator running when it is configured to be output to its dedicated GCLK_IO pin. If GENCTRL.OE is zero, this bit has no effect and the generic clock generator will only be running if a peripheral requires the clock.

Value	Description
0	The generic clock generator is stopped in standby and the GCLK_IO pin state (one or zero) will be dependent on the setting in GENCTRL.OOV.
1	The generic clock generator is kept running and output to its dedicated GCLK_IO pin during standby mode.

Bit 20 – DIVSEL Divide Selection
This bit is used to decide how the clock source used by the generic clock generator will be divided. If the clock source should not be divided, the DIVSEL bit must be zero and the GENDIV.DIV value for the corresponding generic clock generator must be zero or one.

Value	Description
0	The generic clock generator equals the clock source divided by GENDIV.DIV.
1	The generic clock generator equals the clock source divided by 2^(GENDIV.DIV+1).

Bit 19 – OE Output Enable
This bit is used to enable output of the generated clock to GCLK_IO when GCLK_IO is not selected as a source in the GENCLK.SRC bit group.

Value	Description
0	The generic clock generator is not output.
1	The generic clock generator is output to the corresponding GCLK_IO, unless the corresponding GCLK_IO is selected as a source in the GENCLK.SRC bit group.

Bit 18 – OOV Output Off Value
This bit is used to control the value of GCLK_IO when GCLK_IO is not selected as a source in the GENCLK.SRC bit group.

Downloaded from Arrow.com.

Value	Description
0	The GCLK_IO will be zero when the generic clock generator is turned off or when the OE bit is zero.
1	The GCLK_IO will be one when the generic clock generator is turned off or when the OE bit is zero.

Bit 17 – IDC Improve Duty Cycle
This bit is used to improve the duty cycle of the generic clock generator when odd division factors are used.

Value	Description
0	The generic clock generator duty cycle is not 50/50 for odd division factors.
1	The generic clock generator duty cycle is 50/50.

Bit 16 – GENEN Generic Clock Generator Enable
This bit is used to enable and disable the generic clock generator.

Value	Description
0	The generic clock generator is disabled.
1	The generic clock generator is enabled.

Bits 12:8 – SRC[4:0] Source Select
These bits define the clock source to be used as the source for the generic clock generator, as shown in the table below.

Value	Name	Description
0x00	XOSC	XOSC oscillator output
0x01	GCLKIN	Generator input pad
0x02	GCLKGEN1	Generic clock generator 1 output
0x03	OSCULP32K	OSCULP32K oscillator output
0x04	OSC32K	OSC32K oscillator output
0x05	XOSC32K	XOSC32K oscillator output
0x06	OSC8M	OSC8M oscillator output
0x07	DFLL48M	DFLL48M output
0x08	FDPLL96M	FDPLL96M output
0x09-0x1F	Reserved	Reserved for future use

Bits 3:0 – ID[3:0] Generic Clock Generator Selection
These bits select the generic clock generator that will be configured or read. The value of the ID bit group versus which generic clock generator is configured is shown in the next table.
A power reset will reset the GENCTRL register for all IDs, including the generic clock generator used by the RTC. If a generic clock generator ID other than generic clock generator 0 is not a source of a “locked” generic clock or a source of the RTC generic clock, a user reset will reset the GENCTRL for this ID.
After a power reset, the reset value of the GENCTRL register is as shown in the next table.

GCLK Generator ID	Reset Value after a Power Reset
0x00	0x00010600
0x01	0x00000001
0x02	0x00010302
0x03	0x00000003
0x04	0x00000004
0x05	0x00000005
0x06	0x00000006
0x07	0x00000007
0x08	0x00000008

After a user reset, the reset value of the GENCTRL register is as shown in the table below.

GCLK Generator ID	Reset Value after a User Reset
0x00	0x00010600

Downloaded from Arrow.com.

.....continued	
GCLK Generator ID	**Reset Value after a User Reset**
0x01	0x00000001 if the generator is not used by the RTC and not a source of a 'locked' generic clock No change if the generator is used by the RTC or used by a GCLK with a WRTLOCK as one
0x02	0x00010302 if the generator is not used by the RTC and not a source of a 'locked' generic clock No change if the generator is used by the RTC or used by a GCLK with a WRTLOCK as one
0x03	0x00000003 if the generator is not used by the RTC and not a source of a 'locked' generic clock No change if the generator is used by the RTC or used by a GCLK with a WRTLOCK as one
0x04	0x00000004 if the generator is not used by the RTC and not a source of a 'locked' generic clock No change if the generator is used by the RTC or used by a GCLK with a WRTLOCK as one
0x05	0x00000005 if the generator is not used by the RTC and not a source of a 'locked' generic clock No change if the generator is used by the RTC or used by a GCLK with a WRTLOCK as one
0x06	0x00000006 if the generator is not used by the RTC and not a source of a 'locked' generic clock No change if the generator is used by the RTC or used by a GCLK with a WRTLOCK as one
0x07	0x00000007 if the generator is not used by the RTC and not a source of a 'locked' generic clock No change if the generator is used by the RTC or used by a GCLK with a WRTLOCK as one
0x08	0x00000008 if the generator is not used by the RTC and not a source of a 'locked' generic clock No change if the generator is used by the RTC or used by a GCLK with a WRTLOCK as one

Value	Name	Description
0x0	GCLKGEN0	Generic clock generator 0
0x1	GCLKGEN1	Generic clock generator 1
0x2	GCLKGEN2	Generic clock generator 2
0x3	GCLKGEN3	Generic clock generator 3
0x4	GCLKGEN4	Generic clock generator 4
0x5	GCLKGEN5	Generic clock generator 5
0x6	GCLKGEN6	Generic clock generator 6
0x7	GCLKGEN7	Generic clock generator 7
0x8	GCLKGEN8	Generic clock generator 8
0x9-0xF	Reserved	

Downloaded from Arrow.com.

15.8.5 Generic Clock Generator Division

Name: GENDIV
Offset: 0x8
Reset: 0x00000000
Property: Write-Synchronized

Bit	31	30	29	28	27	26	25	24
Access								
Reset								

Bit	23	22	21	20	19	18	17	16
	DIV[15:8]							
Access	R/W	R/W	R/W	R/W	R/W	R/W	R/W	R/W
Reset	0	0	0	0	0	0	0	0

Bit	15	14	13	12	11	10	9	8
	DIV[7:0]							
Access	R/W	R/W	R/W	R/W	R/W	R/W	R/W	R/W
Reset	0	0	0	0	0	0	0	0

Bit	7	6	5	4	3	2	1	0
					ID[3:0]			
Access					R/W	R/W	R/W	R/W
Reset					0	0	0	0

Bits 23:8 – DIV[15:0] Division Factor
These bits apply a division on each selected generic clock generator. The number of DIV bits each generator has can be seen in the next table. Writes to bits above the specified number will be ignored.

Generator	Division Factor Bits	Maximum Division Factor
Generic clock generator 0	8 division factor bits - DIV[7:0]	512
Generic clock generator 1	16 division factor bits - DIV[15:0]	131072
Generic clock generators 2	5 division factor bits - DIV[4:0]	64
Generic clock generators 3 - 8	8 division factor bits - DIV[7:0]	512

Bits 3:0 – ID[3:0] Generic Clock Generator Selection
These bits select the generic clock generator on which the division factor will be applied, as shown in the table below.

Values	Description
0x0	Generic clock generator 0
0x1	Generic clock generator 1
0x2	Generic clock generator 2
0x3	Generic clock generator 3
0x4	Generic clock generator 4
0x5	Generic clock generator 5
0x6	Generic clock generator 6
0x7	Generic clock generator 7
0x8	Generic clock generator 8
0x9-0xF	Reserved

A Power Reset will reset the GENDIV register for all IDs, including the generic clock generator used by the RTC. If a generic clock generator ID other than generic clock generator 0 is not a source of a “locked” generic clock or a source of the RTC generic clock, a user Reset will reset the GENDIV register for this ID.
After a Power Reset, the Reset value of the GENDIV register is as shown in the table below.

Downloaded from Arrow.com.

GCLK Generator ID	Reset Value after a Power Reset
0x00	0x00000000
0x01	0x00000001
0x02	0x00000002
0x03	0x00000003
0x04	0x00000004
0x05	0x00000005
0x06	0x00000006
0x07	0x00000007
0x08	0x00000008

After a user Reset, the Reset value of the GENDIV register is as shown in next table.

GCLK Generator ID	Reset Value after a User Reset
0x00	0x00000000
0x01	0x00000001 if the generator is not used by the RTC and not a source of a 'locked' generic clock No change if the generator is used by the RTC or used by a GCLK with a WRTLOCK as one
0x02	0x00000002 if the generator is not used by the RTC and not a source of a 'locked' generic clock No change if the generator is used by the RTC or used by a GCLK with a WRTLOCK as one
0x03	0x00000003 if the generator is not used by the RTC and not a source of a 'locked' generic clock No change if the generator is used by the RTC or used by a GCLK with a WRTLOCK as one
0x04	0x00000004 if the generator is not used by the RTC and not a source of a 'locked' generic clock No change if the generator is used by the RTC or used by a GCLK with a WRTLOCK as one
0x05	0x00000005 if the generator is not used by the RTC and not a source of a 'locked' generic clock No change if the generator is used by the RTC or used by a GCLK with a WRTLOCK as one
0x06	0x00000006 if the generator is not used by the RTC and not a source of a 'locked' generic clock No change if the generator is used by the RTC or used by a GCLK with a WRTLOCK as one
0x07	0x00000007 if the generator is not used by the RTC and not a source of a 'locked' generic clock No change if the generator is used by the RTC or used by a GCLK with a WRTLOCK as one
0x08	0x00000008 if the generator is not used by the RTC and not a source of a 'locked' generic clock No change if the generator is used by the RTC or used by a GCLK with a WRTLOCK as one

© 2021 Microchip Technology Inc. and its subsidiaries

Downloaded from Arrow.com.

16. PM – Power Manager

16.1 Overview

The Power Manager (PM) controls the reset, clock generation and sleep modes of the device.

Utilizing a main clock chosen from a large number of clock sources from the GCLK, the clock controller provides synchronous system clocks to the CPU and the modules connected to the AHB and the APBx bus. The synchronous system clocks are divided into a number of clock domains; one for the CPU and AHB and one for each APBx. Any synchronous system clock can be changed at run-time during normal operation. The clock domains can run at different speeds, enabling the user to save power by running peripherals at a relatively low clock frequency, while maintaining high CPU performance. In addition, the clock can be masked for individual modules, enabling the user to minimize power consumption.

Before entering the Stand-by Sleep mode the user must make sure that a significant amount of clocks and peripherals are disabled, so that the voltage regulator is not overloaded. This is because during Stand-by Sleep mode the internal voltage regulator will be in Low-Power mode.

Various sleep modes are provided in order to fit power consumption requirements. This enables the PM to stop unused modules in order to save power. In active mode, the CPU is executing application code. When the device enters a Sleep mode, program execution is stopped and some modules and clock domains are automatically switched off by the PM according to the Sleep mode. The application code decides which Sleep mode to enter and when. Interrupts from enabled peripherals and all enabled reset sources can restore the device from a Sleep mode to Active mode.

The PM also contains a reset controller to collect all possible reset sources. It issues a device reset and sets the device to its initial state, and allows the reset source to be identified by software.

16.2 Features

- Reset control
  - Reset the microcontroller and set it to an initial state according to the reset source
  - Multiple reset sources
    - Power reset sources: POR, BOD12, BOD33
    - User reset sources: External reset ($\overline{\text{RESET}}$), Watchdog Timer reset, software reset
  - Reset status register for reading the reset source from the application code
- Clock control
  - Controls CPU, AHB and APB system clocks
    - Multiple clock sources and division factor from GCLK
    - Clock prescaler with 1x to 128x division
  - Safe run-time clock switching from GCLK
  - Module-level clock gating through maskable peripheral clocks
- Power management control
  - Sleep modes: IDLE, STANDBY
  - SleepWalking support on GCLK clocks

Downloaded from Arrow.com.

16.3 Block Diagram

Figure 16-1. PM Block Diagram

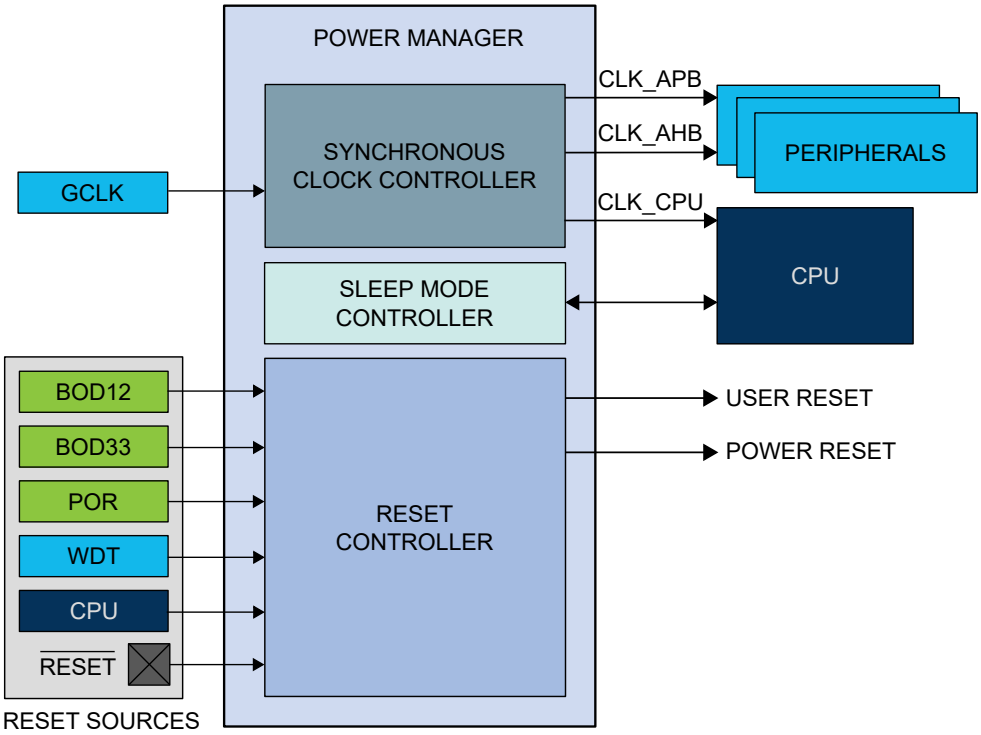

16.4 Signal Description

Signal Name	Type	Description
$\overline{\text{RESET}}$	Digital input	External reset

Refer to *I/O Multiplexing and Considerations* for details on the pin mapping for this peripheral. One signal can be mapped on several pins.

Related Links

7. I/O Multiplexing and Considerations

16.5 Product Dependencies

In order to use this peripheral, other parts of the system must be configured correctly, as described below.

16.5.1 I/O Lines

Not applicable.

16.5.2 Power Management

Not applicable.

Downloaded from Arrow.com.

16.5.3 Clocks

The PM bus clock (CLK_PM_APB) can be enabled and disabled in the Power Manager, and the default state of CLK_PM_APB can be found in *Peripheral Clock Default State* table in the *Peripheral Clock Masking* section. If this clock is disabled in the Power Manager, it can only be re-enabled by a reset.

A generic clock (GCLK_MAIN) is required to generate the main clock. The clock source for GCLK_MAIN is configured by default in the Generic Clock Controller, and can be reconfigured by the user if needed. Refer to *GCLK – Generic Clock Controller* for details.

Related Links

16.6.2.6 Peripheral Clock Masking

15. GCLK - Generic Clock Controller

16.5.3.1 Main Clock

The main clock (CLK_MAIN) is the common source for the synchronous clocks. This is fed into the common 8-bit prescaler that is used to generate synchronous clocks to the CPU, AHB and APBx modules.

16.5.3.2 CPU Clock

The CPU clock (CLK_CPU) is routed to the CPU. Halting the CPU clock inhibits the CPU from executing instructions.

16.5.3.3 AHB Clock

The AHB clock (CLK_AHB) is the root clock source used by peripherals requiring an AHB clock. The AHB clock is always synchronous to the CPU clock and has the same frequency, but may run even when the CPU clock is turned off. A clock gate is inserted from the common AHB clock to any AHB clock of a peripheral.

16.5.3.4 APBx Clocks

The APBx clock (CLK_APBX) is the root clock source used by modules requiring a clock on the APBx bus. The APBx clock is always synchronous to the CPU clock, but can be divided by a prescaler, and will run even when the CPU clock is turned off. A clock gater is inserted from the common APB clock to any APBx clock of a module on APBx bus.

16.5.4 DMA

Not applicable.

16.5.5 Interrupts

The interrupt request line is connected to the Interrupt Controller. Using the PM interrupt requires the Interrupt Controller to be configured first. Refer to *Nested Vector Interrupt Controller* for details.

Related Links

11.2 Nested Vector Interrupt Controller

16.5.6 Events

Not applicable.

16.5.7 Debug Operation

When the CPU is halted in debug mode, the PM continues normal operation. In sleep mode, the clocks generated from the PM are kept running to allow the debugger accessing any modules. As a consequence, power measurements are not possible in debug mode.

16.5.8 Register Access Protection

Registers with write-access can be optionally write-protected by the Peripheral Access Controller (PAC), except for the following:

- Interrupt Flag register (INTFLAG).
- Reset Cause register (RCAUSE).

Note: Optional write-protection is indicated by the "PAC Write-Protection" property in the register description.

Write-protection does not apply for accesses through an external debugger. Refer to *PAC – Peripheral Access Controller* for details.

Downloaded from Arrow.com.

Related Links

11.6 Peripheral Access Controller (PAC)

16.5.9 Analog Connections

Not applicable.

16.6 Functional Description

16.6.1 Principle of Operation

16.6.1.1 Synchronous Clocks

The GCLK_MAIN clock from GCLK module provides the source for the main clock, which is the common root for the synchronous clocks for the CPU and APBx modules. The main clock is divided by an 8-bit prescaler, and each of the derived clocks can run from any tapping off this prescaler or the undivided main clock, as long as $f_{CPU} \geq f_{APBx}$. The synchronous clock source can be changed on the fly to respond to varying load in the application. The clocks for each module in each synchronous clock domain can be individually masked to avoid power consumption in inactive modules. Depending on the sleep mode, some clock domains can be turned off (see Table 16-4).

16.6.1.2 Reset Controller

The Reset Controller collects the various reset sources and generates reset for the device. The device contains a Power-on-Reset (POR) detector, which keeps the system reset until power is stable. This eliminates the need for external reset circuitry to guarantee stable operation when powering up the device.

16.6.1.3 Sleep Mode Controller

In Active mode, all clock domains are active, allowing software execution and peripheral operation. The PM Sleep Mode Controller allows the user to choose between different sleep modes depending on application requirements, to save power (see Table 16-4).

16.6.2 Basic Operation

16.6.2.1 Initialization

After a Power-on Reset (POR), the PM is enabled and the Reset Cause register indicates the POR source (RCAUSE.POR). The default clock source of the GCLK_MAIN clock is started and calibrated before the CPU starts running. The GCLK_MAIN clock is selected as the main clock without any division on the prescaler. The device is in the Active mode.

By default, only the necessary clocks are enabled (see Table 16-1).

16.6.2.2 Enabling, Disabling and Resetting

The PM module is always enabled and can not be reset.

16.6.2.3 Selecting the Main Clock Source

Refer to *GCLK – Generic Clock Controller* for details on how to configure the main clock source.

Related Links

15. GCLK - Generic Clock Controller

16.6.2.4 Selecting the Synchronous Clock Division Ratio

The main clock feeds an 8-bit prescaler, which can be used to generate the synchronous clocks. By default, the synchronous clocks run on the undivided main clock. The user can select a prescaler division for the CPU clock by writing the CPU Prescaler Selection bits in the CPU Select register (CPUSEL.CPUDIV), resulting in a CPU clock frequency determined by this equation:

$$f_{\mathrm{CPU}} = \frac{f_{\mathrm{main}}}{2^{\mathrm{CPUDIV}}}$$

Similarly, the clock for the APBx can be divided by writing their respective registers (APBxSEL.APBxDIV). To ensure correct operation, frequencies must be selected so that $f_{CPU} \geq f_{APBx}$. Also, frequencies must never exceed the specified maximum frequency for each clock domain.

Downloaded from Arrow.com.

Note: The AHB clock is always equal to the CPU clock.

CPUSEL and APBxSEL can be written without halting or disabling peripheral modules. Writing CPUSEL and APBxSEL allows a new clock setting to be written to all synchronous clocks at the same time. It is possible to keep one or more clocks unchanged. This way, it is possible to, for example, scale the CPU speed according to the required performance, while keeping the APBx frequency constant.

Figure 16-2. Synchronous Clock Selection and Prescaler

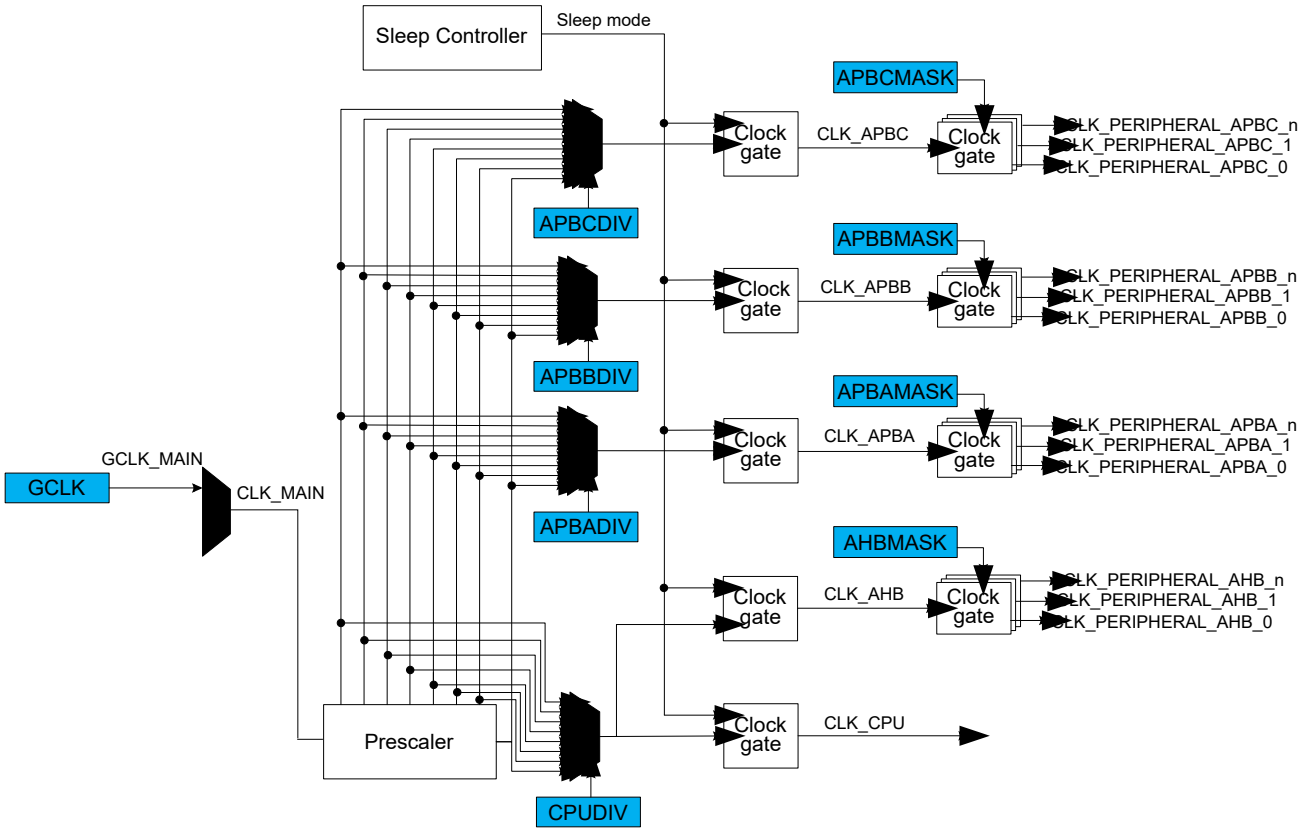

16.6.2.5 Clock Ready Flag

There is a slight delay from when CPUSEL and APBxSEL are written until the new clock setting becomes effective. During this interval, the Clock Ready flag in the Interrupt Flag Status and Clear register (INTFLAG.CKRDY) will read as zero. If CKRDY in the INTENSET register is written to one, the Power Manager interrupt can be triggered when the new clock setting is effective. CPUSEL must not be re-written while CKRDY is zero, or the system may become unstable or hang.

16.6.2.6 Peripheral Clock Masking

It is possible to disable or enable the clock for a peripheral in the AHB or APBx clock domain by writing the corresponding bit in the Clock Mask register (APBxMASK) to zero or one. Refer to the table below for the default state of each of the peripheral clocks.

Table 16-1. Peripheral Clock Default State

Peripheral Clock	Default State
CLK_PAC0_APB	Enabled
CLK_PM_APB	Enabled
CLK_SYSCTRL_APB	Enabled
CLK_GCLK_APB	Enabled
CLK_WDT_APB	Enabled

Downloaded from Arrow.com.

.....continued	
Peripheral Clock	**Default State**
CLK_RTC_APB	Enabled
CLK_EIC_APB	Enabled
CLK_PAC1_APB	Enabled
CLK_DSU_APB	Enabled
CLK_NVMCTRL_APB	Enabled
CLK_PORT_APB	Enabled
CLK_HMATRIX_APB	Enabled
CLK_PAC2_APB	Disabled
CLK_SERCOMx_APB	Disabled
CLK_TCx_APB	Disabled
CLK_ADC_APB	Enabled
CLK_ACx_APB	Disabled
CLK_DAC_APB	Disabled
CLK_PTC_APB	Disabled
CLK_USB_APB	Enabled
CLK_DMAC_APB	Enabled
CLK_TCCx_APB	Disabled
CLK_I2S_APB	Disabled

When the APB clock for a module is not provided its registers cannot be read or written. The module can be re-enabled later by writing the corresponding mask bit to one.

A module may be connected to several clock domains (for instance, AHB and APB), in which case it will have several mask bits.

Note: Clocks should only be switched off if it is certain that the module will not be used. Switching off the clock for the NVM Controller (NVMCTRL) will cause a problem if the CPU needs to read from the flash memory. Switching off the clock to the Power Manager (PM), which contains the mask registers, or the corresponding APBx bridge, will make it impossible to write the mask registers again. In this case, they can only be re-enabled by a system reset.

16.6.2.7 Reset Controller

The latest reset cause is available in RCAUSE, and can be read during the application boot sequence in order to determine proper action.

There are two groups of reset sources:

- Power Reset: Resets caused by an electrical issue.
- User Reset: Resets caused by the application.

The table below lists the parts of the device that are reset, depending on the reset type.

Downloaded from Arrow.com.

Table 16-2. Effects of the Different Reset Events

	Power Reset	User Reset	
	POR, BOD12, BOD33	External Reset	WDT Reset, SysResetReq
RTC All the 32kHz sources WDT with ALWAYSON feature Generic Clock with WRTLOCK feature	Y	N	N
Debug logic	Y	Y	N
Others	Y	Y	Y

The external reset is generated when pulling the $\overline{\text{RESET}}$ pin low. This pin has an internal pull-up, and does not need to be driven externally during normal operation.

The POR, BOD12 and BOD33 reset sources are generated by their corresponding module in the System Controller Interface (SYSCTRL).

The WDT reset is generated by the Watchdog Timer.

The System Reset Request (SysResetReq) is a software reset generated by the CPU when asserting the SYSRESETREQ bit located in the Reset Control register of the CPU (See the ARM® Cortex® Technical Reference Manual on http://www.arm.com).

Figure 16-3. Reset Controller

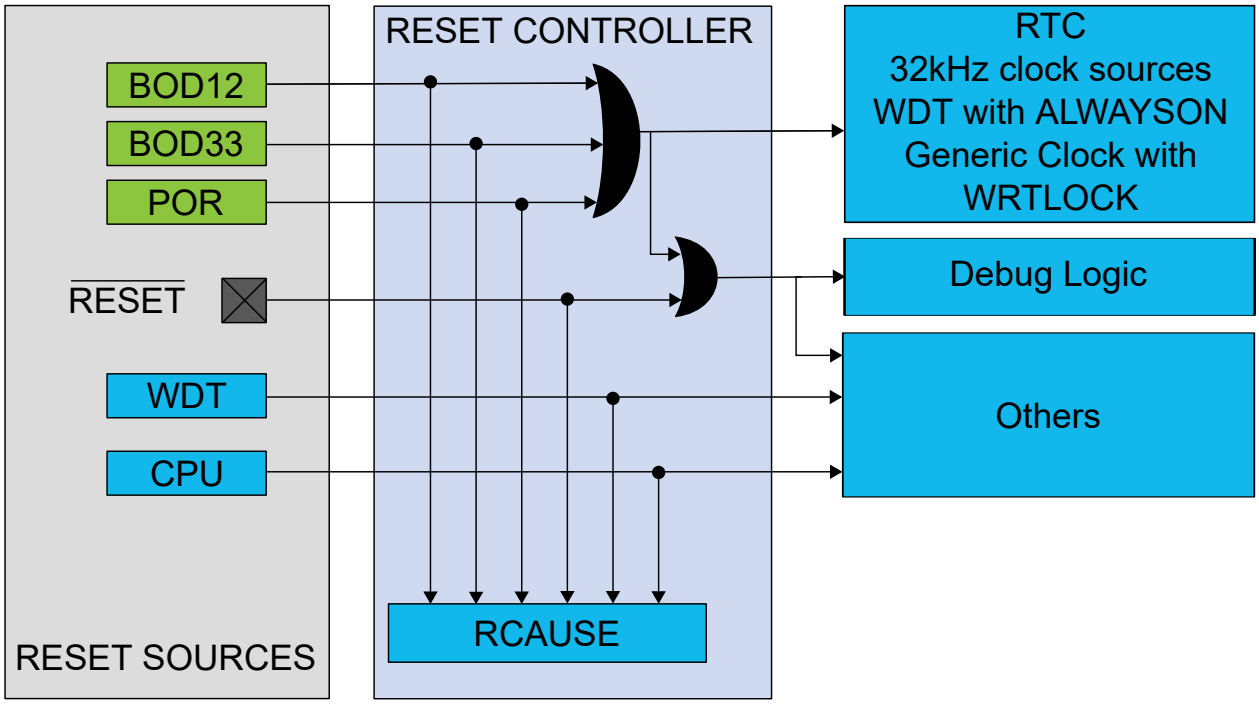

16.6.2.8 Sleep Mode Controller

Sleep mode is activated by the Wait For Interrupt instruction (WFI). The Idle bits in the Sleep Mode register (SLEEP.IDLE) and the SLEEPDEEP bit of the System Control register of the CPU should be used as argument to select the level of the sleep mode.

There are two main types of sleep mode:

- IDLE mode: The CPU is stopped. Optionally, some synchronous clock domains are stopped, depending on the IDLE argument. Regulator operates in normal mode.

Downloaded from Arrow.com.

- STANDBY mode: All clock sources are stopped, except those where the RUNSTDBY bit is set. Regulator operates in low-power mode. Before entering standby mode the user must make sure that a significant amount of clocks and peripherals are disabled, so that the voltage regulator is not overloaded.

Table 16-3. Sleep Mode Entry and Exit Table

Mode	Level	Mode Entry	Wake-Up Sources
IDLE	0	SCR.SLEEPDEEP = 0 SLEEP.IDLE=Level WFI	Synchronous(2) (APB, AHB), asynchronous(1)
	1		Synchronous (APB), asynchronous
	2		Asynchronous
STANDBY		SCR.SLEEPDEEP = 1 WFI	Asynchronous

Notes:
1. Asynchronous: interrupt generated on generic clock or external clock or external event.
2. Synchronous: interrupt generated on the APB clock.

Table 16-4. Sleep Mode Overview

Sleep Mode	CPU Clock	AHB Clock	APB Clock	Oscillators				Main Clock	Regulator Mode	RAM Mode
				ONDEMAND = 0		ONDEMAND = 1				
				RUNSTDBY=0	RUNSTDBY=1	RUNSTDBY=0	RUNSTDBY=1			
Idle 0	Stop	Run	Run	Run	Run	Run if requested	Run if requested	Run	Normal	Normal
Idle 1	Stop	Stop	Run	Run	Run	Run if requested	Run if requested	Run	Normal	Normal
Idle 2	Stop	Stop	Stop	Run	Run	Run if requested	Run if requested	Run	Normal	Normal
Standby	Stop	Stop	Stop	Stop	Run	Stop	Run if requested	Stop	Low power	Low power

16.6.2.8.1 IDLE Mode

The IDLE modes allow power optimization with the fastest wake-up time.

The CPU is stopped. To further reduce power consumption, the user can disable the clocking of modules and clock sources by configuring the SLEEP.IDLE bit group. The module will be halted regardless of the bit settings of the mask registers in the Power Manager (PM.AHBMASK, PM.APBxMASK).

Regulator operates in normal mode.

- Entering IDLE mode: The IDLE mode is entered by executing the WFI instruction. Additionally, if the SLEEPONEXIT bit in the ARM Cortex System Control register (SCR) is set, the IDLE mode will also be entered when the CPU exits the lowest priority ISR. This mechanism can be useful for applications that only require the processor to run when an interrupt occurs. Before entering the IDLE mode, the user must configure the IDLE mode configuration bit group and must write a zero to the SCR.SLEEPDEEP bit.
- Exiting IDLE mode: The processor wakes the system up when it detects the occurrence of any interrupt that is not masked in the NVIC Controller with sufficient priority to cause exception entry. The system goes back to the ACTIVE mode. The CPU and affected modules are restarted.

16.6.2.8.2 STANDBY Mode

The STANDBY mode allows achieving very low-power consumption.

In this mode, all clocks are stopped except those which are kept running if requested by a running module or have the ONDEMAND bit set to zero. For example, the RTC can operate in STANDBY mode. In this case, its generic clock clock source will also be enabled.

The regulator and the RAM operate in Low-Power mode and the RAM content is retained.

A SLEEPONEXIT feature is also available.

- Entering STANDBY mode: This mode is entered by executing the `WFI` instruction with the SCR.SLEEPDEEP bit of the CPU is written to 1.

Downloaded from Arrow.com.

- Exiting STANDBY mode: Any peripheral able to generate an asynchronous interrupt can wake-up the system. For example, a module running on a generic clock can trigger an interrupt. When the enabled asynchronous wake-up event occurs and the system is woken up, the device will either execute the Interrupt Service Routine or continue the normal program execution according to the Priority Mask Register (PRIMASK) configuration of the CPU.

16.6.3 SleepWalking

SleepWalking is the capability for a device to temporarily wake-up clocks for the peripheral to perform a task without waking-up the CPU in STANDBY sleep mode. At the end of the sleepwalking task, the device can either be awakened by an interrupt (from a peripheral involved in SleepWalking) or enter into STANDBY sleep mode again.

In this device, SleepWalking is supported only on GCLK clocks by using the on-demand clock principle of the clock sources. Refer to *On-demand, Clock Requests* for more details.

Related Links

14.6 On-demand, Clock Requests

16.6.4 DMA Operation

Not applicable.

16.6.5 Interrupts

The peripheral has the following interrupt sources:

- Clock Ready flag

Each interrupt source has an interrupt flag associated with it. The interrupt flag in the Interrupt Flag Status and Clear (INTFLAG) register is set when the interrupt condition occurs. Each interrupt can be individually enabled by writing a one to the corresponding bit in the Interrupt Enable Set (INTENSET) register, and disabled by writing a one to the corresponding bit in the Interrupt Enable Clear (INTENCLR) register. An interrupt request is generated when the interrupt flag is set and the corresponding interrupt is enabled. The interrupt request remains active until the interrupt flag is cleared, the interrupt is disabled or the peripheral is reset. An interrupt flag is cleared by writing a one to the corresponding bit in the INTFLAG register. Each peripheral can have one interrupt request line per interrupt source or one common interrupt request line for all the interrupt sources. Refer to *Nested Vector Interrupt Controller* for details. If the peripheral has one common interrupt request line for all the interrupt sources, the user must read the INTFLAG register to determine which interrupt condition is present.

Related Links

11.2 Nested Vector Interrupt Controller

16.6.6 Events

Not applicable.

16.6.7 Sleep Mode Operation

In all IDLE sleep modes, the power manager is still running on the selected main clock.

In STANDDBY sleep mode, the power manager is frozen and is able to go back to ACTIVE mode upon any asynchronous interrupt.

Downloaded from Arrow.com.

16.7 Register Summary

Offset	Name	Bit Pos.	7	6	5	4	3	2	1	0
0x00	CTRL	7:0								
0x01	SLEEP	7:0							IDLE[1:0]	
0x02 ... 0x07	Reserved									
0x08	CPUSEL	7:0						CPUDIV[2:0]		
0x09	APBASEL	7:0						APBADIV[2:0]		
0x0A	APBBSEL	7:0						APBBDIV[2:0]		
0x0B	APBCSEL	7:0						APBCDIV[2:0]		
0x0C ... 0x13	Reserved									
0x14	AHBMASK	7:0		USB	DMAC	NVMCTRL	DSU	HPB2	HPB1	HPB0
		15:8								
		23:16								
		31:24								
0x18	APBAMASK	7:0		EIC	RTC	WDT	GCLK	SYSCTRL	PM	PAC0
		15:8								
		23:16								
		31:24								
0x1C	APBBMASK	7:0			USB	DMAC	PORT	NVMCTRL	DSU	PAC1
		15:8								
		23:16								
		31:24								
0x20	APBCMASK	7:0	SERCOM5	SERCOM4	SERCOM3	SERCOM2	SERCOM1	SERCOM0	EVSYS	PAC2
		15:8	TC7	TC6	TC5	TC4	TC3	TCC2	TCC1	TCC0
		23:16			AC1	I2S	PTC	DAC	AC	ADC
		31:24								TCC3
0x24 ... 0x33	Reserved									
0x34	INTENCLR	7:0								CKRDY
0x35	INTENSET	7:0								CKRDY
0x36	INTFLAG	7:0								CKRDY
0x37	Reserved									
0x38	RCAUSE	7:0		SYST	WDT	EXT		BOD33	BOD12	POR

16.8 Register Description

Registers can be 8, 16, or 32 bits wide. Atomic 8-, 16-, and 32-bit accesses are supported. In addition, the 8-bit quarters and 16-bit halves of a 32-bit register, and the 8-bit halves of a 16-bit register can be accessed directly.

Exception for APBASEL, APBBSEL and APBCSEL: These registers must only be accessed with 8-bit access.

Optional write-protection by the Peripheral Access Controller (PAC) is denoted by the "PAC Write-Protection" property in each individual register description.

Downloaded from Arrow.com.

16.8.1 Control

Name: CTRL
Offset: 0x00
Reset: 0x00
Property: Write-Protected

Bit	7	6	5	4	3	2	1	0
Access								
Reset								

Downloaded from Arrow.com.

16.8.2 Sleep Mode

Name: SLEEP
Offset: 0x01
Reset: 0x00
Property: Write-Protected

Bit	7	6	5	4	3	2	1	0
							IDLE[1:0]	
Access							R/W	R/W
Reset							0	0

Bits 1:0 – IDLE[1:0] Idle Mode Configuration
These bits select the Idle mode configuration after a WFI instruction.

IDLE[1:0]	Name	Description
0x0	CPU	The CPU clock domain is stopped
0x1	AHB	The CPU and AHB clock domains are stopped
0x2	APB	The CPU, AHB and APB clock domains are stopped
0x3		Reserved

Downloaded from Arrow.com.

16.8.3 CPU Clock Select

Name: CPUSEL
Offset: 0x08
Reset: 0x00
Property: Write-Protected

Bit	7	6	5	4	3	2	1	0
						CPUDIV[2:0]		
Access						R/W	R/W	R/W
Reset						0	0	0

Bits 2:0 – CPUDIV[2:0] CPU Prescaler Selection
These bits define the division ratio of the main clock prescaler (2^n).

CPUDIV[2:0]	Name	Description
0x0	DIV1	Divide by 1
0x1	DIV2	Divide by 2
0x2	DIV4	Divide by 4
0x3	DIV8	Divide by 8
0x4	DIV16	Divide by 16
0x5	DIV32	Divide by 32
0x6	DIV64	Divide by 64
0x7	DIV128	Divide by 128

Downloaded from Arrow.com.

16.8.4 APBA Clock Select

Name: APBASEL
Offset: 0x09
Reset: 0x00
Property: Write-Protected

Bit	7	6	5	4	3	2	1	0
						APBADIV[2:0]		
Access						R/W	R/W	R/W
Reset						0	0	0

Bits 2:0 – APBADIV[2:0] APBA Prescaler Selection
These bits define the division ratio of the APBA clock prescaler (2^n).

APBADIV[2:0]	Name	Description
0x0	DIV1	Divide by 1
0x1	DIV2	Divide by 2
0x2	DIV4	Divide by 4
0x3	DIV8	Divide by 8
0x4	DIV16	Divide by 16
0x5	DIV32	Divide by 32
0x6	DIV64	Divide by 64
0x7	DIV128	Divide by 128

Downloaded from Arrow.com.

16.8.5 APBB Clock Select

Name: APBBSEL
Offset: 0x0A
Reset: 0x00
Property: Write-Protected

Bit	7	6	5	4	3	2	1	0
						APBBDIV[2:0]		
Access						R/W	R/W	R/W
Reset						0	0	0

Bits 2:0 – APBBDIV[2:0] APBB Prescaler Selection
These bits define the division ratio of the APBB clock prescaler (2^n).

APBBDIV[2:0]	Name	Description
0x0	DIV1	Divide by 1
0x1	DIV2	Divide by 2
0x2	DIV4	Divide by 4
0x3	DIV8	Divide by 8
0x4	DIV16	Divide by 16
0x5	DIV32	Divide by 32
0x6	DIV64	Divide by 64
0x7	DIV128	Divide by 128

Downloaded from Arrow.com.

16.8.6 APBC Clock Select

Name: APBCSEL
Offset: 0x0B
Reset: 0x00
Property: Write-Protected

Bit	7	6	5	4	3	2	1	0
						APBCDIV[2:0]		
Access						R/W	R/W	R/W
Reset						0	0	0

Bits 2:0 – APBCDIV[2:0] APBC Prescaler Selection
These bits define the division ratio of the APBC clock prescaler (2^n).

APBCDIV[2:0]	Name	Description
0x0	DIV1	Divide by 1
0x1	DIV2	Divide by 2
0x2	DIV4	Divide by 4
0x3	DIV8	Divide by 8
0x4	DIV16	Divide by 16
0x5	DIV32	Divide by 32
0x6	DIV64	Divide by 64
0x7	DIV128	Divide by 128

© 2021 Microchip Technology Inc. and its subsidiaries

Downloaded from Arrow.com.

16.8.7 AHB Mask

Name: AHBMASK
Offset: 0x14
Reset: 0x0000007F
Property: Write-Protected

Bit	31	30	29	28	27	26	25	24
Access								
Reset								

Bit	23	22	21	20	19	18	17	16
Access								
Reset								

Bit	15	14	13	12	11	10	9	8
Access								
Reset								

Bit	7	6	5	4	3	2	1	0
		USB	DMAC	NVMCTRL	DSU	HPB2	HPB1	HPB0
Access		R/W	R/W	R/W	R/W	R/W	R/W	R/W
Reset		1	1	1	1	1	1	1

Bit 6 – USB USB AHB Clock Mask

Value	Description
0	The AHB clock for the USB is stopped.
1	The AHB clock for the USB is enabled.

Bit 5 – DMAC DMAC AHB Clock Mask

Value	Description
0	The AHB clock for the DMAC is stopped.
1	The AHB clock for the DMAC is enabled.

Bit 4 – NVMCTRL NVMCTRL AHB Clock Mask

Value	Description
0	The AHB clock for the NVMCTRL is stopped.
1	The AHB clock for the NVMCTRL is enabled.

Bit 3 – DSU DSU AHB Clock Mask

Value	Description
0	The AHB clock for the DSU is stopped.
1	The AHB clock for the DSU is enabled.

Bit 2 – HPB2 HPB2 AHB Clock Mask

Value	Description
0	The AHB clock for the HPB2 is stopped.
1	The AHB clock for the HPB2 is enabled.

Bit 1 – HPB1 HPB1 AHB Clock Mask

Value	Description
0	The AHB clock for the HPB1 is stopped.
1	The AHB clock for the HPB1 is enabled.

Downloaded from Arrow.com.

Bit 0 – HPB0 HPB0 AHB Clock Mask

Value	Description
0	The AHB clock for the HPB0 is stopped.
1	The AHB clock for the HPB0 is enabled.

Downloaded from Arrow.com.

16.8.8 APBA Mask

Name: APBAMASK
Offset: 0x18
Reset: 0x0000007F
Property: Write-Protected

Bit	31	30	29	28	27	26	25	24
Access								
Reset								

Bit	23	22	21	20	19	18	17	16
Access								
Reset								

Bit	15	14	13	12	11	10	9	8
Access								
Reset								

Bit	7	6	5	4	3	2	1	0
		EIC	RTC	WDT	GCLK	SYSCTRL	PM	PAC0
Access		R/W	R/W	R/W	R/W	R/W	R/W	R/W
Reset		1	1	1	1	1	1	1

Bit 6 – EIC EIC APB Clock Enable

Value	Description
0	The APBA clock for the EIC is stopped.
1	The APBA clock for the EIC is enabled.

Bit 5 – RTC RTC APB Clock Enable

Value	Description
0	The APBA clock for the RTC is stopped.
1	The APBA clock for the RTC is enabled.

Bit 4 – WDT WDT APB Clock Enable

Value	Description
0	The APBA clock for the WDT is stopped.
1	The APBA clock for the WDT is enabled.

Bit 3 – GCLK GCLK APB Clock Enable

Value	Description
0	The APBA clock for the GCLK is stopped.
1	The APBA clock for the GCLK is enabled.

Bit 2 – SYSCTRL SYSCTRL APB Clock Enable

Value	Description
0	The APBA clock for the SYSCTRL is stopped.
1	The APBA clock for the SYSCTRL is enabled.

Bit 1 – PM PM APB Clock Enable

Value	Description
0	The APBA clock for the PM is stopped.
1	The APBA clock for the PM is enabled.

Downloaded from Arrow.com.

Bit 0 – PAC0 PAC0 APB Clock Enable

Value	Description
0	The APBA clock for the PAC0 is stopped.
1	The APBA clock for the PAC0 is enabled.

Downloaded from Arrow.com.

16.8.9 APBB Mask

Name: APBBMASK
Offset: 0x1C
Reset: 0x0000007F
Property: Write-Protected

Bit	31	30	29	28	27	26	25	24
Access								
Reset								

Bit	23	22	21	20	19	18	17	16
Access								
Reset								

Bit	15	14	13	12	11	10	9	8
Access								
Reset								

Bit	7	6	5	4	3	2	1	0
			USB	DMAC	PORT	NVMCTRL	DSU	PAC1
Access			R/W	R/W	R/W	R/W	R/W	R/W
Reset			1	1	1	1	1	1

Bit 5 – USB USB APB Clock Enable

Value	Description
0	The APBB clock for the USB is stopped.
1	The APBB clock for the USB is enabled.

Bit 4 – DMAC DMAC APB Clock Enable

Value	Description
0	The APBB clock for the DMAC is stopped.
1	The APBB clock for the DMAC is enabled.

Bit 3 – PORT PORT APB Clock Enable

Value	Description
0	The APBB clock for the PORT is stopped.
1	The APBB clock for the PORT is enabled.

Bit 2 – NVMCTRL NVMCTRL APB Clock Enable

Value	Description
0	The APBB clock for the NVMCTRL is stopped.
1	The APBB clock for the NVMCTRL is enabled.

Bit 1 – DSU DSU APB Clock Enable

Value	Description
0	The APBB clock for the DSU is stopped.
1	The APBB clock for the DSU is enabled.

Bit 0 – PAC1 PAC1 APB Clock Enable

Value	Description
0	The APBB clock for the PAC1 is stopped.
1	The APBB clock for the PAC1 is enabled.

Downloaded from Arrow.com.

16.8.10 APBC Mask

Name: APBCMASK
Offset: 0x20
Reset: 0x00010000
Property: Write-Protected

Bit	31	30	29	28	27	26	25	24
								TCC3
Access	R	R	R	R	R	R	R	R/W
Reset	0	0	0	0	0	0	0	0

Bit	23	22	21	20	19	18	17	16
			AC1	I2S	PTC	DAC	AC	ADC
Access	R	R	R/W	R/W	R/W	R/W	R/W	R/W
Reset	0	0	0	0	0	0	0	1

Bit	15	14	13	12	11	10	9	8
	TC7	TC6	TC5	TC4	TC3	TCC2	TCC1	TCC0
Access	R/W	R/W	R/W	R/W	R/W	R/W	R/W	R/W
Reset	0	0	0	0	0	0	0	0

Bit	7	6	5	4	3	2	1	0
	SERCOM5	SERCOM4	SERCOM3	SERCOM2	SERCOM1	SERCOM0	EVSYS	PAC2
Access	R/W	R/W	R/W	R/W	R/W	R/W	R/W	R/W
Reset	0	0	0	0	0	0	0	0

Bit 24 – TCC3 TCC3 APB Clock Enable

Value	Description
0	The APBC clock for the TCC3 is stopped
1	The APBC clock for the TCC3 is enabled

Bit 21 – AC1 AC1 APB Clock Enable

Value	Description
0	The APBC clock for the AC1 is stopped
1	The APBC clock for the AC1 is enabled

Bit 20 – I2S I2S APB Clock Enable

Value	Description
0	The APBC clock for the I2S is stopped
1	The APBC clock for the I2S is enabled

Bit 19 – PTC PTC APB Clock Enable

Value	Description
0	The APBC clock for the PTC is stopped
1	The APBC clock for the PTC is enabled

Bit 18 – DAC DAC APB Clock Enable

Value	Description
0	The APBC clock for the DAC is stopped
1	The APBC clock for the DAC is enabled

Bit 17 – AC AC APB Clock Enable

Value	Description
0	The APBC clock for the AC is stopped

Downloaded from Arrow.com.

Value	Description
1	The APBC clock for the AC is enabled

Bit 16 – ADC ADC APB Clock Enable

Value	Description
0	The APBC clock for the ADC is stopped
1	The APBC clock for the ADC is enabled

Bit 15 – TC7 TC7 APB Clock Enable

Value	Description
0	The APBC clock for the TC7 is stopped
1	The APBC clock for the TC7 is enabled

Bit 14 – TC6 TC6 APB Clock Enable

Value	Description
0	The APBC clock for the TC6 is stopped
1	The APBC clock for the TC6 is enabled

Bit 13 – TC5 TC5 APB Clock Enable

Value	Description
0	The APBC clock for the TC5 is stopped
1	The APBC clock for the TC5 is enabled

Bit 12 – TC4 TC4 APB Clock Enable

Value	Description
0	The APBC clock for the TC4 is stopped
1	The APBC clock for the TC4 is enabled

Bit 11 – TC3 TC3 APB Clock Enable

Value	Description
0	The APBC clock for the TC3 is stopped
1	The APBC clock for the TC3 is enabled

Bit 10 – TCC2 TCC2 APB Clock Enable

Value	Description
0	The APBC clock for the TCC2 is stopped
1	The APBC clock for the TCC2 is enabled

Bit 9 – TCC1 TCC1 APB Clock Enable

Value	Description
0	The APBC clock for the TCC1 is stopped
1	The APBC clock for the TCC1 is enabled

Bit 8 – TCC0 TCC0 APB Clock Enable

Value	Description
0	The APBC clock for the TCC0 is stopped
1	The APBC clock for the TCC0 is enabled

Bit 7 – SERCOM5 SERCOM5 APB Clock Enable

Value	Description
0	The APBC clock for the SERCOM5 is stopped
1	The APBC clock for the SERCOM5 is enabled

Bit 6 – SERCOM4 SERCOM4 APB Clock Enable

Value	Description
0	The APBC clock for the SERCOM4 is stopped

Downloaded from Arrow.com.

Value	Description
1	The APBC clock for the SERCOM4 is enabled

Bit 5 – SERCOM3 SERCOM3 APB Clock Enable

Value	Description
0	The APBC clock for the SERCOM3 is stopped
1	The APBC clock for the SERCOM3 is enabled

Bit 4 – SERCOM2 SERCOM2 APB Clock Enable

Value	Description
0	The APBC clock for the SERCOM2 is stopped
1	The APBC clock for the SERCOM2 is enabled

Bit 3 – SERCOM1 SERCOM1 APB Clock Enable

Value	Description
0	The APBC clock for the SERCOM1 is stopped
1	The APBC clock for the SERCOM1 is enabled

Bit 2 – SERCOM0 SERCOM0 APB Clock Enable

Value	Description
0	The APBC clock for the SERCOM0 is stopped
1	The APBC clock for the SERCOM0 is enabled

Bit 1 – EVSYS EVSYS APB Clock Enable

Value	Description
0	The APBC clock for the EVSYS is stopped
1	The APBC clock for the EVSYS is enabled

Bit 0 – PAC2 PAC2 APB Clock Enable

Value	Description
0	The APBC clock for the PAC2 is stopped
1	The APBC clock for the PAC2 is enabled

Downloaded from Arrow.com.

16.8.11 Interrupt Enable Clear

Name: INTENCLR
Offset: 0x34
Reset: 0x00
Property: Write-Protected

Bit	7	6	5	4	3	2	1	0
								CKRDY
Access								R/W
Reset								0

Bit 0 – CKRDY Clock Ready Interrupt Enable
Writing a zero to this bit has no effect.
Writing a one to this bit will clear the Clock Ready Interrupt Enable bit and the corresponding interrupt request.

Value	Description
0	The Clock Ready interrupt is disabled.
1	The Clock Ready interrupt is enabled and will generate an interrupt request when the Clock Ready Interrupt flag is set.

Downloaded from Arrow.com.

16.8.12 Interrupt Enable Set

Name: INTENSET
Offset: 0x35
Reset: 0x00
Property: Write-Protected

Bit	7	6	5	4	3	2	1	0
								CKRDY
Access								R/W
Reset								0

Bit 0 – CKRDY Clock Ready Interrupt Enable
Writing a zero to this bit has no effect.
Writing a one to this bit will set the Clock Ready Interrupt Enable bit and enable the Clock Ready interrupt.

Value	Description
0	The Clock Ready interrupt is disabled.
1	The Clock Ready interrupt is enabled.

Downloaded from Arrow.com.

16.8.13 Interrupt Flag Status and Clear

Name: INTFLAG
Offset: 0x36
Reset: 0x00
Property: -

Bit	7	6	5	4	3	2	1	0
								CKRDY
Access								R/W
Reset								0

Bit 0 – CKRDY Clock Ready
This flag is cleared by writing a one to the flag.
This flag is set when the synchronous CPU and APBx clocks have frequencies as indicated in the CPUSEL and APBxSEL registers, and will generate an interrupt if INTENCLR/SET.CKRDY is one.
Writing a zero to this bit has no effect.
Writing a one to this bit clears the Clock Ready Interrupt flag.

Downloaded from Arrow.com.

16.8.14 Reset Cause

Name: RCAUSE
Offset: 0x38
Reset: 0x01
Property: -

Bit	7	6	5	4	3	2	1	0
		SYST	WDT	EXT		BOD33	BOD12	POR
Access		R	R	R		R	R	R
Reset		0	0	0		0	0	1

Bit 6 – SYST System Reset Request
This bit is set if a system reset request has been performed. Refer to the Cortex processor documentation for more details.

Bit 5 – WDT Watchdog Reset
This flag is set if a Watchdog Timer reset occurs.

Bit 4 – EXT External Reset
This flag is set if an external reset occurs.

Bit 2 – BOD33 Brown Out 33 Detector Reset
This flag is set if a BOD33 reset occurs.

Bit 1 – BOD12 Brown Out 12 Detector Reset
This flag is set if a BOD12 reset occurs.

Bit 0 – POR Power On Reset
This flag is set if a POR occurs.

Downloaded from Arrow.com.

17. SYSCTRL – System Controller

17.1 Overview

The System Controller (SYSCTRL) provides a user interface to the clock sources, brown out detectors, on-chip voltage regulator and voltage reference of the device.

Through the interface registers, it is possible to enable, disable, calibrate and monitor the SYSCTRL sub-peripherals.

All sub-peripheral statuses are collected in the Power and Clocks Status register (PCLKSR). They can additionally trigger interrupts upon status changes through the INTENSET (INTENSET), INTENCLR (INTENCLR) and INTFLAG (INTFLAG) registers.

Additionally, BOD33 interrupts can be used to wake up the device from Stand-by mode upon a programmed brown-out detection.

17.2 Features

- 0.4-32 MHz Crystal Oscillator (XOSC)
  - Tunable gain control
  - Programmable start-up time
  - Crystal or external input clock on XIN I/O
- 32.768 kHz Crystal Oscillator (XOSC32K)
  - Automatic or manual gain control
  - Programmable start-up time
  - Crystal or external input clock on XIN32 I/O
- 32.768 kHz High Accuracy Internal Oscillator (OSC32K)
  - Frequency fine tuning
  - Programmable start-up time
- 32.768 kHz Ultra Low-Power Internal Oscillator (OSCULP32K)
  - Ultra low-power, always-on oscillator
  - Frequency fine tuning
  - Calibration value loaded from Flash Factory Calibration at Reset
- 8 MHz Internal Oscillator (OSC8M)
  - Fast start-up
  - Output frequency fine tuning
  - 4/2/1 MHz divided output frequencies available
  - Calibration value loaded from Flash Factory Calibration at Reset
- Digital Frequency Locked Loop (DFLL48M)
  - Internal oscillator with no external components
  - 48 MHz output frequency
  - Operates standalone as a high-frequency programmable oscillator in Open-Loop mode
  - Operates as an accurate frequency multiplier against a known frequency in Closed-Loop mode
- Fractional Digital Phase-Locked Loop (FDPLL96M)
  - 48 MHz to 96 MHz output clock frequency
  - 32 kHz to 2 MHz input reference clock frequency range
  - Three possible sources for the reference clock
  - Adjustable proportional integral controller
  - Fractional part used to achieve 1/16th of reference clock step
- 3.3V Brown-Out Detector (BOD33)
  - Programmable threshold

© 2021 Microchip Technology Inc. and its subsidiaries

Downloaded from Arrow.com.

  - Low-power sampling mode of operation
  - Threshold value loaded from Flash User Calibration at start-up
  - Triggers Resets or interrupts
  - Hysteresis
- Internal Voltage Regulator system (VREG)
  - Operating modes:
    - Normal mode
    - Low-power mode
  - With an internal non-configurable Brown-out Detector (BOD12)
- Voltage Reference System (VREF)
  - Bandgap voltage generator with programmable calibration value
  - Temperature sensor
  - Bandgap calibration value loaded from Flash Factory Calibration at start-up

17.3 Block Diagram

Figure 17-1. SYSCTRL Block Diagram

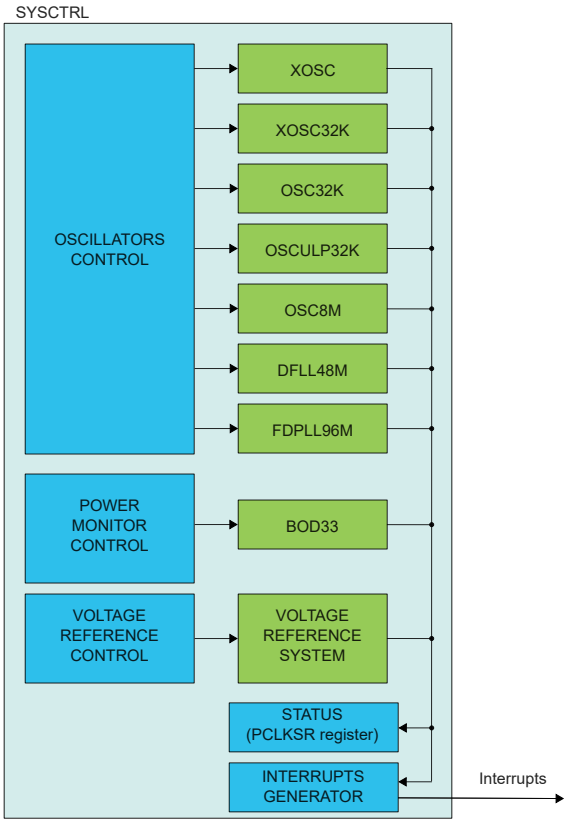

17.4 Signal Description

Signal Name	Types	Description
XIN	Analog Input	Multipurpose Crystal Oscillator or external clock generator input
XOUT	Analog Output	External Multipurpose Crystal Oscillator output

Downloaded from Arrow.com.

.....continued		
Signal Name	**Types**	**Description**
XIN32	Analog Input	32kHz Crystal Oscillator or external clock generator input
XOUT32	Analog Output	32kHz Crystal Oscillator output

The I/O lines are automatically selected when XOSC or XOSC32K are enabled. Refer to *Oscillator Pinout*.

Related Links

7. I/O Multiplexing and Considerations

17.5 Product Dependencies

In order to use this peripheral, other parts of the system must be configured correctly, as described below.

17.5.1 I/O Lines

I/O lines are configured by SYSCTRL when either XOSC or XOSC32K are enabled, and need no user configuration.

17.5.2 Power Management

The SYSCTRL can continue to operate in any sleep mode where the selected source clock is running. The SYSCTRL interrupts can be used to wake up the device from sleep modes. The events can trigger other operations in the system without exiting sleep modes. Refer to *PM – Power Manager* on the different sleep modes.

Related Links

16. PM – Power Manager

17.5.3 Clocks

The SYSCTRL gathers controls for all device oscillators and provides clock sources to the Generic Clock Controller (GCLK). The available clock sources are: XOSC, XOSC32K, OSC32K, OSCULP32K, OSC8M, DFLL48M and FDPLL96M.

The SYSCTRL bus clock (CLK_SYSCTRL_APB) can be enabled and disabled in the Power Manager, and the default state of CLK_SYSCTRL_APB can be found in the Peripheral Clock Masking section in the PM – Power Manager.

The clock used by BOD33 in Sampled mode is asynchronous to the user interface clock (CLK_SYSCTRL_APB). Likewise, the DFLL48M control logic uses the DFLL oscillator output, which is also asynchronous to the user interface clock (CLK_SYSCTRL_APB). Due to this asynchronicity, writes to certain registers will require synchronization between the clock domains. Refer to 17.6.14 Synchronization for further details.

Related Links

16.6.2.6 Peripheral Clock Masking

17.5.4 Interrupts

The interrupt request line is connected to the Interrupt Controller. Using the SYSCTRL interrupts requires the Interrupt Controller to be configured first. Refer to *Nested Vector Interrupt Controller* for details.

Related Links

11.2 Nested Vector Interrupt Controller

17.5.5 Debug Operation

When the CPU is halted in debug mode, the SYSCTRL continues normal operation. If the SYSCTRL is configured in a way that requires it to be periodically serviced by the CPU through interrupts or similar, improper operation or data loss may result during debugging.

If debugger cold-plugging is detected by the system, BOD33 reset will be masked. The BOD resets keep running under hot-plugging. This allows to correct a BOD33 user level too high for the available supply.

Downloaded from Arrow.com.

17.5.6 Register Access Protection

Registers with write-access can be optionally write-protected by the Peripheral Access Controller (PAC), except for the following:

- Interrupt Flag Status and Clear register (INTFLAG)

Note: Optional write-protection is indicated by the "PAC Write-Protection" property in the register description.

Write-protection does not apply for accesses through an external debugger.

17.5.7 Analog Connections

When used, the 32.768kHz crystal must be connected between the XIN32 and XOUT32 pins, and the 0.4-32MHz crystal must be connected between the XIN and XOUT pins, along with any required load capacitors. For details on recommended oscillator characteristics and capacitor load, refer to the *Electrical Characteristics* for details.

Related Links

37. Electrical Characteristics at 85°C

17.6 Functional Description

17.6.1 Principle of Operation

XOSC, XOSC32K, OSC32K, OSCULP32K, OSC8M, DFLL48M, FDPLL96M, BOD33, and VREF are configured through SYSCTRL control registers. Through this interface, the sub-peripherals are enabled, disabled or have their calibration values updated.

The Power and Clocks Status register gathers different status signals coming from the sub-peripherals controlled by the SYSCTRL. The status signals can be used to generate system interrupts, and in some cases wake up the system from Standby mode, provided the corresponding interrupt is enabled.

The oscillator must be enabled to run. The oscillator is enabled by writing a one to the ENABLE bit in the respective oscillator control register, and disabled by writing a zero to the oscillator control register. In Idle mode, the default operation of the oscillator is to run only when requested by a peripheral. In Standby mode, the default operation of the oscillator is to stop. This behavior can be changed by the user, see below for details.

The behavior of the oscillators in the different sleep modes is shown in the table below.

Table 17-1. Behavior of the Oscillators

Oscillator	Idle 0, 1, 2	Standby
XOSC	Run on request	Stop
XOSC32K	Run on request	Stop
OSC32K	Run on request	Stop
OSCULP32K	Run	Run
OSC8M	Run on request	Stop
DFLL48M	Run on request	Stop
FDPLL96M	Run on request	Stop

To force an oscillator to always run in Idle mode, and not only when requested by a peripheral, the oscillator ONDEMAND bit must be written to zero. The default value of this bit is one, and thus the default operation in Idle mode is to run only when requested by a peripheral.

To force the oscillator to run in Standby mode, the RUNSTDBY bit must be written to one. The oscillator will then run in Standby mode when requested by a peripheral (ONDEMAND is one). To force an oscillator to always run in Standby mode, and not only when requested by a peripheral, the ONDEMAND bit must be written to zero and RUNSTDBY must be written to one.

Downloaded from Arrow.com.

The next table shows the behavior in the different sleep modes, depending on the settings of ONDEMAND and RUNSTDBY.

Table 17-2. Behavior in the different sleep modes

Sleep mode	ONDEMAND	RUNSTDBY	Behavior
Idle 0, 1, 2	0	X	Run
Idle 0, 1, 2	1	X	Run when requested by a peripheral
Standby	0	0	Stop
Standby	0	1	Run
Standby	1	0	Stop
Standby	1	1	Run when requested by a peripheral

Note: This does not apply to the OSCULP32K oscillator, which is always running and cannot be disabled.

17.6.2 External Multipurpose Crystal Oscillator (XOSC) Operation

The XOSC can operate in two different modes:

- External clock, with an external clock signal connected to the XIN pin
- Crystal oscillator, with an external 0.4-32MHz crystal

The XOSC can be used as a clock source for generic clock generators, as described in the *GCLK – Generic Clock Controller*.

At reset, the XOSC is disabled, and the XIN/XOUT pins can be used as General Purpose I/O (GPIO) pins or by other peripherals in the system. When XOSC is enabled, the operating mode determines the GPIO usage. When in crystal oscillator mode, the XIN and XOUT pins are controlled by the SYSCTRL, and GPIO functions are overridden on both pins. When in external clock mode, only the XIN pin will be overridden and controlled by the SYSCTRL, while the XOUT pin can still be used as a GPIO pin.

The XOSC is enabled by writing a one to the Enable bit in the External Multipurpose Crystal Oscillator Control register (XOSC.ENABLE). To enable the XOSC as a crystal oscillator, a one must be written to the XTAL Enable bit (XOSC.XTALEN). If XOSC.XTALEN is zero, external clock input will be enabled.

When in crystal oscillator mode (XOSC.XTALEN is one), the External Multipurpose Crystal Oscillator Gain (XOSC.GAIN) must be set to match the external crystal oscillator frequency. If the External Multipurpose Crystal Oscillator Automatic Amplitude Gain Control (XOSC.AMPGC) is one, the oscillator amplitude will be automatically adjusted, and in most cases result in a lower power consumption.

The XOSC will behave differently in different sleep modes based on the settings of XOSC.RUNSTDBY, XOSC.ONDEMAND and XOSC.ENABLE:

XOSC.RUNSTDBY	XOSC.ONDEMAND	XOSC.ENABLE	Sleep Behavior
-	-	0	Disabled
0	0	1	Always run in IDLE sleep modes. Disabled in STANDBY sleep mode.
0	1	1	Only run in IDLE sleep modes if requested by a peripheral. Disabled in STANDBY sleep mode.
1	0	1	Always run in IDLE and STANDBY sleep modes.
1	1	1	Only run in IDLE or STANDBY sleep modes if requested by a peripheral.

After a hard reset, or when waking up from a sleep mode where the XOSC was disabled, the XOSC will need a certain amount of time to stabilize on the correct frequency. This start-up time can be configured by changing the Oscillator Start-Up Time bit group (XOSC.STARTUP) in the External Multipurpose Crystal Oscillator Control

Downloaded from Arrow.com.

register. During the start-up time, the oscillator output is masked to ensure that no unstable clock propagates to the digital logic. The External Multipurpose Crystal Oscillator Ready bit in the Power and Clock Status register (PCLKSR.XOSCRDY) is set when the user-selected start-up time is over. An interrupt is generated on a zero-to-one transition on PCLKSR.XOSCRDY if the External Multipurpose Crystal Oscillator Ready bit in the Interrupt Enable Set register (INTENSET.XOSCRDY) is set.

Note: Do not enter standby mode when an oscillator is in start-up:
Wait for the OSCxRDY bit in SYSCTRL.PCLKSR register to be set before going into standby mode.

Related Links

15. GCLK - Generic Clock Controller

17.6.3 32kHz External Crystal Oscillator (XOSC32K) Operation

The XOSC32K can operate in two different modes:

- External clock, with an external clock signal connected to XIN32
- Crystal oscillator, with an external 32.768kHz crystal connected between XIN32 and XOUT32

The XOSC32K can be used as a source for generic clock generators, as described in the *GCLK – Generic Clock Controller*.

At Power-on Reset (POR) the XOSC32K is disabled, and the XIN32/XOUT32 pins can be used as General Purpose I/O (GPIO) pins or by other peripherals in the system. When XOSC32K is enabled, the operating mode determines the GPIO usage. When in crystal oscillator mode, XIN32 and XOUT32 are controlled by the SYSCTRL, and GPIO functions are overridden on both pins. When in external clock mode, only the XIN32 pin will be overridden and controlled by the SYSCTRL, while the XOUT32 pin can still be used as a GPIO pin.

The external clock or crystal oscillator is enabled by writing a one to the Enable bit (XOSC32K.ENABLE) in the 32kHz External Crystal Oscillator Control register. To enable the XOSC32K as a crystal oscillator, a one must be written to the XTAL Enable bit (XOSC32K.XTALEN). If XOSC32K.XTALEN is zero, external clock input will be enabled.

The oscillator is disabled by writing a zero to the Enable bit (XOSC32K.ENABLE) in the 32kHz External Crystal Oscillator Control register while keeping the other bits unchanged. Writing to the XOSC32K.ENABLE bit while writing to other bits may result in unpredictable behavior. The oscillator remains enabled in all sleep modes if it has been enabled beforehand. The start-up time of the 32kHz External Crystal Oscillator is selected by writing to the Oscillator Start-Up Time bit group (XOSC32K.STARTUP) in the in the 32kHz External Crystal Oscillator Control register. The SYSCTRL masks the oscillator output during the start-up time to ensure that no unstable clock propagates to the digital logic. The 32kHz External Crystal Oscillator Ready bit (PCLKSR.XOSC32KRDY) in the Power and Clock Status register is set when the user-selected startup time is over. An interrupt is generated on a zero-to-one transition of PCLKSR.XOSC32KRDY if the 32kHz External Crystal Oscillator Ready bit (INTENSET.XOSC32KRDY) in the Interrupt Enable Set Register is set.

As a crystal oscillator usually requires a very long start-up time (up to one second), the 32kHz External Crystal Oscillator will keep running across resets, except for power-on reset (POR).

XOSC32K can provide two clock outputs when connected to a crystal. The XOSC32K has a 32.768kHz output enabled by writing a one to the 32kHz External Crystal Oscillator 32kHz Output Enable bit (XOSC32K.EN32K) in the 32kHz External Crystal Oscillator Control register. XOSC32K.EN32K is only usable when XIN32 is connected to a crystal, and not when an external digital clock is applied on XIN32.

Note: Do not enter Standby mode when an oscillator is in start-up:
Wait for the OSCxRDY bit in SYSCTRL.PCLKSR register to be set before going into Standby mode.

Related Links

15. GCLK - Generic Clock Controller

17.6.4 32 kHz Internal Oscillator (OSC32K) Operation

The OSC32K provides a tunable, low-speed and low-power clock source.

The OSC32K can be used as a source for the generic clock generators, as described in the *GCLK – Generic Clock Controller*.

The OSC32K is disabled by default. The OSC32K is enabled by writing a one to the 32 kHz Internal Oscillator Enable bit (OSC32K.ENABLE) in the 32 kHz Internal Oscillator Control register. It is disabled by writing a zero to

Downloaded from Arrow.com.

OSC32K.ENABLE. The OSC32K has a 32.768 kHz output enabled by writing a one to the 32 kHz Internal Oscillator 32 kHz Output Enable bit (OSC32K.EN32K). Both of the OSC32K.ENABLE and OSC32K.EN32K bits must be set for the clock to start. When the clock is stable, the PCLKSR.OSC32KRDY bit will go high and the clock will propagate in the design.

The frequency of the OSC32K oscillator is controlled by the value in the 32 kHz Internal Oscillator Calibration bits (OSC32K.CALIB) in the 32 kHz Internal Oscillator Control register. The OSC32K.CALIB value must be written by the user. Flash Factory Calibration values are stored in the NVM Software Calibration Area (refer to *NVM Software Calibration Area Mapping*). When writing to the Calibration bits, the user must wait for the PCLKSR.OSC32KRDY bit to go high before the value is committed to the oscillator.

Related Links

15. GCLK - Generic Clock Controller
10.3.2 NVM Software Calibration Area Mapping

17.6.5 32kHz Ultra Low Power Internal Oscillator (OSCULP32K) Operation

The OSCULP32K provides a tunable, low-speed and ultra-low-power clock source. The OSCULP32K is factory-calibrated under typical voltage and temperature conditions. The OSCULP32K should be preferred to the OSC32K whenever the power requirements are prevalent over frequency stability and accuracy.

The OSCULP32K can be used as a source for the generic clock generators, as described in the *GCLK – Generic Clock Controller*.

The OSCULP32K is enabled by default after a power-on reset (POR) and will always run except during POR. The OSCULP32K has a 32.768kHz output and a 1.024kHz output that are always running.

The frequency of the OSCULP32K oscillator is controlled by the value in the 32kHz Ultra Low Power Internal Oscillator Calibration bits (OSCULP32K.CALIB) in the 32kHz Ultra Low Power Internal Oscillator Control register. OSCULP32K.CALIB is automatically loaded from Flash Factory Calibration during startup, and is used to compensate for process variation, as described in the *Electrical Characteristics*. The calibration value can be overridden by the user by writing to OSCULP32K.CALIB.

Related Links

37. Electrical Characteristics at 85°C
15. GCLK - Generic Clock Controller

17.6.6 8MHz Internal Oscillator (OSC8M) Operation

OSC8M is an internal oscillator operating in open-loop mode and generating an 8MHz frequency. The OSC8M is factory-calibrated under typical voltage and temperature conditions.

OSC8M is the default clock source that is used after a power-on reset (POR). The OSC8M can be used as a source for the generic clock generators, as described in the *GCLK – Generic Clock Controller*.

In order to enable OSC8M, the Oscillator Enable bit in the OSC8M Control register (OSC8M.ENABLE) must be written to one. OSC8M will not be enabled until OSC8M.ENABLE is set. In order to disable OSC8M, OSC8M.ENABLE must be written to zero. OSC8M will not be disabled until OSC8M is cleared.

The frequency of the OSC8M oscillator is controlled by the value in the calibration bits (OSC8M.CALIB) in the OSC8M Control register. CALIB is automatically loaded from Flash Factory Calibration during start-up, and is used to compensate for process variation, as described in the *Electrical Characteristics*.

The user can control the oscillation frequency by writing to the Frequency Range (FRANGE) and Calibration (CALIB) bit groups in the 8MHz RC Oscillator Control register (OSC8M). It is not recommended to update the FRANGE and CALIB bits when the OSC8M is enabled. As this is in open-loop mode, the frequency will be voltage, temperature and process dependent. Refer to the *Electrical Characteristics* for details.

OSC8M is automatically switched off in certain sleep modes to reduce power consumption, as described in the *PM – Power Manager*.

Related Links

16. PM – Power Manager
37. Electrical Characteristics at 85°C
15. GCLK - Generic Clock Controller

Downloaded from Arrow.com.

17.6.7 Digital Frequency Locked Loop (DFLL48M) Operation

The DFLL48M can operate in both open-loop mode and closed-loop mode. In closed-loop mode, a low-frequency clock with high accuracy can be used as the reference clock to get high accuracy on the output clock (CLK_DFLL48M).

The DFLL48M can be used as a source for the generic clock generators, as described in the *GCLK – Generic Clock Controller*.

Related Links

15. GCLK - Generic Clock Controller

17.6.7.1 Basic Operation

17.6.7.1.1 Open-Loop Operation

After any reset, the open-loop mode is selected. When operating in open-loop mode, the output frequency of the DFLL48M will be determined by the values written to the DFLL Coarse Value bit group and the DFLL Fine Value bit group (DFLLVAL.COARSE and DFLLVAL.FINE) in the DFLL Value register. Using "DFLL48M COARSE CAL" value from *NVM Software Calibration Area Mapping* in DFLL.COARSE helps to output a frequency close to 48 MHz.

It is possible to change the values of DFLLVAL.COARSE and DFLLVAL.FINE and thereby the output frequency of the DFLL48M output clock, CLK_DFLL48M, while the DFLL48M is enabled and in use. CLK_DFLL48M is ready to be used when PCLKSR.DFLLRDY is set after enabling the DFLL48M.

Related Links

10.3.2 NVM Software Calibration Area Mapping

17.6.7.1.2 Closed-Loop Operation

In closed-loop operation, the output frequency is continuously regulated against a reference clock. Once the multiplication factor is set, the oscillator fine tuning is automatically adjusted. The DFLL48M must be correctly configured before closed-loop operation can be enabled. After enabling the DFLL48M, it must be configured in the following way:

1. Enable and select a reference clock (CLK_DFLL48M_REF). CLK_DFLL48M_REF is Generic Clock Channel 0 (GCLK_DFLL48M_REF). Refer to *GCLK – Generic Clock Controller* for details.
2. Select the maximum step size allowed in finding the Coarse and Fine values by writing the appropriate values to the DFLL Coarse Maximum Step and DFLL Fine Maximum Step bit groups (DFLLMUL.CSTEP and DFLLMUL.FSTEP) in the DFLL Multiplier register. A small step size will ensure low overshoot on the output frequency, but will typically result in longer lock times. A high value might give a large overshoot, but will typically provide faster locking. DFLLMUL.CSTEP and DFLLMUL.FSTEP should not be higher than 50% of the maximum value of DFLLVAL.COARSE and DFLLVAL.FINE, respectively.
3. Select the multiplication factor in the DFLL Multiply Factor bit group (DFLLMUL.MUL) in the DFLL Multiplier register. Care must be taken when choosing DFLLMUL.MUL so that the output frequency does not exceed the maximum frequency of the DFLL.
4. Start the closed loop mode by writing a one to the DFLL Mode Selection bit (DFLLCTRL.MODE) in the DFLL Control register.

The frequency of CLK_DFLL48M ($F_{clkdfll48m}$) is given by:

$$F_{\mathrm{clkdfll48}m} = \mathrm{DFLLMUL} \cdot \mathrm{MUL} \times F_{\mathrm{clkdfll48mref}}$$

where $F_{clkdfll48mref}$ is the frequency of the reference clock (CLK_DFLL48M_REF). DFLLVAL.COARSE and DFLLVAL.FINE are read-only in closed-loop mode, and are controlled by the frequency tuner to meet user specified frequency. In closed-loop mode, the value in DFLLVAL.COARSE is used by the frequency tuner as a starting point for Coarse. Writing DFLLVAL.COARSE to a value close to the final value before entering closed-loop mode will reduce the time needed to get a lock on Coarse.

Using "DFLL48M COARSE CAL" from *NVM Software Calibration Area Mapping* for DFLL.COARSE will start DFLL with a frequency close to 48 MHz.

Following Software sequence should be followed while using the same.

1. load "DFLL48M COARSE CAL" from *NVM User Row Mapping* in DFLL.COARSE register
2. Set DFLLCTRL.BPLCKC bit

Downloaded from Arrow.com.

3. Start DFLL close loop

This procedure will reduce DFLL Lock time to DFLL Fine lock time.

Related Links

15. GCLK - Generic Clock Controller

10.3.2 NVM Software Calibration Area Mapping

17.6.7.1.3 Frequency Locking

The locking of the frequency in closed-loop mode is divided into two stages. In the first, coarse stage, the control logic quickly finds the correct value for DFLLVAL.COARSE and sets the output frequency to a value close to the correct frequency. On coarse lock, the DFLL Locked on Coarse Value bit (PCLKSR.DFLLLOCKC) in the Power and Clocks Status register will be set.

In the second, fine stage, the control logic tunes the value in DFLLVAL.FINE so that the output frequency is very close to the desired frequency. On fine lock, the DFLL Locked on Fine Value bit (PCLKSR.DFLLLOCKF) in the Power and Clocks Status register will be set.

Interrupts are generated by both PCLKSR.DFLLLOCKC and PCLKSR.DFLLLOCKF if INTENSET.DFLLOCKC or INTENSET.DFLLOCKF are written to one.

CLK_DFLL48M is ready to be used when the DFLL Ready bit (PCLKSR.DFLLRDY) in the Power and Clocks Status register is set, but the accuracy of the output frequency depends on which locks are set. For lock times, refer to the *Electrical Characteristics*.

Related Links

37. Electrical Characteristics at 85°C

17.6.7.1.4 Frequency Error Measurement

The ratio between CLK_DFLL48M_REF and CLK48M_DFLL is measured automatically when the DFLL48M is in closed-loop mode. The difference between this ratio and the value in DFLLMUL.MUL is stored in the DFLL Multiplication Ratio Difference bit group(DFLLVAL.DIFF) in the DFLL Value register. The relative error on CLK_DFLL48M compared to the target frequency is calculated as follows:

$$\mathrm{ERROR} = \frac{\mathrm{DIFF}}{\mathrm{MUL}}$$

17.6.7.1.5 Drift Compensation

If the Stable DFLL Frequency bit (DFLLCTRL.STABLE) in the DFLL Control register is zero, the frequency tuner will automatically compensate for drift in the CLK_DFLL48M without losing either of the locks. This means that DFLLVAL.FINE can change after every measurement of CLK_DFLL48M.

The DFLLVAL.FINE value overflows or underflows can occur in close loop mode when the clock source reference drifts or is unstable. This will set the DFLL Out Of Bounds bit (PCLKSR.DFLLOOB) in the Power and Clocks Status register.

To avoid this error, the reference clock in close loop mode must be stable, an external oscillator is recommended and internal oscillator forbidden. The better choice is to use an XOSC32K.

17.6.7.1.6 Reference Clock Stop Detection

If CLK_DFLL48M_REF stops or is running at a very low frequency (slower than CLK_DFLL48M/(2 * MUL_{MAX})), the DFLL Reference Clock Stopped bit (PCLKSR.DFLLRCS) in the Power and Clocks Status register will be set. Detecting a stopped reference clock can take a long time, on the order of 217 CLK_DFLL48M cycles. When the reference clock is stopped, the DFLL48M will operate as if in open-loop mode. Closed-loop mode operation will automatically resume if the CLK_DFLL48M_REF is restarted. An interrupt is generated on a zero-to-one transition on PCLKSR.DFLLRCS if the DFLL Reference Clock Stopped bit (INTENSET.DFLLRCS) in the Interrupt Enable Set register is set.

17.6.7.2 Additional Features

17.6.7.2.1 Dealing with Delay in the DFLL in Closed-Loop Mode

The time from selecting a new CLK_DFLL48M frequency until this frequency is output by the DFLL48M can be up to several microseconds. If the value in DFLLMUL.MUL is small, this can lead to instability in the DFLL48M locking mechanism, which can prevent the DFLL48M from achieving locks. To avoid this, a chill cycle, during which the

Downloaded from Arrow.com.

CLK_DFLL48M frequency is not measured, can be enabled. The chill cycle is enabled by default, but can be disabled by writing a one to the DFLL Chill Cycle Disable bit (DFLLCTRL.CCDIS) in the DFLL Control register. Enabling chill cycles might double the lock time.

Another solution to this problem consists of using less strict lock requirements. This is called Quick Lock (QL), which is also enabled by default, but it can be disabled by writing a one to the Quick Lock Disable bit (DFLLCTRL.QLDIS) in the DFLL Control register. The Quick Lock might lead to a larger spread in the output frequency than chill cycles, but the average output frequency is the same.

17.6.7.2.2 USB Clock Recovery Mode

USB Clock Recovery mode can be used to create the 48MHz USB clock from the USB Start Of Frame (SOF). This mode is enabled by writing a '1' to both the USB Clock Recovery Mode bit and the Mode bit in DFLL Control register (DFLLCTRL.USBCRM and DFLLCTRL.MODE).

Note: In USB Clock Recovery mode, the status bits of the DFLL in OSCCTRL.STATUS are determined by the USB bus activity, and have no valid meaning.

The SOF signal from USB device will be used as reference clock (CLK_DFLL_REF), ignoring the selected generic clock reference. When the USB device is connected, a SOF will be sent every 1ms, thus DFLLVAL.MUX bits should be written to 0xBB80 to obtain a 48MHz clock.

In USB clock recovery mode, the DFLLCTRL.BPLCKC bit state is ignored, and the value stored in the DFLLVAL.COARSE will be used as final Coarse Value. The COARSE calibration value can be loaded from NVM OTP row by software. The locking procedure will also go instantaneously to the fine lock search.

The DFLLCTRL.QLDIS bit must be cleared and DFLLCTRL.CCDIS should be set to speed up the lock phase. The DFLLCTRL.STABLE bit state is ignored, an auto jitter reduction mechanism is used instead.

17.6.7.2.3 Wake from Sleep Modes

DFLL48M can optionally reset its lock bits when it is disabled. This is configured by the Lose Lock After Wake bit (DFLLCTRL.LLAW) in the DFLL Control register. If DFLLCTRL.LLAW is zero, the DFLL48M will be re-enabled and start running with the same configuration as before being disabled, even if the reference clock is not available. The locks will not be lost. When the reference clock has restarted, the Fine tracking will quickly compensate for any frequency drift during sleep if DFLLCTRL.STABLE is zero. If DFLLCTRL.LLAW is one when the DFLL is turned off, the DFLL48M will lose all its locks, and needs to regain these through the full lock sequence.

17.6.7.2.4 Accuracy

There are three main factors that determine the accuracy of $F_{clkdfll48m}$. These can be tuned to obtain maximum accuracy when fine lock is achieved.

- Fine resolution: The frequency step between two Fine values. This is relatively smaller for high output frequencies.
- Resolution of the measurement: If the resolution of the measured $F_{clkdfll48m}$ is low, i.e., the ratio between the CLK_DFLL48M frequency and the CLK_DFLL48M_REF frequency is small, then the DFLL48M might lock at a frequency that is lower than the targeted frequency. It is recommended to use a reference clock frequency of 32kHz or lower to avoid this issue for low target frequencies.
- The accuracy of the reference clock.

17.6.8 Fractional Digital Phase-Locked Loop Controller (FDPLL96M) Operation

17.6.8.1 Overview

The FDPLL96M controller allows flexible interface to the core digital function of the Digital Phase Locked Loop (DPLL). The FDPLL96M integrates a digital filter with a proportional integral controller, a Time-to-Digital Converter (TDC), a test mode controller, a Digitally Controlled Oscillator (DCO) and a PLL controller. It also provides a fractional multiplier of frequency N between the input and output frequency.

The CLK_FDPLL96M_REF is the DPLL input clock reference. The selectable sources for the reference clock are XOSC32K, XOSC and GCLK_DPLL. The path between XOSC and input multiplexer integrates a clock divider. The selected clock must be configured and enabled before using the FDPLL96M. If the GCLK is selected as reference clock, it must be configured and enabled in the Generic Clock Controller before using the FDPLL96M. Refer to *GCLK – Generic Clock Controller* for details. If the GCLK_DPLL is selected as the source for the CLK_FDPLL96M_REF, care must be taken to make sure the source for this GCLK is within the valid frequency range for the FDPLL96M.

Downloaded from Arrow.com.

The XOSC source can be divided inside the FDPLL96M. The user must make sure that the programmable clock divider and XOSC frequency provides a valid CLK_FDPLL96M_REF clock frequency that meets the FDPLL96M input frequency range.

The output clock of the FDPLL96M is CLK_FDPLL96M. The state of the CLK_FDPLL96M clock only depends on the FDPLL96M internal control of the final clock gater CG.

The FDPLL96M requires a 32kHz clock from the GCLK when the FDPLL96M internal lock timer is used. This clock must be configured and enabled in the Generic Clock Controller before using the FDPLL96M. Refer to *GCLK – Generic Clock Controller* for details.

Table 17-3. Generic Clock Input for FDPLL96M

Generic Clock	FDPLL96M
FDPLL96M 32kHz clock	GCLK_DPLL_32K for internal lock timer
FDPLL96M	GCLK_DPLL for CLK_FDPLL96M_REF

Related Links

15. GCLK - Generic Clock Controller

17.6.8.2 Block Diagram

Figure 17-2. FDPLL96M Block Diagram

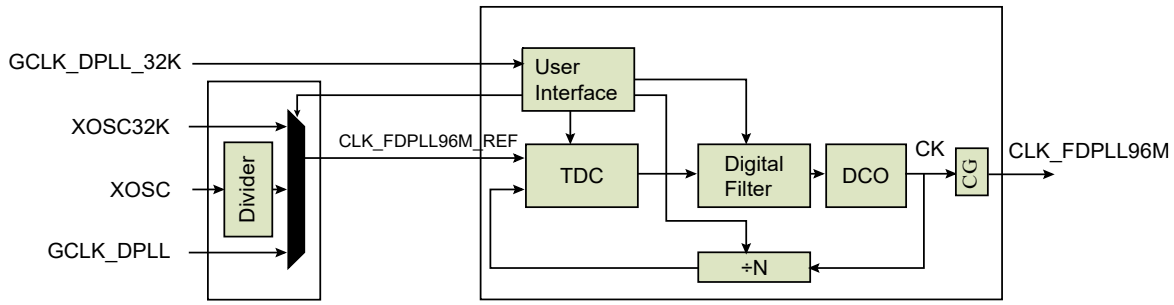

17.6.8.3 Principle of Operation

The task of the FDPLL96M is to maintain coherence between the input reference clock signal (CLK_FDPLL96M_REF) and the respective output frequency CK via phase comparison. The FDPLL96M supports three independent sources of clocks; XOSC32K, XOSC and GCLK_DPLL. When the FDPLL96M is enabled, the relationship between the reference clock (CLK_FDPLL96M_REF) frequency and the output clock (CLK_FDPLL96M) frequency is defined below.

$$f_{clk_fdpll96m} = f_{clk_fdpll96m_ref} \times \left(LDR + 1 + \frac{LDRFRAC}{16}\right)$$

Where LDR is the loop divider ratio integer part, LDRFRAC is the loop divider ratio fractional part, f_{ckrx} is the frequency of the selected reference clock and f_{ck} is the frequency of the FDPLL96M output clock. As previously stated a clock divider exist between XOSC and CLK_FDPLL96M_REF. The frequency between the two clocks is defined below.

$$f_{clk_fdpll96m_ref} = f_{xosc} \times \left(\frac{1}{2 \times (DIV + 1)}\right)$$

When the FDPLL96M is disabled, the output clock is reset. If the loop divider ratio fractional part (DPLLRATIO.LDRFRAC) field is reset, the FDPLL96M works in integer mode, otherwise the fractional mode is activated. It shall be noted that fractional part has a negative impact on the jitter of the FDPLL96M.

Example (integer mode only): assuming f_{ckr} = 32kHz and f_{ck} = 48MHz, the multiplication ratio is 1500. It means that LDR shall be set to 1499.

Example (fractional mode): assuming f_{ckr} = 32kHz and f_{ck} = 48.006MHz, the multiplication ratio is 1500.1875 (1500 + 3/16). Thus LDR is set to 1499 and LDRFRAC to 3.

Downloaded from Arrow.com.

17.6.8.4 Initialization, Enabling, Disabling and Resetting

The FDPLL96M is enabled by writing a one to the Enable bit in the DPLL Control A register (DPLLCTRLA.ENABLE). The FDPLL96M is disabled by writing a zero to DPLLCTRLA.ENABLE. The frequency of the FDPLL96M output clock CK is stable when the module is enabled and when the DPLL Lock Status bit in the DPLL Status register (DPLLSTATUS.LOCK) bit is set. When DPLLCTRLB.LTIME is different from 0, a user defined lock time is used to validate the lock operation. In this case the lock time is constant. If DPLLCTRLB.LTIME is reset, the lock signal is linked with the status bit of the DPLL, the lock time vary depending on the filter selection and final target frequency.

When DPLLCTRLB.WUF is set, the wake up fast mode is activated. In that mode, the clock gating cell is enabled at the end of the startup time. At that time, the final frequency is not stable as it is still in the acquisition period, but it allows saving several milliseconds. After first acquisition, DPLLCTRLB.LBYPASS indicates if the Lock signal is discarded from the control of the clock gater generating the output clock CLK_FDPLL96M.

Table 17-4. CLK_FDPLL96M Behavior from Start-up to First Edge Detection.

WUF	LTIME	CLK_FDPLL96M Behavior
0	0	Normal Mode: First Edge when lock is asserted
0	Not Equal To Zero	Lock Timer Timeout mode: First Edge when the timer downcounts to 0.
1	X	Wake Up Fast Mode: First Edge when CK is active (start-up time)

Table 17-5. CLK_FDPLL96M behavior after First Edge detection.

LBYPASS	CLK_FDPLL96M Behavior
0	Normal Mode: the CLK_FDPLL96M is turned off when lock signal is low.
1	Lock Bypass Mode: the CLK_FDPLL96M is always running, lock is irrelevant.

Figure 17-3. CK and CLK_FDPLL96M Off Mode to Running Mode

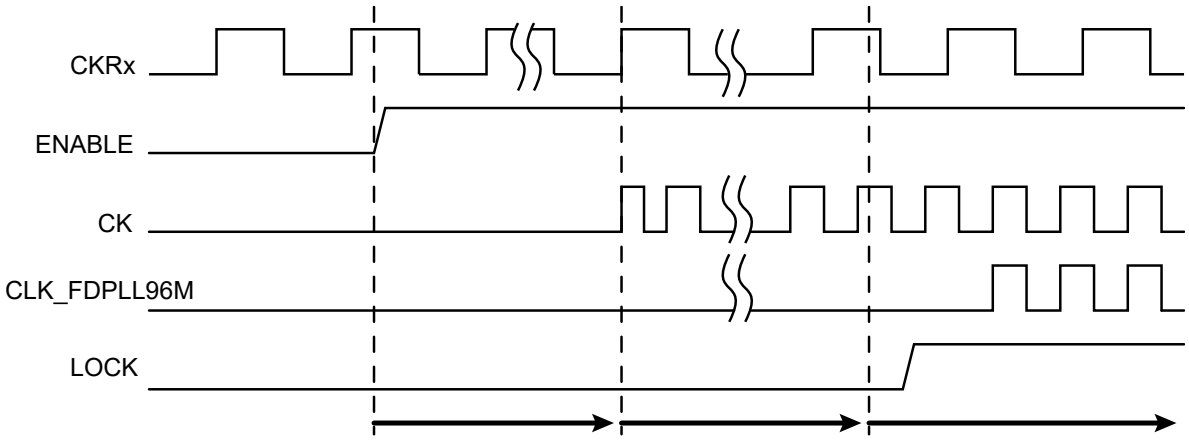

Downloaded from Arrow.com.

Figure 17-4. CK and CLK_FDPLL96M Off Mode to Running Mode when Wake-Up Fast is Activated

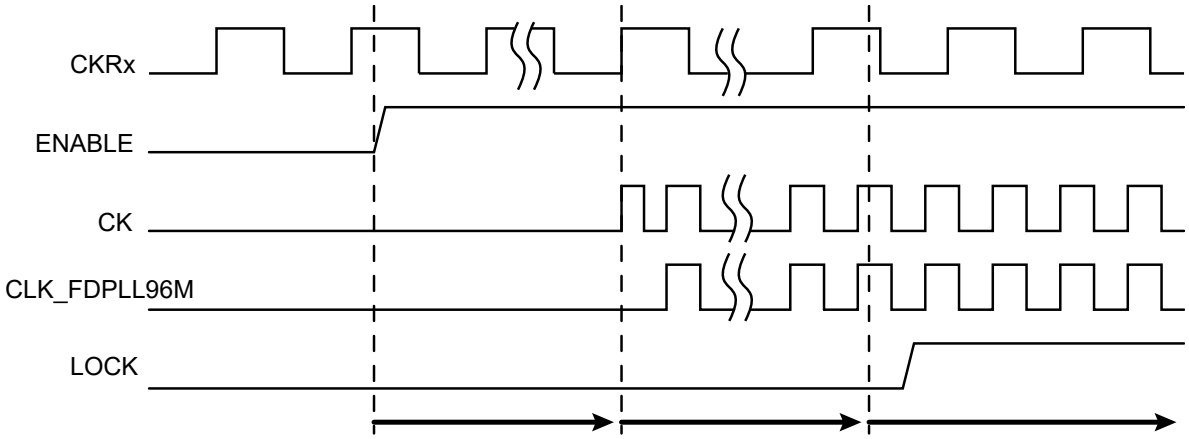

Figure 17-5. CK and CLK_FDPLL96M Running Mode to Off Mode

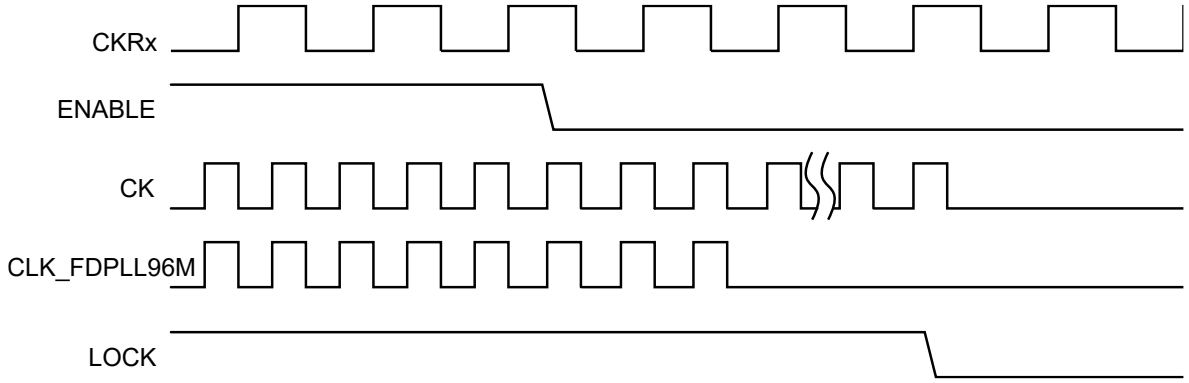

17.6.8.5 Reference Clock Switching

When a software operation requires reference clock switching, the normal operation is to disable the FDPLL96M, modify the DPLLCTRLB.REFCLK to select the desired reference source and activate the FDPLL96M again.

17.6.8.6 Loop Divider Ratio updates

The FDPLL96M supports on-the-fly update of the DPLLRATIO register, so it is allowed to modify the loop divider ratio and the loop divider ratio fractional part when the FDPLL96M is enabled. At that time, the DPLLSTATUS.LOCK bit is cleared and set again by hardware when the output frequency reached a stable state. The DPLL Lock Fail bit in the Interrupt Flag Status and Clear register (INTFLAG.DPLLLCK) is set when a falling edge has been detected. The flag is cleared when the software write a one to the interrupt flag bit location.

Downloaded from Arrow.com.

Figure 17-6. RATIOCTRL Register Update Operation

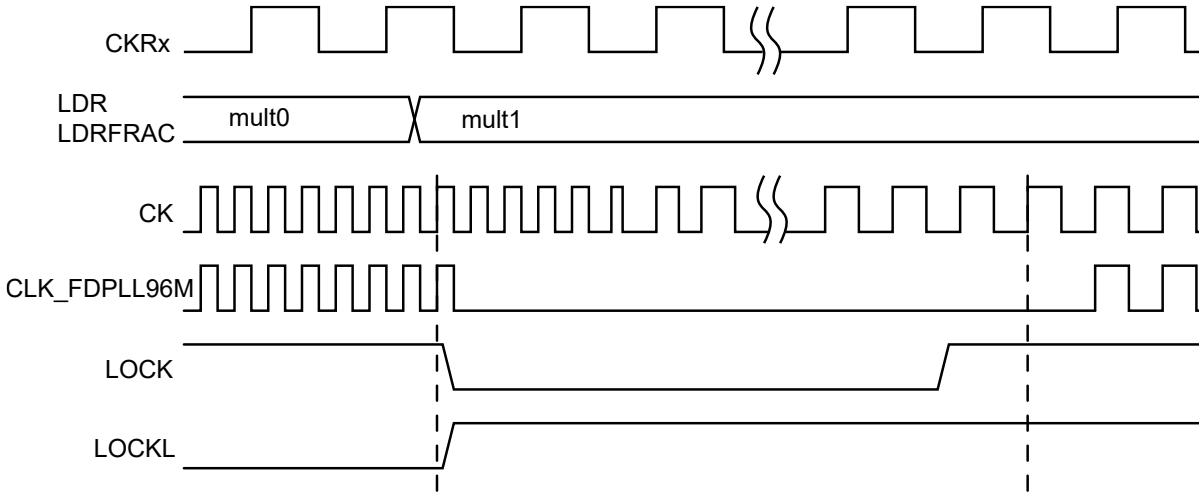

17.6.8.7 Digital Filter Selection

The PLL digital filter (PI controller) is automatically adjusted in order to provide a good compromise between stability and jitter. Nevertheless a software operation can override the filter setting using the DPLLCTRLB.FILTER field. The DPLLCTRLB.LPEN field can be use to bypass the TDC module.

17.6.9 3.3V Brown-Out Detector Operation

The 3.3V BOD monitors the 3.3V VDDANA supply (BOD33). It supports continuous or sampling modes.

The threshold value action (reset the device or generate an interrupt), the Hysteresis configuration, as well as the enable/disable settings are loaded from Flash User Calibration at startup, and can be overridden by writing to the corresponding BOD33 register bit groups.

17.6.9.1 3.3V Brown-Out Detector (BOD33)

The 3.3V Brown-Out Detector (BOD33) monitors the VDDANA supply and compares the voltage with the brown-out threshold level set in the BOD33 Level bit group (BOD33.LEVEL) in the BOD33 register. The BOD33 can generate either an interrupt or a reset when VDDANA crosses below the brown-out threshold level. The BOD33 detection status can be read from the BOD33 Detection bit (PCLKSR.BOD33DET) in the Power and Clocks Status register.

At start-up or at power-on reset (POR), the BOD33 register values are loaded from the Flash User Row. Refer to *NVM User Row Mapping* for more details.

Related Links

10.3.1 NVM User Row Mapping

17.6.9.2 Continuous Mode

When the BOD33 Mode bit (BOD33.MODE) in the BOD33 register is written to zero and the BOD33 is enabled, the BOD33 operates in continuous mode. In this mode, the BOD33 is continuously monitoring the VDDANA supply voltage.

Continuous mode is the default mode for BOD33.

17.6.9.3 Sampling Mode

The Sampling mode is a low-power mode where the BOD33 is being repeatedly enabled on a sampling clock's ticks. The BOD33 will monitor the supply voltage for a short period of time and then go to a low-power disabled state until the next sampling clock tick.

When the BOD is in sampling mode, it requests its reference only when needed. This reference will be ready when the supply voltage has reached at least 95% of its target voltage. This can lead to a shift of the BOD threshold level of up to 5% if the bandgap is not requested by anything else during standby (i.e., internal regulator is not on the LDO (VREG.RUNSTDBY=0); the bandgap is not used by the ADC, AC, or DAC; and the voltage doubler of the AC is disabled).

Downloaded from Arrow.com.

Sampling mode is enabled by writing one to BOD33.MODE. The frequency of the clock ticks ($F_{clksampling}$) is controlled by the BOD33 Prescaler Select bit group (BOD33.PSEL) in the BOD33 register.

$$F_{\text{clksampling}} = \frac{F_{\text{clkprescaler}}}{2^{(\text{PSEL}+1)}}$$

The prescaler signal ($F_{clkprescaler}$) is a 1 kHz clock, output from the32 kHz Ultra Low-Power Oscillator, OSCULP32K.

As the Sampling mode clock is different from the APB clock domain, synchronization among the clocks is necessary. The next figure shows a block diagram of the Sampling mode. The BOD33Synchronization Ready bit (PCLKSR.B33SRDY) in the Power and Clocks Status register show the synchronization ready status of the synchronizer. Writing attempts to the BOD33 register are ignored while PCLKSR.B33SRDY is zero.

Figure 17-7. Sampling Mode Block Diagram

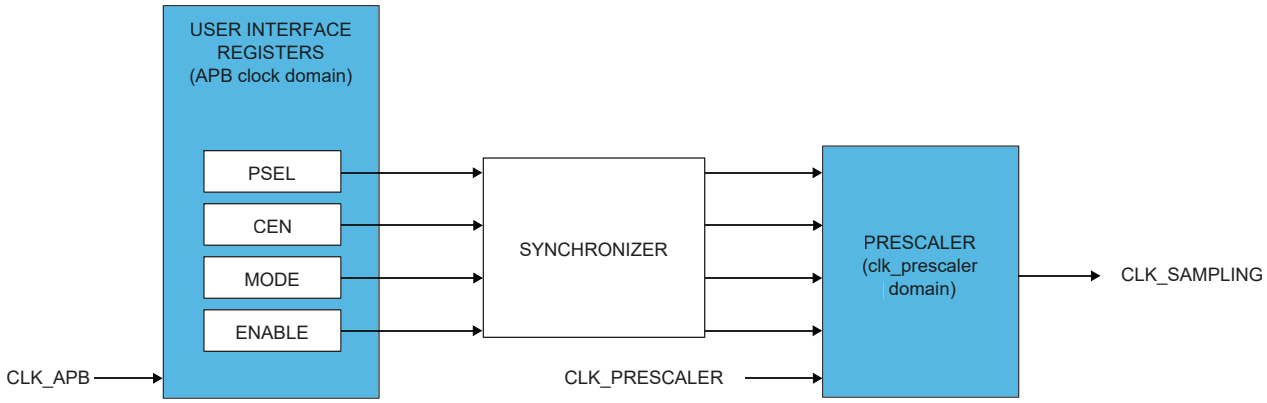

The BOD33 Clock Enable bit (BOD33.CEN) in the BOD33 register should always be disabled before changing the prescaler value. To change the prescaler value for the BOD33 during Sampling mode, the following steps need to be taken:

1. Wait until the PCLKSR.B33SRDY bit is set.
2. Write the selected value to the BOD33.PSEL bit group.

17.6.9.4 Hysteresis

The hysteresis functionality can be used in both continuous and sampling mode. Writing a one to the BOD33 Hysteresis bit (BOD33.HYST) in the BOD33 register will add hysteresis to the BOD33 threshold level.

17.6.10 Voltage Reference System Operation

The Voltage Reference System (VREF) consists of a Bandgap Reference Voltage Generator and a temperature sensor.

The Bandgap Reference Voltage Generator is factory-calibrated under typical voltage and temperature conditions.

At reset, the VREF.CAL register value is loaded from Flash Factory Calibration.

The temperature sensor can be used to get an absolute temperature in the temperature range of CMIN to CMAX degrees Celsius. The sensor will output a linear voltage proportional to the temperature. The output voltage and temperature range are located in the *Electrical Characteristics*. To calculate the temperature from a measured voltage, the following formula can be used:

$$C_{\text{MIN}} + (\text{Vmes}+ - \text{Vout}_{\text{MAX}})\frac{\Delta\text{temperature}}{\Delta\text{voltage}}$$

Related Links

37. Electrical Characteristics at 85°C

17.6.10.1 User Control of the Voltage Reference System

To enable the temperature sensor, write a one to the Temperature Sensor Enable bit (VREF.TSEN) in the VREF register. The temperature sensor is not available on the DA1 devices.

The temperature sensor can be redirected to the ADC for conversion.

Downloaded from Arrow.com.

The Bandgap Reference Voltage Generator output can also be routed to the ADC if the Bandgap Output Enable bit (VREF.BGOUTEN) in the VREF register is set.

The Bandgap Reference Voltage Generator output level is determined by the CALIB bit group (VREF.CALIB) value in the VREF register. The default calibration value can be overridden by writing to the CALIB bit group.

17.6.11 Voltage Regulator System Operation

The embedded Voltage Regulator (VREG) is an internal voltage regulator that provides the core logic supply (VDDCORE).

17.6.12 DMA Operation

Not applicable.

17.6.13 Interrupts

The SYSCTRL has the following interrupt sources:

- XOSCRDY - Multipurpose Crystal Oscillator Ready: A “0-to-1” transition on the PCLKSR.XOSCRDY bit is detected
- XOSC32KRDY - 32kHz Crystal Oscillator Ready: A “0-to-1” transition on the PCLKSR.XOSC32KRDY bit is detected
- OSC32KRDY - 32kHz Internal Oscillator Ready: A “0-to-1” transition on the PCLKSR.OSC32KRDY bit is detected
- OSC8MRDY - 8MHz Internal Oscillator Ready: A “0-to-1” transition on the PCLKSR.OSC8MRDY bit is detected
- DFLLRDY - DFLL48M Ready: A “0-to-1” transition on the PCLKSR.DFLLRDY bit is detected
- DFLLOOB - DFLL48M Out Of Boundaries: A “0-to-1” transition on the PCLKSR.DFLLOOB bit is detected
- DFLLLOCKF - DFLL48M Fine Lock: A “0-to-1” transition on the PCLKSR.DFLLLOCKF bit is detected
- DFLLLOCKC - DFLL48M Coarse Lock: A “0-to-1” transition on the PCLKSR.DFLLLOCKC bit is detected
- DFLLRCS - DFLL48M Reference Clock has Stopped: A “0-to-1” transition on the PCLKSR.DFLLRCS bit is detected
- BOD33RDY - BOD33 Ready: A “0-to-1” transition on the PCLKSR.BOD33RDY bit is detected
- BOD33DET - BOD33 Detection: A “0-to-1” transition on the PCLKSR.BOD33DET bit is detected. This is an asynchronous interrupt and can be used to wake-up the device from any sleep mode.
- B33SRDY - BOD33 Synchronization Ready: A “0-to-1” transition on the PCLKSR.B33SRDY bit is detected
- PLL Lock (LOCK): Indicates that the DPLL Lock bit is asserted.
- PLL Lock Lost (LOCKL): Indicates that a falling edge has been detected on the Lock bit during normal operation mode.
- PLL Lock Timer Timeout (LTTO): This interrupt flag indicates that the software defined time DPLLCTRLB.LTIME has elapsed since the start of the FDPLL96M.

Each interrupt source has an interrupt flag associated with it. The interrupt flag in the Interrupt Flag Status and Clear (INTFLAG) register is set when the interrupt condition occurs. Each interrupt can be individually enabled by writing a one to the corresponding bit in the Interrupt Enable Set (INTENSET) register, and disabled by writing a one to the corresponding bit in the Interrupt Enable Clear (INTENCLR) register. An interrupt request is generated when the interrupt flag is set and the corresponding interrupt is enabled. The interrupt request remains active until the interrupt flag is cleared, the interrupt is disabled, or the SYSCTRL is reset. See Interrupt Flag Status and Clear (INTFLAG) register for details on how to clear interrupt flags.

All interrupt requests from the peripheral are ORed together on system level to generate one combined interrupt request to the NVIC. Refer to *Nested Vector Interrupt Controller* for details. The user must read the INTFLAG register to determine which interrupt condition is present.

Note: Interrupts must be globally enabled for interrupt requests to be generated. Refer to *Nested Vector Interrupt Controller* for details.

Related Links

11.2 Nested Vector Interrupt Controller

Downloaded from Arrow.com.

17.6.14 Synchronization

Due to the multiple clock domains, values in the DFLL48M Control registers need to be synchronized to other clock domains. The status of this synchronization can be read from the Power and Clocks Status register (PCLKSR). Before writing to any of the DFLL48M Control registers, the user must check that the DFLL Ready bit (PCLKSR.DFLLRDY) in PCLKSR is set to one. When this bit is set, the DFLL48M can be configured and CLK_DFLL48M is ready to be used. Any write to any of the DFLL48M Control registers while DFLLRDY is zero will be ignored. An interrupt is generated on a zero-to-one transition of DFLLRDY if the DFLLRDY bit (INTENSET.DFLLDY) in the Interrupt Enable Set register is set.

In order to read from any of the DFLL48M Configuration registers, the user must request a read synchronization by writing a one to DFLLSYNC.READREQ. The registers can be read only when PCLKSR.DFLLRDY is set. If DFLLSYNC.READREQ is not written before a read, a synchronization will be started, and the bus will be halted until the synchronization is complete. Reading the DFLL48M registers when the DFLL48M is disabled will not halt the bus.

The prescaler counter used to trigger one-shot brown-out detections also operates asynchronously from the peripheral bus. As a consequence, the Prescaler registers require synchronization when written or read. The synchronization results in a delay from when the initialization of the write or read operation begins until the operation is complete.

The write synchronization is triggered by a write to the BOD33 Control register. The Synchronization Ready bit (PCLKSR.B33SRDY) in the PCLKSR register will be cleared when the write synchronization starts and set when the write synchronization is complete. When the write synchronization is ongoing (PCLKSR.B33SRDYis zero), an attempt to do any of the following will cause the peripheral bus to stall until the synchronization is complete:

- Writing to the BOD33Control register
- Reading the BOD33 Control register that was written

The user can poll PCLKSR.B33SRDY or use the INTENSET.B33SRDY interrupt to check when the synchronization is complete. It is also possible to perform the next read/write operation and wait, as this next operation will be completed after the ongoing read/write operation is synchronized.

Downloaded from Arrow.com.

17.7 Register Summary

Offset	Name	Bit Pos.	7	6	5	4	3	2	1	0
0x00	INTENCLR	7:0	DFLLLCKC	DFLLLCKF	DFLLOOB	DFLLRDY	OSC8MRDY	OSC32KRDY	XOSC32KRDY	XOSCRDY
		15:8	DPLLLCKR				B33SRDY	BOD33DET	BOD33RDY	DFLLRCS
		23:16							DPLLLTO	DPLLLCKF
		31:24								
0x04	INTENSET	7:0	DFLLLCKC	DFLLLCKF	DFLLOOB	DFLLRDY	OSC8MRDY	OSC32KRDY	XOSC32KRDY	XOSCRDY
		15:8	DPLLLCKR				B33SRDY	BOD33DET	BOD33RDY	DFLLRCS
		23:16							DPLLLTO	DPLLLCKF
		31:24								
0x08	INTFLAG	7:0	DFLLLCKC	DFLLLCKF	DFLLOOB	DFLLRDY	OSC8MRDY	OSC32KRDY	XOSC32KRDY	XOSCRDY
		15:8	DPLLLCKR				B33SRDY	BOD33DET	BOD33RDY	DFLLRCS
		23:16							DPLLLTO	DPLLLCKF
		31:24								
0x0C	PCLKSR	7:0	DFLLLCKC	DFLLLCKF	DFLLOOB	DFLLRDY	OSC8MRDY	OSC32KRDY	XOSC32KRDY	XOSCRDY
		15:8	DPLLLCKR				B33SRDY	BOD33DET	BOD33RDY	DFLLRCS
		23:16							DPLLLTO	DPLLLCKF
		31:24								
0x10	XOSC	7:0	ONDEMAND	RUNSTDBY				XTALEN	ENABLE	
		15:8	STARTUP[3:0]				AMPGC	GAIN[2:0]		
0x12 ... 0x13	Reserved									
0x14	XOSC32K	7:0	ONDEMAND	RUNSTDBY	AAMPEN		EN32K	XTALEN	ENABLE	
		15:8				WRTLOCK		STARTUP[2:0]		
0x16 ... 0x17	Reserved									
0x18	OSC32K	7:0	ONDEMAND	RUNSTDBY				EN32K	ENABLE	
		15:8				WRTLOCK		STARTUP[2:0]		
		23:16		CALIB[6:0]						
		31:24								
0x1C	OSCULP32K	7:0	WRTLOCK			CALIB[4:0]				
0x1D ... 0x1F	Reserved									
0x20	OSC8M	7:0	ONDEMAND	RUNSTDBY					ENABLE	
		15:8							PRESC[1:0]	
		23:16	CALIB[7:0]							
		31:24	FRANGE[1:0]				CALIB[11:8]			
0x24	DFLLCTRL	7:0	ONDEMAND		USBCRM	LLAW	STABLE	MODE	ENABLE	
		15:8					WAITLOCK	BPLCKC	QLDIS	CCDIS
0x26 ... 0x27	Reserved									
0x28	DFLLVAL	7:0	FINE[7:0]							
		15:8	COARSE[5:0]						FINE[9:8]	
		23:16	DIFF[7:0]							
		31:24	DIFF[15:8]							
0x2C	DFLLMUL	7:0	MUL[7:0]							
		15:8	MUL[15:8]							
		23:16	FSTEP[7:0]							
		31:24	CSTEP[5:0]						FSTEP[9:8]	
0x30	DFLLSYNC	7:0	READREQ							

Downloaded from Arrow.com.

.....continued

Offset	Name	Bit Pos.	7	6	5	4	3	2	1	0
0x31 ... 0x33	Reserved									
0x34	BOD33	7:0		RUNSTDBY		ACTION[1:0]		HYST	ENABLE	
		15:8	PSEL[3:0]						CEN	MODE
		23:16			LEVEL[5:0]					
		31:24								
0x38 ... 0x3B	Reserved									
0x3C	VREG	7:0		RUNSTDBY					ENABLE	
		15:8			FORCELDO					
0x3E ... 0x3F	Reserved									
0x40	VREF	7:0						BGOUTEN	TSEN	
		15:8								
		23:16	CALIB[7:0]							
		31:24						CALIB[10:8]		
0x44	DPLLCTRLA	7:0	ONDEMAND	RUNSTDBY					ENABLE	
0x45 ... 0x47	Reserved									
0x48	DPLLRATIO	7:0	LDR[7:0]							
		15:8					LDR[11:8]			
		23:16					LDRFRAC[3:0]			
		31:24								
0x4C	DPLLCTRLB	7:0			REFCLK[1:0]		WUF	LPEN	FILTER[1:0]	
		15:8				LBYPASS		LTIME[2:0]		
		23:16	DIV[7:0]							
		31:24						DIV[10:8]		
0x50	DPLLSTATUS	7:0					DIV	ENABLE	CLKRDY	LOCK

17.8 Register Description

Registers can be 8, 16, or 32 bits wide. Atomic 8-, 16-, and 32-bit accesses are supported. In addition, the 8-bit quarters and 16-bit halves of a 32-bit register, and the 8-bit halves of a 16-bit register can be accessed directly.

Some registers require synchronization when read and/or written. Synchronization is denoted by the "Read-Synchronized" and/or "Write-Synchronized" property in each individual register description.

Optional write-protection by the Peripheral Access Controller (PAC) is denoted by the "PAC Write-Protection" property in each individual register description.

Downloaded from Arrow.com.

17.8.1 Interrupt Enable Clear

Name: INTENCLR
Offset: 0x00
Reset: 0x00000000
Property: Write-Protected

Bit	31	30	29	28	27	26	25	24
Access	R	R	R	R	R	R	R	R
Reset	0	0	0	0	0	0	0	0

Bit	23	22	21	20	19	18	17	16
							DPLLLTO	DPLLLCKF
Access	R	R	R	R	R	R	R/W	R/W
Reset	0	0	0	0	0	0	0	0

Bit	15	14	13	12	11	10	9	8
	DPLLLCKR				B33SRDY	BOD33DET	BOD33RDY	DFLLRCS
Access	R/W	R	R	R	R/W	R/W	R/W	R/W
Reset	0	0	0	0	0	0	0	0

Bit	7	6	5	4	3	2	1	0
	DFLLLCKC	DFLLLCKF	DFLLOOB	DFLLRDY	OSC8MRDY	OSC32KRDY	XOSC32KRDY	XOSCRDY
Access	R/W	R/W	R/W	R/W	R/W	R/W	R/W	R/W
Reset	0	0	0	0	0	0	0	0

Bit 17 – DPLLLTO DPLL Lock Timeout Interrupt Enable
Writing a zero to this bit has no effect.
Writing a one to this bit will clear the DPLL Lock Timeout Interrupt Enable bit, which disables the DPLL Lock Timeout interrupt.

Value	Description
0	The DPLL Lock Timeout interrupt is disabled.
1	The DPLL Lock Timeout interrupt is enabled, and an interrupt request will be generated when the DPLL Lock Timeout Interrupt flag is set.

Bit 16 – DPLLLCKF DPLL Lock Fall Interrupt Enable
Writing a zero to this bit has no effect.
Writing a one to this bit will clear the DPLL Lock Fall Interrupt Enable bit, which disables the DPLL Lock Fall interrupt.

Value	Description
0	The DPLL Lock Fall interrupt is disabled.
1	The DPLL Lock Fall interrupt is enabled, and an interrupt request will be generated when the DPLL Lock Fall Interrupt flag is set.

Bit 15 – DPLLLCKR DPLL Lock Rise Interrupt Enable
Writing a zero to this bit has no effect.
Writing a one to this bit will clear the DPLL Lock Rise Interrupt Enable bit, which disables the DPLL Lock Rise interrupt.

Value	Description
0	The DPLL Lock Rise interrupt is disabled.
1	The DPLL Lock Rise interrupt is enabled, and an interrupt request will be generated when the DPLL Lock Rise Interrupt flag is set.

Bit 11 – B33SRDY BOD33 Synchronization Ready Interrupt Enable
Writing a zero to this bit has no effect.

Downloaded from Arrow.com.

Writing a one to this bit will clear the BOD33 Synchronization Ready Interrupt Enable bit, which disables the BOD33 Synchronization Ready interrupt.

Value	Description
0	The BOD33 Synchronization Ready interrupt is disabled.
1	The BOD33 Synchronization Ready interrupt is enabled, and an interrupt request will be generated when the BOD33 Synchronization Ready Interrupt flag is set.

Bit 10 – BOD33DET BOD33 Detection Interrupt Enable
Writing a zero to this bit has no effect.
Writing a one to this bit will clear the BOD33 Detection Interrupt Enable bit, which disables the BOD33 Detection interrupt.

Value	Description
0	The BOD33 Detection interrupt is disabled.
1	The BOD33 Detection interrupt is enabled, and an interrupt request will be generated when the BOD33 Detection Interrupt flag is set.

Bit 9 – BOD33RDY BOD33 Ready Interrupt Enable
Writing a zero to this bit has no effect.
Writing a one to this bit will clear the BOD33 Ready Interrupt Enable bit, which disables the BOD33 Ready interrupt.

Value	Description
0	The BOD33 Ready interrupt is disabled.
1	The BOD33 Ready interrupt is enabled, and an interrupt request will be generated when the BOD33 Ready Interrupt flag is set.

Bit 8 – DFLLRCS DFLL Reference Clock Stopped Interrupt Enable
Writing a zero to this bit has no effect.
Writing a one to this bit will clear the DFLL Reference Clock Stopped Interrupt Enable bit, which disables the DFLL Reference Clock Stopped interrupt.

Value	Description
0	The DFLL Reference Clock Stopped interrupt is disabled.
1	The DFLL Reference Clock Stopped interrupt is enabled, and an interrupt request will be generated when the DFLL Reference Clock Stopped Interrupt flag is set.

Bit 7 – DFLLLCKC DFLL Lock Coarse Interrupt Enable
Writing a zero to this bit has no effect.
Writing a one to this bit will clear the DFLL Lock Coarse Interrupt Enable bit, which disables the DFLL Lock Coarse interrupt.

Value	Description
0	The DFLL Lock Coarse interrupt is disabled.
1	The DFLL Lock Coarse interrupt is enabled, and an interrupt request will be generated when the DFLL Lock Coarse Interrupt flag is set.

Bit 6 – DFLLLCKF DFLL Lock Fine Interrupt Enable
Writing a zero to this bit has no effect.
Writing a one to this bit will clear the DFLL Lock Fine Interrupt Enable bit, which disables the DFLL Lock Fine interrupt.

Value	Description
0	The DFLL Lock Fine interrupt is disabled.
1	The DFLL Lock Fine interrupt is enabled, and an interrupt request will be generated when the DFLL Lock Fine Interrupt flag is set.

Bit 5 – DFLLOOB DFLL Out Of Bounds Interrupt Enable
Writing a zero to this bit has no effect.
Writing a one to this bit will clear the DFLL Out Of Bounds Interrupt Enable bit, which disables the DFLL Out Of Bounds interrupt.

Value	Description
0	The DFLL Out Of Bounds interrupt is disabled.

Downloaded from Arrow.com.

Value	Description
1	The DFLL Out Of Bounds interrupt is enabled, and an interrupt request will be generated when the DFLL Out Of Bounds Interrupt flag is set.

Bit 4 – DFLLRDY DFLL Ready Interrupt Enable
Writing a zero to this bit has no effect.
Writing a one to this bit will clear the DFLL Ready Interrupt Enable bit, which disables the DFLL Ready interrupt.

Value	Description
0	The DFLL Ready interrupt is disabled.
1	The DFLL Ready interrupt is enabled, and an interrupt request will be generated when the DFLL Ready Interrupt flag is set.

Bit 3 – OSC8MRDY OSC8M Ready Interrupt Enable
Writing a zero to this bit has no effect.
Writing a one to this bit will clear the OSC8M Ready Interrupt Enable bit, which disables the OSC8M Ready interrupt.

Value	Description
0	The OSC8M Ready interrupt is disabled.
1	The OSC8M Ready interrupt is enabled, and an interrupt request will be generated when the OSC8M Ready Interrupt flag is set.

Bit 2 – OSC32KRDY OSC32K Ready Interrupt Enable
Writing a zero to this bit has no effect.
Writing a one to this bit will clear the OSC32K Ready Interrupt Enable bit, which disables the OSC32K Ready interrupt.

Value	Description
0	The OSC32K Ready interrupt is disabled.
1	The OSC32K Ready interrupt is enabled, and an interrupt request will be generated when the OSC32K Ready Interrupt flag is set.

Bit 1 – XOSC32KRDY XOSC32K Ready Interrupt Enable
Writing a zero to this bit has no effect.
Writing a one to this bit will clear the XOSC32K Ready Interrupt Enable bit, which disables the XOSC32K Ready interrupt.

Value	Description
0	The XOSC32K Ready interrupt is disabled.
1	The XOSC32K Ready interrupt is enabled, and an interrupt request will be generated when the XOSC32K Ready Interrupt flag is set.

Bit 0 – XOSCRDY XOSC Ready Interrupt Enable
Writing a zero to this bit has no effect.
Writing a one to this bit will clear the XOSC Ready Interrupt Enable bit, which disables the XOSC Ready interrupt.

Value	Description
0	The XOSC Ready interrupt is disabled.
1	The XOSC Ready interrupt is enabled, and an interrupt request will be generated when the XOSC Ready Interrupt flag is set.

Downloaded from Arrow.com.

17.8.2 Interrupt Enable Set

Name: INTENSET
Offset: 0x04
Reset: 0x00000000
Property: Write-Protected

Bit	31	30	29	28	27	26	25	24
Access	R	R	R	R	R	R	R	R
Reset	0	0	0	0	0	0	0	0

Bit	23	22	21	20	19	18	17	16
							DPLLLTO	DPLLLCKF
Access	R	R	R	R	R	R	R/W	R/W
Reset	0	0	0	0	0	0	0	0

Bit	15	14	13	12	11	10	9	8
	DPLLLCKR				B33SRDY	BOD33DET	BOD33RDY	DFLLRCS
Access	R/W	R	R	R	R/W	R/W	R/W	R/W
Reset	0	0	0	0	0	0	0	0

Bit	7	6	5	4	3	2	1	0
	DFLLLCKC	DFLLLCKF	DFLLOOB	DFLLRDY	OSC8MRDY	OSC32KRDY	XOSC32KRDY	XOSCRDY
Access	R/W	R/W	R/W	R/W	R/W	R/W	R/W	R/W
Reset	0	0	0	0	0	0	0	0

Bit 17 – DPLLLTO DPLL Lock Timeout Interrupt Enable
Writing a zero to this bit has no effect.
Writing a one to this bit will set the DPLL Lock Timeout Interrupt Enable bit, which enables the DPLL Lock Timeout interrupt.

Value	Description
0	The DPLL Lock Timeout interrupt is disabled.
1	The DPLL Lock Timeout interrupt is enabled, and an interrupt request will be generated when the DPLL Lock Timeout Interrupt flag is set.

Bit 16 – DPLLLCKF DPLL Lock Fall Interrupt Enable
Writing a zero to this bit has no effect.
Writing a one to this bit will set the DPLL Lock Fall Interrupt Enable bit, which enables the DPLL Lock Fall interrupt.

Value	Description
0	The DPLL Lock Fall interrupt is disabled.
1	The DPLL Lock Fall interrupt is enabled, and an interrupt request will be generated when the DPLL Lock Fall Interrupt flag is set.

Bit 15 – DPLLLCKR DPLL Lock Rise Interrupt Enable
Writing a zero to this bit has no effect.
Writing a one to this bit will set the DPLL Lock Rise Interrupt Enable bit, which enables the DPLL Lock Rise interrupt.

Value	Description
0	The DPLL Lock Rise interrupt is disabled.
1	The DPLL Lock Rise interrupt is enabled, and an interrupt request will be generated when the DPLL Lock Rise Interrupt flag is set.

Bit 11 – B33SRDY BOD33 Synchronization Ready Interrupt Enable
Writing a zero to this bit has no effect.
Writing a one to this bit will set the BOD33 Synchronization Ready Interrupt Enable bit, which enables the BOD33 Synchronization Ready interrupt.

Downloaded from Arrow.com.

Value	Description
0	The BOD33 Synchronization Ready interrupt is disabled.
1	The BOD33 Synchronization Ready interrupt is enabled, and an interrupt request will be generated when the BOD33 Synchronization Ready Interrupt flag is set.

Bit 10 – BOD33DET BOD33 Detection Interrupt Enable
Writing a zero to this bit has no effect.
Writing a one to this bit will set the BOD33 Detection Interrupt Enable bit, which enables the BOD33 Detection interrupt.

Value	Description
0	The BOD33 Detection interrupt is disabled.
1	The BOD33 Detection interrupt is enabled, and an interrupt request will be generated when the BOD33 Detection Interrupt flag is set.

Bit 9 – BOD33RDY BOD33 Ready Interrupt Enable
Writing a zero to this bit has no effect.
Writing a one to this bit will set the BOD33 Ready Interrupt Enable bit, which enables the BOD33 Ready interrupt.

Value	Description
0	The BOD33 Ready interrupt is disabled.
1	The BOD33 Ready interrupt is enabled, and an interrupt request will be generated when the BOD33 Ready Interrupt flag is set.

Bit 8 – DFLLRCS DFLL Reference Clock Stopped Interrupt Enable
Writing a zero to this bit has no effect.
Writing a one to this bit will set the DFLL Reference Clock Stopped Interrupt Enable bit, which enables the DFLL Reference Clock Stopped interrupt.

Value	Description
0	The DFLL Reference Clock Stopped interrupt is disabled.
1	The DFLL Reference Clock Stopped interrupt is enabled, and an interrupt request will be generated when the DFLL Reference Clock Stopped Interrupt flag is set.

Bit 7 – DFLLLCKC DFLL Lock Coarse Interrupt Enable
Writing a zero to this bit has no effect.
Writing a one to this bit will set the DFLL Lock Coarse Interrupt Enable bit, which enables the DFLL Lock Coarse interrupt.

Value	Description
0	The DFLL Lock Coarse interrupt is disabled.
1	The DFLL Lock Coarse interrupt is enabled, and an interrupt request will be generated when the DFLL Lock Coarse Interrupt flag is set.

Bit 6 – DFLLLCKF DFLL Lock Fine Interrupt Enable
Writing a zero to this bit has no effect.
Writing a one to this bit will set the DFLL Lock Fine Interrupt Disable/Enable bit, disable the DFLL Lock Fine interrupt and set the corresponding interrupt request.

Value	Description
0	The DFLL Lock Fine interrupt is disabled.
1	The DFLL Lock Fine interrupt is enabled, and an interrupt request will be generated when the DFLL Lock Fine Interrupt flag is set.

Bit 5 – DFLLOOB DFLL Out Of Bounds Interrupt Enable
Writing a zero to this bit has no effect.
Writing a one to this bit will set the DFLL Out Of Bounds Interrupt Enable bit, which enables the DFLL Out Of Bounds interrupt.

Value	Description
0	The DFLL Out Of Bounds interrupt is disabled.
1	The DFLL Out Of Bounds interrupt is enabled, and an interrupt request will be generated when the DFLL Out Of Bounds Interrupt flag is set.

Downloaded from Arrow.com.

Bit 4 – DFLLRDY DFLL Ready Interrupt Enable
Writing a zero to this bit has no effect.
Writing a one to this bit will set the DFLL Ready Interrupt Enable bit, which enables the DFLL Ready interrupt and set the corresponding interrupt request.

Value	Description
0	The DFLL Ready interrupt is disabled.
1	The DFLL Ready interrupt is enabled, and an interrupt request will be generated when the DFLL Ready Interrupt flag is set.

Bit 3 – OSC8MRDY OSC8M Ready Interrupt Enable
Writing a zero to this bit has no effect.
Writing a one to this bit will set the OSC8M Ready Interrupt Enable bit, which enables the OSC8M Ready interrupt.

Value	Description
0	The OSC8M Ready interrupt is disabled.
1	The OSC8M Ready interrupt is enabled, and an interrupt request will be generated when the OSC8M Ready Interrupt flag is set.

Bit 2 – OSC32KRDY OSC32K Ready Interrupt Enable
Writing a zero to this bit has no effect.
Writing a one to this bit will set the OSC32K Ready Interrupt Enable bit, which enables the OSC32K Ready interrupt.

Value	Description
0	The OSC32K Ready interrupt is disabled.
1	The OSC32K Ready interrupt is enabled, and an interrupt request will be generated when the OSC32K Ready Interrupt flag is set.

Bit 1 – XOSC32KRDY XOSC32K Ready Interrupt Enable
Writing a zero to this bit has no effect.
Writing a one to this bit will set the XOSC32K Ready Interrupt Enable bit, which enables the XOSC32K Ready interrupt.

Value	Description
0	The XOSC32K Ready interrupt is disabled.
1	The XOSC32K Ready interrupt is enabled, and an interrupt request will be generated when the XOSC32K Ready Interrupt flag is set.

Bit 0 – XOSCRDY XOSC Ready Interrupt Enable
Writing a zero to this bit has no effect.
Writing a one to this bit will set the XOSC Ready Interrupt Enable bit, which enables the XOSC Ready interrupt.

Value	Description
0	The XOSC Ready interrupt is disabled.
1	The XOSC Ready interrupt is enabled, and an interrupt request will be generated when the XOSC Ready Interrupt flag is set.

Downloaded from Arrow.com.

17.8.3 Interrupt Flag Status and Clear

Name: INTFLAG
Offset: 0x08
Reset: 0x00000000
Property: -

Note: Depending on the fuse settings, various bits of the INTFLAG register can be set to one at startup. Therefore the user should clear those bits before using the corresponding interrupts.

Bit	31	30	29	28	27	26	25	24
Access	R	R	R	R	R	R	R	R
Reset	0	0	0	0	0	0	0	0

Bit	23	22	21	20	19	18	17	16
							DPLLLTO	DPLLLCKF
Access	R	R	R	R	R	R	R/W	R/W
Reset	0	0	0	0	0	0	0	0

Bit	15	14	13	12	11	10	9	8
	DPLLLCKR				B33SRDY	BOD33DET	BOD33RDY	DFLLRCS
Access	R/W	R	R	R	R/W	R/W	R/W	R/W
Reset	0	0	0	0	0	0	0	0

Bit	7	6	5	4	3	2	1	0
	DFLLLCKC	DFLLLCKF	DFLLOOB	DFLLRDY	OSC8MRDY	OSC32KRDY	XOSC32KRDY	XOSCRDY
Access	R/W	R/W	R/W	R/W	R/W	R/W	R/W	R/W
Reset	0	0	0	0	0	0	0	0

Bit 17 – DPLLLTO DPLL Lock Timeout
This flag is cleared by writing a one to it.
This flag is set on a zero-to-one transition of the DPLL Lock Timeout bit in the Status register (PCLKSR.DPLLLTO) and will generate an interrupt request if INTENSET.DPLLLTO is one.
Writing a zero to this bit has no effect.
Writing a one to this bit clears the DPLL Lock Timeout interrupt flag.

Bit 16 – DPLLLCKF DPLL Lock Fall
This flag is cleared by writing a one to it.
This flag is set on a zero-to-one transition of the DPLL Lock Fall bit in the Status register (PCLKSR.DPLLLCKF) and will generate an interrupt request if INTENSET.DPLLLCKF is one.
Writing a zero to this bit has no effect.
Writing a one to this bit clears the DPLL Lock Fall interrupt flag.

Bit 15 – DPLLLCKR DPLL Lock Rise
This flag is cleared by writing a one to it.
This flag is set on a zero-to-one transition of the DPLL Lock Rise bit in the Status register (PCLKSR.DPLLLCKR) and will generate an interrupt request if INTENSET.DPLLLCKR is one.
Writing a zero to this bit has no effect.
Writing a one to this bit clears the DPLL Lock Rise interrupt flag.

Bit 11 – B33SRDY BOD33 Synchronization Ready
This flag is cleared by writing a one to it.
This flag is set on a zero-to-one transition of the BOD33 Synchronization Ready bit in the Status register (PCLKSR.B33SRDY) and will generate an interrupt request if INTENSET.B33SRDY is one.
Writing a zero to this bit has no effect.
Writing a one to this bit clears the BOD33 Synchronization Ready interrupt flag

Downloaded from Arrow.com.

Bit 10 – BOD33DET BOD33 Detection
This flag is cleared by writing a one to it.
This flag is set on a zero-to-one transition of the BOD33 Detection bit in the Status register (PCLKSR.BOD33DET) and will generate an interrupt request if INTENSET.BOD33DET is one.
Writing a zero to this bit has no effect.
Writing a one to this bit clears the BOD33 Detection interrupt flag.

Bit 9 – BOD33RDY BOD33 Ready
This flag is cleared by writing a one to it.
This flag is set on a zero-to-one transition of the BOD33 Ready bit in the Status register (PCLKSR.BOD33RDY) and will generate an interrupt request if INTENSET.BOD33RDY is one.
Writing a zero to this bit has no effect.
Writing a one to this bit clears the BOD33 Ready interrupt flag.

Bit 8 – DFLLRCS DFLL Reference Clock Stopped
This flag is cleared by writing a one to it.
This flag is set on a zero-to-one transition of the DFLL Reference Clock Stopped bit in the Status register (PCLKSR.DFLLRCS) and will generate an interrupt request if INTENSET.DFLLRCS is one.
Writing a zero to this bit has no effect.
Writing a one to this bit clears the DFLL Reference Clock Stopped interrupt flag.

Bit 7 – DFLLLCKC DFLL Lock Coarse
This flag is cleared by writing a one to it.
This flag is set on a zero-to-one transition of the DFLL Lock Coarse bit in the Status register (PCLKSR.DFLLLCKC) and will generate an interrupt request if INTENSET.DFLLLCKC is one.
Writing a zero to this bit has no effect.
Writing a one to this bit clears the DFLL Lock Coarse interrupt flag.

Bit 6 – DFLLLCKF DFLL Lock Fine
This flag is cleared by writing a one to it.
This flag is set on a zero-to-one transition of the DFLL Lock Fine bit in the Status register (PCLKSR.DFLLLCKF) and will generate an interrupt request if INTENSET.DFLLLCKF is one.
Writing a zero to this bit has no effect.
Writing a one to this bit clears the DFLL Lock Fine interrupt flag.

Bit 5 – DFLLOOB DFLL Out Of Bounds
This flag is cleared by writing a one to it.
This flag is set on a zero-to-one transition of the DFLL Out Of Bounds bit in the Status register (PCLKSR.DFLLOOB) and will generate an interrupt request if INTENSET.DFLLOOB is one.
Writing a zero to this bit has no effect.
Writing a one to this bit clears the DFLL Out Of Bounds interrupt flag.

Bit 4 – DFLLRDY DFLL Ready
This flag is cleared by writing a one to it.
This flag is set on a zero-to-one transition of the DFLL Ready bit in the Status register (PCLKSR.DFLLRDY) and will generate an interrupt request if INTENSET.DFLLRDY is one.
Writing a zero to this bit has no effect.
Writing a one to this bit clears the DFLL Ready interrupt flag.

Bit 3 – OSC8MRDY OSC8M Ready
This flag is cleared by writing a one to it.
This flag is set on a zero-to-one transition of the OSC8M Ready bit in the Status register (PCLKSR.OSC8MRDY) and will generate an interrupt request if INTENSET.OSC8MRDY is one.
Writing a zero to this bit has no effect.
Writing a one to this bit clears the OSC8M Ready interrupt flag.

Bit 2 – OSC32KRDY OSC32K Ready
This flag is cleared by writing a one to it.

Downloaded from Arrow.com.

This flag is set on a zero-to-one transition of the OSC32K Ready bit in the Status register (PCLKSR.OSC32KRDY) and will generate an interrupt request if INTENSET.OSC32KRDY is one.
Writing a zero to this bit has no effect.
Writing a one to this bit clears the OSC32K Ready interrupt flag.

Bit 1 – XOSC32KRDY XOSC32K Ready
This flag is cleared by writing a one to it.
This flag is set on a zero-to-one transition of the XOSC32K Ready bit in the Status register (PCLKSR.XOSC32KRDY) and will generate an interrupt request if INTENSET.XOSC32KRDY is one.
Writing a zero to this bit has no effect.
Writing a one to this bit clears the XOSC32K Ready interrupt flag.

Bit 0 – XOSCRDY XOSC Ready
This flag is cleared by writing a one to it.
This flag is set on a zero-to-one transition of the XOSC Ready bit in the Status register (PCLKSR.XOSCRDY) and will generate an interrupt request if INTENSET.XOSCRDY is one.
Writing a zero to this bit has no effect.
Writing a one to this bit clears the XOSC Ready interrupt flag.

Downloaded from Arrow.com.

17.8.4 Power and Clocks Status

Name: PCLKSR
Offset: 0x0C
Reset: 0x00000000
Property: -

Bit	31	30	29	28	27	26	25	24
Access	R	R	R	R	R	R	R	R
Reset	0	0	0	0	0	0	0	0

Bit	23	22	21	20	19	18	17	16
							DPLLLTO	DPLLLCKF
Access	R	R	R	R	R	R	R	R
Reset	0	0	0	0	0	0	0	0

Bit	15	14	13	12	11	10	9	8
	DPLLLCKR				B33SRDY	BOD33DET	BOD33RDY	DFLLRCS
Access	R	R	R	R	R	R	R	R
Reset	0	0	0	0	0	0	0	0

Bit	7	6	5	4	3	2	1	0
	DFLLLCKC	DFLLLCKF	DFLLOOB	DFLLRDY	OSC8MRDY	OSC32KRDY	XOSC32KRDY	XOSCRDY
Access	R	R	R	R	R	R	R	R
Reset	0	0	0	0	0	0	0	0

Bit 17 – DPLLLTO DPLL Lock Time-out

Value	Description
0	DPLL Lock time-out not detected
1	DPLL Lock time-out detected

Bit 16 – DPLLLCKF DPLL Lock Fall

Value	Description
0	DPLL Lock fall edge not detected
1	DPLL Lock fall edge detected

Bit 15 – DPLLLCKR DPLL Lock Rise

Value	Description
0	DPLL Lock rise edge not detected
1	DPLL Lock fall edge detected

Bit 11 – B33SRDY BOD33 Synchronization Ready

Value	Description
0	BOD33 synchronization is complete
1	BOD33 synchronization is ongoing

Bit 10 – BOD33DET BOD33 Detection

Value	Description
0	No BOD33 detection
1	BOD33 has detected that the I/O power supply is going below the BOD33 reference value

Bit 9 – BOD33RDY BOD33 Ready

Value	Description
0	BOD33 is not ready

Downloaded from Arrow.com.

Value	Description
1	BOD33 is ready

Bit 8 – DFLLRCS DFLL Reference Clock Stopped

Value	Description
0	DFLL reference clock is running
1	DFLL reference clock has stopped

Bit 7 – DFLLLCKC DFLL Lock Coarse

Value	Description
0	No DFLL coarse lock detected
1	DFLL coarse lock detected

Bit 6 – DFLLLCKF DFLL Lock Fine

Value	Description
0	No DFLL fine lock detected
1	DFLL fine lock detected

Bit 5 – DFLLOOB DFLL Out Of Bounds

Value	Description
0	No DFLL Out Of Bounds detected
1	DFLL Out Of Bounds detected

Bit 4 – DFLLRDY DFLL Ready

Value	Description
0	The synchronization is ongoing
1	The synchronization is complete

Bit 3 – OSC8MRDY OSC8M Ready

Value	Description
0	OSC8M is not ready
1	OSC8M is stable and ready to be used as a clock source

Bit 2 – OSC32KRDY OSC32K Ready

Value	Description
0	OSC32K is not ready
1	OSC32K is stable and ready to be used as a clock source

Bit 1 – XOSC32KRDY XOSC32K Ready

Value	Description
0	XOSC32K is not ready
1	XOSC32K is stable and ready to be used as a clock source

Bit 0 – XOSCRDY XOSC Ready

Value	Description
0	XOSC is not ready
1	XOSC is stable and ready to be used as a clock source

Downloaded from Arrow.com.

17.8.5 External Multipurpose Crystal Oscillator (XOSC) Control

Name: XOSC
Offset: 0x10
Reset: 0x0080
Property: Write-Protected

Bit	15	14	13	12	11	10	9	8
	STARTUP[3:0]				AMPGC	GAIN[2:0]		
Access	R/W	R/W	R/W	R/W	R/W	R/W	R/W	R/W
Reset	0	0	0	0	0	0	0	0

Bit	7	6	5	4	3	2	1	0
	ONDEMAND	RUNSTDBY				XTALEN	ENABLE	
Access	R/W	R/W				R/W	R/W	
Reset	1	0				0	0	

Bits 15:12 – STARTUP[3:0] Start-Up Time
These bits select start-up time for the oscillator according to the table below.
The OSCULP32K oscillator is used to clock the start-up counter.

STARTUP[3:0]	Number of OSCULP32K Clock Cycles	Number of XOSC Clock Cycles	Approximate Equivalent Time(1)(2)(3)
0x0	1	3	31 µs
0x1	2	3	61 µs
0x2	4	3	122 µs
0x3	8	3	244 µs
0x4	16	3	488 µs
0x5	32	3	977 µs
0x6	64	3	1953 µs
0x7	128	3	3906 µs
0x8	256	3	7813 µs
0x9	512	3	15625 µs
0xA	1024	3	31250 µs
0xB	2048	3	62500 µs
0xC	4096	3	125000 µs
0xD	8192	3	250000 µs
0xE	16384	3	500000 µs
0xF	32768	3	1000000 µs

Notes:
1. Number of cycles for the start-up counter
2. Number of cycles for the synchronization delay, before PCLKSR.XOSCRDY is set.
3. Actual start-up time is n OSCULP32K cycles + 3 XOSC cycles, but given the time neglects the three XOSC cycles.

Bit 11 – AMPGC Automatic Amplitude Gain Control
Note: The configuration of the oscillator gain is mandatory even if AMPGC feature is enabled at startup.

Value	Description
0	The automatic amplitude gain control is disabled
1	The automatic amplitude gain control is enabled. Amplitude gain will be automatically adjusted during Crystal Oscillator operation.

Downloaded from Arrow.com.

Bits 10:8 – GAIN[2:0] Oscillator Gain
These bits select the gain for the oscillator. The listed maximum frequencies are recommendations, and might vary based on capacitive load and crystal characteristics. These bits must be properly configured even when the Automatic Amplitude Gain Control is active.

GAIN[2:0]	Recommended Max Frequency
0x0	2 MHz
0x1	4 MHz
0x2	8 MHz
0x3	16 MHz
0x4	30 MHz
0x5-0x7	Reserved

Bit 7 – ONDEMAND On Demand Control
The On Demand operation mode allows an oscillator to be enabled or disabled, depending on peripheral clock requests.
In On Demand operation mode (i.e., if the XOSC.ONDEMAND bit has been previously written to one), the oscillator will be running only when requested by a peripheral. If there is no peripheral requesting the oscillator s clock source, the oscillator will be in a disabled state.
If On Demand is disabled, the oscillator will always be running when enabled.
In Standby Sleep mode, the On Demand operation is still active if the XOSC.RUNSTDBY bit is one. If XOSC.RUNSTDBY is zero, the oscillator is disabled.

Value	Description
0	The oscillator is always on, if enabled
1	The oscillator is enabled when a peripheral is requesting the oscillator to be used as a clock source. The oscillator is disabled if no peripheral is requesting the clock source.

Bit 6 – RUNSTDBY Run in Standby
This bit controls how the XOSC behaves during Standby Sleep mode:

Value	Description
0	The oscillator is disabled in Standby Sleep mode.
1	The oscillator is not stopped in Standby Sleep mode. If XOSC.ONDEMAND is one, the clock source will be running when a peripheral is requesting the clock. If XOSC.ONDEMAND is zero, the clock source will always be running in Standby Sleep mode.

Bit 2 – XTALEN Crystal Oscillator Enable
This bit controls the connections between the I/O pads and the external clock or crystal oscillator:

Value	Description
0	External clock connected on XIN. XOUT can be used as general purpose I/O.
1	Crystal connected to XIN/XOUT

Bit 1 – ENABLE Oscillator Enable

Value	Description
0	The oscillator is disabled
1	The oscillator is enabled

Downloaded from Arrow.com.

17.8.6 32kHz External Crystal Oscillator (XOSC32K) Control

Name: XOSC32K
Offset: 0x14
Reset: 0x0080
Property: Write-Protected

Bit	15	14	13	12	11	10	9	8
				WRTLOCK		STARTUP[2:0]		
Access				R/W		R/W	R/W	R/W
Reset				0		0	0	0

Bit	7	6	5	4	3	2	1	0
	ONDEMAND	RUNSTDBY	AAMPEN		EN32K	XTALEN	ENABLE	
Access	R/W	R/W	R/W		R/W	R/W	R/W	
Reset	1	0	0		0	0	0	

Bit 12 – WRTLOCK Write Lock
This bit locks the XOSC32K register for future writes to fix the XOSC32K configuration.

Value	Description
0	The XOSC32K configuration is not locked.
1	The XOSC32K configuration is locked.

Bits 10:8 – STARTUP[2:0] Oscillator Start-Up Time
These bits select the start-up time for the oscillator.
The OSCULP32K oscillator is used to clock the start-up counter.

Table 17-6. Start-Up Time for 32kHz External Crystal Oscillator

STARTUP[2:0]	Number of OSCULP32K Clock Cycles	Number of XOSC32K Clock Cycles	Approximate Equivalent Time (OSCULP = 32kHz)(1)(2)(3)
0x0	1	3	122µs
0x1	32	3	1068µs
0x2	2048	3	62592µs
0x3	4096	3	125092µs
0x4	16384	3	500092µs
0x5	32768	3	1000092µs
0x6	65536	3	2000092µs
0x7	131072	3	4000092µs

Notes: 1. Number of cycles for the start-up counter.
2. Number of cycles for the synchronization delay, before PCLKSR.XOSC32KRDY is set.
3. Start-up time is n OSCULP32K cycles + 3 XOSC32K cycles.

Bit 7 – ONDEMAND On Demand Control
The On Demand operation mode allows an oscillator to be enabled or disabled depending on peripheral clock requests.
In On Demand operation mode, i.e., if the ONDEMAND bit has been previously written to one, the oscillator will only be running when requested by a peripheral. If there is no peripheral requesting the oscillator s clock source, the oscillator will be in a disabled state.
If On Demand is disabled the oscillator will always be running when enabled.
In standby sleep mode, the On Demand operation is still active if the XOSC32K.RUNSTDBY bit is one. If XOSC32K.RUNSTDBY is zero, the oscillator is disabled.

Value	Description
0	The oscillator is always on, if enabled.
1	The oscillator is enabled when a peripheral is requesting the oscillator to be used as a clock source. The oscillator is disabled if no peripheral is requesting the clock source.

Downloaded from Arrow.com.

Bit 6 – RUNSTDBY Run in Standby
This bit controls how the XOSC32K behaves during standby sleep mode:

Value	Description
0	The oscillator is disabled in standby sleep mode.
1	The oscillator is not stopped in standby sleep mode. If XOSC32K.ONDEMAND is one, the clock source will be running when a peripheral is requesting the clock. If XOSC32K.ONDEMAND is zero, the clock source will always be running in standby sleep mode.

Bit 5 – AAMPEN Automatic Amplitude Control Enable

Value	Description
0	The automatic amplitude control for the crystal oscillator is disabled.
1	The automatic amplitude control for the crystal oscillator is enabled.

Bit 3 – EN32K 32kHz Output Enable

Value	Description
0	The 32kHz output is disabled.
1	The 32kHz output is enabled.

Bit 2 – XTALEN Crystal Oscillator Enable
This bit controls the connections between the I/O pads and the external clock or crystal oscillator:

Value	Description
0	External clock connected on XIN32. XOUT32 can be used as general-purpose I/O.
1	Crystal connected to XIN32/XOUT32.

Bit 1 – ENABLE Oscillator Enable

Value	Description
0	The oscillator is disabled.
1	The oscillator is enabled.

Downloaded from Arrow.com.

17.8.7 32kHz Internal Oscillator (OSC32K) Control

Name: OSC32K
Offset: 0x18
Reset: 0x003F0080
Property: Write-Protected

Bit	31	30	29	28	27	26	25	24
Access								
Reset								

Bit	23	22	21	20	19	18	17	16
		CALIB[6:0]						
Access		R/W	R/W	R/W	R/W	R/W	R/W	R/W
Reset		0	1	1	1	1	1	1

Bit	15	14	13	12	11	10	9	8
				WRTLOCK		STARTUP[2:0]		
Access				R/W		R/W	R/W	R/W
Reset				0		0	0	0

Bit	7	6	5	4	3	2	1	0
	ONDEMAND	RUNSTDBY				EN32K	ENABLE	
Access	R/W	R/W				R/W	R/W	
Reset	1	0				0	0	

Bits 22:16 – CALIB[6:0] Oscillator Calibration
These bits control the oscillator calibration.
This value must be written by the user.
Factory calibration values can be loaded from the non-volatile memory.

Bit 12 – WRTLOCK Write Lock
This bit locks the OSC32K register for future writes to fix the OSC32K configuration.

Value	Description
0	The OSC32K configuration is not locked.
1	The OSC32K configuration is locked.

Bits 10:8 – STARTUP[2:0] Oscillator Start-Up Time
These bits select start-up time for the oscillator.
The OSCULP32K oscillator is used as input clock to the startup counter.

Table 17-7. Start-Up Time for 32kHz Internal Oscillator

STARTUP[2:0]	Number of OSC32K clock cycles	Approximate Equivalent Time (OSCULP= 32 kHz)(1)(2)(3)
0x0	3	92µs
0x1	4	122µs
0x2	6	183µs
0x3	10	305µs
0x4	18	549µs
0x5	34	1038µs
0x6	66	2014µs
0x7	130	3967µs

Notes: 1. Number of cycles for the start-up counter.

Downloaded from Arrow.com.

2. Number of cycles for the synchronization delay, before PCLKSR.OSC32KRDY is set.
3. Start-up time is n OSC32K cycles + 2 OSC32K cycles.

Bit 7 – ONDEMAND On Demand Control
The On Demand operation mode allows an oscillator to be enabled or disabled depending on peripheral clock requests.
In On Demand operation mode, that is, if the ONDEMAND bit has been previously written to one, the oscillator will only be running when requested by a peripheral. If there is no peripheral requesting the oscillator s clock source, the oscillator will be in a disabled state.
If On Demand is disabled the oscillator will always be running when enabled.
In standby sleep mode, the On Demand operation is still active if the OSC32K.RUNSTDBY bit is one. If OSC32K.RUNSTDBY is zero, the oscillator is disabled.

Value	Description
0	The oscillator is always on, if enabled.
1	The oscillator is enabled when a peripheral is requesting the oscillator to be used as a clock source. The oscillator is disabled if no peripheral is requesting the clock source.

Bit 6 – RUNSTDBY Run in Standby
This bit controls how the OSC32K behaves during Standby Sleep mode:

Value	Description
0	The oscillator is disabled in standby sleep mode.
1	The oscillator is not stopped in standby sleep mode. If OSC32K.ONDEMAND is one, the clock source will be running when a peripheral is requesting the clock. If OSC32K.ONDEMAND is zero, the clock source will always be running in standby sleep mode.

Bit 2 – EN32K 32 kHz Output Enable

Value	Description
0	The 32 kHz output is disabled.
1	The 32 kHz output is enabled.

Bit 1 – ENABLE Oscillator Enable

Value	Description
0	The oscillator is disabled.
1	The oscillator is enabled.

Downloaded from Arrow.com.

17.8.8 32kHz Ultra Low Power Internal Oscillator (OSCULP32K) Control

Name: OSCULP32K
Offset: 0x1C
Reset: 0xXX
Property: Write-Protected

Bit	7	6	5	4	3	2	1	0
	WRTLOCK			CALIB[4:0]				
Access	R/W			R/W	R/W	R/W	R/W	R/W
Reset	0			x	x	x	x	x

Bit 7 – WRTLOCK Write Lock
This bit locks the OSCULP32K register for future writes to fix the OSCULP32K configuration.

Value	Description
0	The OSCULP32K configuration is not locked.
1	The OSCULP32K configuration is locked.

Bits 4:0 – CALIB[4:0] Oscillator Calibration
These bits control the oscillator calibration.
These bits are loaded from Flash Calibration at startup.

Downloaded from Arrow.com.

17.8.9 8MHz Internal Oscillator (OSC8M) Control

Name: OSC8M
Offset: 0x20
Reset: 0xXXXX0382
Property: Write-Protected

Bit	31	30	29	28	27	26	25	24
	FRANGE[1:0]				CALIB[11:8]			
Access	R/W	R/W			R/W	R/W	R/W	R/W
Reset	x	x			0	0	0	0

Bit	23	22	21	20	19	18	17	16
	CALIB[7:0]							
Access	R/W	R/W	R/W	R/W	R/W	R/W	R/W	R/W
Reset	0	0	0	0	0	0	0	x

Bit	15	14	13	12	11	10	9	8
							PRESC[1:0]	
Access							R/W	R/W
Reset							1	1

Bit	7	6	5	4	3	2	1	0
	ONDEMAND	RUNSTDBY					ENABLE	
Access	R/W	R/W					R/W	
Reset	1	0					1	

Bits 31:30 – FRANGE[1:0] Oscillator Frequency Range
These bits control the oscillator frequency range according to the table below. These bits are loaded from Flash Calibration at startup.

FRANGE[1:0]	Description
0x0	4 to 6MHz
0x1	6 to 8MHz
0x2	8 to 11MHz
0x3	11 to 15MHz

Bits 27:16 – CALIB[11:0] Oscillator Calibration
These bits control the oscillator calibration. The calibration field is split in two:
CALIB[11:6] is for temperature calibration
CALIB[5:0] is for overall process calibration
These bits are loaded from Flash Calibration at startup.

Bits 9:8 – PRESC[1:0] Oscillator Prescaler
These bits select the oscillator prescaler factor setting according to the table below.

PRESC[1:0]	Description
0x0	1
0x1	2
0x2	4
0x3	8

Bit 7 – ONDEMAND On Demand Control
The On Demand operation mode allows an oscillator to be enabled or disabled depending on peripheral clock requests.

Downloaded from Arrow.com.

In On Demand operation mode, i.e., if the ONDEMAND bit has been previously written to one, the oscillator will only be running when requested by a peripheral. If there is no peripheral requesting the oscillator's clock source, the oscillator will be in a disabled state.
If On Demand is disabled the oscillator will always be running when enabled.
In standby sleep mode, the On Demand operation is still active if the OSC8M.RUNSTDBY bit is one. If OSC8M.RUNSTDBY is zero, the oscillator is disabled.

Value	Description
0	The oscillator is always on, if enabled.
1	The oscillator is enabled when a peripheral is requesting the oscillator to be used as a clock source. The oscillator is disabled if no peripheral is requesting the clock source.

Bit 6 – RUNSTDBY Run in Standby
This bit controls how the OSC8M behaves during standby sleep mode:

Value	Description
0	The oscillator is disabled in standby sleep mode.
1	The oscillator is not stopped in standby sleep mode. If OSC8M.ONDEMAND is one, the clock source will be running when a peripheral is requesting the clock. If OSC8M.ONDEMAND is zero, the clock source will always be running in standby sleep mode.

Bit 1 – ENABLE Oscillator Enable
The user must ensure that the OSC8M is fully disabled before enabling it, and that the OSC8M is fully enabled before disabling it by reading OSC8M.ENABLE.

Value	Description
0	The oscillator is disabled or being enabled.
1	The oscillator is enabled or being disabled.

Downloaded from Arrow.com.

17.8.10 DFLL48M Control

Name: DFLLCTRL
Offset: 0x24
Reset: 0x0080
Property: Write-Protected, Write-Synchronized

Bit	15	14	13	12	11	10	9	8
					WAITLOCK	BPLCKC	QLDIS	CCDIS
Access					R/W	R/W	R/W	R/W
Reset					0	0	0	0

Bit	7	6	5	4	3	2	1	0
	ONDEMAND		USBCRM	LLAW	STABLE	MODE	ENABLE	
Access	R/W		R/W	R/W	R/W	R/W	R/W	
Reset	1		0	0	0	0	0	

Bit 11 – WAITLOCK Wait Lock
This bit controls the DFLL output clock, depending on lock status:

Value	Description
0	Output clock before the DFLL is locked
1	Output clock when DFLL is locked

Bit 10 – BPLCKC Bypass Coarse Lock
This bit controls the coarse lock procedure:

Value	Description
0	Bypass coarse lock is disabled
1	Bypass coarse lock is enabled

Bit 9 – QLDIS Quick Lock Disable

Value	Description
0	Quick Lock is enabled
1	Quick Lock is disabled

Bit 8 – CCDIS Chill Cycle Disable

Value	Description
0	Chill Cycle is enabled
1	Chill Cycle is disabled

Bit 7 – ONDEMAND On Demand Control
The On Demand operation mode allows an oscillator to be enabled or disabled depending on peripheral clock requests.
In On Demand operation mode (i.e., if the ONDEMAND bit has been previously written to one), the oscillator will only be running when requested by a peripheral. If there is no peripheral requesting the oscillator s clock source, the oscillator will be in a disabled state.
If On Demand is disabled the oscillator will always be running when enabled.
In Standby Sleep mode, the On Demand operation is still active if the DFLLCTRL.RUNSTDBY bit is one. If DFLLCTRL.RUNSTDBY is zero, the oscillator is disabled.

Value	Description
0	The oscillator is always on, if enabled
1	The oscillator is enabled when a peripheral is requesting the oscillator to be used as a clock source. The oscillator is disabled if no peripheral is requesting the clock source.

Bit 5 – USBCRM USB Clock Recovery Mode

Value	Description
0	USB Clock Recovery mode is disabled

Downloaded from Arrow.com.

Value	Description
1	USB Clock Recovery mode is enabled

Bit 4 – LLAW Lose Lock After Wake

Value	Description
0	Locks will not be lost after waking up from Sleep modes if the DFLL clock has been stopped
1	Locks will be lost after waking up from Sleep modes if the DFLL clock has been stopped

Bit 3 – STABLE Stable DFLL Frequency

Value	Description
0	FINE calibration tracks changes in output frequency
1	FINE calibration register value will be fixed after a fine lock

Bit 2 – MODE Operating Mode Selection

Value	Description
0	The DFLL operates in open-loop operation
1	The DFLL operates in closed-loop operation

Bit 1 – ENABLE DFLL Enable
Due to synchronization, there is a delay from updating the register until the peripheral is enabled/disabled. The value written to DFLLCTRL.ENABLE will read back immediately after written.

Value	Description
0	The DFLL oscillator is disabled
1	The DFLL oscillator is enabled

Downloaded from Arrow.com.

17.8.11 DFLL48M Value

Name: DFLLVAL
Offset: 0x28
Reset: 0x00000000
Property: Read-Synchronized, Write-Protected

Bit	31	30	29	28	27	26	25	24
	DIFF[15:8]							
Access	R	R	R	R	R	R	R	R
Reset	0	0	0	0	0	0	0	0

Bit	23	22	21	20	19	18	17	16
	DIFF[7:0]							
Access	R	R	R	R	R	R	R	R
Reset	0	0	0	0	0	0	0	0

Bit	15	14	13	12	11	10	9	8
	COARSE[5:0]						FINE[9:8]	
Access	R/W	R/W	R/W	R/W	R/W	R/W	R/W	R/W
Reset	0	0	0	0	0	0	0	0

Bit	7	6	5	4	3	2	1	0
	FINE[7:0]							
Access	R/W	R/W	R/W	R/W	R/W	R/W	R/W	R/W
Reset	0	0	0	0	0	0	0	0

Bits 31:16 – DIFF[15:0] Multiplication Ratio Difference
In closed-loop mode (DFLLCTRL.MODE is written to one), this bit group indicates the difference between the ideal number of DFLL cycles and the counted number of cycles. This value is not updated in open-loop mode, and should be considered invalid in that case.

Bits 15:10 – COARSE[5:0] Coarse Value
Set the value of the Coarse Calibration register. In closed-loop mode, this field is read-only.

Bits 9:0 – FINE[9:0] Fine Value
Set the value of the Fine Calibration register. In closed-loop mode, this field is read-only.

Downloaded from Arrow.com.

17.8.12 DFLL48M Multiplier

Name: DFLLMUL
Offset: 0x2C
Reset: 0x00000000
Property: Write-Protected

Bit	31	30	29	28	27	26	25	24
	CSTEP[5:0]						FSTEP[9:8]	
Access	R/W	R/W	R/W	R/W	R/W	R/W	R/W	R/W
Reset	0	0	0	0	0	0	0	0

Bit	23	22	21	20	19	18	17	16
	FSTEP[7:0]							
Access	R/W	R/W	R/W	R/W	R/W	R/W	R/W	R/W
Reset	0	0	0	0	0	0	0	0

Bit	15	14	13	12	11	10	9	8
	MUL[15:8]							
Access	R/W	R/W	R/W	R/W	R/W	R/W	R/W	R/W
Reset	0	0	0	0	0	0	0	0

Bit	7	6	5	4	3	2	1	0
	MUL[7:0]							
Access	R/W	R/W	R/W	R/W	R/W	R/W	R/W	R/W
Reset	0	0	0	0	0	0	0	0

Bits 31:26 – CSTEP[5:0] Coarse Maximum Step
This bit group indicates the maximum step size allowed during coarse adjustment in closed-loop mode. When adjusting to a new frequency, the expected output frequency overshoot depends on this step size.

Bits 25:16 – FSTEP[9:0] Fine Maximum Step
This bit group indicates the maximum step size allowed during fine adjustment in closed-loop mode. When adjusting to a new frequency, the expected output frequency overshoot depends on this step size.

Bits 15:0 – MUL[15:0] DFLL Multiply Factor
This field determines the ratio of the CLK_DFLL output frequency to the CLK_DFLL_REF input frequency. Writing to the MUL bits will cause locks to be lost and the fine calibration value to be reset to its midpoint.

Downloaded from Arrow.com.

17.8.13 DFLL48M Synchronization

Name: DFLLSYNC
Offset: 0x30
Reset: 0x00
Property: Write-Protected

Bit	7	6	5	4	3	2	1	0
	READREQ							
Access	W							
Reset	0							

Bit 7 – READREQ Read Request
To be able to read the current value of DFLLVAL in closed-loop mode, this bit should be written to one. The updated value is available in DFLLVAL when PCLKSR.DFLLRDY is set.

Downloaded from Arrow.com.

17.8.14 3.3V Brown-Out Detector (BOD33) Control

Name: BOD33
Offset: 0x34
Reset: 0x00XX00XX
Property: Write-Protected, Write-Synchronized

Bit	31	30	29	28	27	26	25	24
Access								
Reset								

Bit	23	22	21	20	19	18	17	16
			LEVEL[5:0]					
Access			R/W	R/W	R/W	R/W	R/W	R/W
Reset			x	x	x	x	x	x

Bit	15	14	13	12	11	10	9	8
	PSEL[3:0]						CEN	MODE
Access	R/W	R/W	R/W	R/W			R/W	R/W
Reset	0	0	0	0			0	0

Bit	7	6	5	4	3	2	1	0
		RUNSTDBY		ACTION[1:0]		HYST	ENABLE	
Access		R/W		R/W	R/W	R/W	R/W	
Reset		0		x	x	x	x	

Bits 21:16 – LEVEL[5:0] BOD33 Threshold Level
This field sets the triggering voltage threshold for the BOD33. See the *Electrical Characteristics* for actual voltage levels. Note that any change to the LEVEL field of the BOD33 register should be done when the BOD33 is disabled in order to avoid spurious resets or interrupts.
These bits are loaded from Flash User Row at start-up. Refer to *NVM User Row Mapping* for more details.

Bits 15:12 – PSEL[3:0] Prescaler Select
Selects the prescaler divide-by output for the BOD33 sampling mode according to the table below. The input clock comes from the OSCULP32K 1kHz output.

PSEL[3:0]	Name	Description
0x0	DIV2	Divide clock by 2
0x1	DIV4	Divide clock by 4
0x2	DIV8	Divide clock by 8
0x3	DIV16	Divide clock by 16
0x4	DIV32	Divide clock by 32
0x5	DIV64	Divide clock by 64
0x6	DIV128	Divide clock by 128
0x7	DIV256	Divide clock by 256
0x8	DIV512	Divide clock by 512
0x9	DIV1K	Divide clock by 1024
0xA	DIV2K	Divide clock by 2048
0xB	DIV4K	Divide clock by 4096
0xC	DIV8K	Divide clock by 8192
0xD	DIV16K	Divide clock by 16384
0xE	DIV32K	Divide clock by 32768
0xF	DIV64K	Divide clock by 65536

Downloaded from Arrow.com.

Bit 9 – CEN Clock Enable
Writing a zero to this bit will stop the BOD33 sampling clock.
Writing a one to this bit will start the BOD33 sampling clock.

Value	Description
0	The BOD33 sampling clock is either disabled and stopped, or enabled but not yet stable.
1	The BOD33 sampling clock is either enabled and stable, or disabled but not yet stopped.

Bit 8 – MODE Operation Mode

Value	Description
0	The BOD33 operates in continuous mode.
1	The BOD33 operates in sampling mode.

Bit 6 – RUNSTDBY Run in Standby

Value	Description
0	The BOD33 is disabled in standby sleep mode.
1	The BOD33 is enabled in standby sleep mode.

Bits 4:3 – ACTION[1:0] BOD33 Action
These bits are used to select the BOD33 action when the supply voltage crosses below the BOD33 threshold.
These bits are loaded from Flash User Row at start-up.

ACTION[1:0]	Name	Description
0x0	NONE	No action
0x1	RESET	The BOD33 generates a reset
0x2	INTERRUPT	The BOD33 generates an interrupt
0x3		Reserved

Bit 2 – HYST Hysteresis
This bit indicates whether hysteresis is enabled for the BOD33 threshold voltage:
This bit is loaded from Flash User Row at start-up. Refer to *NVM User Row Mapping* for more details.

Value	Description
0	No hysteresis.
1	Hysteresis enabled.

Bit 1 – ENABLE Enable
This bit is loaded from Flash User Row at startup. Refer to *NVM User Row Mapping* for more details.

Value	Description
0	BOD33 is disabled.
1	BOD33 is enabled.

Related Links
37. Electrical Characteristics at 85°C
10.3.1 NVM User Row Mapping

Downloaded from Arrow.com.

17.8.15 Voltage Regulator System (VREG) Control

Name: VREG
Offset: 0x3C
Reset: 0x0X02
Property: Write-Protected

Bit	15	14	13	12	11	10	9	8
			FORCELDO					
Access			R/W					
Reset			0					

Bit	7	6	5	4	3	2	1	0
		RUNSTDBY					ENABLE	
Access		R/W					R/W	
Reset		0					1	

Bit 13 – FORCELDO Force LDO Voltage Regulator

Value	Description
0	The voltage regulator is in low-power and low-drive configuration in Standby Sleep mode
1	The voltage regulator is in low-power and high-drive configuration in Standby Sleep mode

Bit 6 – RUNSTDBY Run in Standby

Value	Description
0	The voltage regulator is in low-power configuration in Standby Sleep mode
1	The voltage regulator is in normal configuration in Standby Sleep mode

Bit 1 – ENABLE
Must be set to 1.

Downloaded from Arrow.com.

17.8.16 Voltage References System (VREF) Control

Name: VREF
Offset: 0x40
Reset: 0x0XXX0000
Property: Write-Protected

Bit	31	30	29	28	27	26	25	24
						CALIB[10:8]		
Access						R/W	R/W	R/W
Reset						x	x	x

Bit	23	22	21	20	19	18	17	16
	CALIB[7:0]							
Access	R/W	R/W	R/W	R/W	R/W	R/W	R/W	R/W
Reset	x	x	x	x	x	x	x	x

Bit	15	14	13	12	11	10	9	8
Access								
Reset								

Bit	7	6	5	4	3	2	1	0
						BGOUTEN	TSEN	
Access						R/W	R/W	
Reset						0	0	

Bits 26:16 – CALIB[10:0] Bandgap Voltage Generator Calibration
These bits are used to calibrate the output level of the bandgap voltage reference. These bits are loaded from Flash Calibration Row at start-up.

Bit 2 – BGOUTEN Bandgap Output Enable

Value	Description
0	The bandgap output is not available as an ADC input channel
1	The bandgap output is routed to an ADC input channel

Bit 1 – TSEN Temperature Sensor Enable(1)

Value	Description
0	Temperature sensor is disabled
1	Temperature sensor is enabled and routed to an ADC input channel **Note:** 1. The TSEN bit is not available on the DA1 device.

Downloaded from Arrow.com.

17.8.17 DPLL Control A

Name: DPLLCTRLA
Offset: 0x44
Reset: 0x80
Property: Write-Protected

Bit	7	6	5	4	3	2	1	0
	ONDEMAND	RUNSTDBY					ENABLE	
Access	R/W	R/W					R/W	
Reset	1	0					0	

Bit 7 – ONDEMAND On Demand Clock Activation

Value	Description
0	The DPLL is always on when enabled.
1	The DPLL is activated only when a peripheral request the DPLL as a source clock. The DPLLCTRLA.ENABLE bit must be one to validate that operation, otherwise the peripheral request has no effect.

Bit 6 – RUNSTDBY Run in Standby

Value	Description
0	The DPLL is disabled in standby sleep mode.
1	The DPLL is not stopped in standby sleep mode.

Bit 1 – ENABLE DPLL Enable
The software operation of enabling or disabling the DPLL takes a few clock cycles, so check the DPLLSTATUS.ENABLE status bit to identify when the DPLL is successfully activated or disabled.

Value	Description
0	The DPLL is disabled.
1	The DPLL is enabled.

Downloaded from Arrow.com.

17.8.18 DPLL Ratio Control

Name: DPLLRATIO
Offset: 0x48
Reset: 0x00000000
Property: Write-Protected

Bit	31	30	29	28	27	26	25	24
Access								
Reset								

Bit	23	22	21	20	19	18	17	16
					LDRFRAC[3:0]			
Access					R/W	R/W	R/W	R/W
Reset					0	0	0	0

Bit	15	14	13	12	11	10	9	8
					LDR[11:8]			
Access					R/W	R/W	R/W	R/W
Reset					0	0	0	0

Bit	7	6	5	4	3	2	1	0
	LDR[7:0]							
Access	R/W	R/W	R/W	R/W	R/W	R/W	R/W	R/W
Reset	0	0	0	0	0	0	0	0

Bits 19:16 – LDRFRAC[3:0] Loop Divider Ratio Fractional Part
Write this field with the fractional part of the frequency multiplier.

Bits 11:0 – LDR[11:0] Loop Divider Ratio
Write this field with the integer part of the frequency multiplier.

Downloaded from Arrow.com.

17.8.19 DPLL Control B

Name: DPLLCTRLB
Offset: 0x4C
Reset: 0x00000000
Property: Write-Protected

Bit	31	30	29	28	27	26	25	24
						DIV[10:8]		
Access						R/W	R/W	R/W
Reset						0	0	0

Bit	23	22	21	20	19	18	17	16
	DIV[7:0]							
Access	R/W	R/W	R/W	R/W	R/W	R/W	R/W	R/W
Reset	0	0	0	0	0	0	0	0

Bit	15	14	13	12	11	10	9	8
				LBYPASS		LTIME[2:0]		
Access				R/W		R/W	R/W	R/W
Reset				0		0	0	0

Bit	7	6	5	4	3	2	1	0
			REFCLK[1:0]		WUF	LPEN	FILTER[1:0]	
Access			R/W	R/W	R/W	R/W	R/W	R/W
Reset			0	0	0	0	0	0

Bits 26:16 – DIV[10:0] Clock Divider
These bits are used to set the XOSC clock source division factor. Refer to 17.6.8.3 Principle of Operation.

Bit 12 – LBYPASS Lock Bypass

Value	Description
0	Normal Mode: the CLK_FDPLL96M is turned off when lock signal is low.
1	Lock Bypass Mode: the CLK_FDPLL96M is always running, lock is irrelevant.

Bits 10:8 – LTIME[2:0] Lock Time
These bits select Lock Timeout.

LTIME[2:0]	Name	Description
0x0	DEFAULT	No time-out
0x1-0x3		Reserved
0x4	8MS	Time-out if no lock within 8 ms
0x5	9MS	Time-out if no lock within 9 ms
0x6	10MS	Time-out if no lock within 10 ms
0x7	11MS	Time-out if no lock within 11 ms

Bits 5:4 – REFCLK[1:0] Reference Clock Selection
These bits select the CLK_FDPLL96M_REF source.

REFCLK[1:0]	Name	Description
0x0	XOSC32	XOSC32 clock reference
0x1	XOSC	XOSC clock reference
0x2	GCLK_DPLL	GCLK_DPLL clock reference
0x3		Reserved

Downloaded from Arrow.com.

Bit 3 – WUF Wake Up Fast

Value	Description
0	DPLL CK output is gated until complete startup time and lock time.
1	DPLL CK output is gated until startup time only.

Bit 2 – LPEN Low-Power Enable

Value	Description
0	The time to digital converter is selected.
1	The time to digital converter is not selected, this will improve power consumption but increase the output jitter.

Bits 1:0 – FILTER[1:0] Proportional Integral Filter Selection
These bits select the DPLL filter type.

FILTER[1:0]	Name	Description
0x0	DEFAULT	Default filter mode
0x1	LBFILT	Low bandwidth filter
0x2	HBFILT	High bandwidth filter
0x3	HDFILT	High damping filter

Downloaded from Arrow.com.

17.8.20 DPLL Status

Name: DPLLSTATUS
Offset: 0x50
Reset: 0x00
Property: -

Bit	7	6	5	4	3	2	1	0
					DIV	ENABLE	CLKRDY	LOCK
Access					R	R	R	R
Reset					0	0	0	0

Bit 3 – DIV Divider Enable

Value	Description
0	The reference clock divider is disabled
1	The reference clock divider is enabled

Bit 2 – ENABLE DPLL Enable

Value	Description
0	The DPLL is disabled
1	The DPLL is enabled

Bit 1 – CLKRDY Output Clock Ready

Value	Description
0	The DPLL output clock is off
1	The DPLL output clock is on

Bit 0 – LOCK DPLL Lock Status

Value	Description
0	The DPLL Lock signal is cleared
1	The DPLL Lock signal is asserted

Downloaded from Arrow.com.

18. WDT – Watchdog Timer

18.1 Overview

The Watchdog Timer (WDT) is a system function for monitoring correct program operation. It makes it possible to recover from error situations such as runaway or deadlocked code. The WDT is configured to a predefined time-out period, and is constantly running when enabled. If the WDT is not cleared within the time-out period, it will issue a system reset. An early-warning interrupt is available to indicate an upcoming watchdog time-out condition.

The window mode makes it possible to define a time slot (or window) inside the total time-out period during which the WDT must be cleared. If the WDT is cleared outside this window, either too early or too late, a system reset will be issued. Compared to the normal mode, this can also catch situations where a code error causes the WDT to be cleared frequently.

When enabled, the WDT will run in active mode and all sleep modes. It is asynchronous and runs from a CPU-independent clock source. The WDT will continue operation and issue a system reset or interrupt even if the main clocks fail.

18.2 Features

- Issues a system reset if the Watchdog Timer is not cleared before its time-out period
- Early Warning interrupt generation
- Asynchronous operation from dedicated oscillator
- Two types of operation:
  - Normal mode
  - Window mode
- Selectable time-out periods
  - From 8 cycles to 16,000 cycles in normal mode
  - From 16 cycles to 32,000 cycles in window mode
- Always-on capability

18.3 Block Diagram

Figure 18-1. WDT Block Diagram

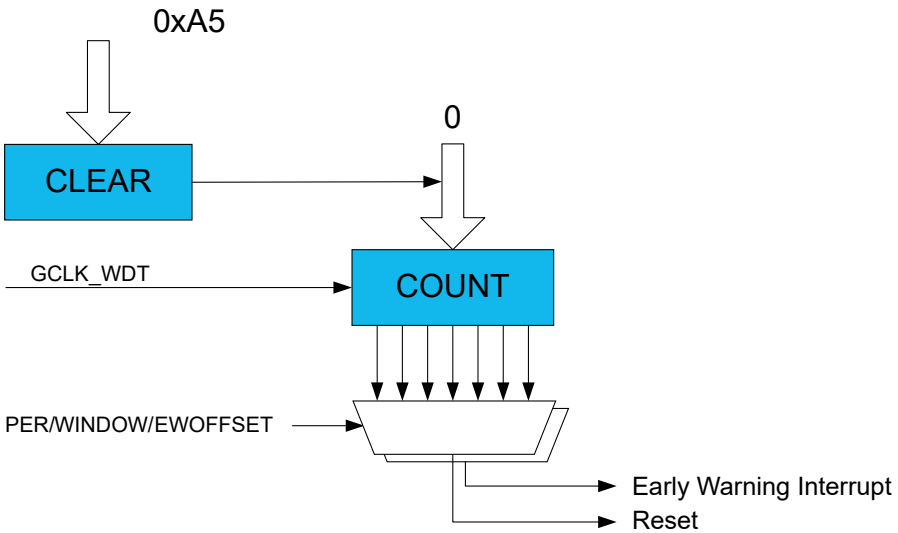

Downloaded from Arrow.com.

18.4 Signal Description

Not applicable.

18.5 Product Dependencies

In order to use this peripheral, other parts of the system must be configured correctly, as described below.

18.5.1 I/O Lines

Not applicable.

18.5.2 Power Management

The WDT can continue to operate in any sleep mode where the selected source clock is running. The WDT interrupts can be used to wake up the device from sleep modes. The events can trigger other operations in the system without exiting sleep modes.

Related Links

16. PM – Power Manager

18.5.3 Clocks

The WDT bus clock (CLK_WDT_APB) is enabled by default, and can be enabled and disabled in the Power Manager. Refer to *PM – Power Manager* for details.

A generic clock (GCLK_WDT) is required to clock the WDT. This clock must be configured and enabled in the Generic Clock Controller before using the WDT. Refer to *GCLK – Generic Clock Controller* for details. This generic clock is asynchronous to the user interface clock (CLK_WDT_APB). Due to this asynchronicity, accessing certain registers will require synchronization between the clock domains. Refer to *Synchronization* for further details.

GCLK_WDT is intended to be sourced from the clock of the internal ultra-low-power (ULP) oscillator. Due to the ultralow- power design, the oscillator is not very accurate, and so the exact time-out period may vary from device to device. This variation must be kept in mind when designing software that uses the WDT to ensure that the time-out periods used are valid for all devices. For more information on ULP oscillator accuracy, consult the *Ultra Low Power Internal 32kHz RC Oscillator (OSCULP32K) Characteristics*.

GCLK_WDT can also be clocked from other sources if a more accurate clock is needed, but at the cost of higher power consumption.

Related Links

16. PM – Power Manager
15. GCLK - Generic Clock Controller
17.6.5 32kHz Ultra Low Power Internal Oscillator (OSCULP32K) Operation
18.6.5 Synchronization

18.5.4 DMA

Not applicable.

18.5.5 Interrupts

The interrupt request line is connected to the interrupt controller. Using the WDT interrupt(s) requires the interrupt controller to be configured first.

Related Links

11.2 Nested Vector Interrupt Controller

18.5.6 Events

Not applicable.

Downloaded from Arrow.com.

18.5.7 Debug Operation

When the CPU is halted in debug mode the WDT will halt normal operation.

18.5.8 Register Access Protection

Registers with write-access can be optionally write-protected by the Peripheral Access Controller (PAC), except for the following:

- Interrupt Flag Status and Clear register (INTFLAG)

Note: Optional write-protection is indicated by the "PAC Write-Protection" property in the register description.

Related Links

11.6 Peripheral Access Controller (PAC)

18.5.9 Analog Connections

Not applicable.

18.6 Functional Description

18.6.1 Principle of Operation

The Watchdog Timer (WDT) is a system for monitoring correct program operation, making it possible to recover from error situations such as runaway code, by issuing a Reset. When enabled, the WDT is a constantly running timer that is configured to a predefined time-out period. Before the end of the time-out period, the WDT should be set back, or else, a system Reset is issued.

The WDT has two modes of operation, Normal mode and Window mode. Both modes offer the option of Early Warning interrupt generation. The description for each of the basic modes is given below. The settings in the Control register (CTRL) and the Interrupt Enable register (handled by INTENCLR/SET) determine the mode of operation:

Table 18-1. WDT Operating Modes

CTRL.ENABLE	CTRL.WEN	INTENSET.EW	Mode
0	x	x	Stopped
1	0	0	Normal
1	0	1	Normal with Early Warning interrupt
1	1	0	Window
1	1	1	Window with Early Warning interrupt

18.6.2 Basic Operation

18.6.2.1 Initialization

The following bits are enable-protected:

- Window Mode Enable in the Control register (CTRL.WEN)
- Always-On in the Control register (CTRL-ALWAYSON)

The following registers are enable-protected:

- Configuration register (CONFIG)
- Early Warning Interrupt Control register (EWCTRL)

Any writes to these bits or registers when the WDT is enabled or is being enabled (CTRL.ENABLE=1) will be discarded. Writes to these registers while the WDT is being disabled will be completed after the disabling is complete.

Enable-protection is denoted by the Enable-Protected property in the register description.

Initialization of the WDT can be done only while the WDT is disabled. The WDT is configured by defining the required Time-Out Period bits in the Configuration register (CONFIG.PER). If window-mode operation is required, the

Downloaded from Arrow.com.

Window Enable bit in the Control register (CTRL.WEN) must be written to one and the Window Period bits in the Configuration register (CONFIG.WINDOW) must be defined.

Normal Mode

- Defining the required Time-Out Period bits in the Configuration register (CONFIG.PER).

Normal Mode with Early Warning interrupt

- Defining the required Time-Out Period bits in the Configuration register (CONFIG.PER).
- Defining Early Warning Interrupt Time Offset bits in the Early Warning Interrupt Control register (EWCTRL.EWOFFSET).
- Setting Early Warning Interrupt Enable bit in the Interrupt Enable Set register (INTENSET.EW).

Window Mode

- Defining Time-Out Period bits in the Configuration register (CONFIG.PER).
- Defining Window Mode Time-Out Period bits in the Configuration register (CONFIG.WINDOW).
- Setting Window Enable bit in the Control register (CTRL.WEN).

Window Mode with Early Warning interrupt

- Defining Time-Out Period bits in the Configuration register (CONFIG.PER).
- Defining Window Mode Time-Out Period bits in the Configuration register (CONFIG.WINDOW).
- Setting Window Enable bit in the Control register (CTRL.WEN).
- Defining Early Warning Interrupt Time Offset bits in the Early Warning Interrupt Control register (EWCTRL.EWOFFSET).
- Setting Early Warning Interrupt Enable bit in the Interrupt Enable Set register (INTENSET.EW).

18.6.2.2 Configurable Reset Values

After a Power-on Reset, some registers will be loaded with initial values from the NVM User Row. Refer to *NVM User Row Mapping* for more details.

This encompasses the following bits and bit groups:

- Enable bit in the Control register, CTRL.ENABLE
- Always-On bit in the Control register, CTRL.ALWAYSON
- Watchdog Timer Windows Mode Enable bit in the Control register, CTRL.WEN
- Watchdog Timer Windows Mode Time-Out Period bits in the Configuration register, CONFIG.WINDOW
- Time-Out Period in the Configuration register, CONFIG.PER
- Early Warning Interrupt Time Offset bits in the Early Warning Interrupt Control register, EWCTRL.EWOFFSET

For more information about fuse locations, see *NVM User Row Mapping*.

Related Links

10.3.1 NVM User Row Mapping

18.6.2.3 Enabling and Disabling

The WDT is enabled by writing a '1' to the Enable bit in the Control register (CTRL.ENABLE). The WDT is disabled by writing a '0' to CTRL.ENABLE.

The WDT can be disabled only if the Always-On bit in the Control register (CTRL.ALWAYSON) is '0'.

18.6.2.4 Normal Mode

In Normal mode operation, the length of a time-out period is configured in CONFIG.PER. The WDT is enabled by writing a '1' to the Enable bit in the Control register (CTRL.ENABLE). Once enabled, the WDT will issue a system reset if a time-out occurs. This can be prevented by clearing the WDT at any time during the time-out period.

The WDT is cleared and a new WDT time-out period is started by writing 0xA5 to the Clear register (CLEAR). Writing any other value than 0xA5 to CLEAR will issue an immediate system reset.

There are 12 possible WDT time-out (TO_{WDT}) periods, selectable from 8ms to 16s.

Downloaded from Arrow.com.

By default, the early warning interrupt is disabled. If it is desired, the Early Warning Interrupt Enable bit in the Interrupt Enable register (INTENSET.EW) must be written to '1'. The Early Warning Interrupt is disabled again by writing a '1' to the Early Warning Interrupt bit in the Interrupt Enable Clear register (INTENCLR.EW). If the Early Warning Interrupt is enabled, an interrupt is generated prior to a WDT time-out condition. In Normal mode, the Early Warning Offset bits in the Early Warning Interrupt Control register, EWCTRL.EWOFFSET, define the time when the early warning interrupt occurs. The Normal mode operation is illustrated in the figure Normal-Mode Operation.

Figure 18-2. Normal-Mode Operation

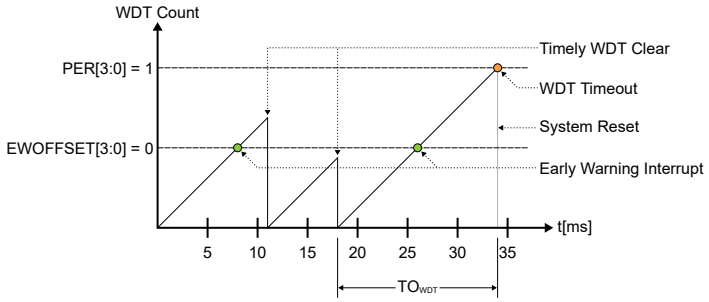

18.6.2.5 Window Mode

In Window mode operation, the WDT uses two different time specifications: the WDT can only be cleared by writing 0xA5 to the CLEAR register *after* the closed window time-out period (TO_{WDTW}), during the subsequent Normal time-out period (TO_{WDTW}). If the WDT is cleared before the time window opens (before TO_{WDTW} is over), the WDT will issue a system reset. Both parameters TO_{WDTW} and TO_{WDT} are periods in a range from 8ms to 16s, so the total duration of the WDT time-out period is the sum of the two parameters. The closed window period is defined by the Window Period bits in the Configuration register (CONFIG.WINDOW), and the open window period is defined by the Period bits in the Configuration register (CONFIG.PER).

By default, the Early Warning interrupt is disabled. If it is desired, the Early Warning Interrupt Enable bit in the Interrupt Enable register (INTENSET.EW) must be written to '1'. The Early Warning Interrupt is disabled again by writing a '1' to the Early Warning Interrupt bit in the Interrupt Enable Clear (INTENCLR.EW) register. If the Early Warning interrupt is enabled in Window mode, the interrupt is generated at the start of the open window period, i.e. after TO_{WDTW}. The Window mode operation is illustrated in figure Window-Mode Operation.

Figure 18-3. Window-Mode Operation

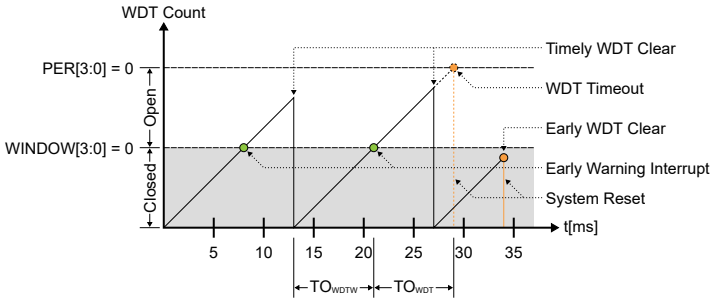

18.6.3 Additional Features

18.6.3.1 Always-On Mode

The Always-On mode is enabled by setting the Always-On bit in the Control register (CTRLA.ALWAYSON=1). When the Always-On mode is enabled, the WDT runs continuously, regardless of the state of CTRL.ENABLE. Once written, the Always-On bit can only be cleared by a power-on reset. The Configuration (CONFIG) and Early Warning Control (EWCTRL) registers are read-only registers while the CTRL.ALWAYSON bit is set. Thus, the time period configuration bits (CONFIG.PER, CONFIG.WINDOW, EWCTRL.EWOFFSET) of the WDT cannot be changed.

Enabling or disabling Window mode operation by writing the Window Enable bit (CTRLA.WEN) is allowed while in Always-On mode, but note that CONFIG.PER cannot be changed.

Downloaded from Arrow.com.

The CTRL.ALWAYSON bit must never be set to one by software if any of the following conditions is true:

1. The GCLK_WDT is disabled
2. The clock generator for the GCLK_WDT is disabled
3. The source clock of the clock generator for the GCLK_WDT is disabled or off

The Interrupt Clear and Interrupt Set registers are accessible in the Always-On mode. The Early Warning interrupt can still be enabled or disabled while in the Always-On mode, but note that EWCTRL.EWOFFSET cannot be changed.

Table 18-2. WDT Operating Modes With Always-On

WEN	Interrupt enable	Mode
0	0	Always-on and normal mode
0	1	Always-on and normal mode with Early Warning interrupt
1	0	Always-on and window mode
1	1	Always-on and window mode with Early Warning interrupt

18.6.4 Interrupts

The WDT has the following interrupt source:

- Early Warning (EW)

Each interrupt source has an interrupt flag associated with it. The interrupt flag in the Interrupt Flag Status and Clear (INTFLAG) register is set when the interrupt condition occurs. Each interrupt can be individually enabled by writing a '1' to the corresponding bit in the Interrupt Enable Set (INTENSET) register, and disabled by writing a '1' to the corresponding bit in the Interrupt Enable Clear (INTENCLR) register.

An interrupt request is generated when the interrupt flag is set and the corresponding interrupt is enabled. The interrupt request remains active until the interrupt flag is cleared, the interrupt is disabled, or the WDT is reset. See the INTFLAG register description for details on how to clear interrupt flags.

The WDT has one common interrupt request line for all the interrupt sources. The user must read the INTFLAG register to determine which interrupt condition is present.

Note: Interrupts must be globally enabled for interrupt requests to be generated.

The Early Warning interrupt behaves differently in normal mode and in window mode. In normal mode, the Early Warning interrupt generation is defined by the Early Warning Offset in the Early Warning Control register (EWCTRL.EWOFFSET). The Early Warning Offset bits define the number of GCLK_WDT clocks before the interrupt is generated, relative to the start of the watchdog time-out period. For example, if the WDT is operating in normal mode with CONFIG.PER = 0x2 and EWCTRL.EWOFFSET = 0x1, the Early Warning interrupt is generated 16 GCLK_WDT clock cycles from the start of the watchdog time-out period, and the watchdog time-out system reset is generated 32 GCLK_WDT clock cycles from the start of the watchdog time-out period. The user must take caution when programming the Early Warning Offset bits. If these bits define an Early Warning interrupt generation time greater than the watchdog time-out period, the watchdog time-out system reset is generated prior to the Early Warning interrupt. Thus, the Early Warning interrupt will never be generated.

In window mode, the Early Warning interrupt is generated at the start of the open window period. In a typical application where the system is in sleep mode, it can use this interrupt to wake up and clear the Watchdog Timer, after which the system can perform other tasks or return to sleep mode.

18.6.5 Synchronization

Due to asynchronicity between the main clock domain and the peripheral clock domains, some registers need to be synchronized when written or read.

When executing an operation that requires synchronization, the Synchronization Busy bit in the Status register (STATUS.SYNCBUSY) will be set immediately, and cleared when synchronization is complete.

If an operation that requires synchronization is executed while STATUS.SYNCBUSY='1', the bus will be stalled. All operations will complete successfully, but the CPU will be stalled and interrupts will be pending as long as the bus is stalled.

Downloaded from Arrow.com.

The following registers are synchronized when written:

- Control register (CTRL)
- Clear register (CLEAR)

Required write-synchronization is denoted by the "Write-Synchronized" property in the register description.

Related Links

14.3 Register Synchronization

Downloaded from Arrow.com.

18.7 Register Summary

Offset	Name	Bit Pos.	7	6	5	4	3	2	1	0
0x00	CTRL	7:0	ALWAYSON					WEN	ENABLE	
0x01	CONFIG	7:0	WINDOW[3:0]				PER[3:0]			
0x02	EWCTRL	7:0					EWOFFSET[3:0]			
0x03	Reserved									
0x04	INTENCLR	7:0								EW
0x05	INTENSET	7:0								EW
0x06	INTFLAG	7:0								EW
0x07	STATUS	7:0	SYNCBUSY							
0x08	CLEAR	7:0	CLEAR[7:0]							

18.8 Register Description

Registers can be 8, 16, or 32 bits wide. Atomic 8-, 16-, and 32-bit accesses are supported. In addition, the 8-bit quarters and 16-bit halves of a 32-bit register, and the 8-bit halves of a 16-bit register can be accessed directly.

Some registers require synchronization when read and/or written. Synchronization is denoted by the "Read-Synchronized" and/or "Write-Synchronized" property in each individual register description.

Some registers are enable-protected, meaning they can only be written when the module is disabled. Enable-protection is denoted by the "Enable-Protected" property in each individual register description.

Optional write-protection by the Peripheral Access Controller (PAC) is denoted by the "PAC Write-Protection" property in each individual register description.

Downloaded from Arrow.com.

18.8.1 Control

Name: CTRL
Offset: 0x0
Reset: N/A - Loaded from NVM User Row at start-up
Property: Write-Protected, Enable-Protected, Write-Synchronized

Bit	7	6	5	4	3	2	1	0
	ALWAYSON					WEN	ENABLE	
Access	R/W					R/W	R/W	
Reset	x					x	x	

Bit 7 – ALWAYSON Always-On
This bit allows the WDT to run continuously. After being written to one, this bit cannot be written to zero, and the WDT will remain enabled until a power-on reset is received. When this bit is one, the Control register (CTRL), the Configuration register (CONFIG) and the Early Warning Control register (EWCTRL) will be read-only, and any writes to these registers are not allowed. Writing a zero to this bit has no effect.
This bit is not enable-protected.
These bits are loaded from NVM User Row at start-up. Refer to *NVM User Row Mapping* for more details.

Value	Description
0	The WDT is enabled and disabled through the ENABLE bit.
1	The WDT is enabled and can only be disabled by a power-on reset (POR).

Bit 2 – WEN Watchdog Timer Window Mode Enable
The initial value of this bit is loaded from Flash Calibration.
This bit is loaded from NVM User Row at start-up. Refer to *NVM User Row Mapping* for more details.

Value	Description
0	Window mode is disabled (normal operation).
1	Window mode is enabled.

Bit 1 – ENABLE Enable
This bit enables or disables the WDT. Can only be written while CTRL.ALWAYSON is zero.
Due to synchronization, there is delay from writing CTRL.ENABLE until the peripheral is enabled/disabled. The value written to CTRL.ENABLE will read back immediately, and the Synchronization Busy bit in the Status register (STATUS.SYNCBUSY) will be set. STATUS.SYNCBUSY will be cleared when the operation is complete.
This bit is not enable-protected.
This bit is loaded from NVM User Row at start-up. Refer to *NVM User Row Mapping* for more details.

Value	Description
0	The WDT is disabled.
1	The WDT is enabled.

Related Links
10.3.1 NVM User Row Mapping

Downloaded from Arrow.com.

18.8.2 Configuration

Name: CONFIG
Offset: 0x1
Reset: N/A - Loaded from NVM User Row at startup
Property: Write-Protected, Enable-Protected, Write-Synchronized

Bit	7	6	5	4	3	2	1	0
	WINDOW[3:0]				PER[3:0]			
Access	R/W	R/W	R/W	R/W	R/W	R/W	R/W	R/W
Reset	x	x	x	x	x	x	x	x

Bits 7:4 – WINDOW[3:0] Window Mode Time-Out Period
In window mode, these bits determine the watchdog closed window period as a number of oscillator cycles.
These bits are loaded from NVM User Row at start-up. Refer to *NVM User Row Mapping* for more details.

Value	Description
0x0	8 clock cycles
0x1	16 clock cycles
0x2	32 clock cycles
0x3	64 clock cycles
0x4	128 clock cycles
0x5	256 clocks cycles
0x6	512 clocks cycles
0x7	1024 clock cycles
0x8	2048 clock cycles
0x9	4096 clock cycles
0xA	8192 clock cycles
0xB	16384 clock cycles
0xC-0xF	Reserved

Bits 3:0 – PER[3:0] Time-Out Period
These bits determine the watchdog time-out period as a number of GCLK_WDT clock cycles. In window mode operation, these bits define the open window period.
These bits are loaded from NVM User Row at start-up. Refer to *NVM User Row Mapping* for more details.

Value	Description
0x0	8 clock cycles
0x1	16 clock cycles
0x2	32 clock cycles
0x3	64 clock cycles
0x4	128 clock cycles
0x5	256 clocks cycles
0x6	512 clocks cycles
0x7	1024 clock cycles
0x8	2048 clock cycles
0x9	4096 clock cycles
0xA	8192 clock cycles
0xB	16384 clock cycles
0xC-0xF	Reserved

Related Links
10.3.1 NVM User Row Mapping

Downloaded from Arrow.com.

18.8.3 Early Warning Interrupt Control

Name: EWCTRL
Offset: 0x2
Reset: N/A - Loaded from NVM User Row at start-up
Property: Write-Protected, Enable-Protected

Bit	7	6	5	4	3	2	1	0
					EWOFFSET[3:0]			
Access					R/W	R/W	R/W	R/W
Reset					x	x	x	x

Bits 3:0 – EWOFFSET[3:0] Early Warning Interrupt Time Offset
These bits determine the number of GCLK_WDT clocks in the offset from the start of the watchdog time-out period to when the Early Warning interrupt is generated. These bits are loaded from NVM User Row at start-up. Refer to *NVM User Row Mapping* for more details.

Value	Description
0x0	8 clock cycles
0x1	16 clock cycles
0x2	32 clock cycles
0x3	64 clock cycles
0x4	128 clock cycles
0x5	256 clocks cycles
0x6	512 clocks cycles
0x7	1024 clock cycles
0x8	2048 clock cycles
0x9	4096 clock cycles
0xA	8192 clock cycles
0xB	16384 clock cycles
0xC-0xF	Reserved

Related Links
10.3.1 NVM User Row Mapping

Downloaded from Arrow.com.

18.8.4 Interrupt Enable Clear

Name: INTENCLR
Offset: 0x4
Reset: 0x00
Property: Write-Protected

Bit	7	6	5	4	3	2	1	0
								EW
Access								R/W
Reset								0

Bit 0 – EW Early Warning Interrupt Enable
Writing a zero to this bit has no effect.
Writing a one to this bit disables the Early Warning interrupt.

Value	Description
0	The Early Warning interrupt is disabled.
1	The Early Warning interrupt is enabled.

Downloaded from Arrow.com.

18.8.5 Interrupt Enable Set

Name: INTENSET
Offset: 0x5
Reset: 0x00
Property: Write-Protected

Bit	7	6	5	4	3	2	1	0
								EW
Access								R/W
Reset								0

Bit 0 – EW Early Warning Interrupt Enable
Writing a zero to this bit has no effect.
Writing a one to this bit enables the Early Warning interrupt.

Value	Description
0	The Early Warning interrupt is disabled.
1	The Early Warning interrupt is enabled.

Downloaded from Arrow.com.

18.8.6 Interrupt Flag Status and Clear

Name: INTFLAG
Offset: 0x6
Reset: 0x00
Property: –

Bit	7	6	5	4	3	2	1	0
								EW
Access								R/W
Reset								0

Bit 0 – EW Early Warning
This flag is set when an Early Warning interrupt occurs, as defined by the EWOFFSET bit group in EWCTRL.
Writing a zero to this bit has no effect.
Writing a one to this bit clears the Early Warning interrupt flag.

Downloaded from Arrow.com.

18.8.7 Status

Name: STATUS
Offset: 0x7
Reset: 0x00
Property: –

Bit	7	6	5	4	3	2	1	0
	SYNCBUSY							
Access	R							
Reset	0							

Bit 7 – SYNCBUSY Synchronization Busy
This bit is cleared when the synchronization of registers between clock domains is complete.
This bit is set when the synchronization of registers between clock domains is started.

Downloaded from Arrow.com.

18.8.8 Clear

Name: CLEAR
Offset: 0x8
Reset: 0x00
Property: Write-Protected, Write-Synchronized

Bit	7	6	5	4	3	2	1	0
	CLEAR[7:0]							
Access	W	W	W	W	W	W	W	W
Reset	0	0	0	0	0	0	0	0

Bits 7:0 – CLEAR[7:0] Watchdog Clear
Writing 0xA5 to this register will clear the Watchdog Timer and the watchdog time-out period is restarted. Writing any other value will issue an immediate system reset.

Downloaded from Arrow.com.

19. RTC – Real-Time Counter

19.1 Overview

The Real-Time Counter (RTC) is a 32-bit counter with a 10-bit programmable prescaler that typically runs continuously to keep track of time. The RTC can wake-up the device from Sleep modes using the alarm/compare wake-up, periodic wake-up, or overflow wake-up mechanisms

The RTC can be clocked from several clock sources selectable through the Generic Clock module (GCLK). This GCLK_RTC clock can then be divided with CTRLA.PRESCALER to achieve the required resolution.

The RTC can generate periodic peripheral events from outputs of the prescaler, as well as alarm/compare interrupts and peripheral events, which can trigger at any counter value. Additionally, the timer can trigger an overflow interrupt and peripheral event, and can be Reset on the occurrence of an alarm/compare match. This allows periodic interrupts and peripheral events at very long and accurate intervals.

The 10-bit programmable prescaler can scale down the clock source. By this, a wide range of resolutions and time-out periods can be configured. With a 32.768 kHz clock source, the minimum counter tick interval is 30.5 µs, and time-out periods can range up to 36 hours. For a counter tick interval of 1s, the maximum time-out period is more than 136 years.

19.2 Features

- 32-bit counter with 10-bit prescaler
- Multiple clock sources
- 32-bit or 16-bit Counter mode
  - One 32-bit or two 16-bit compare values
- Clock/Calendar mode
  - Time in seconds, minutes and hours (12/24)
  - Date in day of month, month and year
  - Leap year correction
- Digital prescaler correction/tuning for increased accuracy
- Overflow, alarm/compare match and prescaler interrupts and events
  - Optional clear on alarm/compare match

19.3 Block Diagram

Figure 19-1. RTC Block Diagram (Mode 0 — 32-Bit Counter)

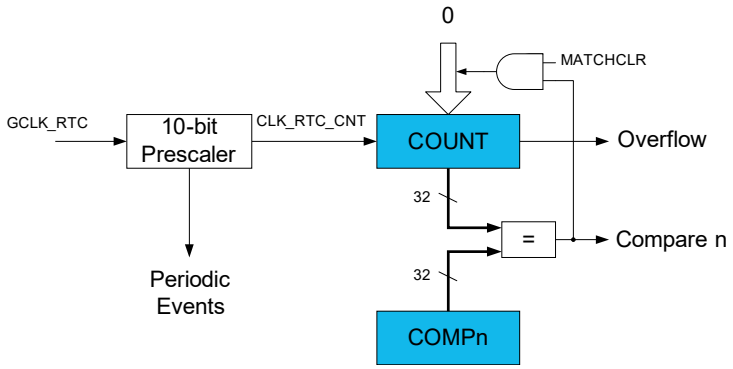

Downloaded from Arrow.com.

Figure 19-2. RTC Block Diagram (Mode 1 — 16-Bit Counter)

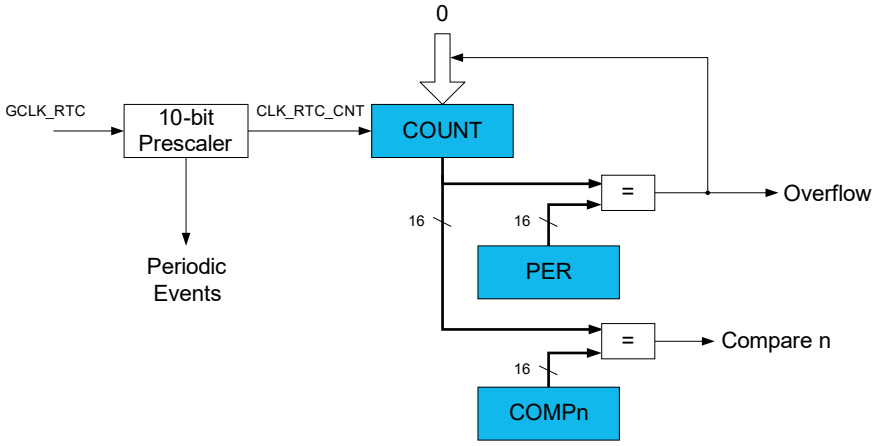

Figure 19-3. RTC Block Diagram (Mode 2 — Clock/Calendar)

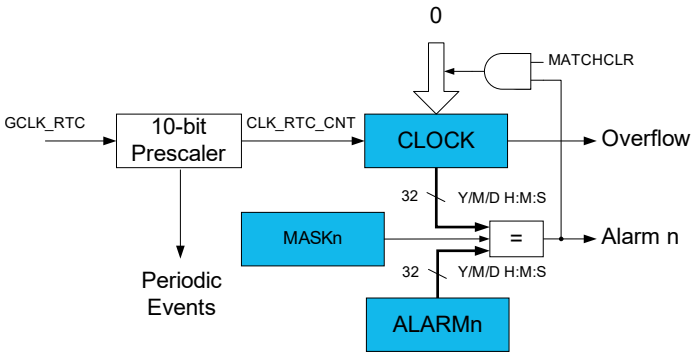

19.4 Signal Description

Not applicable.

19.5 Product Dependencies

In order to use this peripheral, other parts of the system must be configured correctly, as described below.

19.5.1 I/O Lines

Not applicable.

19.5.2 Power Management

The RTC will continue to operate in any sleep mode where the selected source clock is running. The RTC interrupts can be used to wake up the device from sleep modes. Events connected to the event system can trigger other operations in the system without exiting sleep modes. Refer to the *Power Manager* for details on the different sleep modes.

The RTC will be reset only at power-on (POR) or by setting the Software Reset bit in the Control register (CTRL.SWRST=1).

Related Links

16. PM – Power Manager

19.5.3 Clocks

The RTC bus clock (CLK_RTC_APB) can be enabled and disabled in the Power Manager, and the default state of CLK_RTC_APB can be found in the Peripheral Clock Masking section.

Downloaded from Arrow.com.

A generic clock (GCLK_RTC) is required to clock the RTC. This clock must be configured and enabled in the Generic Clock Controller before using the RTC. Refer to *GCLK – Generic Clock Controller* for details.

This generic clock is asynchronous to the user interface clock (CLK_RTC_APB). Due to this asynchronicity, accessing certain registers will require synchronization between the clock domains. Refer to 19.6.8 Synchronization for further details.

The RTC should not work with the Generic Clock Generator 0.

Related Links

16.6.2.6 Peripheral Clock Masking

15. GCLK - Generic Clock Controller

19.5.4 DMA

Not applicable.

19.5.5 Interrupts

The interrupt request line is connected to the Interrupt Controller. Using the RTC interrupts requires the Interrupt Controller to be configured first. Refer to *Nested Vector Interrupt Controller* for details.

Related Links

11.2 Nested Vector Interrupt Controller

19.5.6 Events

The events are connected to the *Event System*.

Related Links

24. EVSYS – Event System

19.5.7 Debug Operation

When the CPU is halted in debug mode the RTC will halt normal operation. The RTC can be forced to continue operation during debugging. Refer to the Debug Control (DBGCTRL) register for details.

19.5.8 Register Access Protection

Registers with write-access can be optionally write-protected by the Peripheral Access Controller (PAC), except for the following:

- Interrupt Flag Status and Clear register (INTFLAG)
- Read Request register (READREQ)
- Status register (STATUS)
- Debug register (DBGCTRL)

Note: Optional write-protection is indicated by the "PAC Write-Protection" property in the register description.

Write-protection does not apply for accesses through an external debugger.

19.5.9 Analog Connections

A 32.768kHz crystal can be connected to the XIN32 and XOUT32 pins, along with any required load capacitors. For details on recommended crystal characteristics and load capacitors, refer to *Electrical Characteristics* for details.

Related Links

37. Electrical Characteristics at 85°C

Downloaded from Arrow.com.

19.6 Functional Description

19.6.1 Principle of Operation

The RTC keeps track of time in the system and enables periodic events, as well as interrupts and events at a specified time. The RTC consists of a 10-bit prescaler that feeds a 32-bit counter. The actual format of the 32-bit counter depends on the RTC operating mode.

The RTC can function in one of these modes:

- Mode 0 - COUNT32: RTC serves as 32-bit counter
- Mode 1 - COUNT16: RTC serves as 16-bit counter
- Mode 2 - CLOCK: RTC serves as clock/calendar with alarm functionality

19.6.2 Basic Operation

19.6.2.1 Initialization

The following bits are enable-protected, meaning that they can only be written when the RTC is disabled (CTRL.ENABLE=0):

- Operating Mode bits in the Control register (CTRL.MODE)
- Prescaler bits in the Control register (CTRL.PRESCALER)
- Clear on Match bit in the Control register (CTRL.MATCHCLR)
- Clock Representation bit in the Control register (CTRL.CLKREP)

The following register is enable-protected:

- Event Control register (EVCTRL)

Any writes to these bits or registers when the RTC is enabled or being enabled (CTRL.ENABLE=1) will be discarded. Writes to these bits or registers while the RTC is being disabled will be completed after the disabling is complete.

Enable-protection is denoted by the "Enable-Protected" property in the register description.

Before the RTC is enabled, it must be configured, as outlined by the following steps:

1. RTC operation mode must be selected by writing the Operating Mode bit group in the Control register (CTRL.MODE)
2. Clock representation must be selected by writing the Clock Representation bit in the Control register (CTRL.CLKREP)
3. Prescaler value must be selected by writing the Prescaler bit group in the Control register (CTRL.PRESCALER)

The RTC prescaler divides the source clock for the RTC counter.
Note: In Clock/Calendar mode, the prescaler must be configured to provide a 1Hz clock to the counter for correct operation.

The frequency of the RTC clock (CLK_RTC_CNT) is given by the following formula:

$$f_{\mathrm{CLK_RTC_CNT}} = \frac{f_{\mathrm{GCLK_RTC}}}{2^{\mathrm{PRESCALER}}}$$

The frequency of the generic clock, GCLK_RTC, is given by f_{GCLK_RTC}, and $f_{CLK_RTC_CNT}$ is the frequency of the internal prescaled RTC clock, CLK_RTC_CNT.

19.6.2.2 Enabling, Disabling and Resetting

The RTC is enabled by setting the Enable bit in the Control register (CTRL.ENABLE=1). The RTC is disabled by writing CTRL.ENABLE=0.

The RTC is reset by setting the Software Reset bit in the Control register (CTRL.SWRST=1). All registers in the RTC, except DEBUG, will be reset to their initial state, and the RTC will be disabled. The RTC must be disabled before resetting it.

Downloaded from Arrow.com.

19.6.3 Operating Modes

The RTC counter supports three RTC operating modes: 32-bit Counter, 16-bit Counter and Clock/Calendar. The operating mode is selected by writing to the Operating Mode bit group in the Control register (CTRL.MODE).

19.6.3.1 32-Bit Counter (Mode 0)

When the RTC Operating Mode bits in the Control register are zero (CTRL.MODE=00), the counter operates in 32-bit Counter mode. The block diagram of this mode is shown in Figure 19-1. When the RTC is enabled, the counter will increment on every 0-to-1 transition of CLK_RTC_CNT. The counter will increment until it reaches the top value of 0xFFFFFFFF, and then wrap to 0x00000000. This sets the Overflow Interrupt flag in the Interrupt Flag Status and Clear register (INTFLAG.OVF).

The RTC counter value can be read from or written to the Counter Value register (COUNT) in 32-bit format.

The counter value is continuously compared with the 32-bit Compare register (COMP0). When a compare match occurs, the Compare 0interrupt flag in the Interrupt Flag Status and Clear register (INTFLAG.CMP0) is set on the next 0-to-1 transition of CLK_RTC_CNT.

If the Clear on Match bit in the Control register (CTRL.MATCHCLR) is '1', the counter is cleared on the next counter cycle when a compare match with COMP0 occurs. This allows the RTC to generate periodic interrupts or events with longer periods than are possible with the prescaler events. Note that when CTRL.MATCHCLR is '1', INTFLAG.CMP0 and INTFLAG.OVF will both be set simultaneously on a compare match with COMP0.

19.6.3.2 16-Bit Counter (Mode 1)

When the RTC Operating Mode bits in the Control register (CTRL.MODE) are 1, the counter operates in 16-bit Counter mode as shown in Figure 19-2. When the RTC is enabled, the counter will increment on every 0-to-1 transition of CLK_RTC_CNT. In 16-bit Counter mode, the 16-bit Period register (PER) holds the maximum value of the counter. The counter will increment until it reaches the PER value, and then wrap to 0x0000. This sets the Overflow interrupt flag in the Interrupt Flag Status and Clear register (INTFLAG.OVF).

The RTC counter value can be read from or written to the Counter Value register (COUNT) in 16-bit format.

The counter value is continuously compared with the 16-bit Compare registers (COMPn, n=0–1). When a compare match occurs, the Compare n interrupt flag in the Interrupt Flag Status and Clear register (INTFLAG.CMPn, n=0–1) is set on the next 0-to-1 transition of CLK_RTC_CNT.

19.6.3.3 Clock/Calendar (Mode 2)

When CTRL.MODE is two, the counter operates in Clock/Calendar mode, as shown in Figure 19-3. When the RTC is enabled, the counter will increment on every 0-to-1 transition of CLK_RTC_CNT. The selected clock source and RTC prescaler must be configured to provide a 1Hz clock to the counter for correct operation in this mode.

The time and date can be read from or written to the Clock Value register (CLOCK) in a 32-bit time/date format. Time is represented as:

- Seconds
- Minutes
- Hours

Hours can be represented in either 12- or 24-hour format, selected by the Clock Representation bit in the Control register (CTRL.CLKREP). This bit can be changed only while the RTC is disabled.

Date is represented as:

- Day as the numeric day of the month (starting at 1)
- Month as the numeric month of the year (1 = January, 2 = February, etc.)
- Year as a value counting the offset from a reference value that must be defined in software

The date is automatically adjusted for leap years, assuming every year divisible by 4 is a leap year. Therefore, the reference value must be a leap year, e.g. 2000. The RTC will increment until it reaches the top value of 23:59:59 December 31st of year 63, and then wrap to 00:00:00 January 1st of year 0. This will set the Overflow interrupt flag in the Interrupt Flag Status and Clear registers (INTFLAG.OVF).

The clock value is continuously compared with the 32-bit Alarm register (ALARM0). When an alarm match occurs, the Alarm 0 Interrupt flag in the Interrupt Flag Status and Clear registers (INTFLAG.ALARMn0) is set on the next 0-to-1 transition of CLK_RTC_CNT. E.g. For a 1Hz clock counter, it means the Alarm 0 Interrupt flag is set with a

Downloaded from Arrow.com.

delay of 1s after the occurrence of alarm match. A valid alarm match depends on the setting of the Alarm Mask Selection bits in the Alarm

A valid alarm match depends on the setting of the Alarm Mask Selection bits in the Alarm 0 Mask register (MASK0.SEL). These bits determine which time/date fields of the clock and alarm values are valid for comparison and which are ignored.

If the Clear on Match bit in the Control register (CTRL.MATCHCLR) is one, the counter is cleared on the next counter cycle when an alarm match with ALARM0 occurs. This allows the RTC to generate periodic interrupts or events with longer periods than are possible with the prescaler events (see 19.6.9.1 Periodic Events). Note that when CTRL.MATCHCLR is '1', INTFLAG.ALARM0 and INTFLAG.OVF will both be set simultaneously on an alarm match with ALARM0.

19.6.4 DMA Operation

Not applicable.

19.6.5 Interrupts

The RTC has the following interrupt sources which are asynchronous interrupts and can wake-up the device from any sleep mode.:

- Overflow (INTFLAG.OVF): Indicates that the counter has reached its top value and wrapped to zero.
- Compare n (INTFLAG.CMPn): Indicates a match between the counter value and the compare register.
- Alarm n (INTFLAG.ALARMn): Indicates a match between the clock value and the alarm register.
- Synchronization Ready (INTFLAG.SYNCRDY): Indicates an operation requires synchronization.

Each interrupt source has an interrupt flag associated with it. The interrupt flag in the Interrupt Flag Status and Clear (INTFLAG) register is set when the interrupt condition occurs. Each interrupt can be individually enabled by setting the corresponding bit in the Interrupt Enable Set register (INTENSET=1), and disabled by setting the corresponding bit in the Interrupt Enable Clear register (INTENCLR=1). An interrupt request is generated when the interrupt flag is raised and the corresponding interrupt is enabled. The interrupt request remains active until either the interrupt flag is cleared, the interrupt is disabled or the RTC is reset. See the description of the INTFLAG registers for details on how to clear interrupt flags. All interrupt requests from the peripheral are ORed together on system level to generate one combined interrupt request to the NVIC. Refer to the Nested Vector Interrupt Controller for details. The user must read the INTFLAG register to determine which interrupt condition is present.

Note: Interrupts must be globally enabled for interrupt requests to be generated. Refer to the Nested Vector Interrupt Controller for details.

Related Links

11.2 Nested Vector Interrupt Controller

19.6.6 Events

The RTC can generate the following output events, which are generated in the same way as the corresponding interrupts:

- Overflow (OVF): Indicates that the counter has reached its top value and wrapped to zero.
- Period n (PERn): The corresponding bit in the prescaler has toggled. Refer to 19.6.9.1 Periodic Events for details.
- Compare n (CMPn): Indicates a match between the counter value and the compare register.
- Alarm n (ALARMn): Indicates a match between the clock value and the alarm register.

Setting the Event Output bit in the Event Control Register (EVCTRL.xxxEO=1) enables the corresponding output event. Writing a zero to this bit disables the corresponding output event. Refer to the *EVSYS - Event System* for details on configuring the event system.

Related Links

24. EVSYS – Event System

Downloaded from Arrow.com.

19.6.7 Sleep Mode Operation

The RTC will continue to operate in any sleep mode where the source clock is active. The RTC *interrupts* can be used to wake up the device from a sleep mode. RTC *events* can trigger other operations in the system without exiting the sleep mode.

An interrupt request will be generated after the wake-up if the Interrupt Controller is configured accordingly. Otherwise the CPU will wake up directly, without triggering any interrupt. In this case, the CPU will continue executing right from the first instruction that followed the entry into sleep.

The periodic events can also wake up the CPU through the interrupt function of the Event System. In this case, the event must be enabled and connected to an event channel with its interrupt enabled. See *Event System* for more information.

Related Links

24. EVSYS – Event System

19.6.8 Synchronization

Due to asynchronicity between the main clock domain and the peripheral clock domains, some registers need to be synchronized when written or read.

When executing an operation that requires synchronization, the Synchronization Busy bit in the Status register (STATUS.SYNCBUSY) will be set immediately, and cleared when synchronization is complete. The Synchronization Ready interrupt can be used to signal when synchronization is complete. This can be accessed via the Synchronization Ready Interrupt Flag in the Interrupt Flag Status and Clear register (INTFLAG.SYNCRDY). If an operation that requires synchronization is executed while STATUS.SYNCBUSY is one, the bus will be stalled. All operations will complete successfully, but the CPU will be stalled and interrupts will be pending as long as the bus is stalled.

The following bits are synchronized when written:

- Software Reset bit in the Control register (CTRL.SWRST)
- Enable bit in the Control register (CTRL.ENABLE)

The following registers are synchronized when written:

- Counter Value register (COUNT)
- Clock Value register (CLOCK)
- Counter Period register (PER)
- Compare n Value registers (COMPn)
- Alarm n Value registers (ALARMn)
- Frequency Correction register (FREQCORR)
- Alarm n Mask register (MASKn)

Required write-synchronization is denoted by the "Write-Synchronized" property in the register description.

The following registers are synchronized when read:

- The Counter Value register (COUNT)
- The Clock Value register (CLOCK)

Required read-synchronization is denoted by the "Read-Synchronized" property in the register description.

Related Links

14.3 Register Synchronization

19.6.9 Additional Features

19.6.9.1 Periodic Events

The RTC prescaler can generate events at periodic intervals, allowing flexible system tick creation. Any of the upper eight bits of the prescaler (bits 2 to 9) can be the source of an event. When one of the eight Periodic Event Output bits in the Event Control register (EVCTRL.PEREO[n=0..7]) is '1', an event is generated on the 0-to-1 transition of the related bit in the prescaler, resulting in a periodic event frequency of:

Downloaded from Arrow.com.

$$f_{PERIODIC} = \frac{f_{GCLK_RTC}}{2^{n+3}}$$

f_{GCLK_RTC} is the frequency of the internal prescaler clock, GCLK_RTC, and n is the position of the EVCTRL.PEREOn bit. For example, PER0 will generate an event every eight CLK_RTC_OSC cycles, PER1 every 16 cycles, etc. This is shown in the figure below. Periodic events are independent of the prescaler setting used by the RTC counter, except if CTRL.PRESCALER is zero. Then, no periodic events will be generated.

Figure 19-4. Example Periodic Events

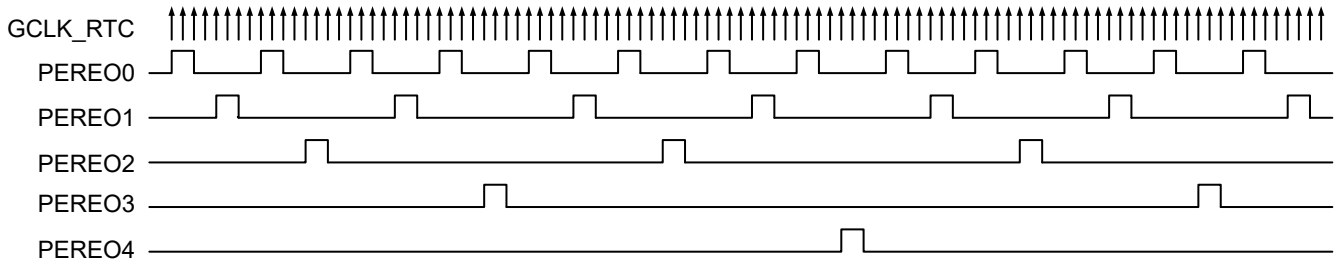

19.6.9.2 Frequency Correction

The RTC Frequency Correction module employs periodic counter corrections to compensate for a too-slow or too-fast oscillator. Frequency correction requires that CTRL.PRESCALER is greater than 1.

The digital correction circuit adds or subtracts cycles from the RTC prescaler to adjust the frequency in approximately 1 ppm steps. Digital correction is achieved by adding or skipping a single count in the prescaler once every 4096 GCLK_RTC_OSC cycles. The Value bit group in the Frequency Correction register (FREQCORR.VALUE) determines the number of times the adjustment is applied over 240 of these periods. The resulting correction is as follows:

*Correction in ppm = (FREQCORR.VALUE / 4096 * 240) * 10^{6ppm}*

This results in a resolution of 1.017 PPM.

The Sign bit in the Frequency Correction register (FREQCORR.SIGN) determines the direction of the correction. A positive value will add counts and increase the period (reducing the frequency), and a negative value will reduce counts per period (speeding up the frequency). Digital correction also affects the generation of the periodic events from the prescaler. When the correction is applied at the end of the correction cycle period, the interval between the previous periodic event and the next occurrence may also be shortened or lengthened depending on the correction value.

19.7 Register Summary

The register mapping depends on the Operating Mode bits in the Control register (CTRL.MODE). The register summary is presented for each of the three modes.

Table 19-1. MODE0 - Mode Register Summary

Offset	Name	Bit Pos.								
0x00	CTRL	7:0	MATCHCLR				MODE[1:0]		ENABLE	SWRST
0x01		15:8					PRESCALER[3:0]			
0x02	READREQ	7:0					ADDR[5:0]			
0x03		15:8	RREQ	RCONT						
0x04	EVCTRL	7:0	PEREO7	PEREO6	PEREO5	PEREO4	PEREO3	PEREO2	PEREO1	PEREO0
0x05		15:8	OVFEO							CMPEO0
0x06	INTENCLR	7:0	OVF	SYNCRDY						CMP0
0x07	INTENSET	7:0	OVF	SYNCRDY						CMP0
0x08	INTFLAG	7:0	OVF	SYNCRDY						CMP0

Downloaded from Arrow.com.

.....continued										
Offset	Name	Bit Pos.								
0x09	Reserved									
0x0A	STATUS	7:0	SYNCBUSY							
0x0B	DBGCTRL	7:0								DBGRUN
0x0C	FREQCORR	7:0	SIGN	VALUE[6:0]						
0x0D ... 0x0F	Reserved									
0x10	COUNT	7:0	COUNT[7:0]							
0x11		15:8	COUNT[15:8]							
0x12		23:16	COUNT[23:16]							
0x13		31:24	COUNT[31:24]							
0x14 ... 0x17	Reserved									
0x18	COMP0	7:0	COMP[7:0]							
0x19		15:8	COMP[15:8]							
0x1A		23:16	COMP[23:16]							
0x1B		31:24	COMP[31:24]							

Table 19-2. MODE1 - Mode Register Summary

Offset	Name	Bit Pos.								
0x00	CTRL	7:0					MODE[1:0]		ENABLE	SWRST
0x01		15:8					PRESCALER[3:0]			
0x02	READREQ	7:0			ADDR[5:0]					
0x03		15:8	RREQ	RCONT						
0x04	EVCTRL	7:0	PEREO7	PEREO6	PEREO5	PEREO4	PEREO3	PEREO2	PEREO1	PEREO0
0x05		15:8	OVFEO						CMPEO1	CMPEO0
0x06	INTENCLR	7:0	OVF	SYNCRDY					CMP1	CMP0
0x07	INTENSET	7:0	OVF	SYNCRDY					CMP1	CMP0
0x08	INTFLAG	7:0	OVF	SYNCRDY					CMP1	CMP0
0x09	Reserved									
0x0A	STATUS	7:0	SYNCBUSY							
0x0B	DBGCTRL	7:0								DBGRUN
0x0C	FREQCORR	7:0	SIGN	VALUE[6:0]						
0x0D ... 0x0F	Reserved									
0x10	COUNT	7:0	COUNT[7:0]							
0x11		15:8	COUNT[15:8]							
0x12	Reserved									
0x13	Reserved									
0x14	PER	7:0	PER[7:0]							
0x15		15:8	PER[15:8]							
0x16	Reserved									
0x17	Reserved									
0x18	COMP0	7:0	COMP[7:0]							
0x19		15:8	COMP[15:8]							
0x1A	COMP1	7:0	COMP[7:0]							
0x1B		15:8	COMP[15:8]							

Downloaded from Arrow.com.

Table 19-3. MODE2 - Mode Register Summary

Offset	Name	Bit Pos.								
0x00	CTRL	7:0	MATCHCLR	CLKREP			MODE[1:0]		ENABLE	SWRST
0x01		15:8					PRESCALER[3:0]			
0x02	READREQ	7:0			ADDR[5:0]					
0x03		15:8	RREQ	RCONT						
0x04	EVCTRL	7:0	PEREO7	PEREO6	PEREO5	PEREO4	PEREO3	PEREO2	PEREO1	PEREO0
0x05		15:8	OVFEO							ALARMEO0
0x06	INTENCLR	7:0	OVF	SYNCRDY						ALARM0
0x07	INTENSET	7:0	OVF	SYNCRDY						ALARM0
0x08	INTFLAG	7:0	OVF	SYNCRDY						ALARM0
0x09	Reserved									
0x0A	STATUS	7:0	SYNCBUSY							
0x0B	DBGCTRL	7:0								DBGRUN
0x0C	FREQCORR	7:0	SIGN	VALUE[6:0]						
0x0D ... 0x0F	Reserved									
0x10	CLOCK	7:0	MINUTE[1:0]		SECOND[5:0]					
0x11		15:8	HOUR[3:0]				MINUTE[5:2]			
0x12		23:16	MONTH[1:0]		DAY[4:0]					HOUR[4]
0x13		31:24	YEAR[5:0]						MONTH[3:2]	
0x14 ... 0x17	Reserved									
0x18	ALARM0	7:0	MINUTE[1:0]		SECOND[5:0]					
0x19		15:8	HOUR[3:0]				MINUTE[5:2]			
0x1A		23:16	MONTH[1:0]		DAY[4:0]					HOUR[4]
0x1B		31:24	YEAR[5:0]						MONTH[3:2]	
0x1C	MASK	7:0						SEL[2:0]		

19.8 Register Description

Registers can be 8, 16, or 32 bits wide. Atomic 8-, 16-, and 32-bit accesses are supported. In addition, the 8-bit quarters and 16-bit halves of a 32-bit register, and the 8-bit halves of a 16-bit register can be accessed directly.

Optional write-protection by the Peripheral Access Controller (PAC) is denoted by the "PAC Write-Protection" property in each individual register description.

Some registers require synchronization when read and/or written. Synchronization is denoted by the "Read-Synchronized" and/or "Write-Synchronized" property in each individual register description.

Some registers are enable-protected, meaning they can only be written when the module is disabled. Enable-protection is denoted by the "Enable-Protected" property in each individual register description.

Downloaded from Arrow.com.

19.8.1 Control - MODE0

Name: CTRL
Offset: 0x00
Reset: 0x0000
Property: Enable-Protected, Write-Protected, Write-Synchronized

Bit	15	14	13	12	11	10	9	8
					PRESCALER[3:0]			
Access					R/W	R/W	R/W	R/W
Reset					0	0	0	0

Bit	7	6	5	4	3	2	1	0
	MATCHCLR				MODE[1:0]		ENABLE	SWRST
Access	R/W				R/W	R/W	R/W	W
Reset	0				0	0	0	0

Bits 11:8 – PRESCALER[3:0] Prescaler
These bits define the prescaling factor for the RTC clock source (GCLK_RTC) to generate the counter clock (CLK_RTC_CNT).
These bits are not synchronized.

PRESCALER[3:0]	Name	Description
0x0	DIV1	CLK_RTC_CNT = GCLK_RTC/1
0x1	DIV2	CLK_RTC_CNT = GCLK_RTC/2
0x2	DIV4	CLK_RTC_CNT = GCLK_RTC/4
0x3	DIV8	CLK_RTC_CNT = GCLK_RTC/8
0x4	DIV16	CLK_RTC_CNT = GCLK_RTC/16
0x5	DIV32	CLK_RTC_CNT = GCLK_RTC/32
0x6	DIV64	CLK_RTC_CNT = GCLK_RTC/64
0x7	DIV128	CLK_RTC_CNT = GCLK_RTC/128
0x8	DIV256	CLK_RTC_CNT = GCLK_RTC/256
0x9	DIV512	CLK_RTC_CNT = GCLK_RTC/512
0xA	DIV1024	CLK_RTC_CNT = GCLK_RTC/1024
0xB-0xF		Reserved

Bit 7 – MATCHCLR Clear on Match
This bit is valid only in Mode 0 and Mode 2.
This bit is not synchronized.

Value	Description
0	The counter is not cleared on a Compare/Alarm 0 match.
1	The counter is cleared on a Compare/Alarm 0 match.

Bits 3:2 – MODE[1:0] Operating Mode
These bits define the operating mode of the RTC.
These bits are not synchronized.

MODE[1:0]	Name	Description
0x0	COUNT32	Mode 0: 32-bit Counter
0x1	COUNT16	Mode 1: 16-bit Counter
0x2	CLOCK	Mode 2: Clock/Calendar
0x3		Reserved

Downloaded from Arrow.com.

Bit 1 – ENABLE Enable
Due to synchronization, there is delay from writing CTRL.ENABLE until the peripheral is enabled/disabled. The value written to CTRL.ENABLE will read back immediately, and the Synchronization Busy bit in the Status register (STATUS.SYNCBUSY) will be set. STATUS.SYNCBUSY will be cleared when the operation is complete.
This bit is not enable-protected.

Value	Description
0	The peripheral is disabled or being disabled.
1	The peripheral is enabled or being enabled.

Bit 0 – SWRST Software Reset
Writing a zero to this bit has no effect.
Writing a one to this bit resets all registers in the RTC, except DBGCTRL, to their initial state, and the RTC will be disabled.
Writing a one to CTRL.SWRST will always take precedence, meaning that all other writes in the same write-operation will be discarded.
Due to synchronization, there is a delay from writing CTRL.SWRST until the reset is complete. CTRL.SWRST and STATUS.SYNCBUSY will both be cleared when the reset is complete.
This bit is not enable-protected.

Value	Description
0	There is no reset operation ongoing.
1	The reset operation is ongoing.

Downloaded from Arrow.com.

19.8.2 Control - MODE1

Name: CTRL
Offset: 0x00
Reset: 0x0000
Property: Enable-Protected, Write-Protected, Write-Synchronized

Bit	15	14	13	12	11	10	9	8
					PRESCALER[3:0]			
Access					R/W	R/W	R/W	R/W
Reset					0	0	0	0

Bit	7	6	5	4	3	2	1	0
					MODE[1:0]		ENABLE	SWRST
Access					R/W	R/W	R/W	W
Reset					0	0	0	0

Bits 11:8 – PRESCALER[3:0] Prescaler
These bits define the prescaling factor for the RTC clock source (GCLK_RTC) to generate the counter clock (CLK_RTC_CNT).
These bits are not synchronized.

PRESCALER[3:0]	Name	Description
0x0	DIV1	CLK_RTC_CNT = GCLK_RTC/1
0x1	DIV2	CLK_RTC_CNT = GCLK_RTC/2
0x2	DIV4	CLK_RTC_CNT = GCLK_RTC/4
0x3	DIV8	CLK_RTC_CNT = GCLK_RTC/8
0x4	DIV16	CLK_RTC_CNT = GCLK_RTC/16
0x5	DIV32	CLK_RTC_CNT = GCLK_RTC/32
0x6	DIV64	CLK_RTC_CNT = GCLK_RTC/64
0x7	DIV128	CLK_RTC_CNT = GCLK_RTC/128
0x8	DIV256	CLK_RTC_CNT = GCLK_RTC/256
0x9	DIV512	CLK_RTC_CNT = GCLK_RTC/512
0xA	DIV1024	CLK_RTC_CNT = GCLK_RTC/1024
0xB-0xF		Reserved

Bits 3:2 – MODE[1:0] Operating Mode
These bits define the operating mode of the RTC.
These bits are not synchronized.

MODE[1:0]	Name	Description
0x0	COUNT32	Mode 0: 32-bit Counter
0x1	COUNT16	Mode 1: 16-bit Counter
0x2	CLOCK	Mode 2: Clock/Calendar
0x3		Reserved

Bit 1 – ENABLE Enable
Due to synchronization, there is delay from writing CTRL.ENABLE until the peripheral is enabled/disabled. The value written to CTRL.ENABLE will read back immediately, and the Synchronization Busy bit in the Status register (STATUS.SYNCBUSY) will be set. STATUS.SYNCBUSY will be cleared when the operation is complete.
This bit is not enable-protected.

Value	Description
0	The peripheral is disabled or being disabled.
1	The peripheral is enabled or being enabled.

Downloaded from Arrow.com.

Bit 0 – SWRST Software Reset
Writing a zero to this bit has no effect.
Writing a one to this bit resets all registers in the RTC, except DBGCTRL, to their initial state, and the RTC will be disabled.
Writing a one to CTRL.SWRST will always take precedence, meaning that all other writes in the same write-operation will be discarded.
Due to synchronization, there is a delay from writing CTRL.SWRST until the reset is complete. CTRL.SWRST and STATUS.SYNCBUSY will both be cleared when the reset is complete.
This bit is not enable-protected.

Value	Description
0	There is no reset operation ongoing.
1	The reset operation is ongoing.

Downloaded from Arrow.com.

19.8.3 Control - MODE2

Name: CTRL
Offset: 0x00
Reset: 0x0000
Property: Enable-Protected, Write-Protected, Write-Synchronized

Bit	15	14	13	12	11	10	9	8
					PRESCALER[3:0]			
Access					R/W	R/W	R/W	R/W
Reset					0	0	0	0

Bit	7	6	5	4	3	2	1	0
	MATCHCLR	CLKREP			MODE[1:0]		ENABLE	SWRST
Access	R/W	R/W			R/W	R/W	R/W	W
Reset	0	0			0	0	0	0

Bits 11:8 – PRESCALER[3:0] Prescaler
These bits define the prescaling factor for the RTC clock source (GCLK_RTC) to generate the counter clock (CLK_RTC_CNT).
These bits are not synchronized.

PRESCALER[3:0]	Name	Description
0x0	DIV1	CLK_RTC_CNT = GCLK_RTC/1
0x1	DIV2	CLK_RTC_CNT = GCLK_RTC/2
0x2	DIV4	CLK_RTC_CNT = GCLK_RTC/4
0x3	DIV8	CLK_RTC_CNT = GCLK_RTC/8
0x4	DIV16	CLK_RTC_CNT = GCLK_RTC/16
0x5	DIV32	CLK_RTC_CNT = GCLK_RTC/32
0x6	DIV64	CLK_RTC_CNT = GCLK_RTC/64
0x7	DIV128	CLK_RTC_CNT = GCLK_RTC/128
0x8	DIV256	CLK_RTC_CNT = GCLK_RTC/256
0x9	DIV512	CLK_RTC_CNT = GCLK_RTC/512
0xA	DIV1024	CLK_RTC_CNT = GCLK_RTC/1024
0xB-0xF		Reserved

Bit 7 – MATCHCLR Clear on Match
This bit is valid only in Mode 0 and Mode 2. This bit can be written only when the peripheral is disabled.
This bit is not synchronized.

Value	Description
0	The counter is not cleared on a Compare/Alarm 0 match.
1	The counter is cleared on a Compare/Alarm 0 match.

Bit 6 – CLKREP Clock Representation
This bit is valid only in Mode 2 and determines how the hours are represented in the Clock Value (CLOCK) register.
This bit can be written only when the peripheral is disabled.
This bit is not synchronized.

Value	Description
0	24 Hour
1	12 Hour (AM/PM)

Bits 3:2 – MODE[1:0] Operating Mode
These bits define the operating mode of the RTC.
These bits are not synchronized.

Downloaded from Arrow.com.

MODE[1:0]	Name	Description
0x0	COUNT32	Mode 0: 32-bit Counter
0x1	COUNT16	Mode 1: 16-bit Counter
0x2	CLOCK	Mode 2: Clock/Calendar
0x3		Reserved

Bit 1 – ENABLE Enable
Due to synchronization, there is delay from writing CTRL.ENABLE until the peripheral is enabled/disabled. The value written to CTRL.ENABLE will read back immediately, and the Synchronization Busy bit in the Status register (STATUS.SYNCBUSY) will be set. STATUS.SYNCBUSY will be cleared when the operation is complete.
This bit is not enable-protected.

Value	Description
0	The peripheral is disabled or being disabled.
1	The peripheral is enabled or being enabled.

Bit 0 – SWRST Software Reset
Writing a zero to this bit has no effect.
Writing a one to this bit resets all registers in the RTC, except DBGCTRL, to their initial state, and the RTC will be disabled.
Writing a one to CTRL.SWRST will always take precedence, meaning that all other writes in the same write-operation will be discarded.
Due to synchronization, there is a delay from writing CTRL.SWRST until the reset is complete. CTRL.SWRST and STATUS.SYNCBUSY will both be cleared when the reset is complete.
This bit is not enable-protected.

Value	Description
0	There is no reset operation ongoing.
1	The reset operation is ongoing.

Downloaded from Arrow.com.

19.8.4 Read Request

Name: READREQ
Offset: 0x02
Reset: 0x0010
Property: -

Bit	15	14	13	12	11	10	9	8
	RREQ	RCONT						
Access	W	R/W						
Reset	0	0						

Bit	7	6	5	4	3	2	1	0
			ADDR[5:0]					
Access			R	R	R	R	R	R
Reset			0	1	0	0	0	0

Bit 15 – RREQ Read Request
Writing a zero to this bit has no effect.
Writing a one to this bit requests synchronization of the register pointed to by the Address bit group (READREQ.ADDR) and sets the Synchronization Busy bit in the Status register (STATUS.SYNCBUSY).

Bit 14 – RCONT Read Continuously
Writing a zero to this bit disables continuous synchronization.
Writing a one to this bit enables continuous synchronization of the register pointed to by READREQ.ADDR. The register value will be synchronized automatically every time the register is updated. READREQ.RCONT prevents READREQ.RREQ from clearing automatically. For the continuous read mode, RREQ bit is required to be set once the RCONT bit is set.
This bit is cleared when an RTC register is written.
Note: Once the continuous synchronization is enabled, the first write in the COUNT/CLOCK register will be stalled for a maximum of 6 APB + 6 RTC clock cycles (the time for the on-going read synchronization to complete).

Bits 5:0 – ADDR[5:0] Address
These bits select the offset of the register that needs read synchronization. In the RTC only COUNT and CLOCK, which share the same address, are available for read synchronization. Therefore, ADDR is a read-only constant of 0x10.

Downloaded from Arrow.com.

19.8.5 Event Control - MODE0

Name: EVCTRL
Offset: 0x04
Reset: 0x0000
Property: Enable-Protected, Write-Protected

Bit	15	14	13	12	11	10	9	8
	OVFEO							CMPEO0
Access	R/W							R/W
Reset	0							0

Bit	7	6	5	4	3	2	1	0
	PEREOx	PEREOx	PEREOx	PEREOx	PEREOx	PEREOx	PEREOx	PEREOx
Access	R/W	R/W	R/W	R/W	R/W	R/W	R/W	R/W
Reset	0	0	0	0	0	0	0	0

Bit 15 – OVFEO Overflow Event Output Enable

Value	Description
0	Overflow event is disabled and will not be generated.
1	Overflow event is enabled and will be generated for every overflow.

Bit 8 – CMPEO0 Compare 0 Event Output Enable

Value	Description
0	Compare 0 event is disabled and will not be generated.
1	Compare 0 event is enabled and will be generated for every compare match.

Bits 7,6,5,4,3,2,1,0 – PEREOx Periodic Interval x Event Output Enable [x=7:0]

Value	Description
0	Periodic Interval x event is disabled and will not be generated.
1	Periodic Interval x event is enabled and will be generated.

Downloaded from Arrow.com.

19.8.6 Event Control - MODE1

Name: EVCTRL
Offset: 0x04
Reset: 0x0000
Property: Enable-Protected, Write-Protected

Bit	15	14	13	12	11	10	9	8
	OVFEO						CMPEOx	CMPEOx
Access	R/W						R/W	R/W
Reset	0						0	0

Bit	7	6	5	4	3	2	1	0
	PEREOx	PEREOx	PEREOx	PEREOx	PEREOx	PEREOx	PEREOx	PEREOx
Access	R/W	R/W	R/W	R/W	R/W	R/W	R/W	R/W
Reset	0	0	0	0	0	0	0	0

Bit 15 – OVFEO Overflow Event Output Enable

Value	Description
0	Overflow event is disabled and will not be generated.
1	Overflow event is enabled and will be generated for every overflow.

Bits 9,8 – CMPEOx Compare x Event Output Enable [x=1:0]

Value	Description
0	Compare x event is disabled and will not be generated.
1	Compare x event is enabled and will be generated for every compare match.

Bits 7,6,5,4,3,2,1,0 – PEREOx Periodic Interval x Event Output Enable [x=7:0]

Value	Description
0	Periodic Interval x event is disabled and will not be generated.
1	Periodic Interval x event is enabled and will be generated.

Downloaded from Arrow.com.

19.8.7 Event Control - MODE2

Name: EVCTRL
Offset: 0x04
Reset: 0x0000
Property: Enable-Protected, Write-Protected

Bit	15	14	13	12	11	10	9	8
	OVFEO							ALARMEO0
Access	R/W							R/W
Reset	0							0

Bit	7	6	5	4	3	2	1	0
	PEREOx	PEREOx	PEREOx	PEREOx	PEREOx	PEREOx	PEREOx	PEREOx
Access	R/W	R/W	R/W	R/W	R/W	R/W	R/W	R/W
Reset	0	0	0	0	0	0	0	0

Bit 15 – OVFEO Overflow Event Output Enable

Value	Description
0	Overflow event is disabled and will not be generated.
1	Overflow event is enabled and will be generated for every overflow.

Bit 8 – ALARMEO0 Alarm 0 Event Output Enable

Value	Description
0	Alarm 0 event is disabled and will not be generated.
1	Alarm 0 event is enabled and will be generated for every alarm.

Bits 7,6,5,4,3,2,1,0 – PEREOx Periodic Interval x Event Output Enable [x=7:0]

Value	Description
0	Periodic Interval x event is disabled and will not be generated.
1	Periodic Interval x event is enabled and will be generated.

Downloaded from Arrow.com.

19.8.8 Interrupt Enable Clear - MODE0

Name: INTENCLR
Offset: 0x06
Reset: 0x00
Property: Write-Protected

Bit	7	6	5	4	3	2	1	0
	OVF	SYNCRDY						CMP0
Access	R/W	R/W						R/W
Reset	0	0						0

Bit 7 – OVF Overflow Interrupt Enable
Writing a zero to this bit has no effect.
Writing a one to this bit will clear the Overflow Interrupt Enable bit and disable the corresponding interrupt.

Value	Description
0	The Overflow interrupt is disabled.
1	The Overflow interrupt is enabled, and an interrupt request will be generated when the Overflow interrupt flag is set.

Bit 6 – SYNCRDY Synchronization Ready Interrupt Enable
Writing a zero to this bit has no effect.
Writing a one to this bit will clear the Synchronization Ready Interrupt Enable bit and disable the corresponding interrupt.

Value	Description
0	The Synchronization Ready interrupt is disabled.
1	The Synchronization Ready interrupt is enabled, and an interrupt request will be generated when the Synchronization Ready interrupt flag is set.

Bit 0 – CMP0 Compare 0 Interrupt Enable
Writing a zero to this bit has no effect.
Writing a one to this bit will clear the Compare 0 Interrupt Enable bit and disable the corresponding interrupt.

Value	Description
0	The Compare 0 interrupt is disabled.
1	The Compare 0 interrupt is enabled, and an interrupt request will be generated when the Compare x interrupt flag is set.

Downloaded from Arrow.com.

19.8.9 Interrupt Enable Clear - MODE1

Name: INTENCLR
Offset: 0x06
Reset: 0x00
Property: Write-Protected

Bit	7	6	5	4	3	2	1	0
	OVF	SYNCRDY					CMPx	CMPx
Access	R/W	R/W					R/W	R/W
Reset	0	0					0	0

Bit 7 – OVF Overflow Interrupt Enable
Writing a zero to this bit has no effect.
Writing a one to this bit will clear the Overflow Interrupt Enable bit and disable the corresponding interrupt.

Value	Description
0	The Overflow interrupt is disabled.
1	The Overflow interrupt is enabled, and an interrupt request will be generated when the Overflow interrupt flag is set.

Bit 6 – SYNCRDY Synchronization Ready Interrupt Enable
Writing a zero to this bit has no effect.
Writing a one to this bit will clear the Synchronization Ready Interrupt Enable bit and disable the corresponding interrupt.

Value	Description
0	The Synchronization Ready interrupt is disabled.
1	The Synchronization Ready interrupt is enabled, and an interrupt request will be generated when the Synchronization Ready interrupt flag is set.

Bits 1,0 – CMPx Compare x Interrupt Enable [x=1:0]
Writing a zero to this bit has no effect.
Writing a one to this bit will clear the Compare x Interrupt Enable bit and disable the corresponding interrupt.

Value	Description
0	The Compare x interrupt is disabled.
1	The Compare x interrupt is enabled, and an interrupt request will be generated when the Compare x interrupt flag is set.

Downloaded from Arrow.com.

19.8.10 Interrupt Enable Clear - MODE2

Name: INTENCLR
Offset: 0x06
Reset: 0x00
Property: Write-Protected

Bit	7	6	5	4	3	2	1	0
	OVF	SYNCRDY						ALARM0
Access	R/W	R/W						R/W
Reset	0	0						0

Bit 7 – OVF Overflow Interrupt Enable
Writing a zero to this bit has no effect.
Writing a one to this bit will clear the Overflow Interrupt Enable bit and disable the corresponding interrupt.

Value	Description
0	The Overflow interrupt is disabled.
1	The Overflow interrupt is enabled, and an interrupt request will be generated when the Overflow interrupt flag is set.

Bit 6 – SYNCRDY Synchronization Ready Interrupt Enable
Writing a zero to this bit has no effect.
Writing a one to this bit will clear the Synchronization Ready Interrupt Enable bit and disable the corresponding interrupt.

Value	Description
0	The synchronization ready interrupt is disabled.
1	The synchronization ready interrupt is enabled, and an interrupt request will be generated when the Synchronization Ready interrupt flag is set.

Bit 0 – ALARM0 Alarm 0 Interrupt Enable
Writing a zero to this bit has no effect.
Writing a one to this bit disables the Alarm 0 interrupt.

Value	Description
0	The Alarm 0 interrupt is disabled.
1	The Alarm 0 interrupt is enabled, and an interrupt request will be generated when the Alarm 0 interrupt flag is set.

Downloaded from Arrow.com.

19.8.11 Interrupt Enable Set - MODE0

Name: INTENSET
Offset: 0x07
Reset: 0x00
Property: Write-Protected

Bit	7	6	5	4	3	2	1	0
	OVF	SYNCRDY						CMP0
Access	R/W	R/W						R/W
Reset	0	0						0

Bit 7 – OVF Overflow Interrupt Enable
Writing a zero to this bit has no effect.
Writing a one to this bit will set the Overflow Interrupt Enable bit and enable the Overflow interrupt.

Value	Description
0	The overflow interrupt is disabled.
1	The overflow interrupt is enabled.

Bit 6 – SYNCRDY Synchronization Ready Interrupt Enable
Writing a zero to this bit has no effect.
Writing a one to this bit will set the Synchronization Ready Interrupt Enable bit and enable the Synchronization Ready interrupt.

Value	Description
0	The synchronization ready interrupt is disabled.
1	The synchronization ready interrupt is enabled.

Bit 0 – CMP0 Compare 0 Interrupt Enable
Writing a zero to this bit has no effect.
Writing a one to this bit will set the Compare 0 Interrupt Enable bit and enable the Compare 0 interrupt.

Value	Description
0	The compare 0 interrupt is disabled.
1	The compare 0 interrupt is enabled.

Downloaded from Arrow.com.

19.8.12 Interrupt Enable Set - MODE1

Name: INTENSET
Offset: 0x07
Reset: 0x00
Property: Write-Protected

Bit	7	6	5	4	3	2	1	0
	OVF	SYNCRDY					CMPx	CMPx
Access	R/W	R/W					R/W	R/W
Reset	0	0					0	0

Bit 7 – OVF Overflow Interrupt Enable
Writing a zero to this bit has no effect.
Writing a one to this bit will set the Overflow interrupt bit and enable the Overflow interrupt.

Value	Description
0	The overflow interrupt is disabled.
1	The overflow interrupt is enabled.

Bit 6 – SYNCRDY Synchronization Ready Interrupt Enable
Writing a zero to this bit has no effect.
Writing a one to this bit will set the Synchronization Ready Interrupt Enable bit and enable the Synchronization Ready interrupt.

Value	Description
0	The synchronization ready interrupt is disabled.
1	The synchronization ready interrupt is enabled.

Bits 1,0 – CMPx Compare x Interrupt Enable [x=1:0]
Writing a zero to this bit has no effect.
Writing a one to this bit will set the Compare x Interrupt Enable bit and enable the Compare x interrupt.

Value	Description
0	The compare x interrupt is disabled.
1	The compare x interrupt is enabled.

Downloaded from Arrow.com.

19.8.13 Interrupt Enable Set - MODE2

Name: INTENSET
Offset: 0x07
Reset: 0x00
Property: Write-Protected

Bit	7	6	5	4	3	2	1	0
	OVF	SYNCRDY						ALARM0
Access	R/W	R/W						R/W
Reset	0	0						0

Bit 7 – OVF Overflow Interrupt Enable
Writing a zero to this bit has no effect.
Writing a one to this bit will set the Overflow Interrupt Enable bit and enable the Overflow interrupt.

Value	Description
0	The overflow interrupt is disabled.
1	The overflow interrupt is enabled.

Bit 6 – SYNCRDY Synchronization Ready Interrupt Enable
Writing a zero to this bit has no effect.
Writing a one to this bit will set the Synchronization Ready Interrupt bit and enable the Synchronization Ready interrupt.

Value	Description
0	The synchronization ready interrupt is disabled.
1	The synchronization ready interrupt is enabled.

Bit 0 – ALARM0 Alarm 0 Interrupt Enable
Writing a zero to this bit has no effect.
Writing a one to this bit will set the Alarm 0 Interrupt Enable bit and enable the Alarm 0 interrupt.

Value	Description
0	The alarm 0 interrupt is disabled.
1	The alarm 0 interrupt is enabled.

Downloaded from Arrow.com.

19.8.14 Interrupt Flag Status and Clear - MODE0

Name: INTFLAG
Offset: 0x08
Reset: 0x00
Property: -

Bit	7	6	5	4	3	2	1	0
	OVF	SYNCRDY						CMP0
Access	R/W	R/W						R/W
Reset	0	0						0

Bit 7 – OVF Overflow
This flag is cleared by writing a one to the flag.
This flag is set on the next CLK_RTC_CNT cycle after an overflow condition occurs, and an interrupt request will be generated if INTENCLR/SET.OVF is one.
Writing a zero to this bit has no effect.
Writing a one to this bit clears the Overflow interrupt flag.

Bit 6 – SYNCRDY Synchronization Ready
This flag is cleared by writing a one to the flag.
This flag is set on a 1-to-0 transition of the Synchronization Busy bit in the Status register (STATUS.SYNCBUSY), except when caused by enable or software reset, and an interrupt request will be generated if INTENCLR/SET.SYNCRDY is one.
Writing a zero to this bit has no effect.
Writing a one to this bit clears the Synchronization Ready interrupt flag.

Bit 0 – CMP0 Compare 0
This flag is cleared by writing a one to the flag.
This flag is set on the next CLK_RTC_CNT cycle after a match with the compare condition, and an interrupt request will be generated if INTENCLR/SET.CMP0 is one.
Writing a zero to this bit has no effect.
Writing a one to this bit clears the Compare 0 interrupt flag.

Downloaded from Arrow.com.

19.8.15 Interrupt Flag Status and Clear - MODE1

Name: INTFLAG
Offset: 0x08
Reset: 0x00
Property: -

Bit	7	6	5	4	3	2	1	0
	OVF	SYNCRDY					CMPx	CMPx
Access	R/W	R/W					R/W	R/W
Reset	0	0					0	0

Bit 7 – OVF Overflow
This flag is cleared by writing a one to the flag.
This flag is set on the next CLK_RTC_CNT cycle after an overflow condition occurs, and an interrupt request will be generated if INTENCLR/SET.OVF is one.
Writing a zero to this bit has no effect.
Writing a one to this bit clears the Overflow interrupt flag.

Bit 6 – SYNCRDY Synchronization Ready
This flag is cleared by writing a one to the flag.
This flag is set on a 1-to-0 transition of the Synchronization Busy bit in the Status register (STATUS.SYNCBUSY), except when caused by enable or software reset, and an interrupt request will be generated if INTENCLR/SET.SYNCRDY is one.
Writing a zero to this bit has no effect.
Writing a one to this bit clears the Synchronization Ready interrupt flag.

Bits 1,0 – CMPx Compare x [x=1:0]
This flag is cleared by writing a one to the flag.
This flag is set on the next CLK_RTC_CNT cycle after a match with the compare condition and an interrupt request will be generated if INTENCLR/SET.CMPx is one.
Writing a zero to this bit has no effect.
Writing a one to this bit clears the Compare x interrupt flag.

Downloaded from Arrow.com.

19.8.16 Interrupt Flag Status and Clear - MODE2

Name: INTFLAG
Offset: 0x08
Reset: 0x00
Property: -

Bit	7	6	5	4	3	2	1	0
	OVF	SYNCRDY						ALARM0
Access	R/W	R/W						R/W
Reset	0	0						0

Bit 7 – OVF Overflow
This flag is cleared by writing a one to the flag.
This flag is set on the next CLK_RTC_CNT cycle after an overflow condition occurs, and an interrupt request will be generated if INTENCLR/SET.OVF is one.
Writing a zero to this bit has no effect.
Writing a one to this bit clears the Overflow interrupt flag.

Bit 6 – SYNCRDY Synchronization Ready
This flag is cleared by writing a one to the flag.
This flag is set on a 1-to-0 transition of the Synchronization Busy bit in the Status register (STATUS.SYNCBUSY), except when caused by enable or software reset, and an interrupt request will be generated if INTENCLR/SET.SYNCRDY is one.
Writing a zero to this bit has no effect.
Writing a one to this bit clears the Synchronization Ready interrupt flag.

Bit 0 – ALARM0 Alarm 0
This flag is cleared by writing a one to the flag.
This flag is set on the next CLK_RTC_CNT cycle after a match with ALARM0 condition occurs, and an interrupt request will be generated if INTENCLR/SET.ALARM0 is also one.
Writing a zero to this bit has no effect.
Writing a one to this bit clears the Alarm 0 interrupt flag.

Downloaded from Arrow.com.

19.8.17 Status

Name: STATUS
Offset: 0x0A
Reset: 0x00
Property: -

Bit	7	6	5	4	3	2	1	0
	SYNCBUSY							
Access	R							
Reset	0							

Bit 7 – SYNCBUSY Synchronization Busy
This bit is cleared when the synchronization of registers between the clock domains is complete.
This bit is set when the synchronization of registers between clock domains is started.

Downloaded from Arrow.com.

19.8.18 Debug Control

Name: DBGCTRL
Offset: 0x0B
Reset: 0x00
Property: -

Bit	7	6	5	4	3	2	1	0
								DBGRUN
Access								R/W
Reset								0

Bit 0 – DBGRUN Run During Debug
This bit is not reset by a software reset.
Writing a zero to this bit causes the RTC to halt during debug mode.
Writing a one to this bit allows the RTC to continue normal operation during debug mode.

Downloaded from Arrow.com.

19.8.19 Frequency Correction

Name: FREQCORR
Offset: 0x0C
Reset: 0x00
Property: Write-Protected, Write-Synchronized

Bit	7	6	5	4	3	2	1	0
	SIGN	VALUE[6:0]						
Access	R/W	R/W	R/W	R/W	R/W	R/W	R/W	R/W
Reset	0	0	0	0	0	0	0	0

Bit 7 – SIGN Correction Sign

Value	Description
0	The correction value is positive, i.e., frequency will be decreased.
1	The correction value is negative, i.e., frequency will be increased.

Bits 6:0 – VALUE[6:0] Correction Value
These bits define the amount of correction applied to the RTC prescaler.
1–127: The RTC frequency is adjusted according to the value.

Value	Description
0	Correction is disabled and the RTC frequency is unchanged.

Downloaded from Arrow.com.

19.8.20 Counter Value - MODE0

Name: COUNT
Offset: 0x10
Reset: 0x00000000
Property: Read-Synchronized, Write-Protected, Write-Synchronized

Bit	31	30	29	28	27	26	25	24
	COUNT[31:24]							
Access	R/W	R/W	R/W	R/W	R/W	R/W	R/W	R/W
Reset	0	0	0	0	0	0	0	0

Bit	23	22	21	20	19	18	17	16
	COUNT[23:16]							
Access	R/W	R/W	R/W	R/W	R/W	R/W	R/W	R/W
Reset	0	0	0	0	0	0	0	0

Bit	15	14	13	12	11	10	9	8
	COUNT[15:8]							
Access	R/W	R/W	R/W	R/W	R/W	R/W	R/W	R/W
Reset	0	0	0	0	0	0	0	0

Bit	7	6	5	4	3	2	1	0
	COUNT[7:0]							
Access	R/W	R/W	R/W	R/W	R/W	R/W	R/W	R/W
Reset	0	0	0	0	0	0	0	0

Bits 31:0 – COUNT[31:0] Counter Value
These bits define the value of the 32-bit RTC counter.

Downloaded from Arrow.com.

19.8.21 Counter Value - MODE1

Name: COUNT
Offset: 0x10
Reset: 0x0000
Property: Read-Synchronized, Write-Protected, Write-Synchronized

Bit	15	14	13	12	11	10	9	8
	COUNT[15:8]							
Access	R/W	R/W	R/W	R/W	R/W	R/W	R/W	R/W
Reset	0	0	0	0	0	0	0	0

Bit	7	6	5	4	3	2	1	0
	COUNT[7:0]							
Access	R/W	R/W	R/W	R/W	R/W	R/W	R/W	R/W
Reset	0	0	0	0	0	0	0	0

Bits 15:0 – COUNT[15:0] Counter Value
These bits define the value of the 16-bit RTC counter.

Downloaded from Arrow.com.

19.8.22 Clock Value - MODE2

Name: CLOCK
Offset: 0x10
Reset: 0x00000000
Property: Read-Synchronized, Write-Protected, Write-Synchronized

Bit	31	30	29	28	27	26	25	24
	YEAR[5:0]						MONTH[3:2]	
Access	R/W	R/W	R/W	R/W	R/W	R/W	R/W	R/W
Reset	0	0	0	0	0	0	0	0

Bit	23	22	21	20	19	18	17	16
	MONTH[1:0]		DAY[4:0]					HOUR[4]
Access	R/W	R/W	R/W	R/W	R/W	R/W	R/W	R/W
Reset	0	0	0	0	0	0	0	0

Bit	15	14	13	12	11	10	9	8
	HOUR[3:0]				MINUTE[5:2]			
Access	R/W	R/W	R/W	R/W	R/W	R/W	R/W	R/W
Reset	0	0	0	0	0	0	0	0

Bit	7	6	5	4	3	2	1	0
	MINUTE[1:0]		SECOND[5:0]					
Access	R/W	R/W	R/W	R/W	R/W	R/W	R/W	R/W
Reset	0	0	0	0	0	0	0	0

Bits 31:26 – YEAR[5:0] Year
The year offset with respect to the reference year (defined in software).
The year is considered a leap year if YEAR[1:0] is zero.

Bits 25:22 – MONTH[3:0] Month
1 – January
2 – February
...
12 – December

Bits 21:17 – DAY[4:0] Day
Day starts at 1 and ends at 28, 29, 30 or 31, depending on the month and year.

Bits 16:12 – HOUR[4:0] Hour
When CTRL.CLKREP is zero, the Hour bit group is in 24-hour format, with values 0-23. When CTRL.CLKREP is one, HOUR[3:0] has values 1-12 and HOUR[4] represents AM (0) or PM (1).

Table 19-4. Hour

HOUR[4:0]	CLOCK.HOUR[4]	CLOCK.HOUR[3:0]	Description
0	0x00 - 0x17		Hour (0 - 23)
	0x18 - 0x1F		Reserved
1	0	0x0	Reserved
		0x1 - 0xC	AM Hour (1 - 12)
		0xD - 0xF	Reserved
	1	0x0	Reserved
		0x1 - 0xC	PM Hour (1 - 12)
		0xF - 0xF	Reserved

Downloaded from Arrow.com.

Bits 11:6 – MINUTE[5:0] Minute
0 – 59.

Bits 5:0 – SECOND[5:0] Second
0– 59.

Downloaded from Arrow.com.

19.8.23 Counter Period - MODE1

Name: PER
Offset: 0x14
Reset: 0x0000
Property: Write-Protected, Write-Synchronized

Bit	15	14	13	12	11	10	9	8
	PER[15:8]							
Access	R/W	R/W	R/W	R/W	R/W	R/W	R/W	R/W
Reset	0	0	0	0	0	0	0	0

Bit	7	6	5	4	3	2	1	0
	PER[7:0]							
Access	R/W	R/W	R/W	R/W	R/W	R/W	R/W	R/W
Reset	0	0	0	0	0	0	0	0

Bits 15:0 – PER[15:0] Counter Period
These bits define the value of the 16-bit RTC period.

Downloaded from Arrow.com.

19.8.24 Compare n Value - MODE0

Name: COMP
Offset: 0x18
Reset: 0x00000000
Property: Write-Protected, Write-Synchronized

Bit	31	30	29	28	27	26	25	24
	COMP[31:24]							
Access	R/W	R/W	R/W	R/W	R/W	R/W	R/W	R/W
Reset	0	0	0	0	0	0	0	0

Bit	23	22	21	20	19	18	17	16
	COMP[23:16]							
Access	R/W	R/W	R/W	R/W	R/W	R/W	R/W	R/W
Reset	0	0	0	0	0	0	0	0

Bit	15	14	13	12	11	10	9	8
	COMP[15:8]							
Access	R/W	R/W	R/W	R/W	R/W	R/W	R/W	R/W
Reset	0	0	0	0	0	0	0	0

Bit	7	6	5	4	3	2	1	0
	COMP[7:0]							
Access	R/W	R/W	R/W	R/W	R/W	R/W	R/W	R/W
Reset	0	0	0	0	0	0	0	0

Bits 31:0 – COMP[31:0] Compare Value
The 32-bit value of COMPn is continuously compared with the 32-bit COUNT value. When a match occurs, the Compare n interrupt flag in the Interrupt Flag Status and Clear register (INTFLAG.CMPn) is set on the next counter cycle, and the counter value is cleared if CTRL.MATCHCLR is one.

Downloaded from Arrow.com.

19.8.25 Compare n Value - MODE1

Name: COMPn
Offset: 0x18+n*0x2 [n=0..1]
Reset: 0x0000
Property: Write-Protected, Write-Synchronized

Bit	15	14	13	12	11	10	9	8
	COMP[15:8]							
Access	R/W	R/W	R/W	R/W	R/W	R/W	R/W	R/W
Reset	0	0	0	0	0	0	0	0

Bit	7	6	5	4	3	2	1	0
	COMP[7:0]							
Access	R/W	R/W	R/W	R/W	R/W	R/W	R/W	R/W
Reset	0	0	0	0	0	0	0	0

Bits 15:0 – COMP[15:0] Compare Value
The 16-bit value of COMPn is continuously compared with the 16-bit COUNT value. When a match occurs, the Compare n interrupt flag in the Interrupt Flag Status and Clear register (INTFLAG.CMPn) is set on the next counter cycle.

Downloaded from Arrow.com.

19.8.26 Alarm 0 Value - MODE2

Name: ALARM0
Offset: 0x18
Reset: 0x00000000
Property: Write-Protected, Write-Synchronized

The 32-bit value of ALARM0 is continuously compared with the 32-bit CLOCK value, based on the masking set by MASKn.SEL. When a match occurs, the Alarm 0 interrupt flag in the Interrupt Flag Status and Clear register (INTFLAG.ALARMn) is set on the next counter cycle, and the counter is cleared if CTRL.MATCHCLR is one.

Bit	31	30	29	28	27	26	25	24
	YEAR[5:0]						MONTH[3:2]	
Access	R/W	R/W	R/W	R/W	R/W	R/W	R/W	R/W
Reset	0	0	0	0	0	0	0	0

Bit	23	22	21	20	19	18	17	16
	MONTH[1:0]		DAY[4:0]					HOUR[4]
Access	R/W	R/W	R/W	R/W	R/W	R/W	R/W	R/W
Reset	0	0	0	0	0	0	0	0

Bit	15	14	13	12	11	10	9	8
	HOUR[3:0]				MINUTE[5:2]			
Access	R/W	R/W	R/W	R/W	R/W	R/W	R/W	R/W
Reset	0	0	0	0	0	0	0	0

Bit	7	6	5	4	3	2	1	0
	MINUTE[1:0]		SECOND[5:0]					
Access	R/W	R/W	R/W	R/W	R/W	R/W	R/W	R/W
Reset	0	0	0	0	0	0	0	0

Bits 31:26 – YEAR[5:0] Year
The alarm year. Years are only matched if MASKn.SEL is 6.

Bits 25:22 – MONTH[3:0] Month
The alarm month. Months are matched only if MASKn.SEL is greater than 4.

Bits 21:17 – DAY[4:0] Day
The alarm day. Days are matched only if MASKn.SEL is greater than 3.

Bits 16:12 – HOUR[4:0] Hour
The alarm hour. Hours are matched only if MASKn.SEL is greater than 2.

Bits 11:6 – MINUTE[5:0] Minute
The alarm minute. Minutes are matched only if MASKn.SEL is greater than 1.

Bits 5:0 – SECOND[5:0] Second
The alarm second. Seconds are matched only if MASKn.SEL is greater than 0.

Downloaded from Arrow.com.

19.8.27 Alarm n Mask - MODE2

Name: MASK
Offset: 0x1C
Reset: 0x00
Property: Write-Protected, Write-Synchronized

Bit	7	6	5	4	3	2	1	0
						SEL[2:0]		
Access						R/W	R/W	R/W
Reset						0	0	0

Bits 2:0 – SEL[2:0] Alarm Mask Selection
These bits define which bit groups of Alarm n are valid.

SEL[2:0]	Name	Description
0x0	OFF	Alarm Disabled
0x1	SS	Match seconds only
0x2	MMSS	Match seconds and minutes only
0x3	HHMMSS	Match seconds, minutes, and hours only
0x4	DDHHMMSS	Match seconds, minutes, hours, and days only
0x5	MMDDHHMMSS	Match seconds, minutes, hours, days, and months only
0x6	YYMMDDHHMMSS	Match seconds, minutes, hours, days, months, and years
0x7		Reserved

Downloaded from Arrow.com.

20. DMAC – Direct Memory Access Controller

20.1 Overview

The Direct Memory Access Controller (DMAC) contains both a Direct Memory Access (DMA) engine and a Cyclic Redundancy Check (CRC) engine. The DMAC can transfer data between memories and peripherals and therefore, off-load these tasks from the CPU. It enables high data transfer rates with minimum CPU intervention, and frees up CPU time. With access to all peripherals, the DMAC can handle automatic transfer of data between communication modules.

The DMA part of the DMAC has several DMA channels, which can receive different types of transfer triggers and generate transfer requests from the DMA channels to the arbiter (Refer to the Block Diagram). The arbiter will select one DMA channel at a time to act as the active channel. When an active channel has been selected, the fetch engine of the DMAC will fetch a transfer descriptor from the SRAM and store it in the internal memory of the active channel, which will then execute the data transmission.

An ongoing data transfer of an active channel can be interrupted by a higher prioritized DMA channel. The DMAC will write back the updated transfer descriptor from the internal memory of the active channel to SRAM, and grant the higher prioritized channel a start transfer as the new active channel. Once a DMA channel is done with its transfer, interrupts and events can be generated optionally.

The DMAC has four bus interfaces:

- The *data transfer bus* is used for performing the actual DMA transfer.
- The *AHB/APB Bridge bus* is used when writing and reading the I/O registers of the DMAC.
- The *descriptor fetch bus* is used by the fetch engine to fetch transfer descriptors before data transfer can be started or continued.
- The *write-back bus* is used to write the transfer descriptor back to SRAM.

All buses are AHB host interfaces except the AHB/APB Bridge bus, which is an APB client interface.

The CRC engine can be used by software to detect an accidental error in the transferred data and to take corrective action, such as requesting the data to be sent again or simply not using the incorrect data.

20.2 Features

- Data Transfer From:
  - Peripheral-to-peripheral
  - Peripheral-to-memory
  - Memory-to-peripheral
  - Memory-to-memory
- Transfer Trigger Sources:
  - Software
  - Events from Event System
  - Dedicated requests from peripherals
- SRAM-based Transfer Descriptors:
  - Single transfer using one descriptor
  - Multi-buffer or Circular Buffer modes by linking multiple descriptors
- Up to 12 Channels:
  - Enable 12 independent transfers
  - Automatic descriptor fetch for each channel
  - Suspend/resume operation support for each channel
- Flexible Arbitration Scheme:
  - 4 configurable priority levels for each channel

Downloaded from Arrow.com.

  - Fixed or round-robin priority scheme within each priority level
- From 1 to 256KB Data Transfer in a Single Block Transfer
- Multiple Addressing Modes:
  - Static
  - Configurable increment scheme
- Optional Interrupt Generation:
  - On block transfer complete
  - On error detection
  - On channel suspend
- 4 Event Inputs:
  - One event input for each of the 4 least significant DMA channels
  - Can be selected to trigger normal transfers, periodic transfers or conditional transfers
  - Can be selected to suspend or resume channel operation
- 4 Event Outputs:
  - One output event for each of the 4 least significant DMA channels
  - Selectable generation on AHB, block, or transaction transfer complete
- Error Management Supported by Write-back Function:
  - Dedicated write-back memory section for each channel to store ongoing descriptor transfer
- CRC Polynomial Software Selectable to:
  - CRC-16 (CRC-CCITT)
  - CRC-32 (IEEE® 802.3)

20.3 Block Diagram

Figure 20-1. DMAC Block Diagram

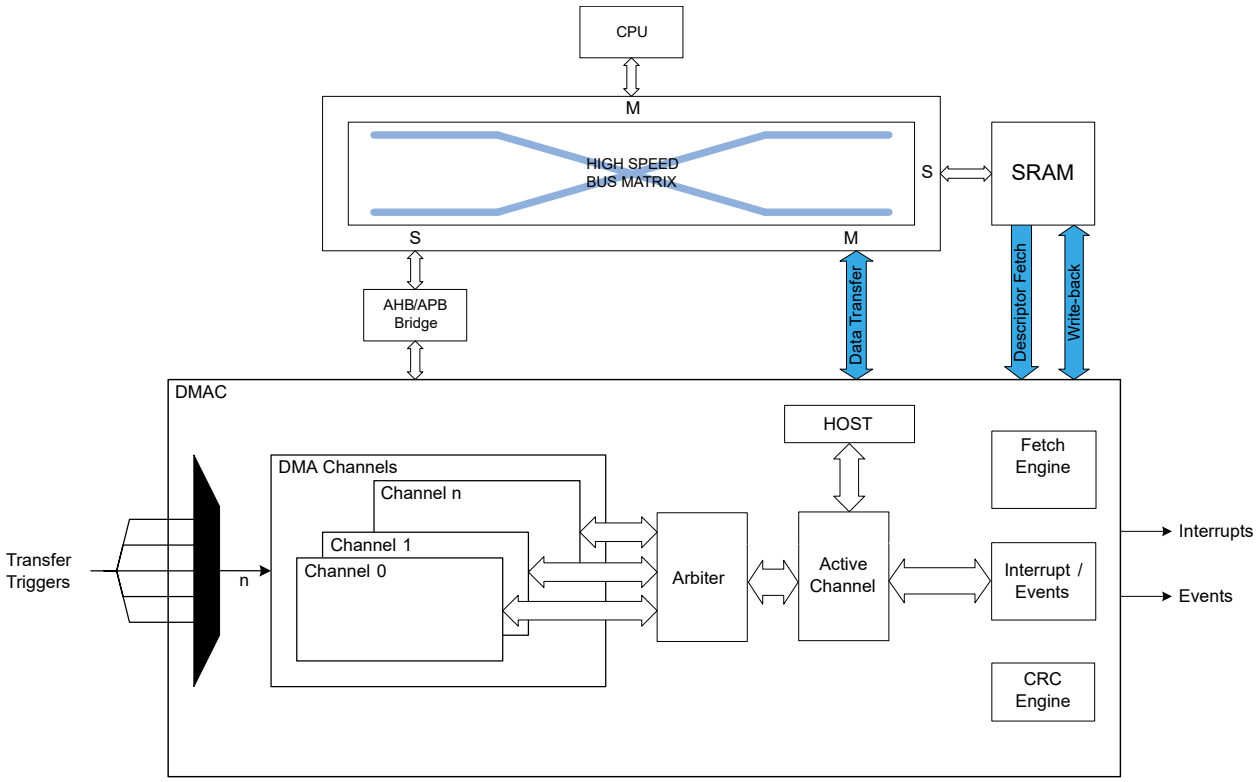

Downloaded from Arrow.com.

20.4 Signal Description

Not applicable.

20.5 Product Dependencies

In order to use this peripheral, other parts of the system must be configured correctly, as described below.

20.5.1 I/O Lines

Not applicable.

20.5.2 Power Management

The DMAC will continue to operate in IDLE 0 mode where the selected source clock is running. The DMAC's interrupts can be used to wake-up the device from Sleep modes. Events connected to the event system can trigger other operations in the system without exiting Sleep modes. On hardware or software Reset, all registers are set to their Reset value.

Related Links

16. PM – Power Manager

20.5.3 Clocks

The DMAC bus clock (CLK_DMAC_APB) must be configured and enabled in the Power Manager before using the DMAC.

An AHB clock (CLK_DMAC_AHB) is required to clock the DMAC. This clock must be configured and enabled in the power manager before using the DMAC, and the default state of CLK_DMAC_AHB can be found in *Peripheral Clock Masking*.

This bus clock (CLK_DMAC_APB) is always synchronous to the module clock (CLK_DMAC_AHB), but can be divided by a prescaler and may run even when the module clock is turned off.

Related Links

16.6.2.6 Peripheral Clock Masking

20.5.4 DMA

Not applicable.

20.5.5 Interrupts

The interrupt request line is connected to the interrupt controller. Using the DMAC interrupt requires the interrupt controller to be configured first.

Related Links

11.2 Nested Vector Interrupt Controller

20.5.6 Events

DMAC Channels 0-3 can serve as both an Event Generator and as an Event User.

Related Links

24. EVSYS – Event System

20.5.7 Debug Operation

When the CPU is halted in debug mode the DMAC will halt normal operation. The DMAC can be forced to continue operation during debugging. Refer to 20.8.6 DBGCTRL for details.

20.5.8 Register Access Protection

All registers with write-access can be write-protected optionally by the Peripheral Access Controller (PAC), except for the following registers:

Downloaded from Arrow.com.

- Interrupt Pending register (INTPEND)
- Channel ID register (CHID)
- Channel Interrupt Flag Status and Clear register (CHINTFLAG)

Optional write-protection by the Peripheral Access Controller (PAC) is denoted by the "PAC Write-Protection" property in each individual register description.

PAC write-protection does not apply to accesses through an external debugger.

Related Links

11.6 Peripheral Access Controller (PAC)

20.5.9 Analog Connections

Not applicable.

20.6 Functional Description

20.6.1 Principle of Operation

The DMAC consists of a DMA module and a CRC module.

20.6.1.1 DMA

The DMAC can transfer data between memories and peripherals without interaction from the CPU. The data transferred by the DMAC are called transactions, and these transactions can be split into smaller data transfers. The following figure shows the relationship between the different transfer sizes:

Figure 20-2. DMA Transfer Sizes

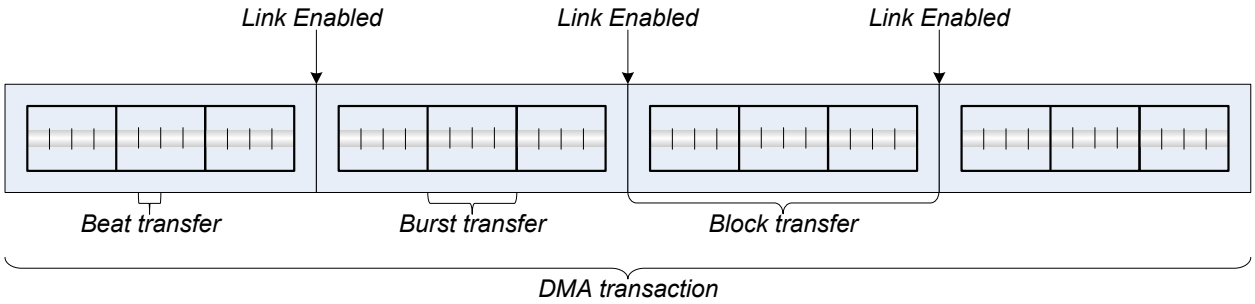

- **Beat transfer:** The size of one data transfer bus access, and the size is selected by writing the Beat Size bit group in the Block Transfer Control register (BTCTRL.BEATSIZE)
- **Burst transfer:** Defined as n beat transfers, where n will differ from one device family to another. A burst transfer is atomic, and cannot be interrupted .
- **Block transfer:** The amount of data one transfer descriptor can transfer, and the amount can range from 1 to 64k beats. A block transfer can be interrupted, in contrast to the burst transfer.
- **Transaction:** The DMAC can link several transfer descriptors by having the first descriptor pointing to the second and so forth, as shown in the figure above. A DMA transaction is the complete transfer of all blocks within a linked list.

A transfer descriptor describes how a block transfer should be carried out by the DMAC, and it must remain in SRAM. For further details on the transfer descriptor refer to 20.6.2.3 Transfer Descriptors.

The figure above shows several block transfers linked together, which are called linked descriptors. For further information about linked descriptors, refer to 20.6.3.1 Linked Descriptors.

A DMA transfer is initiated by an incoming transfer trigger on one of the DMA channels. This trigger can be configured to be either a software trigger, an event trigger, or one of the dedicated peripheral triggers. The transfer trigger will result in a DMA transfer request from the specific channel to the arbiter. If there are several DMA channels with pending transfer requests, the arbiter chooses which channel is granted access to become the active channel. The DMA channel granted access as the active channel will carry out the transaction as configured in the transfer descriptor. A current transaction can be interrupted by a higher prioritized channel after each burst transfer, but will resume the block transfer when the according DMA channel is granted access as the active channel again.

Downloaded from Arrow.com.

For each beat transfer, an optional output event can be generated. For each block transfer, optional interrupts and an optional output event can be generated. When a transaction is completed, dependent of the configuration, the DMA channel will either be suspended or disabled.

20.6.1.2 CRC

The internal CRC engine supports two commonly used CRC polynomials: CRC-16 (CRC-CCITT) and CRC-32 (IEEE 802.3). It can be used on a selectable DMA channel, or on the I/O interface. Refer to 20.6.3.7 CRC Operation for details.

20.6.2 Basic Operation

20.6.2.1 Initialization

The following DMAC registers are enable-protected, meaning that they can only be written when the DMAC is disabled (CTRL.DMAENABLE=0):

- Descriptor Base Memory Address register (BASEADDR)
- Write-Back Memory Base Address register (WRBADDR)

The following DMAC bit is enable-protected, meaning that it can only be written when both the DMAC and CRC are disabled (CTRL.DMAENABLE=0 and CTRL.CRCENABLE=0):

- Software Reset bit in Control register (CTRL.SWRST)

The following DMA channel register is enable-protected, meaning that it can only be written when the corresponding DMA channel is disabled (CHCTRLA.ENABLE=0):

- Channel Control B (CHCTRLB) register, except the Command bit (CHCTRLB.CMD) and the Channel Arbitration Level bit (CHCTRLB.LVL)

The following DMA channel bit is enable-protected, meaning that it can only be written when the corresponding DMA channel is disabled:

- Channel Software Reset bit in Channel Control A register (CHCTRLA.SWRST)

The following CRC registers are enable-protected, meaning that they can only be written when the CRC is disabled (CTRL.CRCENABLE=0):

- CRC Control register (CRCCTRL)
- CRC Checksum register (CRCCHKSUM)

Enable-protection is denoted by the "Enable-Protected" property in the register description.

Before the DMAC is enabled it must be configured, as outlined by the following steps:

- The SRAM address of where the descriptor memory section is located must be written to the Description Base Address (BASEADDR) register
- The SRAM address of where the write-back section should be located must be written to the Write-Back Memory Base Address (WRBADDR) register
- Priority level x of the arbiter can be enabled by setting the Priority Level x Enable bit in the Control register (CTRL.LVLENx=1)

Before a DMA channel is enabled, the DMA channel and the corresponding first transfer descriptor must be configured, as outlined by the following steps:

- DMA channel configurations
  - The channel number of the DMA channel to configure must be written to the Channel ID (CHID) register
  - Trigger action must be selected by writing the Trigger Action bit group in the Channel Control B register (CHCTRLB.TRIGACT)
  - Trigger source must be selected by writing the Trigger Source bit group in the Channel Control B register (CHCTRLB.TRIGSRC)
- Transfer Descriptor
  - The size of each access of the data transfer bus must be selected by writing the Beat Size bit group in the Block Transfer Control register (BTCTRL.BEATSIZE)

Downloaded from Arrow.com.

  - The transfer descriptor must be made valid by writing a one to the Valid bit in the Block Transfer Control register (BTCTRL.VALID)
  - Number of beats in the block transfer must be selected by writing the Block Transfer Count (BTCNT) register
  - Source address for the block transfer must be selected by writing the Block Transfer Source Address (SRCADDR) register
  - Destination address for the block transfer must be selected by writing the Block Transfer Destination Address (DSTADDR) register

If CRC calculation is needed, the CRC engine must be configured before it is enabled, as outlined by the following steps:

- The CRC input source must selected by writing the CRC Input Source bit group in the CRC Control register (CRCCTRL.CRCSRC)
- The type of CRC calculation must be selected by writing the CRC Polynomial Type bit group in the CRC Control register (CRCCTRL.CRCPOLY)
- If I/O is selected as input source, the beat size must be selected by writing the CRC Beat Size bit group in the CRC Control register (CRCCTRL.CRCBEATSIZE)

20.6.2.2 Enabling, Disabling, and Resetting

The DMAC is enabled by writing the DMA Enable bit in the Control register (CTRL.DMAENABLE) to '1'. The DMAC is disabled by writing a '0' to CTRL.DMAENABLE.

A DMA channel is enabled by writing the Enable bit in the Channel Control A register (CHCTRLA.ENABLE) to '1', after writing the corresponding channel id to the Channel ID bit group in the Channel ID register (CHID.ID). A DMA channel is disabled by writing a '0' to CHCTRLA.ENABLE.

The CRC is enabled by writing a '1' to the CRC Enable bit in the Control register (CTRL.CRCENABLE). The CRC is disabled by writing a '0' to CTRL.CRCENABLE.

The DMAC is reset by writing a '1' to the Software Reset bit in the Control register (CTRL.SWRST) while the DMAC and CRC are disabled. All registers in the DMAC except DBGCTRL will be reset to their initial state.

A DMA channel is reset by writing a '1' to the Software Reset bit in the Channel Control A register (CHCTRLA.SWRST), after writing the corresponding channel id to the Channel ID bit group in the Channel ID register (CHID.ID). The channel registers will be reset to their initial state. The corresponding DMA channel must be disabled in order for the reset to take effect.

20.6.2.3 Transfer Descriptors

Together with the channel configurations the transfer descriptors decides how a block transfer should be executed. Before a DMA channel is enabled (CHCTRLA.ENABLE is written to one), and receives a transfer trigger, its first transfer descriptor has to be initialized and valid (BTCTRL.VALID). The first transfer descriptor describes the first block transfer of a transaction.

All transfer descriptors must reside in SRAM. The addresses stored in the Descriptor Memory Section Base Address (BASEADDR) and Write-Back Memory Section Base Address (WRBADDR) registers tell the DMAC where to find the descriptor memory section and the write-back memory section.

The descriptor memory section is where the DMAC expects to find the first transfer descriptors for all DMA channels. As BASEADDR points only to the first transfer descriptor of channel 0 (see figure below), all first transfer descriptors must be stored in a contiguous memory section, where the transfer descriptors must be ordered according to their channel number. For further details on linked descriptors, refer to 20.6.3.1 Linked Descriptors.

The write-back memory section is the section where the DMAC stores the transfer descriptors for the ongoing block transfers. WRBADDR points to the ongoing transfer descriptor of channel 0. All ongoing transfer descriptors will be stored in a contiguous memory section where the transfer descriptors are ordered according to their channel number. The figure below shows an example of linked descriptors on DMA channel 0. For further details on linked descriptors, refer to 20.6.3.1 Linked Descriptors.

Downloaded from Arrow.com.

Figure 20-3. Memory Sections

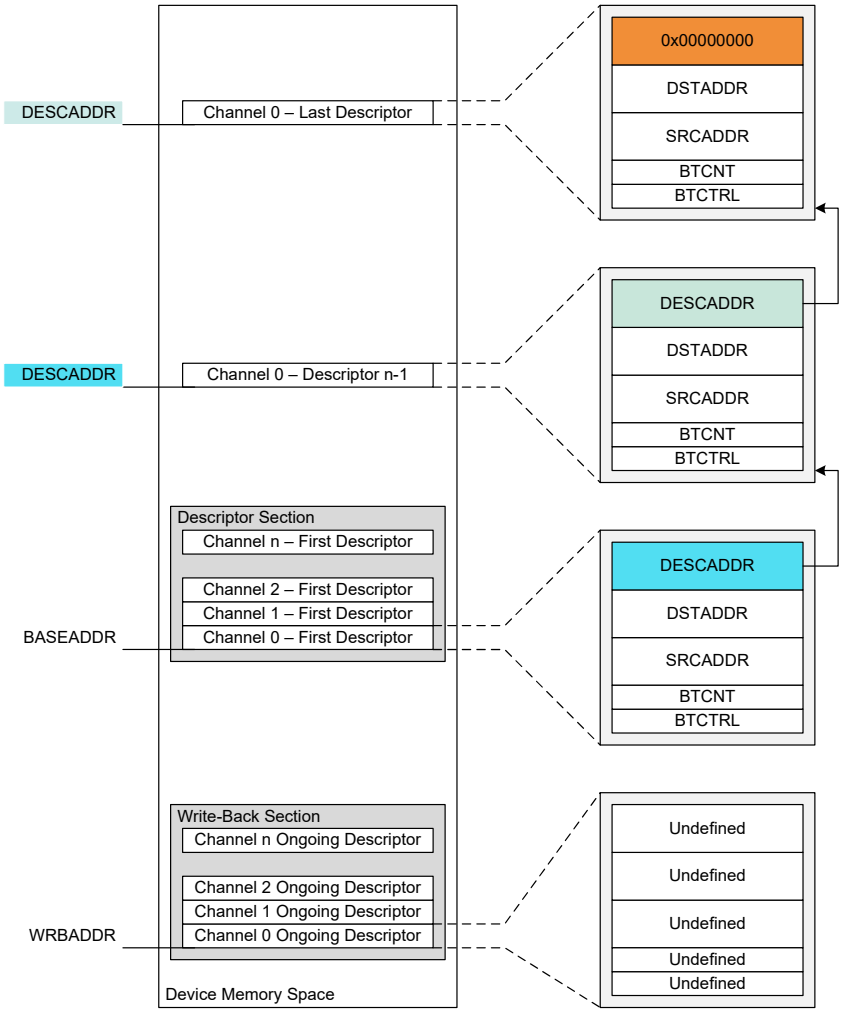

The size of the descriptor and write-back memory sections is dependent on the number of the most significant enabled DMA channel *m*, as shown below:

$$Size = 128\text{bits} \cdot (m + 1)$$

For memory optimization, it is recommended to always use the less significant DMA channels if not all channels are required.

The descriptor and write-back memory sections can either be two separate memory sections, or they can share memory section (BASEADDR=WRBADDR). The benefit of having them in two separate sections, is that the same transaction for a channel can be repeated without having to modify the first transfer descriptor. In addition, the latency from fetching the first descriptor of a transaction to the first burst transfer is executed, is reduced.

20.6.2.4 Arbitration

If a DMA channel is enabled and not suspended when it receives a transfer trigger, it will send a transfer request to the arbiter. When the arbiter receives the transfer request it will include the DMA channel in the queue of channels having pending transfers, and the corresponding Pending Channel x bit in the Pending Channels registers (PENDCH.PENDCHx) will be set. Depending on the arbitration scheme, the arbiter will choose which DMA channel will be the next active channel. The active channel is the DMA channel being granted access to perform its next burst transfer. When the arbiter has granted a DMA channel access to the DMAC, the corresponding bit PENDCH.PENDCHx will be cleared. See also the following figure.

If the upcoming burst transfer is the first for the transfer request, the corresponding Busy Channel x bit in the Busy Channels register will be set (BUSYCH.BUSYCHx=1), and it will remain '1' for the subsequent granted burst transfers.

Downloaded from Arrow.com.

When the channel has performed its granted burst transfer(s) it will be either fed into the queue of channels with pending transfers, set to be waiting for a new transfer trigger, suspended, or disabled. This depends on the channel and block transfer configuration. If the DMA channel is fed into the queue of channels with pending transfers, the corresponding BUSYCH.BUSYCHx will remain '1'. If the DMA channel is set to wait for a new transfer trigger, suspended, or disabled, the corresponding BUSYCH.BUSYCHx will be cleared.

If a DMA channel is suspended while it has a pending transfer, it will be removed from the queue of pending channels, but the corresponding PENDCH.PENDCHx will remain set. When the same DMA channel is resumed, it will be added to the queue of pending channels again.

If a DMA channel gets disabled (CHCTRLA.ENABLE=0) while it has a pending transfer, it will be removed from the queue of pending channels, and the corresponding PENDCH.PENDCHx will be cleared.

Figure 20-4. Arbiter Overview

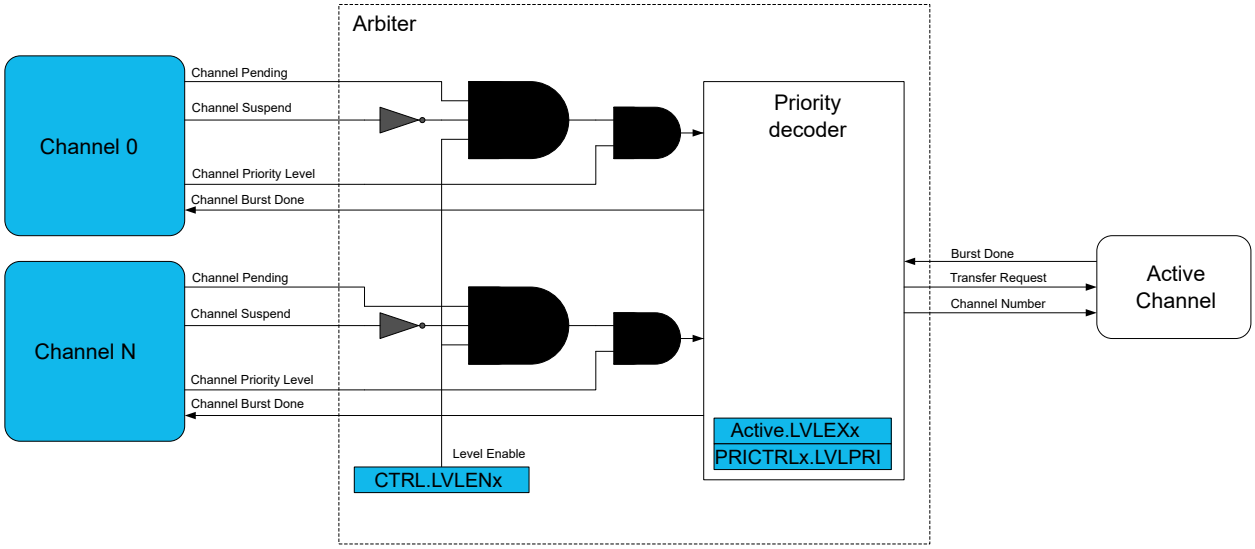

Priority Levels

When a channel level is pending or the channel is transferring data, the corresponding Level Executing bit is set in the Active Channel and Levels register (ACTIVE.LVLEXx).

Each DMA channel supports a 4-level priority scheme. The priority level for a channel is configured by writing to the Channel Arbitration Level bit group in the Channel Control B register (CHCTRLB.LVL). As long as all priority levels are enabled, a channel with a higher priority level number will have priority over a channel with a lower priority level number. Each priority level x is enabled by setting the corresponding Priority Level x Enable bit in the Control register (CTRL.LVLENx=1).

Within each priority level the DMAC's arbiter can be configured to prioritize statically or dynamically:

Static Arbitration within a priority level is selected by writing a '0' to the Level x Round-Robin Scheduling Enable bit in the Priority Control 0 register (PRICTRL0.RRLVLENx).

When static arbitration is selected, the arbiter will prioritize a low channel number over a high channel number as shown in the figure below. When using the static arbitration there is a risk of high channel numbers never being granted access as the active channel. This can be avoided using a dynamic arbitration scheme.

Downloaded from Arrow.com.

Figure 20-5. Static Priority Scheduling

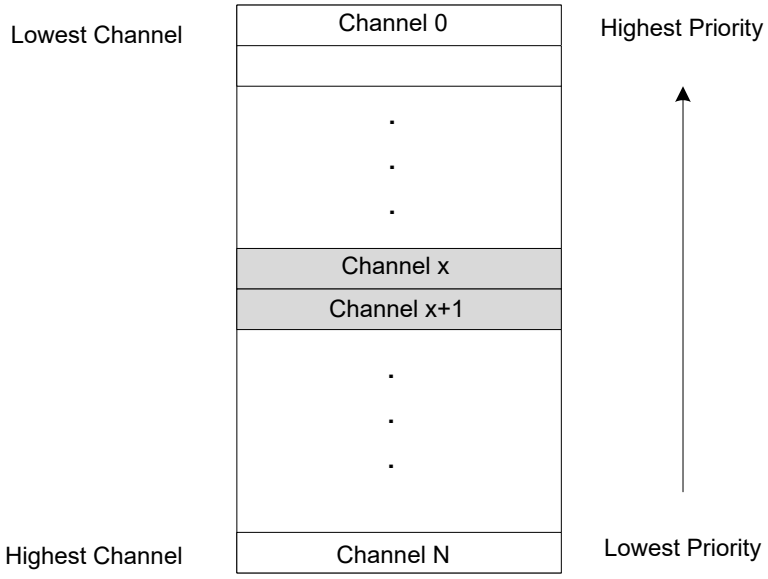

Dynamic Arbitration within a priority level is selected by writing a '1' to PRICTRL0.RRLVLENx.

The dynamic arbitration scheme in the DMAC is round-robin. With the round-robin scheme, the channel number of the last channel being granted access will have the lowest priority the next time the arbiter has to grant access to a channel within the same priority level, as shown in Figure 20-6. The channel number of the last channel being granted access as the active channel is stored in the Level x Channel Priority Number bit group in the Priority Control 0 register (PRICTRL0.LVLPRIx) for the corresponding priority level.

Figure 20-6. Dynamic (Round-Robin) Priority Scheduling

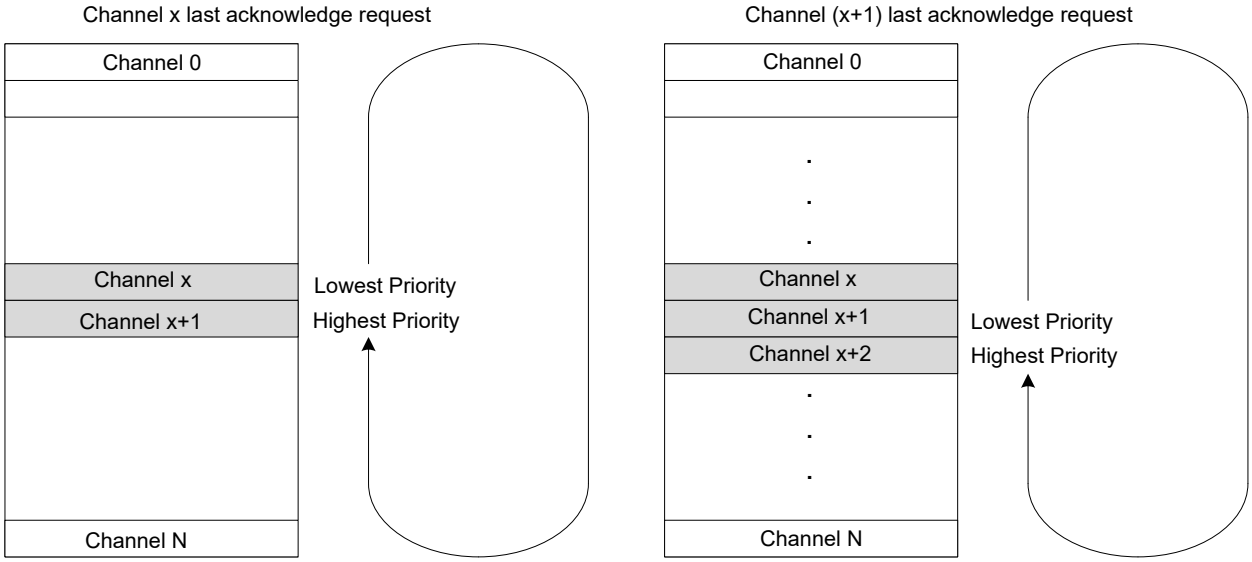

20.6.2.5 Data Transmission

Before the DMAC can perform a data transmission, a DMA channel has to be configured and enabled, its corresponding transfer descriptor has to be initialized, and the arbiter has to grant the DMA channel access as the active channel.

Once the arbiter has granted a DMA channel access as the active channel (refer to DMA Block Diagram section) the transfer descriptor for the DMA channel will be fetched from SRAM using the fetch bus, and stored in the internal memory for the active channel. For a new block transfer, the transfer descriptor will be fetched from the descriptor memory section (BASEADDR); For an ongoing block transfer, the descriptor will be fetched from the write-back

Downloaded from Arrow.com.

memory section (WRBADDR). By using the data transfer bus, the DMAC will read the data from the current source address and write it to the current destination address. For further details on how the current source and destination addresses are calculated, refer to the section on Addressing.

The arbitration procedure is performed after each burst transfer. If the current DMA channel is granted access again, the block transfer counter (BTCNT) of the internal transfer descriptor will be decremented by the number of beats in a burst transfer, the optional output event Beat will be generated if configured and enabled, and the active channel will perform a new burst transfer. If a different DMA channel than the current active channel is granted access, the block transfer counter value will be written to the write-back section before the transfer descriptor of the newly granted DMA channel is fetched into the internal memory of the active channel.

When a block transfer has come to its end (BTCNT is zero), the Valid bit in the Block Transfer Control register will be cleared (BTCTRL.VALID=0) before the entire transfer descriptor is written to the write-back memory. The optional interrupts, Channel Transfer Complete and Channel Suspend, and the optional output event Block, will be generated if configured and enabled. After the last block transfer in a transaction, the Next Descriptor Address register (DESCADDR) will hold the value 0x00000000, and the DMA channel will either be suspended or disabled, depending on the configuration in the Block Action bit group in the Block Transfer Control register (BTCTRL.BLOCKACT). If the transaction has further block transfers pending, DESCADDR will hold the SRAM address to the next transfer descriptor to be fetched. The DMAC will fetch the next descriptor into the internal memory of the active channel and write its content to the write-back section for the channel, before the arbiter gets to choose the next active channel.

20.6.2.6 Transfer Triggers and Actions

A DMA transfer through a DMA channel can be started only when a DMA transfer request is detected, and the DMA channel has been granted access to the DMA. A transfer request can be triggered from software, from a peripheral, or from an event. There are dedicated Trigger Source selections for each DMA Channel Control B (CHCTRLB.TRIGSRC).

The trigger actions are available in the Trigger Action bit group in the Channel Control B register (CHCTRLB.TRIGACT). By default, a trigger generates a request for a block transfer operation. If a single descriptor is defined for a channel, the channel is automatically disabled when a block transfer has been completed. If a list of linked descriptors is defined for a channel, the channel is automatically disabled when the last descriptor in the list is executed. If the list still has descriptors to execute, the channel will be waiting for the next block transfer trigger. When enabled again, the channel will wait for the next block transfer trigger. The trigger actions can also be configured to generate a request for a beat transfer (CHCTRLB.TRIGACT=0x2) or transaction transfer (CHCTRLB.TRIGACT=0x3) instead of a block transfer (CHCTRLB.TRIGACT=0x0).

Figure 20-7 shows an example where triggers are used with two linked block descriptors.

Downloaded from Arrow.com.

Figure 20-7. Trigger Action and Transfers

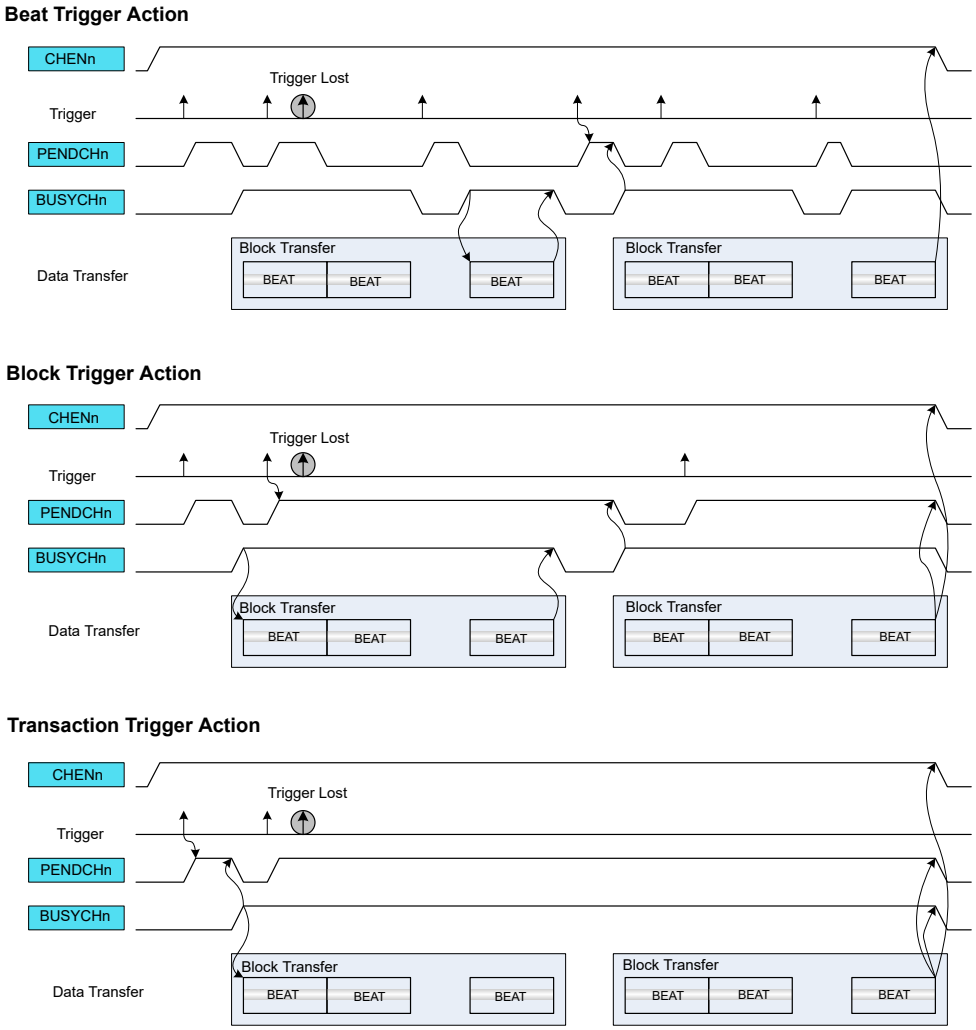

If the trigger source generates a transfer request for a channel during an ongoing transfer, the new transfer request will be kept pending (CHSTATUS.PEND=1), and the new transfer can start after the ongoing one is done. Only one pending transfer can be kept per channel. If the trigger source generates more transfer requests while one is already pending, the additional ones will be lost. All channels pending status flags are also available in the Pending Channels register (PENDCH).

When the transfer starts, the corresponding Channel Busy status flag is set in Channel Status register (CHSTATUS.BUSY). When the trigger action is complete, the Channel Busy status flag is cleared. All channel busy status flags are also available in the Busy Channels register (BUSYCH) in DMAC.

20.6.2.7 Addressing

Each block transfer needs to have both a source address and a destination address defined. The source address is set by writing the Transfer Source Address (SRCADDR) register, the destination address is set by writing the Transfer Destination Address (DSTADDR) register.

The addressing of this DMAC module can be static or incremental, for either source or destination of a block transfer, or both.

Incrementation for the source address of a block transfer is enabled by writing the Source Address Incrementation Enable bit in the Block Transfer Control register (BTCTRL.SRCINC=1). The step size of the incrementation is configurable and can be chosen by writing the Step Selection bit in the Block Transfer Control register (BTCTRL.STEPSEL=1) and writing the desired step size in the Address Increment Step Size bit group in the Block Transfer Control register (BTCTRL.STEPSIZE). If BTCTRL.STEPSEL=0, the step size for the source incrementation will be the size of one beat.

Downloaded from Arrow.com.

When source address incrementation is configured (BTCTRL.SRCINC=1), SRCADDR is calculated as follows:

If BTCTRL.STEPSEL=1:

$$\text{SRCADDR} = \text{SRCADDR}_{START} + BTCNT \cdot \left(BEATSIZE + 1\right) \cdot 2^{\text{STEPSIZE}}$$

If BTCTRL.STEPSEL=0:

$$\text{SRCADDR} = \text{SRCADDR}_{START} + BTCNT \cdot \left(BEATSIZE + 1\right)$$

- SRCADDR_{START} is the source address of the first beat transfer in the block transfer
- BTCNT is the initial number of beats remaining in the block transfer
- BEATSIZE is the configured number of bytes in a beat
- STEPSIZE is the configured number of beats for each incrementation

The following figure shows an example where DMA channel 0 is configured to increment the source address by one beat after each beat transfer (BTCTRL.SRCINC=1), and DMA channel 1 is configured to increment the source address by two beats (BTCTRL.SRCINC=1, BTCTRL.STEPSEL=1, and BTCTRL.STEPSIZE=0x1). As the destination address for both channels are peripherals, destination incrementation is disabled (BTCTRL.DSTINC=0).

Figure 20-8. Source Address Increment

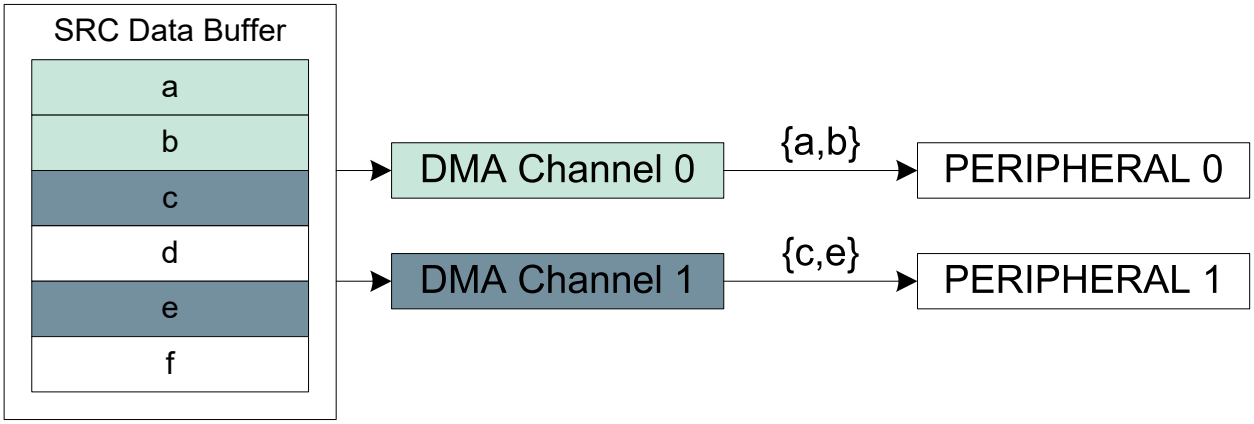

Incrementation for the destination address of a block transfer is enabled by setting the Destination Address Incrementation Enable bit in the Block Transfer Control register (BTCTRL.DSTINC=1). The step size of the incrementation is configurable by clearing BTCTRL.STEPSEL=0 and writing BTCTRL.STEPSIZE to the desired step size. If BTCTRL.STEPSEL=1, the step size for the destination incrementation will be the size of one beat.

When the destination address incrementation is configured (BTCTRL.DSTINC=1), DSTADDR must be set and calculated as follows:

$DSTADDR = DSTADDR_{START} + BTCNT \bullet \left(BEATSIZE + 1\right) \bullet 2^{STEPSIZE}$	where BTCTRL.STEPSEL is zero
$DSTADDR = DSTADDR_{START} + BTCNT \bullet \left(BEATSIZE + 1\right)$	where BTCTRL.STEPSEL is one

- DSTADDR_{START} is the destination address of the first beat transfer in the block transfer
- BTCNT is the initial number of beats remaining in the block transfer
- BEATSIZE is the configured number of bytes in a beat
- STEPSIZE is the configured number of beats for each incrementation

The followiong figure shows an example where DMA channel 0 is configured to increment destination address by one beat (BTCTRL.DSTINC=1) and DMA channel 1 is configured to increment destination address by two beats (BTCTRL.DSTINC=1, BTCTRL.STEPSEL=0, and BTCTRL.STEPSIZE=0x1). As the source address for both channels are peripherals, source incrementation is disabled (BTCTRL.SRCINC=0).

Downloaded from Arrow.com.

Figure 20-9. Destination Address Increment

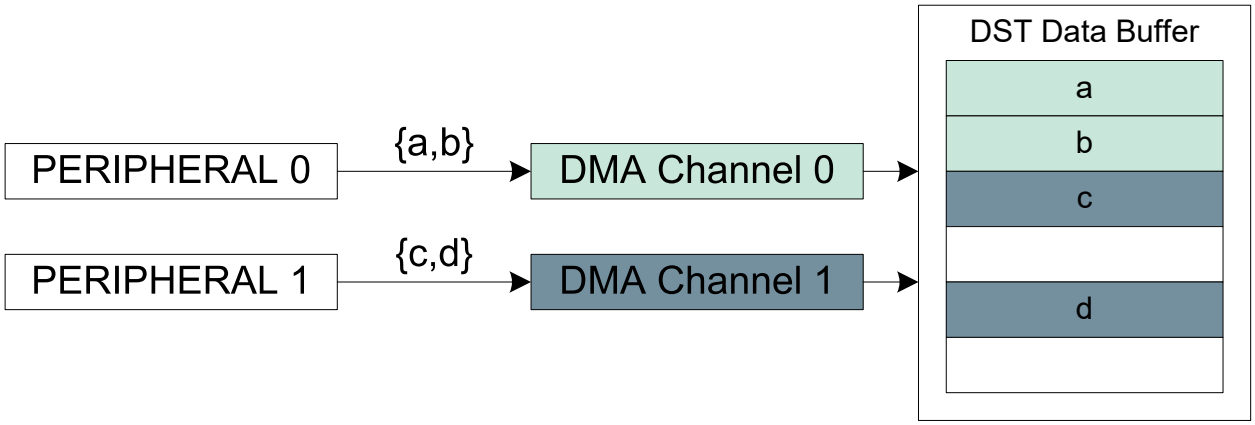

20.6.2.8 Error Handling

If a bus error is received from an AHB client during a DMA data transfer, the corresponding active channel is disabled and the corresponding Channel Transfer Error Interrupt flag in the Channel Interrupt Status and Clear register (CHINTFLAG.TERR) is set. If enabled, the optional transfer error interrupt is generated. The transfer counter will not be decremented and its current value is written-back in the write-back memory section before the channel is disabled.

When the DMAC fetches an invalid descriptor (BTCTRL.VALID=0) or when the channel is resumed and the DMA fetches the next descriptor with null address (DESCADDR=0x00000000), the corresponding channel operation is suspended, the Channel Suspend Interrupt Flag in the Channel Interrupt Flag Status and Clear register (CHINTFLAG.SUSP) is set, and the Channel Fetch Error bit in the Channel Status register (CHSTATUS.FERR) is set. If enabled, the optional suspend interrupt is generated.

20.6.3 Additional Features

20.6.3.1 Linked Descriptors

A transaction can consist of either a single block transfer or of several block transfers. When a transaction consists of several block transfers it is done with the help of linked descriptors.

Figure 20-3 illustrates how linked descriptors work. When the first block transfer is completed on DMA channel 0, the DMAC fetches the next transfer descriptor, which is pointed to by the value stored in the Next Descriptor Address (DESCADDR) register of the first transfer descriptor. Fetching the next transfer descriptor (DESCADDR) is continued until the last transfer descriptor. When the block transfer for the last transfer descriptor is executed and DESCADDR=0x00000000, the transaction is terminated. For further details on how the next descriptor is fetched from SRAM, refer to section 20.6.2.5 Data Transmission.

20.6.3.1.1 Adding Descriptor to the End of a List

To add a new descriptor at the end of the descriptor list, create the descriptor in SRAM, with DESCADDR=0x00000000 indicating that it is the new last descriptor in the list, and modify the DESCADDR value of the current last descriptor to the address of the newly created descriptor.

20.6.3.1.2 Modifying a Descriptor in a List

In order to add descriptors to a linked list, the following actions must be performed:

1. Enable the Suspend interrupt for the DMA channel.
2. Enable the DMA channel.
3. Reserve memory space in SRAM to configure a new descriptor.
4. Configure the new descriptor:
   - Set the next descriptor address (DESCADDR)
   - Set the destination address (DSTADDR)
   - Set the source address (SRCADDR)
   - Configure the block transfer control (BTCTRL) including
     - Optionally enable the Suspend block action

Downloaded from Arrow.com.

- Set the descriptor VALID bit

5. Clear the VALID bit for the existing list and for the descriptor which has to be updated.
6. Read DESCADDR from the Write-Back memory.
   – If the DMA has not already fetched the descriptor which requires changes (i.e., DESCADDR is wrong):
     - Update the DESCADDR location of the descriptor from the List
     - Optionally clear the Suspend block action
     - Set the descriptor VALID bit to '1'
     - Optionally enable the Resume software command
   – If the DMA is executing the same descriptor as the one which requires changes:
     - Set the Channel Suspend software command and wait for the Suspend interrupt
     - Update the next descriptor address (DESCRADDR) in the write-back memory
     - Clear the interrupt sources and set the Resume software command
     - Update the DESCADDR location of the descriptor from the List
     - Optionally clear the Suspend block action
     - Set the descriptor VALID bit to '1'
7. Go to step 4 if needed.

20.6.3.1.3 Adding a Descriptor Between Existing Descriptors

To insert a new descriptor 'C' between two existing descriptors ('A' and 'B'), the descriptor currently executed by the DMA must be identified.

1. If DMA is executing descriptor B, descriptor C cannot be inserted.
2. If DMA has not started to execute descriptor A, follow the steps:
   a. Set the descriptor A VALID bit to '0'.
   b. Set the DESCADDR value of descriptor A to point to descriptor C instead of descriptor B.
   c. Set the DESCADDR value of descriptor C to point to descriptor B.
   d. Set the descriptor A VALID bit to '1'.
3. If DMA is executing descriptor A:
   a. Apply the software suspend command to the channel and
   b. Perform steps 2.1 through 2.4.
   c. Apply the software resume command to the channel.

20.6.3.2 Channel Suspend

The channel operation can be suspended at any time by software by writing a '1' to the Suspend command in the Command bit field of Channel Control B register (CHCTRLB.CMD). After the ongoing burst transfer is completed, the channel operation is suspended and the suspend command is automatically cleared.

When suspended, the Channel Suspend Interrupt flag in the Channel Interrupt Status and Clear register is set (CHINTFLAG.SUSP=1) and the optional suspend interrupt is generated.

By configuring the block action to suspend by writing Block Action bit group in the Block Transfer Control register (BTCTRL.BLOCKACT is 0x2 or 0x3), the DMA channel will be suspended after it has completed a block transfer. The DMA channel will be kept enabled and will be able to receive transfer triggers, but it will be removed from the arbitration scheme.

If an invalid transfer descriptor (BTCTRL.VALID=0) is fetched from SRAM, the DMA channel will be suspended, and the Channel Fetch Error bit in the Channel Status register(CHASTATUS.FERR) will be set.

Note: Only enabled DMA channels can be suspended. If a channel is disabled when it is attempted to be suspended, the internal suspend command will be ignored.

For more details on transfer descriptors, refer to section 20.6.2.3 Transfer Descriptors.

20.6.3.3 Channel Resume and Next Suspend Skip

A channel operation can be resumed by software by setting the Resume command in the Command bit field of the Channel Control B register (CHCTRLB.CMD). If the channel is already suspended, the channel operation resumes from where it previously stopped when the Resume command is detected. When the Resume command is

Downloaded from Arrow.com.

issued before the channel is suspended, the next suspend action is skipped and the channel continues the normal operation.

Figure 20-10. Channel Suspend/Resume Operation

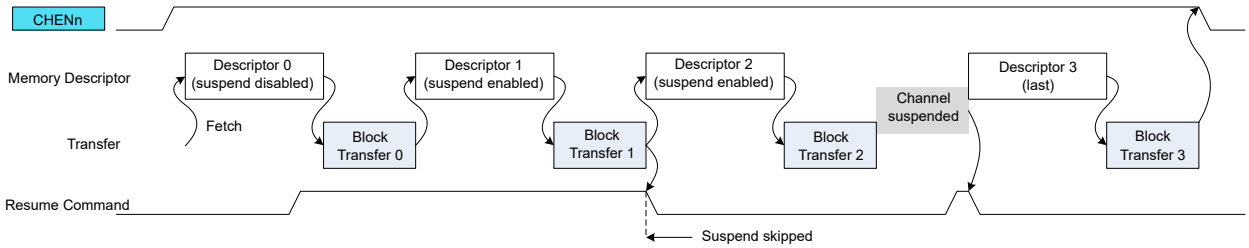

20.6.3.4 Event Input Actions

The event input actions are available only on the least significant DMA channels. For details on channels with event input support, refer to the in the Event system documentation.

Before using event input actions, the event controller must be configured first according to the following table, and the Channel Event Input Enable bit in the Channel Control B register (CHCTRLB.EVIE) must be written to '1'. Refer also to 20.6.6 Events.

Table 20-1. Event Input Action

Action	CHCTRLB.EVACT	CHCTRLB.TRGSRC
None	NOACT	-
Normal Transfer	TRIG	DISABLE
Conditional Transfer on Strobe	TRIG	any peripheral
Conditional Transfer	CTRIG	
Conditional Block Transfer	CBLOCK	
Channel Suspend	SUSPEND	
Channel Resume	RESUME	
Skip Next Block Suspend	SSKIP	

Normal Transfer

The event input is used to trigger a beat or burst transfer on peripherals.

The event is acknowledged as soon as the event is received. When received, both the Channel Pending status bit in the Channel Status register (CHSTATUS.PEND) and the corresponding Channel n bit in the Pending Channels register (20.8.13 PENDCH.PENDCHn) are set. If the event is received while the channel is pending, the event trigger is lost.

The figure below shows an example where beat transfers are enabled by internal events.

Downloaded from Arrow.com.

Figure 20-11. Beat Event Trigger Action

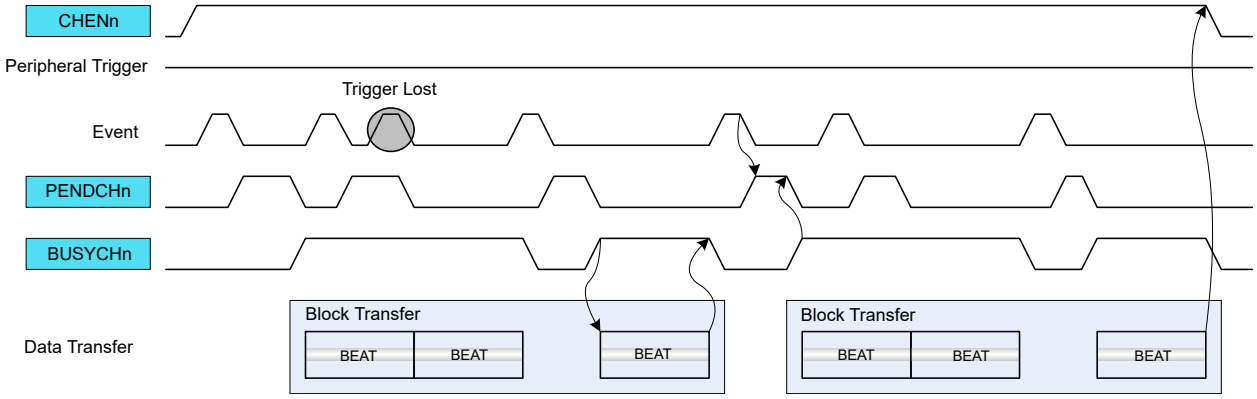

Conditional Transfer on Strobe

The event input is used to trigger a transfer on peripherals with pending transfer requests. This event action is intended to be used with peripheral triggers, e.g. for timed communication protocols or periodic transfers between peripherals: only when the peripheral trigger coincides with the occurrence of a (possibly cyclic) event the transfer is issued.

The event is acknowledged as soon as the event is received. The peripheral trigger request is stored internally when the previous trigger action is completed (i.e. the channel is not pending) and when an active event is received. If the peripheral trigger is active, the DMA will wait for an event before the peripheral trigger is internally registered. When both event and peripheral transfer trigger are active, both CHSTATUS.PEND and 20.8.13 PENDCH.PENDCHn are set. A software trigger will now trigger a transfer.

The figure below shows an example where the peripheral beat transfer is started by a conditional strobe event action.

Figure 20-12. Periodic Event with Beat Peripheral Triggers

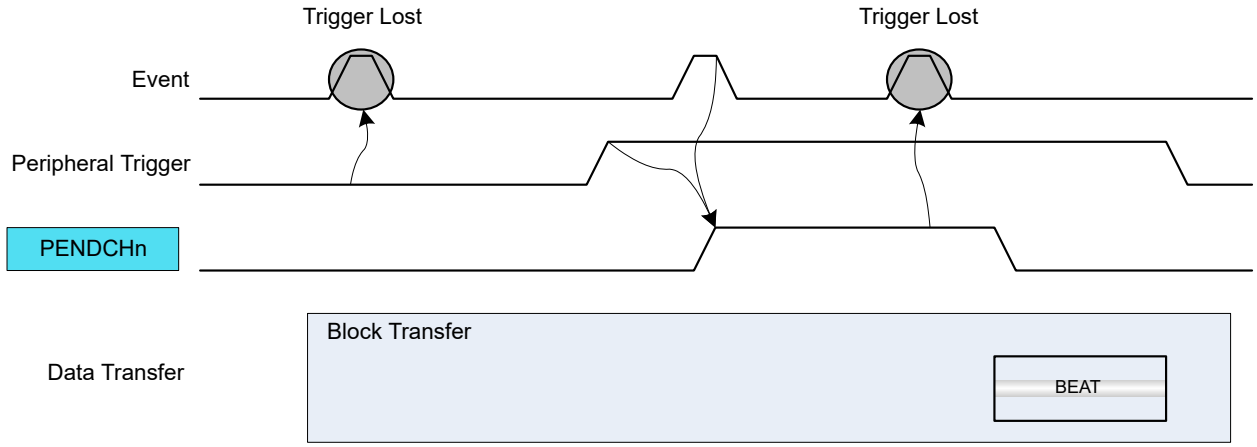

Conditional Transfer

The event input is used to trigger a conditional transfer on peripherals with pending transfer requests. For example, this type of event can be used for peripheral-to-peripheral transfers, where one peripheral is the source of event and the second peripheral is the source of the trigger.

Each peripheral trigger is stored internally when the event is received. When the peripheral trigger is stored internally, the Channel Pending status bit is set (CHSTATUS.PEND), the respective Pending Channel n Bit in the Pending Channels register is set (20.8.13 PENDCH.PENDCHn), and the event is acknowledged. A software trigger will now trigger a transfer.

The figure below shows an example where conditional event is enabled with peripheral beat trigger requests.

Downloaded from Arrow.com.

Figure 20-13. Conditional Event with Beat Peripheral Triggers

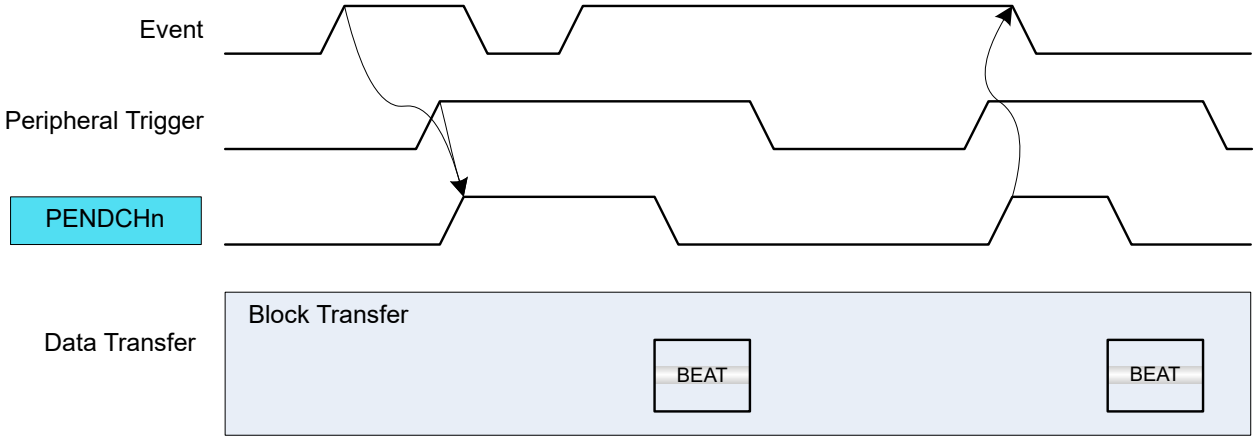

Conditional Block Transfer
The event input is used to trigger a conditional block transfer on peripherals.

Before starting transfers within a block, an event must be received. When received, the event is acknowledged when the block transfer is completed. A software trigger will trigger a transfer.

The figure below shows an example where conditional event block transfer is started with peripheral beat trigger requests.

Figure 20-14. Conditional Block Transfer with Beat Peripheral Triggers

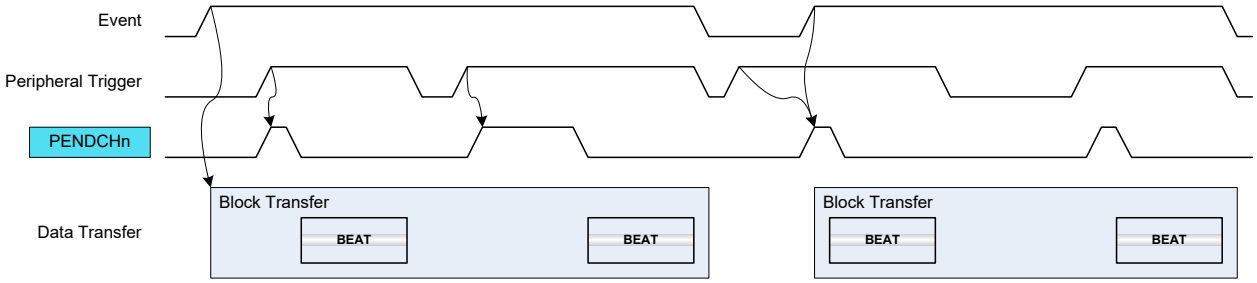

Channel Suspend
The event input is used to suspend an ongoing channel operation. The event is acknowledged when the current AHB access is completed. For further details on Channel Suspend, refer to 20.6.3.2 Channel Suspend.

Channel Resume
The event input is used to resume a suspended channel operation. The event is acknowledged as soon as the event is received and the Channel Suspend Interrupt Flag (CHINTFLAG.SUSP) is cleared. For further details refer to 20.6.3.2 Channel Suspend.

Skip Next Block Suspend
This event can be used to skip the next block suspend action. If the channel is suspended before the event rises, the channel operation is resumed and the event is acknowledged. If the event rises before a suspend block action is detected, the event is kept until the next block suspend detection. When the block transfer is completed, the channel continues the operation (not suspended) and the event is acknowledged.

Related Links
24.8.3 USER

20.6.3.5 Event Output Selection

Event output selection is available only for the least significant DMA channels. The pulse width of an event output from a channel is one AHB clock cycle.

Downloaded from Arrow.com.

The output of channel events is enabled by writing a '1' to the Channel Event Output Enable bit in the Control B register (CHCTRLB.EVOE). The event output cause is selected by writing to the Event Output Selection bits in the Block Transfer Control register (BTCTRL.EVOSEL). It is possible to generate events after each block transfer (BTCTRL.EVOSEL=0x1) or beat transfer (BTCTRL.EVOSEL=0x3). To enable an event being generated when a transaction is complete, the block event selection must be set in the last transfer descriptor only.

Figure 20-15 shows an example where the event output generation is enabled in the first block transfer, and disabled in the second block.

Figure 20-15. Event Output Generation

Beat Event Output

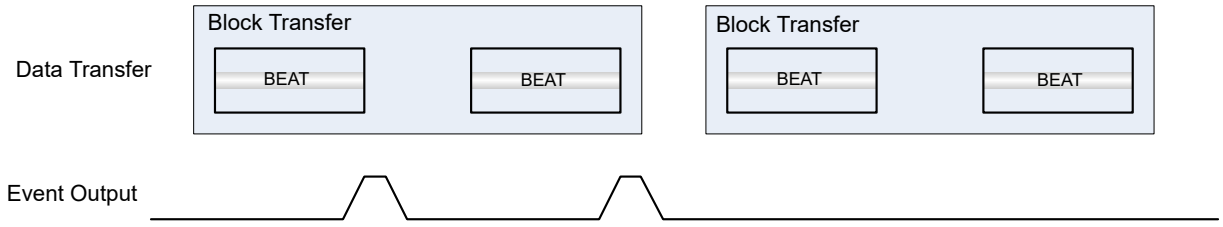

Block Event Output

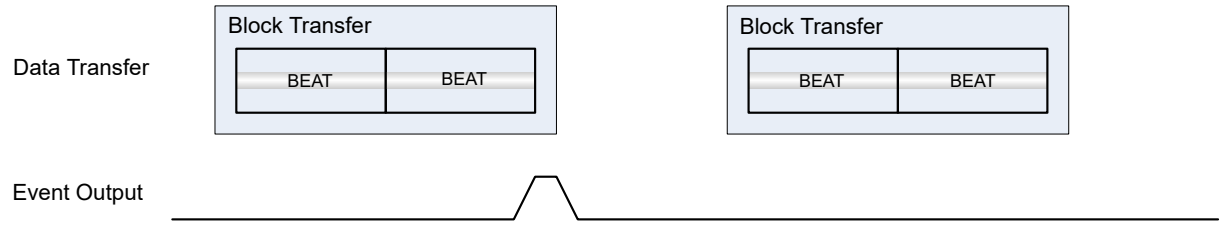

20.6.3.6 Aborting Transfers

Transfers on any channel can be aborted gracefully by software by disabling the corresponding DMA channel. It is also possible to abort all ongoing or pending transfers by disabling the DMAC.

When a DMA channel disable request or DMAC disable request is detected:

- Ongoing transfers of the active channel will be disabled when the ongoing beat transfer is completed and the write-back memory section is updated. This prevents transfer corruption before the channel is disabled.
- All other enabled channels will be disabled in the next clock cycle.

The corresponding Channel Enable bit in the Channel Control A register is cleared (CHCTRLA.ENABLE=0) when the channel is disabled.

The corresponding DMAC Enable bit in the Control register is cleared (CTRL.DMAENABLE=0) when the entire DMAC module is disabled.

20.6.3.7 CRC Operation

A cyclic redundancy check (CRC) is an error detection technique used to find errors in data. It is commonly used to determine whether the data during a transmission, or data present in data and program memories has been corrupted or not. A CRC takes a data stream or a block of data as input and generates a 16- or 32-bit output that can be appended to the data and used as a checksum.

When the data is received, the device or application repeats the calculation: If the new CRC result does not match the one calculated earlier, the block contains a data error. The application will then detect this and may take a corrective action, such as requesting the data to be sent again or simply not using the incorrect data.

Downloaded from Arrow.com.

The CRC engine in DMAC supports two commonly used CRC polynomials: CRC-16 (CRC-CCITT) and CRC-32 (IEEE 802.3). Typically, applying CRC-n (CRC-16 or CRC-32) to a data block of arbitrary length will detect any single alteration that is ≤n bits in length, and will detect the fraction 1-2-n of all longer error bursts.

- CRC-16:
  - Polynomial: $x^{16}+ x^{12}+ x^5+ 1$
  - Hex value: 0x1021
- CRC-32:
  - Polynomial: $x^{32}+x^{26}+ x^{23}+ x^{22}+x^{16}+ x^{12}+ x^{11}+ x^{10}+ x^8+ x^7+ x^5+ x^4+ x^2+ x + 1$
  - Hex value: 0x04C11DB7

The data source for the CRC engine can either be one of the DMA channels or the APB bus interface, and must be selected by writing to the CRC Input Source bits in the CRC Control register (CRCCTRL.CRCSRC). The CRC engine then takes data input from the selected source and generates a checksum based on these data. The checksum is available in the CRC Checksum register (CRCCHKSUM). When CRC-32 polynomial is used, the final checksum read is bit reversed and complemented, as shown in Figure 20-16.

The CRC polynomial is selected by writing to the CRC Polynomial Type bit in the CRC Control register (CRCCTRL.CRCPOLY), the default is CRC-16. The CRC engine operates on byte only. When the DMA is used as data source for the CRC engine, the DMA channel beat size setting will be used. When used with APB bus interface, the application must select the CRC Beat Size bit field of CRC Control register (CRCCTRL.CRCBEATSIZE). 8-, 16-, or 32-bit bus transfer access type is supported. The corresponding number of bytes will be written in the CRCDATAIN register and the CRC engine will operate on the input data in a byte by byte manner.

Figure 20-16. CRC Generator Block Diagram

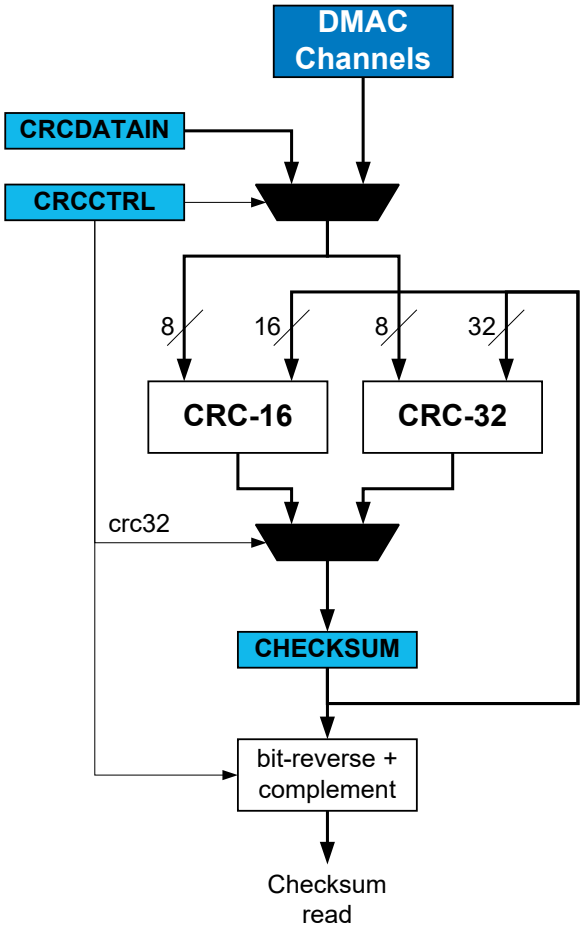

Downloaded from Arrow.com.

CRC on DMA data	CRC-16 or CRC-32 calculations can be performed on data passing through any DMA channel. Once a DMA channel is selected as the source, the CRC engine will continuously generate the CRC on the data passing through the DMA channel. The checksum is available for readout once the DMA transaction is completed or aborted. A CRC can also be generated on SRAM, Flash, or I/O memory by passing these data through a DMA channel. If the latter is done, the destination register for the DMA data can be the data input (CRCDATAIN) register in the CRC engine.
CRC using the I/O interface	Before using the CRC engine with the I/O interface, the application must set the CRC Beat Size bits in the CRC Control register (CRCCTRL.CRCBEATSIZE). 8/16/32-bit bus transfer type can be selected.

CRC can be performed on any data by loading them into the CRC engine using the CPU and writing the data to the CRCDATAIN register. Using this method, an arbitrary number of bytes can be written to the register by the CPU, and CRC is done continuously for each byte. This means if a 32-bit data is written to the CRCDATAIN register the CRC engine takes four cycles to calculate the CRC. The CRC complete is signaled by a set CRCBUSY bit in the CRCSTATUS register. New data can be written only when CRCBUSY flag is not set.

20.6.4 DMA Operation

Not applicable.

20.6.5 Interrupts

The DMAC channels have the following interrupt sources:

- Transfer Complete (TCMPL): Indicates that a block transfer is completed on the corresponding channel. Refer to 20.6.2.5 Data Transmission for details.
- Transfer Error (TERR): Indicates that a bus error has occurred during a burst transfer, or that an invalid descriptor has been fetched. Refer to 20.6.2.8 Error Handling for details.
- Channel Suspend (SUSP): Indicates that the corresponding channel has been suspended. Refer to 20.6.3.2 Channel Suspend and 20.6.2.5 Data Transmission for details.

Each interrupt source has an interrupt flag associated with it. The interrupt flag in the Channel Interrupt Flag Status and Clear (CHINTFLAG) register is set when the interrupt condition occurs. Each interrupt can be individually enabled by setting the corresponding bit in the Channel Interrupt Enable Set register (CHINTENSET=1), and disabled by setting the corresponding bit in the Channel Interrupt Enable Clear register (CHINTENCLR=1).

An interrupt request is generated when the interrupt flag is set and the corresponding interrupt is enabled. The interrupt request remains active until the interrupt flag is cleared, the interrupt is disabled, the DMAC is reset or the corresponding DMA channel is reset. See CHINTFLAG for details on how to clear interrupt flags. All interrupt requests are ORed together on system level to generate one combined interrupt request to the NVIC.

The user must read the Channel Interrupt Status (INTSTATUS) register to identify the channels with pending interrupts and must read the Channel Interrupt Flag Status and Clear (CHINTFLAG) register to determine which interrupt condition is present for the corresponding channel. It is also possible to read the Interrupt Pending register (INTPEND), which provides the lowest channel number with pending interrupt and the respective interrupt flags.

Note: Interrupts must be globally enabled for interrupt requests to be generated.

Related Links

11.2 Nested Vector Interrupt Controller

20.6.6 Events

The DMAC can generate the following output events:

- Channel (CH): Generated when a block transfer for a given channel has been completed, or when a beat transfer within a block transfer for a given channel has been completed. Refer to *Event Output Selection* for details.

Setting the Channel Event Output Enable bit (CHCTRLB.EVOE = 1) enables the corresponding output event configured in the Event Output Selection bit group in the Block Transfer Control register (BTCTRL.EVOSEL). Clearing CHCTRLB.EVOE = 0 disables the corresponding output event.

The DMAC can take the following actions on an input event:

Downloaded from Arrow.com.

- Transfer and Periodic Transfer Trigger (TRIG): normal transfer or periodic transfers on peripherals are enabled
- Conditional Transfer Trigger (CTRIG): conditional transfers on peripherals are enabled
- Conditional Block Transfer Trigger (CBLOCK): conditional block transfers on peripherals are enabled
- Channel Suspend Operation (SUSPEND): suspend a channel operation
- Channel Resume Operation (RESUME): resume a suspended channel operation
- Skip Next Block Suspend Action (SSKIP): skip the next block suspend transfer condition
- Increase Priority (INCPRI): increase channel priority

Setting the Channel Event Input Enable bit (CHEVCTRLx.EVIE = 1) enables the corresponding action on input event. Clearing this bit disables the corresponding action on input event. Note that several actions can be enabled for incoming events. If several events are connected to the peripheral, any enabled action will be taken for any of the incoming events. For further details on event input actions, refer to *Event Input Actions*.
Note: Event input and outputs are not available for every channel. Refer to the Features section for more information.

Related Links
24. EVSYS – Event System

20.6.7 Sleep Mode Operation

The DMAC will continue to operate in IDLE 0 sleep mode. It does not perform transfers in IDLE 1 and IDLE 2 sleep modes, since the AHB clocks are stopped. In Standby Sleep mode, the DMAC will be internally disabled, but maintains its current configuration.

20.6.8 Synchronization

Not applicable.

Downloaded from Arrow.com.

20.7 Register Summary

Offset	Name	Bit Pos.	7	6	5	4	3	2	1	0
0x00	CTRL	7:0						CRCENABLE	DMAENABLE	SWRST
		15:8					LVLENx3	LVLENx2	LVLENx1	LVLENx0
0x02	CRCCTRL	7:0					CRCPOLY[1:0]		CRCBEATSIZE[1:0]	
		15:8			CRCSRC[5:0]					
0x04	CRCDATAIN	7:0	CRCDATAIN[7:0]							
		15:8	CRCDATAIN[15:8]							
		23:16	CRCDATAIN[23:16]							
		31:24	CRCDATAIN[31:24]							
0x08	CRCCHKSUM	7:0	CRCCHKSUM[7:0]							
		15:8	CRCCHKSUM[15:8]							
		23:16	CRCCHKSUM[23:16]							
		31:24	CRCCHKSUM[31:24]							
0x0C	CRCSTATUS	7:0							CRCZERO	CRCBUSY
0x0D	DBGCTRL	7:0								DBGRUN
0x0E	QOSCTRL	7:0			DQOS[1:0]		FQOS[1:0]		WRBQOS[1:0]	
0x0F	Reserved									
0x10	SWTRIGCTRL	7:0	SWTRIGn[7:0]							
		15:8					SWTRIGn[11:8]			
		23:16								
		31:24								
0x14	PRICTRL0	7:0	RRLVLEN0				LVLPRI0[3:0]			
		15:8	RRLVLEN1				LVLPRI1[3:0]			
		23:16	RRLVLEN2				LVLPRI2[3:0]			
		31:24	RRLVLEN3				LVLPRI3[3:0]			
0x18 ... 0x1F	Reserved									
0x20	INTPEND	7:0					ID[3:0]			
		15:8	PEND	BUSY	FERR			SUSP	TCMPL	TERR
0x22 ... 0x23	Reserved									
0x24	INTSTATUS	7:0	CHINTn[7:0]							
		15:8					CHINTn[11:8]			
		23:16								
		31:24								
0x28	BUSYCH	7:0	BUSYCHn[7:0]							
		15:8					BUSYCHn[11:8]			
		23:16								
		31:24								
0x2C	PENDCH	7:0	PENDCH7	PENDCH6	PENDCH5	PENDCH4	PENDCH3	PENDCH2	PENDCH1	PENDCH0
		15:8					PENDCH11	PENDCH10	PENDCH9	PENDCH8
		23:16								
		31:24								
0x30	ACTIVE	7:0					LVLEXx	LVLEXx	LVLEXx	LVLEXx
		15:8	ABUSY			ID[4:0]				
		23:16	BTCNT[7:0]							
		31:24	BTCNT[15:8]							
0x34	BASEADDR	7:0	BASEADDR[7:0]							
		15:8	BASEADDR[15:8]							
		23:16	BASEADDR[23:16]							
		31:24	BASEADDR[31:24]							
0x38	WRBADDR	7:0	WRBADDR[7:0]							
		15:8	WRBADDR[15:8]							
		23:16	WRBADDR[23:16]							
		31:24	WRBADDR[31:24]							

Downloaded from Arrow.com.

.....continued

Offset	Name	Bit Pos.	7	6	5	4	3	2	1	0
0x3C ... 0x3E	Reserved									
0x3F	CHID	7:0					ID[3:0]			
0x40	CHCTRLA	7:0							ENABLE	SWRST
0x41 ... 0x43	Reserved									
0x44	CHCTRLB	7:0		LVL[1:0]		EVOE	EVIE	EVACT[2:0]		
		15:8			TRIGSRC[5:0]					
		23:16	TRIGACT[1:0]							
		31:24							CMD[1:0]	
0x48 ... 0x4B	Reserved									
0x4C	CHINTENCLR	7:0						SUSP	TCMPL	TERR
0x4D	CHINTENSET	7:0						SUSP	TCMPL	TERR
0x4E	CHINTFLAG	7:0						SUSP	TCMPL	TERR
0x4F	CHSTATUS	7:0						FERR	BUSY	PEND

20.8 Register Description

Registers can be 8, 16, or 32 bits wide. Atomic 8-, 16- and 32-bit accesses are supported. In addition, the 8-bit quarters and 16-bit halves of a 32-bit register, and the 8-bit halves of a 16-bit register can be accessed directly.

Some registers are optionally write-protected by the Peripheral Access Controller (PAC). Optional PAC write-protection is denoted by the "PAC Write-Protection" property in each individual register description. For details, refer to 20.5.8 Register Access Protection.

Some registers are enable-protected, meaning they can only be written when the peripheral is disabled. Enable-protection is denoted by the "Enable-Protected" property in each individual register description.

Downloaded from Arrow.com.

20.8.1 Control

Name: CTRL
Offset: 0x00
Reset: 0x00X0
Property: PAC Write-Protection, Enable-Protected

Bit	15	14	13	12	11	10	9	8
					LVLENx3	LVLENx2	LVLENx1	LVLENx0
Access					R/W	R/W	R/W	R/W
Reset					0	0	0	0

Bit	7	6	5	4	3	2	1	0
						CRCENABLE	DMAENABLE	SWRST
Access						R/W	R/W	R/W
Reset						0	0	0

Bits 8, 9, 10, 11 – LVLENx Priority Level x Enable
When this bit is set, all requests with the corresponding level will be fed into the arbiter block. When cleared, all requests with the corresponding level will be ignored.
For details on arbitration schemes, refer to the Arbitration section.
These bits are not enable-protected.

Value	Description
0	Transfer requests for Priority level x will not be handled.
1	Transfer requests for Priority level x will be handled.

Bit 2 – CRCENABLE CRC Enable
Writing a '0' to this bit will disable the CRC calculation when the CRC Status Busy flag is cleared (CRCSTATUS. CRCBUSY). The bit is zero when the CRC is disabled.
Writing a '1' to this bit will enable the CRC calculation.

Value	Description
0	The CRC calculation is disabled.
1	The CRC calculation is enabled.

Bit 1 – DMAENABLE DMA Enable
Setting this bit will enable the DMA module.
Writing a '0' to this bit will disable the DMA module. When writing a '0' during an ongoing transfer, the bit will not be cleared until the internal data transfer buffer is empty and the DMA transfer is aborted. The internal data transfer buffer will be empty once the ongoing burst transfer is completed.
This bit is not enable-protected.

Value	Description
0	The peripheral is disabled.
1	The peripheral is enabled.

Bit 0 – SWRST Software Reset
Writing a '0' to this bit has no effect.
Writing a '1' to this bit when both the DMAC and the CRC module are disabled (DMAENABLE and CRCENABLE are '0') resets all registers in the DMAC (except DBGCTRL) to their initial state. If either the DMAC or CRC module is enabled, the Reset request will be ignored and the DMAC will return an access error.

Value	Description
0	There is no Reset operation ongoing.
1	A Reset operation is ongoing.

Downloaded from Arrow.com.

20.8.2 CRC Control

Name: CRCCTRL
Offset: 0x02
Reset: 0x0000
Property: PAC Write-Protection, Enable-Protected

Bit	15	14	13	12	11	10	9	8
			CRCSRC[5:0]					
Access			R/W	R/W	R/W	R/W	R/W	R/W
Reset			0	0	0	0	0	0

Bit	7	6	5	4	3	2	1	0
					CRCPOLY[1:0]		CRCBEATSIZE[1:0]	
Access					R/W	R/W	R/W	R/W
Reset					0	0	0	0

Bits 13:8 – CRCSRC[5:0] CRC Input Source
These bits select the input source for generating the CRC, as shown in the table below. The selected source is locked until either the CRC generation is completed or the CRC module is disabled. This means the CRCSRC cannot be modified when the CRC operation is ongoing. The lock is signaled by the CRCBUSY Status bit. CRC generation complete is generated and signaled from the selected source when used with the DMA channel.

Value	Name	Description
0x00	NOACT	No action
0x01	IO	I/O interface
0x02-0x1F	-	Reserved
0x20	CHN	DMA channel 0
0x21	CHN	DMA channel 1
0x22	CHN	DMA channel 2
0x23	CHN	DMA channel 3
0x24	CHN	DMA channel 4
0x25	CHN	DMA channel 5
0x26	CHN	DMA channel 6
0x27	CHN	DMA channel 7
0x28	CHN	DMA channel 8
0x29	CHN	DMA channel 9
0x2A	CHN	DMA channel 10
0x2B	CHN	DMA channel 11

Bits 3:2 – CRCPOLY[1:0] CRC Polynomial Type
These bits define the size of the data transfer for each bus access when the CRC is used with I/O interface, as shown in the table below.

Value	Name	Description
0x0	CRC16	CRC-16 (CRC-CCITT)
0x1	CRC32	CRC32 (IEEE 802.3)
0x2-0x3		Reserved

Bits 1:0 – CRCBEATSIZE[1:0] CRC Beat Size
These bits define the size of the data transfer for each bus access when the CRC is used with I/O interface.

Value	Name	Description
0x0	BYTE	8-bit bus transfer
0x1	HWORD	16-bit bus transfer
0x2	WORD	32-bit bus transfer
0x3		Reserved

Downloaded from Arrow.com.

20.8.3 CRC Data Input

Name: CRCDATAIN
Offset: 0x04
Reset: 0x00000000
Property: PAC Write-Protection

Bit	31	30	29	28	27	26	25	24
	CRCDATAIN[31:24]							
Access	R/W	R/W	R/W	R/W	R/W	R/W	R/W	R/W
Reset	0	0	0	0	0	0	0	0

Bit	23	22	21	20	19	18	17	16
	CRCDATAIN[23:16]							
Access	R/W	R/W	R/W	R/W	R/W	R/W	R/W	R/W
Reset	0	0	0	0	0	0	0	0

Bit	15	14	13	12	11	10	9	8
	CRCDATAIN[15:8]							
Access	R/W	R/W	R/W	R/W	R/W	R/W	R/W	R/W
Reset	0	0	0	0	0	0	0	0

Bit	7	6	5	4	3	2	1	0
	CRCDATAIN[7:0]							
Access	R/W	R/W	R/W	R/W	R/W	R/W	R/W	R/W
Reset	0	0	0	0	0	0	0	0

Bits 31:0 – CRCDATAIN[31:0] CRC Data Input
These bits store the data for which the CRC checksum is computed. A new CRC Checksum is ready (CRCBEAT+ 1) clock cycles after the CRCDATAIN register is written.

Downloaded from Arrow.com.

20.8.4 CRC Checksum

Name: CRCCHKSUM
Offset: 0x08
Reset: 0x00000000
Property: PAC Write-Protection, Enable-Protected

The CRCCHKSUM represents the 16- or 32-bit checksum value and the generated CRC. The register is reset to zero by default, but it is possible to reset all bits to one by writing the CRCCHKSUM register directly. It is possible to write this register only when the CRC module is disabled. If CRC-32 is selected and the CRC Status Busy flag is cleared (i.e., CRC generation is completed or aborted), the bit reversed (bit 31 is swapped with bit 0, bit 30 with bit 1, etc.) and complemented result will be read from CRCCHKSUM. If CRC-16 is selected or the CRC Status Busy flag is set (i.e., CRC generation is ongoing), CRCCHKSUM will contain the actual content.

Bit	31	30	29	28	27	26	25	24
	CRCCHKSUM[31:24]							
Access	R/W	R/W	R/W	R/W	R/W	R/W	R/W	R/W
Reset	0	0	0	0	0	0	0	0

Bit	23	22	21	20	19	18	17	16
	CRCCHKSUM[23:16]							
Access	R/W	R/W	R/W	R/W	R/W	R/W	R/W	R/W
Reset	0	0	0	0	0	0	0	0

Bit	15	14	13	12	11	10	9	8
	CRCCHKSUM[15:8]							
Access	R/W	R/W	R/W	R/W	R/W	R/W	R/W	R/W
Reset	0	0	0	0	0	0	0	0

Bit	7	6	5	4	3	2	1	0
	CRCCHKSUM[7:0]							
Access	R/W	R/W	R/W	R/W	R/W	R/W	R/W	R/W
Reset	0	0	0	0	0	0	0	0

Bits 31:0 – CRCCHKSUM[31:0] CRC Checksum
These bits store the generated CRC result. The 16 MSB bits are always read zero when CRC-16 is enabled.

Downloaded from Arrow.com.

20.8.5 CRC Status

Name: CRCSTATUS
Offset: 0x0C
Reset: 0x00
Property: PAC Write-Protection

Bit	7	6	5	4	3	2	1	0
							CRCZERO	CRCBUSY
Access							R	R/W
Reset							0	0

Bit 1 – CRCZERO CRC Zero
This bit is cleared when a new CRC source is selected.
This bit is set when the CRC generation is complete and the CRC Checksum is zero.
When running CRC-32 and appending the checksum at the end of the packet (as little endian), the final checksum should be 0x2144df1c, and not zero. However, if the checksum is complemented before it is appended (as little endian) to the data, the final result in the checksum register will be zero. See the description of CRCCHKSUM to read out different versions of the checksum.

Bit 0 – CRCBUSY CRC Module Busy
This flag is cleared by writing a one to it when used with I/O interface. When used with a DMA channel, the bit is set when the corresponding DMA channel is enabled, and cleared when the corresponding DMA channel is disabled. This register bit cannot be cleared by the application when the CRC is used with a DMA channel.
This bit is set when a source configuration is selected and as long as the source is using the CRC module.

Downloaded from Arrow.com.

20.8.6 Debug Control

Name: DBGCTRL
Offset: 0x0D
Reset: 0x00
Property: PAC Write-Protection

Bit	7	6	5	4	3	2	1	0
								DBGRUN
Access								R/W
Reset								0

Bit 0 – DBGRUN Debug Run
This bit is not reset by a software reset.
This bit controls the functionality when the CPU is halted by an external debugger.

Value	Description
0	The DMAC is halted when the CPU is halted by an external debugger.
1	The DMAC continues normal operation when the CPU is halted by an external debugger.

Downloaded from Arrow.com.

20.8.7 Quality of Service Control

Name: QOSCTRL
Offset: 0x0E
Reset: 0x15
Property: PAC Write-Protection

Bit	7	6	5	4	3	2	1	0
			DQOS[1:0]		FQOS[1:0]		WRBQOS[1:0]	
Access			R/W	R/W	R/W	R/W	R/W	R/W
Reset			1	0	1	0	1	0

Bits 5:4 – DQOS[1:0] Data Transfer Quality of Service
These bits define the memory priority access during the data transfer operation.

DQOS[1:0]	Name	Description
0x0	DISABLE	Background (no sensitive operation)
0x1	LOW	Sensitive Bandwidth
0x2	MEDIUM	Sensitive Latency
0x3	HIGH	Critical Latency

Bits 3:2 – FQOS[1:0] Fetch Quality of Service
These bits define the memory priority access during the fetch operation.

FQOS[1:0]	Name	Description
0x0	DISABLE	Background (no sensitive operation)
0x1	LOW	Sensitive Bandwidth
0x2	MEDIUM	Sensitive Latency
0x3	HIGH	Critical Latency

Bits 1:0 – WRBQOS[1:0] Write-Back Quality of Service
These bits define the memory priority access during the write-back operation.

WRBQOS[1:0]	Name	Description
0x0	DISABLE	Background (no sensitive operation)
0x1	LOW	Sensitive Bandwidth
0x2	MEDIUM	Sensitive Latency
0x3	HIGH	Critical Latency

Related Links
11.4.3 SRAM Quality of Service

Downloaded from Arrow.com.

20.8.8 Software Trigger Control

Name: SWTRIGCTRL
Offset: 0x10
Reset: 0x00000000
Property: PAC Write-Protection

Bit	31	30	29	28	27	26	25	24
Access								
Reset								

Bit	23	22	21	20	19	18	17	16
Access								
Reset								

Bit	15	14	13	12	11	10	9	8
					SWTRIGn[11:8]			
Access					R/W	R/W	R/W	R/W
Reset					0	0	0	0

Bit	7	6	5	4	3	2	1	0
	SWTRIGn[7:0]							
Access	R/W	R/W	R/W	R/W	R/W	R/W	R/W	R/W
Reset	0	0	0	0	0	0	0	0

Bits 11:0 – SWTRIGn[11:0] Channel n Software Trigger [n = 11..0]
This bit is cleared when the Channel Pending bit in the Channel Status register (CHSTATUS.PEND) for the corresponding channel is either set, or by writing a '1' to it.
This bit is set if CHSTATUS.PEND is already '1' when writing a '1' to that bit.
Writing a '0' to this bit will clear the bit.
Writing a '1' to this bit will generate a DMA software trigger on channel x, if CHSTATUS.PEND=0 for channel x.
CHSTATUS.PEND will be set and SWTRIGn will remain cleared.

Downloaded from Arrow.com.

20.8.9 Priority Control 0

Name: PRICTRL0
Offset: 0x14
Reset: 0x00000000
Property: PAC Write-Protection

Bit	31	30	29	28	27	26	25	24
	RRLVLEN3				LVLPRI3[3:0]			
Access	R/W				R/W	R/W	R/W	R/W
Reset	0				0	0	0	0

Bit	23	22	21	20	19	18	17	16
	RRLVLEN2				LVLPRI2[3:0]			
Access	R/W				R/W	R/W	R/W	R/W
Reset	0				0	0	0	0

Bit	15	14	13	12	11	10	9	8
	RRLVLEN1				LVLPRI1[3:0]			
Access	R/W				R/W	R/W	R/W	R/W
Reset	0				0	0	0	0

Bit	7	6	5	4	3	2	1	0
	RRLVLEN0				LVLPRI0[3:0]			
Access	R/W				R/W	R/W	R/W	R/W
Reset	0				0	0	0	0

Bit 31 – RRLVLEN3 Level 3 Round-Robin Arbitration Enable
This bit controls which arbitration scheme is selected for DMA channels with priority level 3. For details on arbitration schemes, refer to 20.6.2.4 Arbitration.

Value	Description
0	Static arbitration scheme for channels with level 3 priority.
1	Round-robin arbitration scheme for channels with level 3 priority.

Bits 27:24 – LVLPRI3[3:0] Level 3 Channel Priority Number
When round-robin arbitration is enabled (PRICTRL0.RRLVLEN3=1) for priority level 3, this register holds the channel number of the last DMA channel being granted access as the active channel with priority level 3.
When static arbitration is enabled (PRICTRL0.RRLVLEN3=0) for priority level 3, and the value of this bit group is non-zero, it will not affect the static priority scheme.
This bit group is not reset when round-robin arbitration gets disabled (PRICTRL0.RRLVLEN3 written to '0').

Bit 23 – RRLVLEN2 Level 2 Round-Robin Arbitration Enable
This bit controls which arbitration scheme is selected for DMA channels with priority level 2. For details on arbitration schemes, refer to 20.6.2.4 Arbitration.

Value	Description
0	Static arbitration scheme for channels with level 2 priority.
1	Round-robin arbitration scheme for channels with level 2 priority.

Bits 19:16 – LVLPRI2[3:0] Level 2 Channel Priority Number
When round-robin arbitration is enabled (PRICTRL0.RRLVLEN2=1) for priority level 2, this register holds the channel number of the last DMA channel being granted access as the active channel with priority level 2.
When static arbitration is enabled (PRICTRL0.RRLVLEN2=0) for priority level 2, and the value of this bit group is non-zero, it will not affect the static priority scheme.
This bit group is not reset when round-robin arbitration gets disabled (PRICTRL0.RRLVLEN2 written to '0').

Downloaded from Arrow.com.

Bit 15 – RRLVLEN1 Level 1 Round-Robin Scheduling Enable
For details on arbitration schemes, refer to 20.6.2.4 Arbitration.

Value	Description
0	Static arbitration scheme for channels with level 1 priority.
1	Round-robin arbitration scheme for channels with level 1 priority.

Bits 11:8 – LVLPRI1[3:0] Level 1 Channel Priority Number
When round-robin arbitration is enabled (PRICTRL0.RRLVLEN1=1) for priority level 1, this register holds the channel number of the last DMA channel being granted access as the active channel with priority level 1.
When static arbitration is enabled (PRICTRL0.RRLVLEN1=0) for priority level 1, and the value of this bit group is non-zero, it will not affect the static priority scheme.
This bit group is not reset when round-robin arbitration gets disabled (PRICTRL0.RRLVLEN1 written to '0').

Bit 7 – RRLVLEN0 Level 0 Round-Robin Scheduling Enable
For details on arbitration schemes, refer to 20.6.2.4 Arbitration.

Value	Description
0	Static arbitration scheme for channels with level 0 priority.
1	Round-robin arbitration scheme for channels with level 0 priority.

Bits 3:0 – LVLPRI0[3:0] Level 0 Channel Priority Number
When round-robin arbitration is enabled (PRICTRL0.RRLVLEN0=1) for priority level 0, this register holds the channel number of the last DMA channel being granted access as the active channel with priority level 0.
When static arbitration is enabled (PRICTRL0.RRLVLEN0=0) for priority level 0, and the value of this bit group is non-zero, it will not affect the static priority scheme.
This bit group is not reset when round-robin arbitration gets disabled (PRICTRL0.RRLVLEN0 written to '0').

Downloaded from Arrow.com.

20.8.10 Interrupt Pending

Name: INTPEND
Offset: 0x20
Reset: 0x0000
Property: -

This register allows the user to identify the lowest DMA channel with pending interrupt.

Bit	15	14	13	12	11	10	9	8
	PEND	BUSY	FERR			SUSP	TCMPL	TERR
Access	R	R	R			R/W	R/W	R/W
Reset	0	0	0			0	0	0

Bit	7	6	5	4	3	2	1	0
					ID[3:0]			
Access					R/W	R/W	R/W	R/W
Reset					0	0	0	0

Bit 15 – PEND Pending
This bit will read '1' when the channel selected by Channel ID field (ID) is pending.

Bit 14 – BUSY Busy
This bit will read '1' when the channel selected by Channel ID field (ID) is busy.

Bit 13 – FERR Fetch Error
This bit will read '1' when the channel selected by Channel ID field (ID) fetched an invalid descriptor.

Bit 10 – SUSP Channel Suspend
This bit will read '1' when the channel selected by Channel ID field (ID) has pending Suspend interrupt.
Writing a '0' to this bit has no effect.
Writing a '1' to this bit will clear the Channel ID (ID) Suspend interrupt flag.

Bit 9 – TCMPL Transfer Complete
This bit will read '1' when the channel selected by Channel ID field (ID) has pending Transfer Complete interrupt.
Writing a '0' to this bit has no effect.
Writing a '1' to this bit will clear the Channel ID (ID) Transfer Complete interrupt flag.

Bit 8 – TERR Transfer Error
This bit is read one when the channel selected by Channel ID field (ID) has pending Transfer Error interrupt.
Writing a '0' to this bit has no effect.
Writing a '1' to this bit will clear the Channel ID (ID) Transfer Error interrupt flag.

Bits 3:0 – ID[3:0] Channel ID
These bits store the lowest channel number with pending interrupts. The number is valid if Suspend (SUSP), Transfer Complete (TCMPL) or Transfer Error (TERR) bits are set. The Channel ID field is refreshed when a new channel (with channel number less than the current one) with pending interrupts is detected, or when the application clears the corresponding channel interrupt sources. When no pending channels interrupts are available, these bits will always return zero value when read.
When the bits are written, indirect access to the corresponding Channel Interrupt Flag register is enabled.

Downloaded from Arrow.com.

20.8.11 Interrupt Status

Name: INTSTATUS
Offset: 0x24
Reset: 0x00000000
Property: -

Bit	31	30	29	28	27	26	25	24
Access								
Reset								

Bit	23	22	21	20	19	18	17	16
Access								
Reset								

Bit	15	14	13	12	11	10	9	8
					CHINTn[11:8]			
Access					R	R	R	R
Reset					0	0	0	0

Bit	7	6	5	4	3	2	1	0
	CHINTn[7:0]							
Access	R	R	R	R	R	R	R	R
Reset	0	0	0	0	0	0	0	0

Bits 11:0 – CHINTn[11:0] Channel n Pending Interrupt [n=11..0]
This bit is set when Channel n has a pending interrupt/the interrupt request is received.
This bit is cleared when the corresponding Channel n interrupts are disabled or the interrupts sources are cleared.

Downloaded from Arrow.com.

20.8.12 Busy Channels

Name: BUSYCH
Offset: 0x28
Reset: 0x00000000
Property: -

Bit	31	30	29	28	27	26	25	24
Access								
Reset								

Bit	23	22	21	20	19	18	17	16
Access								
Reset								

Bit	15	14	13	12	11	10	9	8
					BUSYCHn[11:8]			
Access					R	R	R	R
Reset					0	0	0	0

Bit	7	6	5	4	3	2	1	0
	BUSYCHn[7:0]							
Access	R	R	R	R	R	R	R	R
Reset	0	0	0	0	0	0	0	0

Bits 11:0 – BUSYCHn[11:0] Busy Channel n [x=11..0]
This bit is cleared when the channel trigger action for DMA channel n is complete, when a bus error for DMA channel n is detected, or when DMA channel n is disabled.
This bit is set when DMA channel n starts a DMA transfer.

Downloaded from Arrow.com.

20.8.13 Pending Channels

Name: PENDCH
Offset: 0x2C
Reset: 0x00000000
Property: -

Bit	31	30	29	28	27	26	25	24
Access								
Reset								

Bit	23	22	21	20	19	18	17	16
Access								
Reset								

Bit	15	14	13	12	11	10	9	8
					PENDCH11	PENDCH10	PENDCH9	PENDCH8
Access					R	R	R	R
Reset					0	0	0	0

Bit	7	6	5	4	3	2	1	0
	PENDCH7	PENDCH6	PENDCH5	PENDCH4	PENDCH3	PENDCH2	PENDCH1	PENDCH0
Access	R	R	R	R	R	R	R	R
Reset	0	0	0	0	0	0	0	0

Bits 0, 1, 2, 3, 4, 5, 6, 7, 8, 9, 10, 11 – PENDCH Pending Channel n [n=11..0]
This bit is cleared when trigger execution defined by channel trigger action settings for DMA channel n is started, when a bus error for DMA channel n is detected or when DMA channel n is disabled. For details on trigger action settings, refer to CHCTRLB.TRIGACT.
This bit is set when a transfer is pending on DMA channel n.

Related Links
20.8.19 CHCTRLB

Downloaded from Arrow.com.

20.8.14 Active Channel and Levels

Name: ACTIVE
Offset: 0x30
Reset: 0x00000000
Property: -

Bit	31	30	29	28	27	26	25	24
	BTCNT[15:8]							
Access	R	R	R	R	R	R	R	R
Reset	0	0	0	0	0	0	0	0

Bit	23	22	21	20	19	18	17	16
	BTCNT[7:0]							
Access	R	R	R	R	R	R	R	R
Reset	0	0	0	0	0	0	0	0

Bit	15	14	13	12	11	10	9	8
	ABUSY			ID[4:0]				
Access	R			R	R	R	R	R
Reset	0			0	0	0	0	0

Bit	7	6	5	4	3	2	1	0
					LVLEXx	LVLEXx	LVLEXx	LVLEXx
Access					R	R	R	R
Reset					0	0	0	0

Bits 31:16 – BTCNT[15:0] Active Channel Block Transfer Count
These bits hold the 16-bit block transfer count of the ongoing transfer. This value is stored in the active channel and written back in the corresponding Write-Back channel memory location when the arbiter grants a new channel access. The value is valid only when the active channel active busy flag (ABUSY) is set.

Bit 15 – ABUSY Active Channel Busy
This bit is cleared when the active transfer count is written back in the write-back memory section.
This bit is set when the next descriptor transfer count is read from the write-back memory section.

Bits 12:8 – ID[4:0] Active Channel ID
These bits hold the channel index currently stored in the active channel registers. The value is updated each time the arbiter grants a new channel transfer access request.

Bits 3,2,1,0 – LVLEXx Level x Channel Trigger Request Executing [x=3..0]
This bit is set when a level-x channel trigger request is executing or pending.
This bit is cleared when no request is pending or being executed.

Downloaded from Arrow.com.

20.8.15 Descriptor Memory Section Base Address

Name: BASEADDR
Offset: 0x34
Reset: 0x00000000
Property: PAC Write-Protection, Enable-Protected

Bit	31	30	29	28	27	26	25	24
	BASEADDR[31:24]							
Access	R/W	R/W	R/W	R/W	R/W	R/W	R/W	R/W
Reset	0	0	0	0	0	0	0	0

Bit	23	22	21	20	19	18	17	16
	BASEADDR[23:16]							
Access	R/W	R/W	R/W	R/W	R/W	R/W	R/W	R/W
Reset	0	0	0	0	0	0	0	0

Bit	15	14	13	12	11	10	9	8
	BASEADDR[15:8]							
Access	R/W	R/W	R/W	R/W	R/W	R/W	R/W	R/W
Reset	0	0	0	0	0	0	0	0

Bit	7	6	5	4	3	2	1	0
	BASEADDR[7:0]							
Access	R/W	R/W	R/W	R/W	R/W	R/W	R/W	R/W
Reset	0	0	0	0	0	0	0	0

Bits 31:0 – BASEADDR[31:0] Descriptor Memory Base Address
These bits store the Descriptor memory section base address. The value must be 64-bit aligned.

Downloaded from Arrow.com.

20.8.16 Write-Back Memory Section Base Address

Name: WRBADDR
Offset: 0x38
Reset: 0x00000000
Property: PAC Write Protection, Enable-Protected

Bit	31	30	29	28	27	26	25	24
	WRBADDR[31:24]							
Access	R/W	R/W	R/W	R/W	R/W	R/W	R/W	R/W
Reset	0	0	0	0	0	0	0	0

Bit	23	22	21	20	19	18	17	16
	WRBADDR[23:16]							
Access	R/W	R/W	R/W	R/W	R/W	R/W	R/W	R/W
Reset	0	0	0	0	0	0	0	0

Bit	15	14	13	12	11	10	9	8
	WRBADDR[15:8]							
Access	R/W	R/W	R/W	R/W	R/W	R/W	R/W	R/W
Reset	0	0	0	0	0	0	0	0

Bit	7	6	5	4	3	2	1	0
	WRBADDR[7:0]							
Access	R/W	R/W	R/W	R/W	R/W	R/W	R/W	R/W
Reset	0	0	0	0	0	0	0	0

Bits 31:0 – WRBADDR[31:0] Write-Back Memory Base Address
These bits store the Write-Back memory base address. The value must be 64-bit aligned.

Downloaded from Arrow.com.

20.8.17 Channel ID

Name: CHID
Offset: 0x3F
Reset: 0x00
Property: -

Bit	7	6	5	4	3	2	1	0
					ID[3:0]			
Access					R/W	R/W	R/W	R/W
Reset					0	0	0	0

Bits 3:0 – ID[3:0] Channel ID
These bits define the channel number that will be affected by the channel registers (CH*). Before reading or writing a channel register, the channel ID bit group must be written first.

Downloaded from Arrow.com.

20.8.18 Channel Control A

Name: CHCTRLA
Offset: 0x40
Reset: 0x00
Property: PAC Write-Protection, Enable-Protected

This register affects the DMA channel that is selected in the Channel ID register (CHID.ID).

Bit	7	6	5	4	3	2	1	0
							ENABLE	SWRST
Access	R		R	R	R	R	R/W	R/W
Reset	0		0	0	0	0	0	0

Bit 1 – ENABLE Channel Enable
Writing a '0' to this bit during an ongoing transfer, the bit will not be cleared until the internal data transfer buffer is empty and the DMA transfer is aborted. The internal data transfer buffer will be empty once the ongoing burst transfer is completed.
Writing a '1' to this bit will enable the DMA channel.
This bit is not enable-protected.

Value	Description
0	DMA channel is disabled.
1	DMA channel is enabled.

Bit 0 – SWRST Channel Software Reset
Writing a '0' to this bit has no effect.
Writing a '1' to this bit resets the channel registers to their initial state. The bit can be set when the channel is disabled (ENABLE=0). Writing a '1' to this bit will be ignored as long as ENABLE=1. This bit is automatically cleared when the reset is completed.

Value	Description
0	There is no reset operation ongoing.
1	The reset operation is ongoing.

Downloaded from Arrow.com.

20.8.19 Channel Control B

Name: CHCTRLB
Offset: 0x44
Reset: 0x00000000
Property: PAC Write Protection, Enable-Protected

This register affects the DMA channel that is selected in the Channel ID register (CHID.ID).

Bit	31	30	29	28	27	26	25	24
							CMD[1:0]	
Access							R/W	R/W
Reset							0	0

Bit	23	22	21	20	19	18	17	16
	TRIGACT[1:0]							
Access	R/W	R/W						
Reset	0	0						

Bit	15	14	13	12	11	10	9	8
			TRIGSRC[5:0]					
Access			R/W	R/W	R/W	R/W	R/W	R/W
Reset			0	0	0	0	0	0

Bit	7	6	5	4	3	2	1	0
		LVL[1:0]		EVOE	EVIE	EVACT[2:0]		
Access		R/W	R/W	R/W	R/W	R/W	R/W	R/W
Reset		0	0	0	0	0	0	0

Bits 25:24 – CMD[1:0] Software Command
These bits define the software commands. Refer to 20.6.3.2 Channel Suspend and 20.6.3.3 Channel Resume and Next Suspend Skip.
These bits are not enable-protected.

CMD[1:0]	Name	Description
0x0	NOACT	No action
0x1	SUSPEND	Channel suspend operation
0x2	RESUME	Channel resume operation
0x3	-	Reserved

Bits 23:22 – TRIGACT[1:0] Trigger Action
These bits define the trigger action used for a transfer.

TRIGACT[1:0]	Name	Description
0x0	BLOCK	One trigger required for each block transfer
0x1	-	Reserved
0x2	BEAT	One trigger required for each beat transfer
0x3	TRANSACTION	One trigger required for each transaction

Bits 13:8 – TRIGSRC[5:0] Trigger Source
These bits define the peripheral trigger which is source of the transfer. For details on trigger selection and trigger modes, refer to Transfer Triggers and Actions and CHCTRLB.TRIGACT.

Value	Name	Description
0x00	DISABLE	Only software/event triggers
0x01	SERCOM0 RX	SERCOM0 RX Trigger
0x02	SERCOM0 TX	SERCOM0 TX Trigger
0x03	SERCOM1 RX	SERCOM1 RX Trigger

Downloaded from Arrow.com.

Value	Name	Description
0x04	SERCOM1 TX	SERCOM1 TX Trigger
0x05	SERCOM2 RX	SERCOM2 RX Trigger
0x06	SERCOM2 TX	SERCOM2 TX Trigger
0x07	SERCOM3 RX	SERCOM3 RX Trigger
0x08	SERCOM3 TX	SERCOM3 TX Trigger
0x09	SERCOM4 RX	SERCOM4 RX Trigger
0x0A	SERCOM4 TX	SERCOM4 TX Trigger
0x0B	SERCOM5 RX	SERCOM5 RX Trigger
0x0C	SERCOM5 TX	SERCOM5 TX Trigger
0x0D	TCC0 OVF	TCC0 Overflow Trigger
0x0E	TCC0 MC0	TCC0 Match/Compare 0 Trigger
0x0F	TCC0 MC1	TCC0 Match/Compare 1 Trigger
0x10	TCC0 MC2	TCC0 Match/Compare 2 Trigger
0x11	TCC0 MC3	TCC0 Match/Compare 3 Trigger
0x12	TCC1 OVF	TCC1 Overflow Trigger
0x13	TCC1 MC0	TCC1 Match/Compare 0 Trigger
0x14	TCC1 MC1	TCC1 Match/Compare 1 Trigger
0x15	TCC2 OVF	TCC2 Overflow Trigger
0x16	TCC2 MC0	TCC2 Match/Compare 0 Trigger
0x17	TCC2 MC1	TCC2 Match/Compare 1 Trigger
0x18	TC3 OVF	TC3 Overflow Trigger
0x19	TC3 MC0	TC3 Match/Compare 0 Trigger
0x1A	TC3 MC1	TC3 Match/Compare 1 Trigger
0x1B	TC4 OVF	TC4 Overflow Trigger
0x1C	TC4 MC0	TC4 Match/Compare 0 Trigger
0x1D	TC4 MC1	TC4 Match/Compare 1 Trigger
0x1E	TC5 OVF	TC5 Overflow Trigger
0x1F	TC5 MC0	TC5 Match/Compare 0 Trigger
0x20	TC5 MC1	TC5 Match/Compare 1 Trigger
0x21	TC6 OVF	TC6 Overflow Trigger
0x22	TC6 MC0	TC6 Match/Compare 0 Trigger
0x23	TC6 MC1	TC6 Match/Compare 1 Trigger
0x24	TC7 OVF	TC7 Overflow Trigger
0x25	TC7 MC0	TC7 Match/Compare 0 Trigger
0x26	TC7 MC1	TC7 Match/Compare 1 Trigger
0x27	ADC RESRDY	ADC Result Ready Trigger
0x28	DAC EMPTY	DAC Empty Trigger
0x29	I2S RX 0	I2S RX 0 Trigger
0x2A	I2S RX 1	I2S RX 1 Trigger
0x2B	I2S TX 0	I2S TX 0 Trigger
0x2C	I2S TX 0	I2S TX 1 Trigger
0x2D	TCC3 OVF	TCC3 Overflow Trigger
0x2E	TCC3 MC0	TCC3 Match/Compare 0 Trigger
0x2F	TCC3 MC1	TCC3 Match/Compare 1 Trigger
0x30	TCC3 MC2	TCC3 Match/Compare 2 Trigger
0x31	TCC3 MC3	TCC3 Match/Compare 3 Trigger

Bits 6:5 – LVL[1:0] Channel Arbitration Level
These bits define the arbitration level used for the DMA channel, where a high level has priority over a low level. For further details on arbitration schemes, refer to 20.6.2.4 Arbitration.
These bits are not enable-protected.

TRIGACT[1:0]	Name	Description
0x0	LVL0	Channel Priority Level 0
0x1	LVL1	Channel Priority Level 1

Downloaded from Arrow.com.

.....continued		
TRIGACT[1:0]	**Name**	**Description**
0x2	LVL2	Channel Priority Level 2
0x3	LVL3	Channel Priority Level 3

Bit 4 – EVOE Channel Event Output Enable
This bit indicates if the Channel event generation is enabled. The event will be generated for every condition defined in the descriptor Event Output Selection (BTCTRL.EVOSEL).
This bit is available only for the Least Significant DMA channels. Refer to table: *User Multiplexer Selection* and *Event Generator Selection* of the Event System for details.

Value	Description
0	Channel event generation is disabled
1	Channel event generation is enabled

Bit 3 – EVIE Channel Event Input Enable
This bit is available only for the Least Significant DMA channels. Refer to table: *User Multiplexer Selection* and *Event Generator Selection* of the Event System for details.

Value	Description
0	Channel event action will not be executed on any incoming event
1	Channel event action will be executed on any incoming event

Bits 2:0 – EVACT[2:0] Event Input Action
These bits define the event input action, as shown below. The action is executed only if the corresponding EVIE bit in CHCTRLB register of the channel is set.
These bits are available only for the Least Significant DMA channels. Refer to table: *User Multiplexer Selection* and *Event Generator Selection* of the Event System for details.

EVACT[2:0]	Name	Description
0x0	NOACT	No action
0x1	TRIG	Normal Transfer and Conditional Transfer on Strobe trigger
0x2	CTRIG	Conditional transfer trigger
0x3	CBLOCK	Conditional block transfer
0x4	SUSPEND	Channel suspend operation
0x5	RESUME	Channel resume operation
0x6	SSKIP	Skip next block suspend action
0x7	-	Reserved

Related Links
24.8.3 USER
24.8.2 CHANNEL

Downloaded from Arrow.com.

20.8.20 Channel Interrupt Enable Clear

Name: CHINTENCLR
Offset: 0x4C
Reset: 0x00
Property: PAC Write-Protection

This register allows the user to disable an interrupt without doing a read-modify-write operation. Changes in this register will also be reflected in the Channel Interrupt Enable Set (CHINTENSET) register.
This register affects the DMA channel that is selected in the Channel ID register (CHID.ID).

Bit	7	6	5	4	3	2	1	0
						SUSP	TCMPL	TERR
Access						R/W	R/W	R/W
Reset						0	0	0

Bit 2 – SUSP Channel Suspend Interrupt Enable
Writing a '0' to this bit has no effect.
Writing a '1' to this bit will clear the Channel Suspend Interrupt Enable bit, which disables the Channel Suspend interrupt.

Value	Description
0	The Channel Suspend interrupt is disabled.
1	The Channel Suspend interrupt is enabled.

Bit 1 – TCMPL Channel Transfer Complete Interrupt Enable
Writing a '0' to this bit has no effect.
Writing a '1' to this bit will clear the Channel Transfer Complete Interrupt Enable bit, which disables the Channel Transfer Complete interrupt.

Value	Description
0	The Channel Transfer Complete interrupt is disabled. When block action is set to none, the TCMPL flag will not be set when a block transfer is completed.
1	The Channel Transfer Complete interrupt is enabled.

Bit 0 – TERR Channel Transfer Error Interrupt Enable
Writing a '0' to this bit has no effect.
Writing a '1' to this bit will clear the Channel Transfer Error Interrupt Enable bit, which disables the Channel Transfer Error interrupt.

Value	Description
0	The Channel Transfer Error interrupt is disabled.
1	The Channel Transfer Error interrupt is enabled.

Downloaded from Arrow.com.

20.8.21 Channel Interrupt Enable Set

Name: CHINTENSET
Offset: 0x4D
Reset: 0x00
Property: PAC Write-Protection

This register allows the user to enable an interrupt without doing a read-modify-write operation. Changes in this register will also be reflected in the Channel Interrupt Enable Clear (CHINTENCLR) register.
This register affects the DMA channel that is selected in the Channel ID register (CHID.ID).

Bit	7	6	5	4	3	2	1	0
						SUSP	TCMPL	TERR
Access						R/W	R/W	R/W
Reset						0	0	0

Bit 2 – SUSP Channel Suspend Interrupt Enable
Writing a '0' to this bit has no effect.
Writing a '1' to this bit will set the Channel Suspend Interrupt Enable bit, which enables the Channel Suspend interrupt.

Value	Description
0	The Channel Suspend interrupt is disabled.
1	The Channel Suspend interrupt is enabled.

Bit 1 – TCMPL Channel Transfer Complete Interrupt Enable
Writing a '0' to this bit has no effect.
Writing a '1' to this bit will set the Channel Transfer Complete Interrupt Enable bit, which enables the Channel Transfer Complete interrupt.

Value	Description
0	The Channel Transfer Complete interrupt is disabled.
1	The Channel Transfer Complete interrupt is enabled.

Bit 0 – TERR Channel Transfer Error Interrupt Enable
Writing a '0' to this bit has no effect.
Writing a '1' to this bit will set the Channel Transfer Error Interrupt Enable bit, which enables the Channel Transfer Error interrupt.

Value	Description
0	The Channel Transfer Error interrupt is disabled.
1	The Channel Transfer Error interrupt is enabled.

Downloaded from Arrow.com.

20.8.22 Channel Interrupt Flag Status and Clear

Name: CHINTFLAG
Offset: 0x4E
Reset: 0x00
Property: -

This register affects the DMA channel that is selected in the Channel ID register (CHID.ID).

Bit	7	6	5	4	3	2	1	0
						SUSP	TCMPL	TERR
Access						R/W	R/W	R/W
Reset						0	0	0

Bit 2 – SUSP Channel Suspend
This flag is cleared by writing a '1' to it.
This flag is set when a block transfer with suspend block action is completed, when a software suspend command is executed, when a suspend event is received or when an invalid descriptor is fetched by the DMA.
Writing a '0' to this bit has no effect.
Writing a '1' to this bit will clear the Channel Suspend interrupt flag for the corresponding channel.
For details on available software commands, refer to CHCTRLB.CMD.
For details on available event input actions, refer to CHCTRLB.EVACT.
For details on available block actions, refer to BTCTRL.BLOCKACT.

Bit 1 – TCMPL Channel Transfer Complete
This flag is cleared by writing a '1' to it.
This flag is set when a block transfer is completed and the corresponding interrupt block action is enabled.
Writing a '0' to this bit has no effect.
Writing a '1' to this bit will clear the Transfer Complete interrupt flag for the corresponding channel.

Bit 0 – TERR Channel Transfer Error
This flag is cleared by writing a '1' to it.
This flag is set when a bus error is detected during a beat transfer or when the DMAC fetches an invalid descriptor.
Writing a '0' to this bit has no effect.
Writing a '1' to this bit will clear the Transfer Error interrupt flag for the corresponding channel.

Downloaded from Arrow.com.

20.8.23 Channel Status

Name: CHSTATUS
Offset: 0x4F
Reset: 0x00
Property: -

This register affects the DMA channel that is selected in the Channel ID register (CHID.ID).

Bit	7	6	5	4	3	2	1	0
						FERR	BUSY	PEND
Access						R	R	R
Reset						0	0	0

Bit 2 – FERR Channel Fetch Error
This bit is cleared when a software resume command is executed.
This bit is set when an invalid descriptor is fetched.

Bit 1 – BUSY Channel Busy
This bit is cleared when the channel trigger action is completed, when a bus error is detected or when the channel is disabled.
This bit is set when the DMA channel starts a DMA transfer.

Bit 0 – PEND Channel Pending
This bit is cleared when the channel trigger action is started, when a bus error is detected or when the channel is disabled. For details on trigger action settings, refer to CHCTRLB.TRIGACT.
This bit is set when a transfer is pending on the DMA channel, as soon as the transfer request is received.

Downloaded from Arrow.com.

20.9 Register Summary - SRAM

Offset	Name	Bit Pos.	7	6	5	4	3	2	1	0
0x00	BTCTRL	7:0				BLOCKACT[1:0]		EVOSEL[1:0]		VALID
		15:8	STEPSIZE[2:0]			STEPSEL	DSTINC	SRCINC	BEATSIZE[1:0]	
0x02	BTCNT	7:0	BTCNT[7:0]							
		15:8	BTCNT[15:8]							
0x04	SRCADDR	7:0	SRCADDR[7:0]							
		15:8	SRCADDR[15:8]							
		23:16	SRCADDR[23:16]							
		31:24	SRCADDR[31:24]							
0x08	DSTADDR	7:0	DSTADDR[7:0]							
		15:8	DSTADDR[15:8]							
		23:16	DSTADDR[23:16]							
		31:24	DSTADDR[31:24]							
0x0C	DESCADDR	7:0	DESCADDR[7:0]							
		15:8	DESCADDR[15:8]							
		23:16	DESCADDR[23:16]							
		31:24	DESCADDR[31:24]							

20.10 Register Description - SRAM

Registers can be 8, 16, or 32 bits wide. Atomic 8-, 16- and 32-bit accesses are supported. In addition, the 8-bit quarters and 16-bit halves of a 32-bit register, and the 8-bit halves of a 16-bit register can be accessed directly.

Some registers are optionally write-protected by the Peripheral Access Controller (PAC). Optional PAC write-protection is denoted by the "PAC Write-Protection" property in each individual register description. For details, refer to 20.5.8 Register Access Protection.

Some registers are enable-protected, meaning they can only be written when the peripheral is disabled. Enable-protection is denoted by the "Enable-Protected" property in each individual register description.

Downloaded from Arrow.com.

20.10.1 Block Transfer Control

Name: BTCTRL
Offset: 0x00
Property: -

The BTCTRL register offset is relative to (BASEADDR or WRBADDR) + Channel Number * 0x10

Bit	15	14	13	12	11	10	9	8
	STEPSIZE[2:0]			STEPSEL	DSTINC	SRCINC	BEATSIZE[1:0]	
Access								
Reset								

Bit	7	6	5	4	3	2	1	0
				BLOCKACT[1:0]		EVOSEL[1:0]		VALID
Access								
Reset								

Bits 15:13 – STEPSIZE[2:0] Address Increment Step Size
These bits select the address increment step size. The setting apply to source or destination address, depending on STEPSEL setting.

Value	Name	Description
0x0	X1	Next ADDR = ADDR + (Beat size in byte) * 1
0x1	X2	Next ADDR = ADDR + (Beat size in byte) * 2
0x2	X4	Next ADDR = ADDR + (Beat size in byte) * 4
0x3	X8	Next ADDR = ADDR + (Beat size in byte) * 8
0x4	X16	Next ADDR = ADDR + (Beat size in byte) * 16
0x5	X32	Next ADDR = ADDR + (Beat size in byte) * 32
0x6	X64	Next ADDR = ADDR + (Beat size in byte) * 64
0x7	X128	Next ADDR = ADDR + (Beat size in byte) * 128

Bit 12 – STEPSEL Step Selection
This bit selects if source or destination addresses are using the step size settings.

Value	Name	Description
0x0	DST	Step size settings apply to the destination address
0x1	SRC	Step size settings apply to the source address

Bit 11 – DSTINC Destination Address Increment Enable
Writing a '0' to this bit will disable the destination address incrementation. The address will be kept fixed during the data transfer.
Writing a '1' to this bit will enable the destination address incrementation. By default, the destination address is incremented by 1. If the STEPSEL bit is cleared, flexible step-size settings are available in the STEPSIZE register.

Value	Description
0	The Destination Address Increment is disabled.
1	The Destination Address Increment is enabled.

Bit 10 – SRCINC Source Address Increment Enable
Writing a '0' to this bit will disable the source address incrementation. The address will be kept fixed during the data transfer.
Writing a '1' to this bit will enable the source address incrementation. By default, the source address is incremented by 1. If the STEPSEL bit is set, flexible step-size settings are available in the STEPSIZE register.

Value	Description
0	The Source Address Increment is disabled.
1	The Source Address Increment is enabled.

Downloaded from Arrow.com.

Bits 9:8 – BEATSIZE[1:0] Beat Size
These bits define the size of one beat. A beat is the size of one data transfer bus access, and the setting apply to both read and write accesses.

Value	Name	Description
0x0	BYTE	8-bit bus transfer
0x1	HWORD	16-bit bus transfer
0x2	WORD	32-bit bus transfer
other		Reserved

Bits 4:3 – BLOCKACT[1:0] Block Action
These bits define what actions the DMAC should take after a block transfer has completed.

BLOCKACT[1:0]	Name	Description
0x0	NOACT	Channel will be disabled if it is the last block transfer in the transaction
0x1	INT	Channel will be disabled if it is the last block transfer in the transaction and block interrupt
0x2	SUSPEND	Channel suspend operation is completed
0x3	BOTH	Both channel suspend operation and block interrupt

Bits 2:1 – EVOSEL[1:0] Event Output Selection
These bits define the event output selection.

EVOSEL[1:0]	Name	Description
0x0	DISABLE	Event generation disabled
0x1	BLOCK	Event strobe when block transfer complete
0x2		Reserved
0x3	BEAT	Event strobe when beat transfer complete

Bit 0 – VALID Descriptor Valid
Writing a '0' to this bit in the Descriptor or Write-Back memory will suspend the DMA channel operation when fetching the corresponding descriptor.
The bit is automatically cleared in the Write-Back memory section when channel is aborted, when an error is detected during the block transfer, or when the block transfer is completed.

Value	Description
0	The descriptor is not valid.
1	The descriptor is valid.

Downloaded from Arrow.com.

20.10.2 Block Transfer Count

Name: BTCNT
Offset: 0x02
Property: -

The BTCNT register offset is relative to (BASEADDR or WRBADDR) + Channel Number * 0x10

Bit	15	14	13	12	11	10	9	8
	BTCNT[15:8]							
Access								
Reset								

Bit	7	6	5	4	3	2	1	0
	BTCNT[7:0]							
Access								
Reset								

Bits 15:0 – BTCNT[15:0] Block Transfer Count
This bit group holds the 16-bit block transfer count.
During a transfer, the internal counter value is decremented by one after each beat transfer. The internal counter is written to the corresponding write-back memory section for the DMA channel when the DMA channel loses priority, is suspended or gets disabled. The DMA channel can be disabled by a complete transfer, a transfer error or by software.

Downloaded from Arrow.com.

20.10.3 Block Transfer Source Address

Name: SRCADDR
Offset: 0x04
Property: -

The SRCADDR register offset is relative to (BASEADDR or WRBADDR) + Channel Number * 0x10

Bit	31	30	29	28	27	26	25	24
	SRCADDR[31:24]							
Access								
Reset	0	0	0	0	0	0	0	0

Bit	23	22	21	20	19	18	17	16
	SRCADDR[23:16]							
Access								
Reset	0	0	0	0	0	0	0	0

Bit	15	14	13	12	11	10	9	8
	SRCADDR[15:8]							
Access								
Reset	0	0	0	0	0	0	0	0

Bit	7	6	5	4	3	2	1	0
	SRCADDR[7:0]							
Access								
Reset	0	0	0	0	0	0	0	0

Bits 31:0 – SRCADDR[31:0] Transfer Source Address
This bit field holds the block transfer source address.
When source address incrementation is disabled (BTCTRL.SRCINC=0), SRCADDR corresponds to the last beat transfer address in the block transfer.
When source address incrementation is enabled (BTCTRL.SRCINC=1), SRCADDR is calculated as follows:
If BTCTRL.STEPSEL = 1:

$$\mathrm{SRCADDR} = \mathrm{SRCADDR}_{START} + BTCNT \cdot \left(BEATSIZE + 1\right) \cdot 2^{\mathrm{STEPSIZE}}$$

If BTCTRL.STEPSEL= 0:

$$\mathrm{SRCADDR} = \mathrm{SRCADDR}_{START} + BTCNT \cdot (BEATSIZE + 1)$$

- $\mathrm{SRCADDR}_{START}$ is the source address of the first beat transfer in the block transfer
- BTCNT is the initial number of beats remaining in the block transfer
- BEATSIZE is the configured number of bytes in a beat
- STEPSIZE is the configured number of beats for each incrementation

Downloaded from Arrow.com.

20.10.4 Block Transfer Destination Address

Name: DSTADDR
Offset: 0x08
Property: -

The DSTADDR register offset is relative to (BASEADDR or WRBADDR) + Channel Number * 0x10

Bit	31	30	29	28	27	26	25	24
	DSTADDR[31:24]							
Access								
Reset	0	0	0	0	0	0	0	0

Bit	23	22	21	20	19	18	17	16
	DSTADDR[23:16]							
Access								
Reset	0	0	0	0	0	0	0	0

Bit	15	14	13	12	11	10	9	8
	DSTADDR[15:8]							
Access								
Reset	0	0	0	0	0	0	0	0

Bit	7	6	5	4	3	2	1	0
	DSTADDR[7:0]							
Access								
Reset	0	0	0	0	0	0	0	0

Bits 31:0 – DSTADDR[31:0] Transfer Destination Address
This bit field holds the block transfer destination address.
When destination address incrementation is disabled (BTCTRL.DSTINC = 0), DSTADDR corresponds to the last beat transfer address in the block transfer.
When destination address incrementation is enabled (BTCTRL.DSTINC = 1), DSTADDR is calculated as follows:
If BTCTRL.STEPSEL = 1:

$$DSTADDR = DSTADDR_{START} + BTCNT \bullet (BEATSIZE + 1)$$

If BTCTRL.STEPSEL = 0:

$$DSTADDR = DSTADDR_{START} + BTCNT \bullet \left(BEATSIZE + 1\right) \bullet 2^{STEPSIZE}$$

- $DSTADDR_{START}$ is the destination address of the first beat transfer in the block transfer
- BTCNT is the initial number of beats remaining in the block transfer
- BEATSIZE is the configured number of bytes in a beat
- STEPSIZE is the configured number of beats for each incrementation

Downloaded from Arrow.com.

20.10.5 Next Descriptor Address

Name: DESCADDR
Offset: 0x0C
Property: -

The DESCADDR register offset is relative to (BASEADDR or WRBADDR) + Channel Number * 0x10

Bit	31	30	29	28	27	26	25	24
	DESCADDR[31:24]							
Access								
Reset								

Bit	23	22	21	20	19	18	17	16
	DESCADDR[23:16]							
Access								
Reset								

Bit	15	14	13	12	11	10	9	8
	DESCADDR[15:8]							
Access								
Reset								

Bit	7	6	5	4	3	2	1	0
	DESCADDR[7:0]							
Access								
Reset								

Bits 31:0 – DESCADDR[31:0] Next Descriptor Address
This bit group holds the SRAM address of the next descriptor. The value must be 64-bit aligned. If the value of this SRAM register is 0x00000000, the transaction will be terminated when the DMAC tries to load the next transfer descriptor.

Downloaded from Arrow.com.

21. EIC – External Interrupt Controller

21.1 Overview

The External Interrupt Controller (EIC) allows external pins to be configured as interrupt lines. Each interrupt line can be individually masked and can generate an interrupt on rising, falling, or both edges, or on high or low levels. Each external pin has a configurable filter to remove spikes. Each external pin can also be configured to be asynchronous in order to wake up the device from sleep modes where all clocks have been disabled. External pins can also generate an event.

A separate non-maskable interrupt (NMI) is also supported. It has properties similar to the other external interrupts, but is connected to the NMI request of the CPU, enabling it to interrupt any other interrupt mode.

21.2 Features

- Up to 16 external pins (EXTINTx), plus one non-maskable pin (NMI)
- Dedicated, individually maskable interrupt for each pin
- Interrupt on rising, falling, or both edges
- Interrupt on high or low levels
- Asynchronous interrupts for sleep modes without clock
- Filtering of external pins
- Event generation from EXTINTx

21.3 Block Diagram

Figure 21-1. EIC Block Diagram

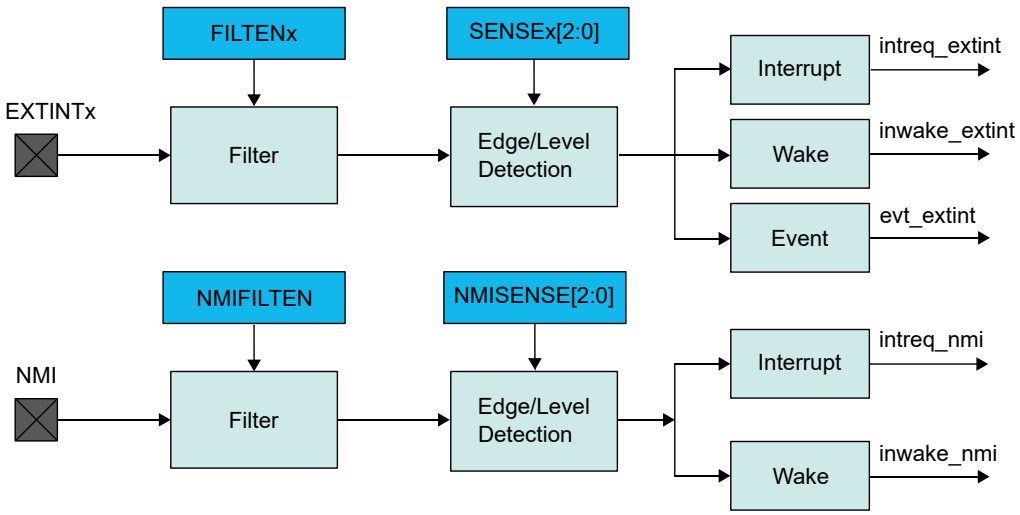

21.4 Signal Description

Signal Name	Type	Description
EXTINT[15..0]	Digital Input	External interrupt pin
NMI	Digital Input	Non-maskable interrupt pin

One signal may be available on several pins.

Downloaded from Arrow.com.

Related Links

7. I/O Multiplexing and Considerations

21.5 Product Dependencies

In order to use this EIC, other parts of the system must be configured correctly, as described below.

21.5.1 I/O Lines

Using the EIC's I/O lines requires the I/O pins to be configured.

Related Links

23. PORT - I/O Pin Controller

21.5.2 Power Management

All interrupts are available down to STANDBY sleep mode, but the EIC can be configured to automatically mask some interrupts in order to prevent device wake-up.

The EIC will continue to operate in any sleep mode where the selected source clock is running. The EIC's interrupts can be used to wake up the device from sleep modes. Events connected to the Event System can trigger other operations in the system without exiting sleep modes.

Related Links

16. PM – Power Manager

21.5.3 Clocks

The EIC bus clock (CLK_EIC_APB) can be enabled and disabled in the Power Manager, and the default state of CLK_EIC_APB can be found in the *Peripheral Clock Masking* section in PM – Power Manager.

A generic clock (GCLK_EIC) is required to clock the peripheral. This clock must be configured and enabled in the Generic Clock Controller before using the peripheral. Refer to *GCLK – Generic Clock Controller*.

This generic clock is asynchronous to the user interface clock (CLK_EIC_APB). Due to this asynchronicity, writes to certain registers will require synchronization between the clock domains. Refer to 21.6.9 Synchronization for further details.

Related Links

16.6.2.6 Peripheral Clock Masking
15. GCLK - Generic Clock Controller

21.5.4 DMA

Not applicable.

21.5.5 Interrupts

There are several interrupt request lines, at least one for the external interrupts (EXTINT) and one for non-maskable interrupt (NMI).

The EXTINT interrupt request line is connected to the interrupt controller. Using the EIC interrupt requires the interrupt controller to be configured first.

The NMI interrupt request line is also connected to the interrupt controller, but does not require the interrupt to be configured.

Related Links

11.2 Nested Vector Interrupt Controller

21.5.6 Events

The events are connected to the Event System. Using the events requires the Event System to be configured first.

Related Links

24. EVSYS – Event System

Downloaded from Arrow.com.

21.5.7 Debug Operation

When the CPU is halted in debug mode, the EIC continues normal operation. If the EIC is configured in a way that requires it to be periodically serviced by the CPU through interrupts or similar, improper operation or data loss may result during debugging.

21.5.8 Register Access Protection

All registers with write-access can be write-protected optionally by the Peripheral Access Controller (PAC), except for the following registers:

- Interrupt Flag Status and Clear register (INTFLAG)
- Non-Maskable Interrupt Flag Status and Clear register (NMIFLAG)

Optional write-protection by the Peripheral Access Controller (PAC) is denoted by the "PAC Write-Protection" property in each individual register description.

PAC write-protection does not apply to accesses through an external debugger.

Related Links

11.6 Peripheral Access Controller (PAC)

21.5.9 Analog Connections

Not applicable.

21.6 Functional Description

21.6.1 Principle of Operation

The EIC detects edge or level condition to generate interrupts to the CPU interrupt controller or events to the Event System. Each external interrupt pin (EXTINT) can be filtered using majority vote filtering, clocked by GCLK_EIC

21.6.2 Basic Operation

21.6.2.1 Initialization

The EIC must be initialized in the following order:

1. Enable CLK_EIC_APB
2. If edge detection or filtering is required, GCLK_EIC must be enabled
3. Write the EIC configuration registers (EVCTRL, WAKEUP, CONFIGy)
4. Enable the EIC

To use NMI, GCLK_EIC must be enabled after EIC configuration (NMICTRL).

21.6.2.2 Enabling, Disabling and Resetting

The EIC is enabled by writing a '1' the Enable bit in the Control register (CTRL.ENABLE). The EIC is disabled by writing CTRL.ENABLE to '0'.

The EIC is reset by setting the Software Reset bit in the Control register (CTRL.SWRST). All registers in the EIC will be reset to their initial state, and the EIC will be disabled.

Refer to the CTRL register description for details.

21.6.3 External Pin Processing

Each external pin can be configured to generate an interrupt/event on edge detection (rising, falling or both edges) or level detection (high or low). The sense of external interrupt pins is configured by writing the Input Sense x bits in the Config n register (CONFIGn.SENSEx). The corresponding interrupt flag (INTFLAG.EXTINT[x]) in the Interrupt Flag Status and Clear register (INTFLAG) is set when the interrupt condition is met.

When the interrupt flag has been cleared in edge-sensitive mode, INTFLAG.EXTINT[x] will only be set if a new interrupt condition is met. In level-sensitive mode, when interrupt has been cleared, INTFLAG.EXTINT[x] will be set immediately if the EXTINTx pin still matches the interrupt condition.

Downloaded from Arrow.com.

Each external pin can be filtered by a majority vote filtering, clocked by GCLK_EIC. Filtering is enabled if bit Filter Enable x in the Configuration n register (CONFIGn.FILTENx) is written to '1'. The majority vote filter samples the external pin three times with GCLK_EIC and outputs the value when two or more samples are equal.

Table 21-1. Majority Vote Filter

Samples [0, 1, 2]	Filter Output
[0,0,0]	0
[0,0,1]	0
[0,1,0]	0
[0,1,1]	1
[1,0,0]	0
[1,0,1]	1
[1,1,0]	1
[1,1,1]	1

When an external interrupt is configured for level detection, or if filtering is disabled, detection is made asynchronously, and GCLK_EIC is not required.

If filtering or edge detection is enabled, the EIC automatically requests the GCLK_EIC to operate (GCLK_EIC must be enabled in the GCLK module, see *GCLK – Generic Clock Controller* for details). If level detection is enabled, GCLK_EIC is not required, but interrupt and events can still be generated.

When an external interrupt is configured for level detection and when filtering is disabled, detection is done asynchronously. Asynchronuous detection does not require GCLK_EIC, but interrupt and events can still be generated. If filtering or edge detection is enabled, the EIC automatically requests GCLK_EIC to operate. GCLK_EIC must be enabled in the GCLK module.

Figure 21-2. Interrupt Detections

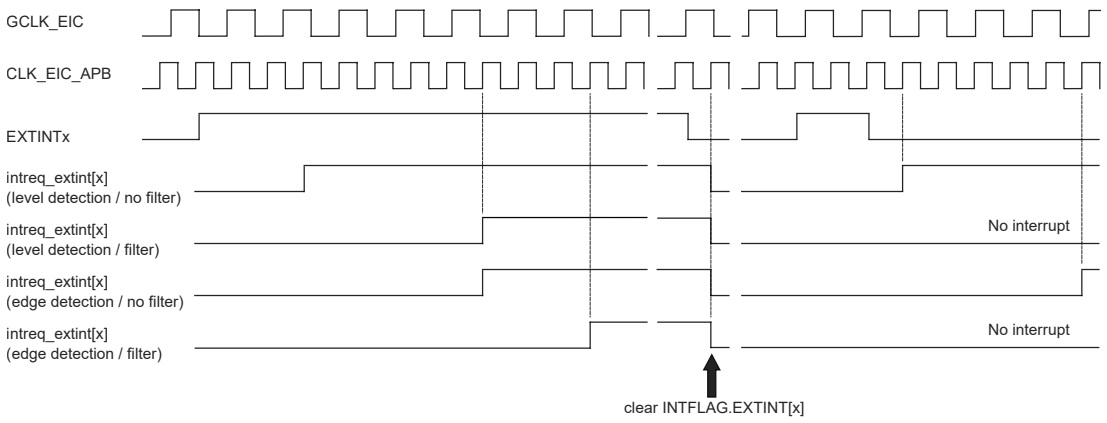

The detection delay depends on the detection mode.

Table 21-2. Interrupt Latency

Detection mode	Latency (worst case)
Level without filter	Three CLK_EIC_APB periods
Level with filter	Four GCLK_EIC periods + Three CLK_EIC_APB periods
Edge without filter	Four GCLK_EIC periods + Three CLK_EIC_APB periods
Edge with filter	Six GCLK_EIC periods + Three CLK_EIC_APB periods

Downloaded from Arrow.com.

Related Links

15. GCLK - Generic Clock Controller

21.6.4 Additional Features

21.6.4.1 Non-Maskable Interrupt (NMI)

The non-maskable interrupt pin can also generate an interrupt on edge or level detection, but it is configured with the dedicated NMI Control register (NMICTRL). To select the sense for NMI, write to the NMISENSE bit group in the NMI Control register (NMICTRL.NMISENSE). NMI filtering is enabled by writing a '1' to the NMI Filter Enable bit (NMICTRL.NMIFILTEN).

If edge detection or filtering is required, enable GCLK_EIC or CLK_ULP32K.

NMI detection is enabled only by the NMICTRL.NMISENSE value, and the EIC is not required to be enabled.

When an NMI is detected, the non-maskable interrupt flag in the NMI Flag Status and Clear register is set (NMIFLAG.NMI). NMI interrupt generation is always enabled, and NMIFLAG.NMI generates an interrupt request when set.

21.6.5 DMA Operation

Not applicable.

21.6.6 Interrupts

The EIC has the following interrupt sources:

- External interrupt pins (EXTINTx). See 21.6.2 Basic Operation.
- Non-maskable interrupt pin (NMI). See 21.6.4 Additional Features.

Each interrupt source has an associated interrupt flag. The interrupt flag in the Interrupt Flag Status and Clear register (INTFLAG) is set when an interrupt condition occurs (NMIFLAG for NMI). Each interrupt, except NMI, can be individually enabled by setting the corresponding bit in the Interrupt Enable Set register (INTENSET=1), and disabled by setting the corresponding bit in the Interrupt Enable Clear register (INTENCLR=1).

An interrupt request is generated when the interrupt flag is set and the corresponding interrupt is enabled. The interrupt request remains active until the interrupt flag is cleared, the interrupt is disabled, or the EIC is reset. See the INTFLAG register for details on how to clear interrupt flags. The EIC has one interrupt request line for each external interrupt (EXTINTx) and one line for NMI. The user must read the INTFLAG (or NMIFLAG) register to determine which interrupt condition is present.

Notes:

1. Interrupts must be globally enabled for interrupt requests to be generated.
2. If an external interrupts (EXTINT) is common on two or more I/O pins, only one will be active (the first one programmed).

Related Links

7.1 Multiplexed Signals
11. Processor And Architecture

21.6.7 Events

The EIC can generate the following output events:

- External event from pin (EXTINTx).

Setting an Event Output Control register (EVCTRL.EXTINTEO) enables the corresponding output event. Clearing this bit disables the corresponding output event. Refer to *Event System* for details on configuring the Event System.

When the condition on pin EXTINTx matches the configuration in the CONFIGn register, the corresponding event is generated, if enabled.

Related Links

24. EVSYS – Event System

Downloaded from Arrow.com.

21.6.8 Sleep Mode Operation

In sleep modes, an EXTINTx pin can wake up the device if the corresponding condition matches the configuration in CONFIGy register. Writing a one to a Wake-Up Enable bit (WAKEUP.WAKEUPEN[x]) enables the wake-up from pin EXTINTx. Writing a zero to a Wake-Up Enable bit (WAKEUP.WAKEUPEN[x]) disables the wake-up from pin EXTINTx.

Using WAKEUPEN[x]=1 with INTENSET=0 is not recommended.

In sleep modes, an EXTINTx pin can wake up the device if the corresponding condition matches the configuration in CONFIGn register, and the corresponding bit in the Interrupt Enable Set register (INTENSET) is written to '1'. WAKEUP.WAKEUPEN[x]=1 can enable the wake-up from pin EXTINTx.

Figure 21-3. Wake-Up Operation Example (High-Level Detection, No Filter, WAKEUPEN[x]=1)

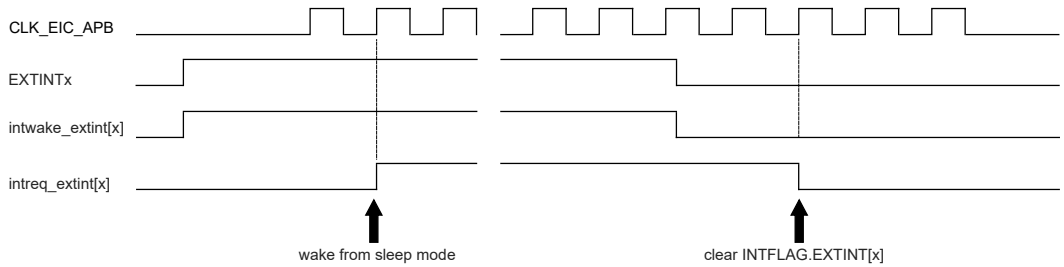

21.6.9 Synchronization

Due to asynchronicity between the main clock domain and the peripheral clock domains, some registers need to be synchronized when written or read.

When executing an operation that requires synchronization, the Synchronization Busy bit in the Status register (STATUS.SYNCBUSY) will be set immediately, and cleared when synchronization is complete.

If an operation that requires synchronization is executed while STATUS.SYNCBUSY is one, the bus will be stalled. All operations will complete successfully, but the CPU will be stalled, and interrupts will be pending as long as the bus is stalled.

The following bits are synchronized when written:

- Software Reset bit in the Control register (CTRL.SWRST)
- Enable bit in the Control register (CTRL.ENABLE)

Related Links

14.3 Register Synchronization

Downloaded from Arrow.com.

21.7 Register Summary

Offset	Name	Bit Pos.	7	6	5	4	3	2	1	0
0x00	CTRL	7:0							ENABLE	SWRST
0x01	STATUS	7:0	SYNCBUSY							
0x02	NMICTRL	7:0					NMIFILTEN	NMISENSE[2:0]		
0x03	NMIFLAG	7:0								NMI
0x04	EVCTRL	7:0	EXTINTEO7	EXTINTEO6	EXTINTEO5	EXTINTEO4	EXTINTEO3	EXTINTEO2	EXTINTEO1	EXTINTEO0
		15:8	EXTINTEO15	EXTINTEO14	EXTINTEO13	EXTINTEO12	EXTINTEO11	EXTINTEO10	EXTINTEO9	EXTINTEO8
		23:16								
		31:24								
0x08	INTENCLR	7:0	EXTINT7	EXTINT6	EXTINT5	EXTINT4	EXTINT3	EXTINT2	EXTINT1	EXTINT0
		15:8	EXTINT15	EXTINT14	EXTINT13	EXTINT12	EXTINT11	EXTINT10	EXTINT9	EXTINT8
		23:16								
		31:24								
0x0C	INTENSET	7:0	EXTINT7	EXTINT6	EXTINT5	EXTINT4	EXTINT3	EXTINT2	EXTINT1	EXTINT0
		15:8	EXTINT15	EXTINT14	EXTINT13	EXTINT12	EXTINT11	EXTINT10	EXTINT9	EXTINT8
		23:16								
		31:24								
0x10	INTFLAG	7:0	EXTINT7	EXTINT6	EXTINT5	EXTINT4	EXTINT3	EXTINT2	EXTINT1	EXTINT0
		15:8	EXTINT15	EXTINT14	EXTINT13	EXTINT12	EXTINT11	EXTINT10	EXTINT9	EXTINT8
		23:16								
		31:24								
0x14	WAKEUP	7:0	WAKEUPEN7	WAKEUPEN6	WAKEUPEN5	WAKEUPEN4	WAKEUPEN3	WAKEUPEN2	WAKEUPEN1	WAKEUPEN0
		15:8	WAKEUPEN15	WAKEUPEN14	WAKEUPEN13	WAKEUPEN12	WAKEUPEN11	WAKEUPEN10	WAKEUPEN9	WAKEUPEN8
		23:16								
		31:24								
0x18	CONFIG0	7:0	FILTEN1	SENSE1[2:0]			FILTEN0	SENSE0[2:0]		
		15:8	FILTEN3	SENSE3[2:0]			FILTEN2	SENSE2[2:0]		
		23:16	FILTEN5	SENSE5[2:0]			FILTEN4	SENSE4[2:0]		
		31:24	FILTEN7	SENSE7[2:0]			FILTEN6	SENSE6[2:0]		
0x1C	CONFIG1	7:0	FILTEN1	SENSE1[2:0]			FILTEN0	SENSE0[2:0]		
		15:8	FILTEN3	SENSE3[2:0]			FILTEN2	SENSE2[2:0]		
		23:16	FILTEN5	SENSE5[2:0]			FILTEN4	SENSE4[2:0]		
		31:24	FILTEN7	SENSE7[2:0]			FILTEN6	SENSE6[2:0]		

21.8 Register Description

Registers can be 8, 16, or 32 bits wide. Atomic 8-, 16-, and 32-bit accesses are supported. In addition, the 8-bit quarters and 16-bit halves of a 32-bit register, and the 8-bit halves of a 16-bit register can be accessed directly.

Some registers require synchronization when read and/or written. Synchronization is denoted by the "Read-Synchronized" and/or "Write-Synchronized" property in each individual register description.

Some registers are enable-protected, meaning they can only be written when the module is disabled. Enable-protection is denoted by the "Enable-Protected" property in each individual register description.

Downloaded from Arrow.com.

21.8.1 Control

Name: CTRL
Offset: 0x00
Reset: 0x00
Property: Write-Protected, Write-Synchronized

Bit	7	6	5	4	3	2	1	0
							ENABLE	SWRST
Access							R/W	R/W
Reset							0	0

Bit 1 – ENABLE Enable
Due to synchronization, there is delay from writing CTRL.ENABLE until the peripheral is enabled/disabled. The value written to CTRL.ENABLE will read back immediately, and the Synchronization Busy bit in the Status register (STATUS.SYNCBUSY) will be set. STATUS.SYNCBUSY will be cleared when the operation is complete.

Value	Description
0	The EIC is disabled.
1	The EIC is enabled.

Bit 0 – SWRST Software Reset
Writing a zero to this bit has no effect.
Writing a one to this bit resets all registers in the EIC to their initial state, and the EIC will be disabled.
Writing a one to CTRL.SWRST will always take precedence, meaning that all other writes in the same write operation will be discarded.
Due to synchronization, there is a delay from writing CTRL.SWRST until the reset is complete. CTRL.SWRST and STATUS.SYNCBUSY will both be cleared when the reset is complete.

Value	Description
0	There is no ongoing reset operation.
1	The reset operation is ongoing.

Downloaded from Arrow.com.

21.8.2 Status

Name: STATUS
Offset: 0x01
Reset: 0x00
Property: -

Bit	7	6	5	4	3	2	1	0
	SYNCBUSY							
Access	R							
Reset	0							

Bit 7 – SYNCBUSY Synchronization Busy
This bit is cleared when the synchronization of registers between the clock domains is complete.
This bit is set when the synchronization of registers between clock domains is started.

Downloaded from Arrow.com.

21.8.3 Non-Maskable Interrupt Control

Name: NMICTRL
Offset: 0x02
Reset: 0x00
Property: Write-Protected

Bit	7	6	5	4	3	2	1	0
					NMIFILTEN	NMISENSE[2:0]		
Access					R/W	R/W	R/W	R/W
Reset					0	0	0	0

Bit 3 – NMIFILTEN Non-Maskable Interrupt Filter Enable

Value	Description
0	NMI filter is disabled.
1	NMI filter is enabled.

Bits 2:0 – NMISENSE[2:0] Non-Maskable Interrupt Sense
These bits define on which edge or level the NMI triggers.

NMISENSE[2:0]	Name	Description
0x0	NONE	No detection
0x1	RISE	Rising-edge detection
0x2	FALL	Falling-edge detection
0x3	BOTH	Both-edges detection
0x4	HIGH	High-level detection
0x5	LOW	Low-level detection
0x6-0x7		Reserved

Downloaded from Arrow.com.

21.8.4 Non-Maskable Interrupt Flag Status and Clear

Name: NMIFLAG
Offset: 0x03
Reset: 0x00
Property: -

Bit	7	6	5	4	3	2	1	0
								NMI
Access								R/W
Reset								0

Bit 0 – NMI Non-Maskable Interrupt
This flag is cleared by writing a one to it.
This flag is set when the NMI pin matches the NMI sense configuration, and will generate an interrupt request.
Writing a zero to this bit has no effect.
Writing a one to this bit clears the non-maskable interrupt flag.

Downloaded from Arrow.com.

21.8.5 Event Control

Name: EVCTRL
Offset: 0x04
Reset: 0x00000000
Property: Write-Protected

Bit	31	30	29	28	27	26	25	24
Access								
Reset								

Bit	23	22	21	20	19	18	17	16
Access								
Reset								

Bit	15	14	13	12	11	10	9	8
	EXTINTEO15	EXTINTEO14	EXTINTEO13	EXTINTEO12	EXTINTEO11	EXTINTEO10	EXTINTEO9	EXTINTEO8
Access	R/W	R/W	R/W	R/W	R/W	R/W	R/W	R/W
Reset	0	0	0	0	0	0	0	0

Bit	7	6	5	4	3	2	1	0
	EXTINTEO7	EXTINTEO6	EXTINTEO5	EXTINTEO4	EXTINTEO3	EXTINTEO2	EXTINTEO1	EXTINTEO0
Access	R/W	R/W	R/W	R/W	R/W	R/W	R/W	R/W
Reset	0	0	0	0	0	0	0	0

Bits 0, 1, 2, 3, 4, 5, 6, 7, 8, 9, 10, 11, 12, 13, 14, 15 – EXTINTEOx External Interrupt x Event Output Enable [x=15..0]
These bits indicate whether the event associated with the EXTINTx pin is enabled or not to generated for every detection.

Value	Description
0	Event from pin EXTINTx is disabled.
1	Event from pin EXTINTx is enabled.

Downloaded from Arrow.com.

21.8.6 Interrupt Enable Clear

Name: INTENCLR
Offset: 0x08
Reset: 0x00000000
Property: Write-Protected

Bit	31	30	29	28	27	26	25	24
Access								
Reset								

Bit	23	22	21	20	19	18	17	16
Access								
Reset								

Bit	15	14	13	12	11	10	9	8
	EXTINT15	EXTINT14	EXTINT13	EXTINT12	EXTINT11	EXTINT10	EXTINT9	EXTINT8
Access	R/W	R/W	R/W	R/W	R/W	R/W	R/W	R/W
Reset	0	0	0	0	0	0	0	0

Bit	7	6	5	4	3	2	1	0
	EXTINT7	EXTINT6	EXTINT5	EXTINT4	EXTINT3	EXTINT2	EXTINT1	EXTINT0
Access	R/W	R/W	R/W	R/W	R/W	R/W	R/W	R/W
Reset	0	0	0	0	0	0	0	0

Bits 0, 1, 2, 3, 4, 5, 6, 7, 8, 9, 10, 11, 12, 13, 14, 15 – EXTINTx External Interrupt x Enable [x=15..0]
Writing a zero to this bit has no effect.
Writing a one to this bit will clear the External Interrupt x Enable bit, which disables the external interrupt.

Value	Description
0	The external interrupt x is disabled.
1	The external interrupt x is enabled.

Downloaded from Arrow.com.

21.8.7 Interrupt Enable Set

Name: INTENSET
Offset: 0x0C
Reset: 0x00000000
Property: Write-Protected

Bit	31	30	29	28	27	26	25	24
Access								
Reset								

Bit	23	22	21	20	19	18	17	16
Access								
Reset								

Bit	15	14	13	12	11	10	9	8
	EXTINT15	EXTINT14	EXTINT13	EXTINT12	EXTINT11	EXTINT10	EXTINT9	EXTINT8
Access	R/W	R/W	R/W	R/W	R/W	R/W	R/W	R/W
Reset	0	0	0	0	0	0	0	0

Bit	7	6	5	4	3	2	1	0
	EXTINT7	EXTINT6	EXTINT5	EXTINT4	EXTINT3	EXTINT2	EXTINT1	EXTINT0
Access	R/W	R/W	R/W	R/W	R/W	R/W	R/W	R/W
Reset	0	0	0	0	0	0	0	0

Bits 0, 1, 2, 3, 4, 5, 6, 7, 8, 9, 10, 11, 12, 13, 14, 15 – EXTINTx External Interrupt x Enable [x=15..0]
Writing a zero to this bit has no effect.
Writing a one to this bit will set the External Interrupt x Enable bit, which enables the external interrupt.

Value	Description
0	The external interrupt x is disabled.
1	The external interrupt x is enabled.

Downloaded from Arrow.com.

21.8.8 Interrupt Flag Status and Clear

Name: INTFLAG
Offset: 0x10
Reset: 0x00000000
Property: -

Bit	31	30	29	28	27	26	25	24
Access								
Reset								

Bit	23	22	21	20	19	18	17	16
Access								
Reset								

Bit	15	14	13	12	11	10	9	8
	EXTINT15	EXTINT14	EXTINT13	EXTINT12	EXTINT11	EXTINT10	EXTINT9	EXTINT8
Access	R/W	R/W	R/W	R/W	R/W	R/W	R/W	R/W
Reset	0	0	0	0	0	0	0	0

Bit	7	6	5	4	3	2	1	0
	EXTINT7	EXTINT6	EXTINT5	EXTINT4	EXTINT3	EXTINT2	EXTINT1	EXTINT0
Access	R/W	R/W	R/W	R/W	R/W	R/W	R/W	R/W
Reset	0	0	0	0	0	0	0	0

Bits 0, 1, 2, 3, 4, 5, 6, 7, 8, 9, 10, 11, 12, 13, 14, 15 – EXTINTx External Interrupt x [x=15..0]
This flag is cleared by writing a one to it.
This flag is set when EXTINTx pin matches the external interrupt sense configuration and will generate an interrupt request if INTENCLR/SET.EXTINT[x] is one.
Writing a zero to this bit has no effect.
Writing a one to this bit clears the External Interrupt x flag.

Downloaded from Arrow.com.

21.8.9 Wake-Up Enable

Name: WAKEUP
Offset: 0x14
Reset: 0x00000000
Property: Write-Protected

Bit	31	30	29	28	27	26	25	24
Access								
Reset								

Bit	23	22	21	20	19	18	17	16
Access								
Reset								

Bit	15	14	13	12	11	10	9	8
	WAKEUPEN15	WAKEUPEN14	WAKEUPEN13	WAKEUPEN12	WAKEUPEN11	WAKEUPEN10	WAKEUPEN9	WAKEUPEN8
Access	R/W	R/W	R/W	R/W	R/W	R/W	R/W	R/W
Reset	0	0	0	0	0	0	0	0

Bit	7	6	5	4	3	2	1	0
	WAKEUPEN7	WAKEUPEN6	WAKEUPEN5	WAKEUPEN4	WAKEUPEN3	WAKEUPEN2	WAKEUPEN1	WAKEUPEN0
Access	R/W	R/W	R/W	R/W	R/W	R/W	R/W	R/W
Reset	0	0	0	0	0	0	0	0

Bits 0, 1, 2, 3, 4, 5, 6, 7, 8, 9, 10, 11, 12, 13, 14, 15 – WAKEUPENx External Interrupt x Wake-up Enable [x=15..0]
This bit enables or disables wake-up from Sleep modes when the EXTINTx pin matches the external interrupt sense configuration.

Value	Description
0	Wake-up from the EXTINTx pin is disabled.
1	Wake-up from the EXTINTx pin is enabled.

Downloaded from Arrow.com.

21.8.10 Configuration n

Name: CONFIGn
Offset: 0x18 + n*0x04 [n=0..1]
Reset: 0x00000000
Property: Write-Protected

Bit	31	30	29	28	27	26	25	24
	FILTEN7	SENSE7[2:0]			FILTEN6	SENSE6[2:0]		
Access	RW	RW	RW	RW	RW	RW	RW	RW
Reset	0	0	0	0	0	0	0	0

Bit	23	22	21	20	19	18	17	16
	FILTEN5	SENSE5[2:0]			FILTEN4	SENSE4[2:0]		
Access	RW	RW	RW	RW	RW	RW	RW	RW
Reset	0	0	0	0	0	0	0	0

Bit	15	14	13	12	11	10	9	8
	FILTEN3	SENSE3[2:0]			FILTEN2	SENSE2[2:0]		
Access	RW	RW	RW	RW	RW	RW	RW	RW
Reset	0	0	0	0	0	0	0	0

Bit	7	6	5	4	3	2	1	0
	FILTEN1	SENSE1[2:0]			FILTEN0	SENSE0[2:0]		
Access	RW	RW	RW	RW	RW	RW	RW	RW
Reset	0	0	0	0	0	0	0	0

Bits 3, 7, 11, 15, 19, 23, 27, 31 – FILTENx Filter x Enable [x=7..0]

0:	Filter is disabled for EXTINT[n*8+x] input.
1:	Filter is enabled for EXTINT[n*8+x] input.

Bits 0:2, 4:6, 8:10, 12:14, 16:18, 20:22, 24:26, 28:30 – SENSEx Input Sense x Configuration [x=7..0]

SENSEx[2:0]	Name	Description
0x0	NONE	No detection
0x1	RISE	Rising-edge detection
0x2	FALL	Falling-edge detection
0x3	BOTH	Both-edges detection
0x4	HIGH	High-level detection
0x5	LOW	Low-level detection
0x6-0x7		Reserved

Notes:

1. FILTEN7-FILTEN0 bits and SENSE7[2:0]-SENSE0[2:0] bitfields in CONFIG0 register belong to External Interrupt 7 to 0.
2. FILTEN7-FILTEN0 bits and SENSE7[2:0]-SENSE0[2:0] bitfields in CONFIG1 register belong to External Interrupt 15 to 8.

Downloaded from Arrow.com.

22. Nonvolatile Memory Controller (NVMCTRL)

22.1 Overview

Non-volatile Memory (NVM) is a reprogrammable Flash memory that retains program and data storage even with power off. It embeds a main array and a separate smaller Read While Write EEPROM Emulation array (RWWEE Emulation) that can be programmed while reading the main array (RWWEE stands for Read (the main array) while Write (the EEPROM Emulation)). The NVM Controller (NVMCTRL) connects to the AHB and APB bus interfaces for system access to the NVM block. The AHB interface is used for reads and writes to the NVM block, while the APB interface is used for commands and configuration.

22.2 Features

- 32-bit AHB interface for reads and writes
- Read-While-Write DATA Flash
- All NVM sections are memory mapped to the AHB, including calibration and system configuration
- 32-bit APB interface for commands and control
- Programmable wait states for read optimization
- 16 regions can be individually protected or unprotected
- Additional protection for bootloader
- Supports device protection through a security bit
- Interface to Power Manager for power-down of Flash blocks in sleep modes
- Can optionally wake up on exit from sleep or on first access
- Direct-mapped cache

Note: A register with property "Enable-Protected" may contain bits that are *not* enable-protected.

22.3 Block Diagram

Figure 22-1. Block Diagram

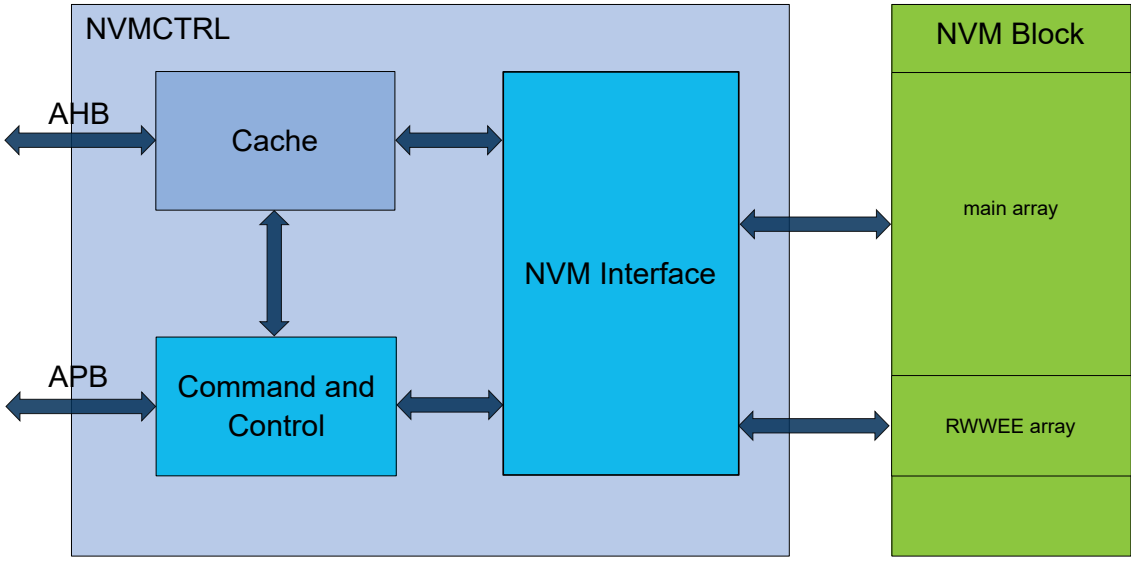

Downloaded from Arrow.com.

22.4 Signal Description

Not applicable.

22.5 Product Dependencies

In order to use this peripheral, other parts of the system must be configured correctly, as described in the following sections.

22.5.1 Power Management

The NVMCTRL will continue to operate in any sleep mode where the selected source clock is running. The NVMCTRL interrupts can be used to wake up the device from sleep modes.

The Power Manager will automatically put the NVM block into a low-power state when entering sleep mode. This is based on the Control B register (CTRLB) SLEEPPRM bit setting. Refer to the 22.8.2 CTRLB. SLEEPPRM register description for more details. The NVM block goes into low-power mode automatically when the device enters STANDBY mode regardless of SLEEPPRM. The NVM Page Buffer is lost when the NVM goes into low power mode therefore a write command must be issued prior entering the NVM low power mode. NVMCTRL SLEEPPRM can be disabled to avoid such loss when the CPU goes into sleep except if the device goes into STANDBY mode for which there is no way to retain the Page Buffer.

Related Links

16. PM – Power Manager

22.5.2 Clocks

Two synchronous clocks are used by the NVMCTRL. One is provided by the AHB bus (CLK_NVMCTRL_AHB) and the other is provided by the APB bus (CLK_NVMCTRL_APB). For higher system frequencies, a programmable number of wait states can be used to optimize performance. When changing the AHB bus frequency, the user must ensure that the NVM Controller is configured with the proper number of wait states. Refer to the Electrical Characteristics for the exact number of wait states to be used for a particular frequency range.

Related Links

37. Electrical Characteristics at 85°C

22.5.3 Interrupts

The NVM Controller interrupt request line is connected to the interrupt controller. Using the NVMCTRL interrupt requires the interrupt controller to be programmed first.

22.5.4 Debug Operation

When an external debugger forces the CPU into debug mode, the peripheral continues normal operation.

Access to the NVM block can be protected by the security bit. In this case, the NVM block will not be accessible. See the section on the NVMCTRL 22.6.6 Security Bit for details.

22.5.5 Register Access Protection

All registers with write-access are optionally write-protected by the Peripheral Access Controller (PAC), except the following registers:

- Interrupt Flag Status and Clear register (INTFLAG)
- Status register (STATUS)

Optional write-protection by the Peripheral Access Controller (PAC) is denoted by the "PAC Write-Protection" property in each individual register description.

Related Links

11.6 Peripheral Access Controller (PAC)

Downloaded from Arrow.com.

22.5.6 Analog Connections

Not applicable.

22.6 Functional Description

22.6.1 Principle of Operation

The NVM Controller is a client on the AHB and APB buses. It responds to commands, read requests and write requests, based on user configuration.

22.6.1.1 Initialization

After power up, the NVM Controller goes through a power-up sequence. During this time, access to the NVM Controller from the AHB bus is halted. Upon power-up completion, the NVM Controller is operational without any need for user configuration.

22.6.2 Memory Organization

Refer to the Physical Memory Map for memory sizes and addresses for each device.

The NVM is organized into rows, where each row contains four pages, as shown in the NVM Row Organization figure. The NVM has a row-erase granularity, while the write granularity is by page. In other words, a single row erase will erase all four pages in the row, while four write operations are used to write the complete row.

Figure 22-2. NVM Row Organization

Row n	Page (n*4) + 3	Page (n*4) + 2	Page (n*4) + 1	Page (n*4) + 0

The NVM block contains a calibration and auxiliary space plus a dedicated RWWEE Emulation address space that are memory mapped. Refer to the NVM Organization figure below for details.

The calibration and auxiliary space contains factory calibration and system configuration information. These spaces can be read from the AHB bus in the same way as the main NVM main address space.

In addition, a boot loader section can be allocated at the beginning of the main array, and an EEPROM Emulation section can be allocated at the end of the NVM main address space.

Downloaded from Arrow.com.

Figure 22-3. NVM Memory Organization

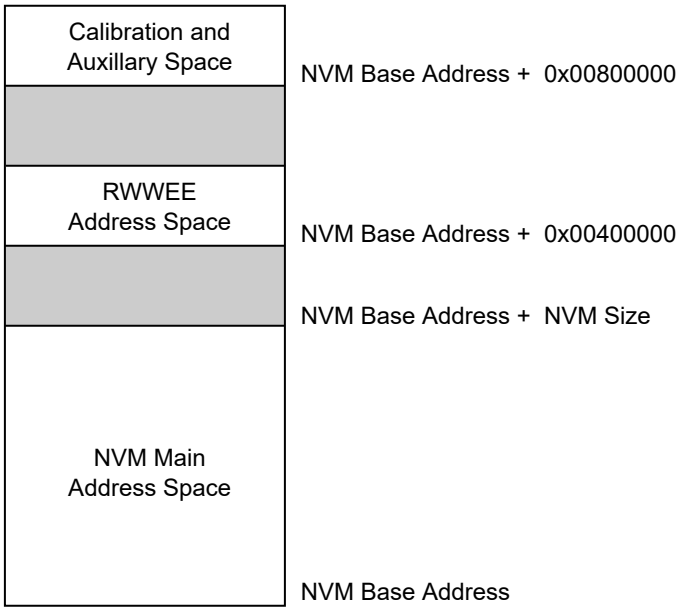

The lower rows in the NVM main address space can be allocated as a boot loader section by using the BOOTPROT fuses, and the upper rows can be allocated to EEPROM Emulation, as shown in the figure below.

The boot loader section is protected by the lock bit(s) corresponding to this address space and by the BOOTPROT[2:0] fuse. The EEPROM Emulation rows can be written regardless of the region lock status.

The number of rows protected by BOOTPROT is given in Boot Loader Size, the number of rows allocated to the EEPROM Emulation are given in EEPROM Size.

Downloaded from Arrow.com.

Figure 22-4. EEPROM Emulation and Boot Loader Allocation

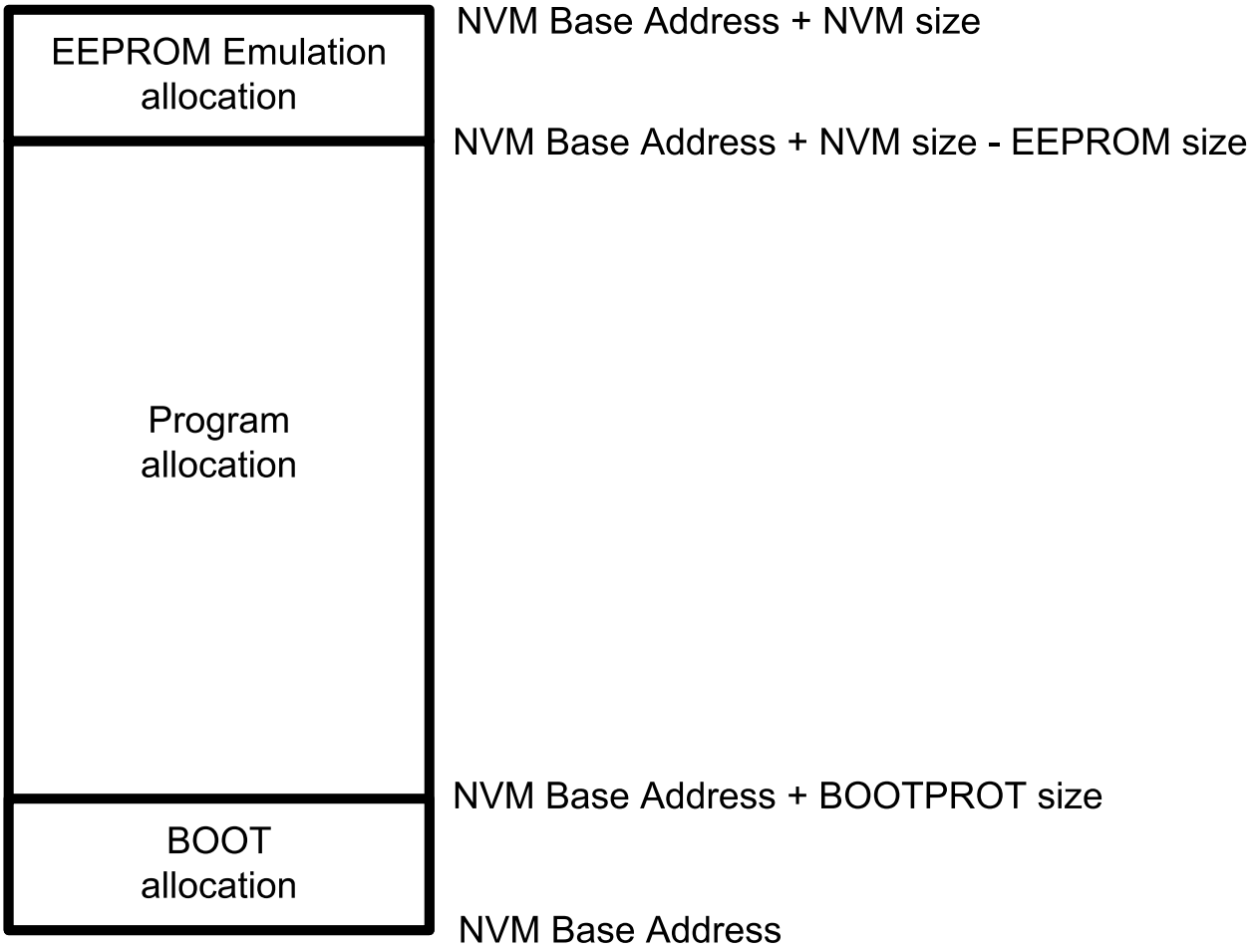

Related Links

10.2 Physical Memory Map

22.6.3 Region Lock Bits

The NVM block is grouped into 16 equally sized regions. The region size is dependent on the Flash memory size, and is given in the table below. Each region has a dedicated lock bit preventing writing and erasing pages in the region. After production, all regions will be unlocked.

Table 22-1. Region Size

Memory Size [KB]	Region Size [KB]
256	16
128	8
64	4
32	2

To lock or unlock a region, the Lock Region and Unlock Region commands are provided. Writing one of these commands will temporarily lock/unlock the region containing the address loaded in the ADDR register. ADDR can be written by software, or the automatically loaded value from a write operation can be used. The new setting will stay in effect until the next Reset, or until the setting is changed again using the Lock and Unlock commands. The current status of the lock can be determined by reading the LOCK register.

Downloaded from Arrow.com.

To change the default lock/unlock setting for a region, the user configuration section of the auxiliary space must be written using the Write Auxiliary Page command. Writing to the auxiliary space will take effect after the next Reset. Therefore, a boot of the device is needed for changes in the lock/unlock setting to take effect. Refer to the Physical Memory Map for calibration and auxiliary space address mapping.

Related Links

10.2 Physical Memory Map

22.6.4 Command and Data Interface

The NVM Controller is addressable from the APB bus, while the NVM main address space is addressable from the AHB bus. Read and automatic page write operations are performed by addressing the NVM main address space or the RWWEE address space directly, while other operations such as manual page writes and row erases must be performed by issuing commands through the NVM Controller.

To issue a command, the CTRLA.CMD bits must be written along with the CTRLA.CMDEX value. When a command is issued, INTFLAG.READY will be cleared until the command has completed. Any commands written while INTFLAG.READY is low will be ignored.

The CTRLB register must be used to control the power reduction mode, read wait states, and the write mode.

22.6.4.1 NVM Read

Reading from the NVM main address space is performed via the AHB bus by addressing the NVM main address space or auxiliary address space directly. Read data is available after the configured number of read wait states (CTRLB.RWS) set in the NVM Controller.

The number of cycles data are delayed to the AHB bus is determined by the read wait states. Examples of using zero and one wait states are shown in the following figure.

Reading the NVM main address space while a programming or erase operation is ongoing on the NVM main array results in an AHB bus stall until the end of the operation. Reading the NVM main array does not stall the bus when the RWWEE array is being programmed or erased.

Figure 22-5. Read Wait State Examples

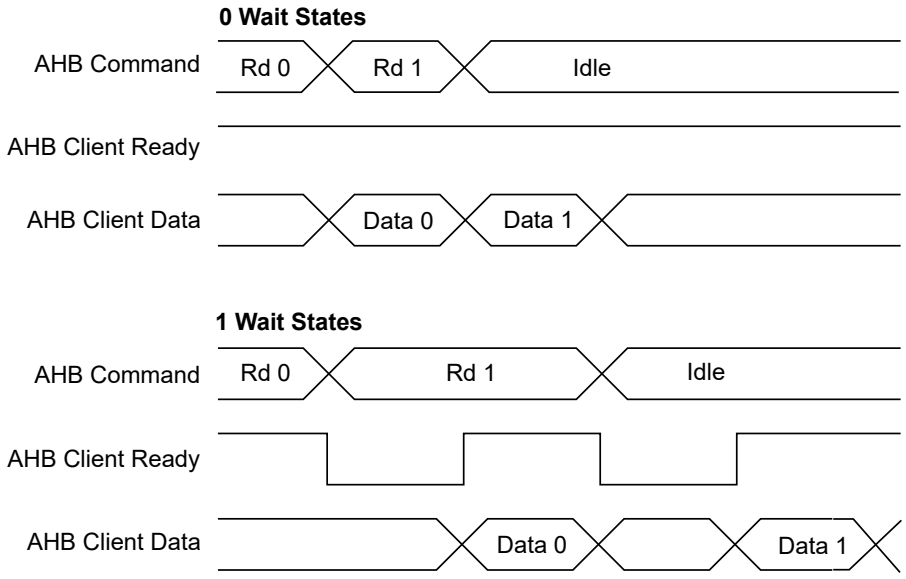

22.6.4.2 RWWEE Read

Reading from the RWW EEPROM address space is performed via the AHB bus by addressing the RWWEE address space directly.

Read timings are similar to regular NVM read timings when access size is Byte or half-Word. The AHB data phase is twice as long in case of full-Word-size access.

Downloaded from Arrow.com.

It is not possible to read the RWWEE area while the NVM main array is being written or erased, whereas the RWWEE area can be written or erased while the main array is being read.

The RWWEE address space is not cached, therefore it is recommended to limit access to this area for performance and power consumption considerations.

22.6.4.3 NVM Write

The NVM Controller requires that an erase must be done before programming. The entire NVM main address space and the RWWEE address space can be erased by a debugger Chip Erase command. Alternatively, rows can be individually erased by the Erase Row command or the RWWEE Erase Row command to erase the NVM main address space or the RWWEE address space, respectively.

After programming the NVM main array, the region that the page resides in can be locked to prevent spurious write or erase sequences. Locking is performed on a per-region basis, and so, locking a region will lock all pages inside the region.

Data to be written to the NVM block are first written to and stored in an internal buffer called the *page buffer*. The page buffer contains the same number of bytes as an NVM page. Writes to the page buffer must be 16 or 32 bits. 8-bit writes to the page buffer are not allowed and will cause a system exception.

Both the NVM main array and the RWWEE array share the same page buffer. Writing to the NVM block via the AHB bus is performed by a load operation to the page buffer. For each AHB bus write, the address is stored in the ADDR register. After the page buffer has been loaded with the required number of bytes, the page can be written to the NVM main array or the RWWEE array by setting CTRLA.CMD to 'Write Page' or 'RWWEE Write Page', respectively, and setting the key value to CMDEX. The LOAD bit in the STATUS register indicates whether the page buffer has been loaded or not. Before writing the page to memory, the accessed row must be erased.

Automatic page writes are enabled by writing the manual write bit to zero (CTRLB.MANW=0). This will trigger a write operation to the page addressed by ADDR when the last location of the page is written.

Because the address is automatically stored in ADDR during the I/O bus write operation, the last given address will be present in the ADDR register. There is no need to load the ADDR register manually, unless a different page in memory is to be written.

22.6.4.3.1 Procedure for Manual Page Writes (CTRLB.MANW=1)

The row to be written to must be erased before the write command is given.

- Write to the page buffer by addressing the NVM main address space directly
- Write the page buffer to memory: CTRL.CMD='Write Page' and CMDEX
- The READY bit in the INTFLAG register will be low while programming is in progress, and access through the AHB will be stalled

22.6.4.3.2 Procedure for Automatic Page Writes (CTRLB.MANW=0)

The row to be written to must be erased before the last write to the page buffer is performed.

Note that partially written pages must be written with a manual write.

- Write to the page buffer by addressing the NVM main address space directly.
  When the last location in the page buffer is written, the page is automatically written to NVM main address space.
- INTFLAG.READY will be zero while programming is in progress and access through the AHB will be stalled.

22.6.4.4 Page Buffer Clear

The page buffer is automatically set to all '1' after a page write is performed. If a partial page has been written and it is desired to clear the contents of the page buffer, the Page Buffer Clear command can be used.

22.6.4.5 Erase Row

Before a page can be written, the row containing that page must be erased. The Erase Row command can be used to erase the desired row in the NVM main address space. The RWWEE Erase Row can be used to erase the desired row in the RWWEE array. Erasing the row sets all bits to '1'. If the row resides in a region that is locked, the erase will not be performed and the Lock Error bit in the Status register (STATUS.LOCKE) will be set.

22.6.4.5.1 Procedure for Erase Row

- Write the address of the row to erase to ADDR. Any address within the row can be used.

Downloaded from Arrow.com.

- Issue an Erase Row command.

Note: The NVM Address bit field in the Address register (ADDR.ADDR) uses 16-bit addressing.

22.6.4.6 Lock and Unlock Region

These commands are used to lock and unlock regions as detailed in section 22.6.3 Region Lock Bits.

22.6.4.7 Set and Clear Power Reduction Mode

The NVM Controller and block can be taken in and out of power reduction mode through the Set and Clear Power Reduction Mode commands. When the NVM Controller and block are in power reduction mode, the Power Reduction Mode bit in the Status register (STATUS.PRM) is set.

22.6.5 NVM User Configuration

The NVM user configuration resides in the auxiliary space. Refer to the Physical Memory Map of the device for calibration and auxiliary space address mapping.

The bootloader resides in the main array starting at offset zero. The allocated boot loader section is write-protected.

Table 22-2. Boot Loader Size

BOOTPROT [2:0]	Rows Protected by BOOTPROT	Boot Loader Size in Bytes
0x7(1)	None	0
0x6	2	512
0x5	4	1024
0x4	8	2048
0x3	16	4096
0x2	32	8192
0x1	64	16384
0x0	128	32768

Note:

1. Default value is 0x7.

The EEPROM[2:0] bits indicate the EEPROM Emulation size, see the table below. The EEPROM Emulation resides in the upper rows of the NVM main address space and is writable, regardless of the region lock status. Note that it is different from the RWWEE Emulation section residing outside of the main Flash.

Table 22-3. EEPROM Emulation Size

EEPROM[2:0]	Rows Allocated to EEPROM Emulation	EEPROM Emulation Size in Bytes
7	None	0
6	1	256
5	2	512
4	4	1024
3	8	2048
2	16	4096
1	32	8192
0	64	16384

Related Links

10.2 Physical Memory Map

Downloaded from Arrow.com.

22.6.6 Security Bit

The security bit allows the entire chip to be locked from external access for code security. The security bit can be written by a dedicated command, Set Security Bit (SSB). Once set, the only way to clear the security bit is through a debugger Chip Erase command. After issuing the SSB command, the PROGE error bit can be checked.

In order to increase the security level it is recommended to enable the internal BOD33 when the security bit is set.

Related Links

13. DSU - Device Service Unit

22.6.7 Cache

The NVM Controller cache reduces the device power consumption and improves system performance when wait states are required. Only the NVM main array address space is cached. It is a direct-mapped cache that implements 8 lines of 64 bits (i.e., 64 Bytes). NVM Controller cache can be enabled by writing a '0' to the Cache Disable bit in the Control B register (CTRLB.CACHEDIS).

The cache can be configured to three different modes using the Read Mode bit group in the Control B register (CTRLB.READMODE).

The INVALL command can be issued using the Command bits in the Control A register to invalidate all cache lines (CTRLA.CMD=INVALL). Commands affecting NVM content automatically invalidate cache lines.

Downloaded from Arrow.com.

22.7 Register Summary

Offset	Name	Bit Pos.	7	6	5	4	3	2	1	0
0x00	CTRLA	7:0		CMD[6:0]						
		15:8	CMDEX[7:0]							
0x02 ... 0x03	Reserved									
0x04	CTRLB	7:0	MANW			RWS[3:0]				
		15:8							SLEEPPRM[1:0]	
		23:16						CACHEDIS	READMODE[1:0]	
		31:24								
0x08	PARAM	7:0	NVMP[7:0]							
		15:8	NVMP[15:8]							
		23:16	RWWEEP[3:0]					PSZ[2:0]		
		31:24	RWWEEP[11:4]							
0x0C	INTENCLR	7:0							ERROR	READY
0x0D ... 0x0F	Reserved									
0x10	INTENSET	7:0							ERROR	READY
0x11 ... 0x13	Reserved									
0x14	INTFLAG	7:0							ERROR	READY
0x15 ... 0x17	Reserved									
0x18	STATUS	7:0				NVME	LOCKE	PROGE	LOAD	PRM
		15:8								SB
0x1A ... 0x1B	Reserved									
0x1C	ADDR	7:0	ADDR[7:0]							
		15:8	ADDR[15:8]							
		23:16			ADDR[21:16]					
		31:24								
0x20	LOCK	7:0	LOCK[7:0]							
		15:8	LOCK[15:8]							

22.8 Register Description

Registers can be 8, 16, or 32 bits wide. Atomic 8-, 16-, and 32-bit accesses are supported. In addition, the 8-bit quarters and 16-bit halves of a 32-bit register, and the 8-bit halves of a 16-bit register can be accessed directly.

Some registers require synchronization when read and/or written. Synchronization is denoted by the "Read-Synchronized" and/or "Write-Synchronized" property in each individual register description.

Some registers are enable-protected, meaning they can only be written when the module is disabled. Enable-protection is denoted by the "Enable-Protected" property in each individual register description.

Downloaded from Arrow.com.

22.8.1 Control A

Name: CTRLA
Offset: 0x00
Reset: 0x0000
Property: PAC Write-Protection

Bit	15	14	13	12	11	10	9	8
	CMDEX[7:0]							
Access	R/W	R/W	R/W	R/W	R/W	R/W	R/W	R/W
Reset	0	0	0	0	0	0	0	0

Bit	7	6	5	4	3	2	1	0
		CMD[6:0]						
Access		R/W	R/W	R/W	R/W	R/W	R/W	R/W
Reset		0	0	0	0	0	0	0

Bits 15:8 – CMDEX[7:0] Command Execution
When this bit group is written to the key value 0xA5, the command written to CMD will be executed. If a value different from the key value is tried, the write will not be performed and the Programming Error bit in the Status register (STATUS.PROGE) will be set. PROGE is also set if a previously written command is not completed yet.
The key value must be written at the same time as CMD. If a command is issued through the APB bus on the same cycle as an AHB bus access, the AHB bus access will be given priority. The command will then be executed when the NVM block and the AHB bus are idle.
INTFLAG.READY must be '1' when the command is issued.
Bit 0 of the CMDEX bit group will read back as '1' until the command is issued.
Note: The NVM Address bit field in the Address register (ADDR.ADDR) uses 16-bit addressing.

Bits 6:0 – CMD[6:0] Command
These bits define the command to be executed when the CMDEX key is written.

CMD[6:0]	Group Configuration	Description
0x00-0x01	-	Reserved
0x02	ER	Erase Row - Erases the row addressed by the ADDR register in the NVM main array.
0x03	-	Reserved
0x04	WP	Write Page - Writes the contents of the page buffer to the page addressed by the ADDR register.
0x05	EAR	Erase Auxiliary Row - Erases the auxiliary row addressed by the ADDR register. This command can be given only when the Security bit is not set and only to the User Configuration Row.
0x06	WAP	Write Auxiliary Page - Writes the contents of the page buffer to the page addressed by the ADDR register. This command can be given only when the Security bit is not set and only to the User Configuration Row.
0x07-0x0E	-	Reserved
0x0F	-	Reserved
0x1A-0x19	-	Reserved
0x1A	RWWEEER	RWWEE Erase Row - Erases the row addressed by the ADDR register in the RWWEE array.
0x1B	-	Reserved
0x1C	RWWEEWP	RWWEE Write Page - Writes the contents of the page buffer to the page addressed by the ADDR register in the RWWEE array.
0x1D-0x3F	-	Reserved
0x40	LR	Lock Region - Locks the region containing the address location in the ADDR register.

Downloaded from Arrow.com.

.....continued

CMD[6:0]	Group Configuration	Description
0x41	UR	Unlock Region - Unlocks the region containing the address location in the ADDR register.
0x42	SPRM	Sets the Power Reduction mode.
0x43	CPRM	Clears the Power Reduction mode.
0x44	PBC	Page Buffer Clear - Clears the page buffer.
0x45	SSB	Set Security Bit - Sets the Security bit by writing 0x00 to the first byte in the lockbit row.
0x46	INVALL	Invalidates all cache lines.
0x47	LDR	Lock Data Region - Locks the data region containing the address location in the ADDR register. When the security extension is enabled, only secure access can lock secure regions.
0x48	UDR	Unlock Data Region - Unlocks the data region containing the address location in the ADDR register. When the security extension is enabled, only secure access can unlock secure regions.
0x47-0x7F	-	Reserved

Downloaded from Arrow.com.

22.8.2 Control B

Name: CTRLB
Offset: 0x04
Reset: 0x00000080
Property: PAC Write-Protection

Bit	31	30	29	28	27	26	25	24
Access								
Reset								

Bit	23	22	21	20	19	18	17	16
						CACHEDIS	READMODE[1:0]	
Access						R/W	R/W	R/W
Reset						0	0	0

Bit	15	14	13	12	11	10	9	8
							SLEEPPRM[1:0]	
Access							R/W	R/W
Reset							0	0

Bit	7	6	5	4	3	2	1	0
	MANW			RWS[3:0]				
Access	R/W			R/W	R/W	R/W	R/W	
Reset	1			0	0	0	0	

Bit 18 – CACHEDIS Cache Disable
This bit is used to disable the cache.

Value	Description
0	The cache is enabled
1	The cache is disabled

Bits 17:16 – READMODE[1:0] NVMCTRL Read Mode

Value	Name	Description
0x0	NO_MISS_PENALTY	The NVM Controller (cache system) does not insert wait states on a cache miss. Gives the best system performance.
0x1	LOW_POWER	Reduces power consumption of the cache system, but inserts a wait state each time there is a cache miss. This mode may not be relevant if CPU performance is required, as the application will be stalled and may lead to increased run time.
0x2	DETERMINISTIC	The cache system ensures that a cache hit or miss takes the same amount of time, determined by the number of programmed Flash wait states. This mode can be used for real-time applications that require deterministic execution timings.
0x3	Reserved	

Bits 9:8 – SLEEPPRM[1:0] Power Reduction Mode during Sleep
Indicates the Power Reduction Mode during sleep.

Value	Name	Description
0x0	WAKEUPACCESS	NVM block enters low-power mode when entering sleep. NVM block exits low-power mode upon first access.
0x1	WAKEUPINSTANT	NVM block enters low-power mode when entering sleep. NVM block exits low-power mode when exiting sleep.
0x2	Reserved	
0x3	DISABLED	Auto power reduction disabled.

Downloaded from Arrow.com.

Bit 7 – MANW Manual Write
Note that reset value of this bit is '1'.

Value	Description
0	Writing to the last word in the page buffer will initiate a write operation to the page addressed by the last write operation. This includes writes to memory and auxiliary rows.
1	Write commands must be issued through the CTRLA.CMD register.

Bits 4:1 – RWS[3:0] NVM Read Wait States
These bits control the number of wait states for a read operation. '0' indicates zero wait states, '1' indicates one wait state, etc., up to 15 wait states.
This register is initialized to 0 wait states. Software can change this value based on the NVM access time and system frequency.

Downloaded from Arrow.com.

22.8.3 NVM Parameter

Name: PARAM
Offset: 0x08
Reset: 0x000XXXXX
Property: PAC Write-Protection

Bit	31	30	29	28	27	26	25	24
	RWWEEP[11:4]							
Access	R	R	R	R	R	R	R	R
Reset	0	0	0	0	0	0	0	0

Bit	23	22	21	20	19	18	17	16
	RWWEEP[3:0]					PSZ[2:0]		
Access	R	R	R	R		R	R	R
Reset	0	0	0	0		x	x	x

Bit	15	14	13	12	11	10	9	8
	NVMP[15:8]							
Access	R	R	R	R	R	R	R	R
Reset	x	x	x	x	x	x	x	x

Bit	7	6	5	4	3	2	1	0
	NVMP[7:0]							
Access	R	R	R	R	R	R	R	R
Reset	x	x	x	x	x	x	x	x

Bits 31:20 – RWWEEP[11:0] Read While Write EEPROM Emulation area Pages
Indicates the number of pages in the RWW EEPROM Emulation address space.

Bits 18:16 – PSZ[2:0] Page Size
Indicates the page size. Not all devices of the device families will provide all the page sizes indicated in the table.

Value	Name	Description
0x0	8	8 bytes
0x1	16	16 bytes
0x2	32	32 bytes
0x3	64	64 bytes
0x4	128	128 bytes
0x5	256	256 bytes
0x6	512	512 bytes
0x7	1024	1024 bytes

Bits 15:0 – NVMP[15:0] NVM Pages
Indicates the number of pages in the NVM main address space.

Downloaded from Arrow.com.

22.8.4 Interrupt Enable Clear

Name: INTENCLR
Offset: 0x0C
Reset: 0x00
Property: PAC Write-Protection

This register allows the user to disable an interrupt without doing a read-modify-write operation. Changes in this register will also be reflected in the Interrupt Enable Set register (INTENSET).

Bit	7	6	5	4	3	2	1	0
							ERROR	READY
Access							R/W	R/W
Reset							0	0

Bit 1 – ERROR Error Interrupt Enable
Writing a '0' to this bit has no effect.
Writing a '1' to this bit clears the ERROR interrupt enable.
This bit will read as the current value of the ERROR interrupt enable.

Bit 0 – READY NVM Ready Interrupt Enable
Writing a '0' to this bit has no effect.
Writing a '1' to this bit clears the READY interrupt enable.
This bit will read as the current value of the READY interrupt enable.

Downloaded from Arrow.com.

22.8.5 Interrupt Enable Set

Name: INTENSET
Offset: 0x10
Reset: 0x00
Property: PAC Write-Protection

This register allows the user to enable an interrupt without doing a read-modify-write operation. Changes in this register will also be reflected in the Interrupt Enable Clear register (INTENCLR).

Bit	7	6	5	4	3	2	1	0
							ERROR	READY
Access							R/W	R/W
Reset							0	0

Bit 1 – ERROR Error Interrupt Enable
Writing a '0' to this bit has no effect.
Writing a '1' to this bit sets the ERROR interrupt enable.
This bit will read as the current value of the ERROR interrupt enable.

Bit 0 – READY NVM Ready Interrupt Enable
Writing a '0' to this bit has no effect.
Writing a '1' to this bit sets the READY interrupt enable.
This bit will read as the current value of the READY interrupt enable.

Downloaded from Arrow.com.

22.8.6 Interrupt Flag Status and Clear

Name: INTFLAG
Offset: 0x14
Reset: 0x00
Property: –

Bit	7	6	5	4	3	2	1	0
							ERROR	READY
Access							R/W	R
Reset							0	0

Bit 1 – ERROR Error
This flag is set on the occurrence of an NVME, LOCKE or PROGE error.
This bit can be cleared by writing a '1' to its bit location.

Value	Description
0	No errors have been received since the last clear.
1	At least one error has occurred since the last clear.

Bit 0 – READY NVM Ready

Value	Description
0	The NVM controller is busy programming or erasing.
1	The NVM controller is ready to accept a new command.

Downloaded from Arrow.com.

22.8.7 Status

Name: STATUS
Offset: 0x18
Reset: 0x0X00
Property: –

Bit	15	14	13	12	11	10	9	8
								SB
Access								R
Reset								x

Bit	7	6	5	4	3	2	1	0
				NVME	LOCKE	PROGE	LOAD	PRM
Access				R/W	R/W	R/W	R/W	R
Reset				0	0	0	0	0

Bit 8 – SB Security Bit Status

Value	Description
0	The Security bit is inactive.
1	The Security bit is active.

Bit 4 – NVME NVM Error
This bit can be cleared by writing a '1' to its bit location.

Value	Description
0	No programming or erase errors have been received from the NVM controller since this bit was last cleared.
1	At least one error has been registered from the NVM Controller since this bit was last cleared.

Bit 3 – LOCKE Lock Error Status
This bit can be cleared by writing a '1' to its bit location.

Value	Description
0	No programming of any locked lock region has happened since this bit was last cleared.
1	Programming of at least one locked lock region has happened since this bit was last cleared.

Bit 2 – PROGE Programming Error Status
This bit can be cleared by writing a '1' to its bit location.

Value	Description
0	No invalid commands or bad keywords were written in the NVM Command register since this bit was last cleared.
1	An invalid command and/or a bad keyword was/were written in the NVM Command register since this bit was last cleared.

Bit 1 – LOAD NVM Page Buffer Active Loading
This bit indicates that the NVM page buffer has been loaded with one or more words. Immediately after an NVM load has been performed, this flag is set. It remains set until a page write or a page buffer clear (PBCLR) command is given.
This bit can be cleared by writing a '1' to its bit location.

Bit 0 – PRM Power Reduction Mode
This bit indicates the current NVM power reduction state. The NVM block can be set in power reduction mode in two ways: through the command interface or automatically when entering sleep with SLEEPPRM set accordingly.
PRM can be cleared in three ways: through AHB access to the NVM block, through the command interface (SPRM and CPRM) or when exiting sleep with SLEEPPRM set accordingly.

Value	Description
0	NVM is not in power reduction mode.

Downloaded from Arrow.com.

Value	Description
1	NVM is in power reduction mode.

Downloaded from Arrow.com.

22.8.8 Address

Name: ADDR
Offset: 0x1C
Reset: 0x00000000
Property: PAC Write-Protection

Bit	31	30	29	28	27	26	25	24
Access								
Reset								

Bit	23	22	21	20	19	18	17	16
			ADDR[21:16]					
Access			R/W	R/W	R/W	R/W	R/W	R/W
Reset			0	0	0	0	0	0

Bit	15	14	13	12	11	10	9	8
	ADDR[15:8]							
Access	R/W	R/W	R/W	R/W	R/W	R/W	R/W	R/W
Reset	0	0	0	0	0	0	0	0

Bit	7	6	5	4	3	2	1	0
	ADDR[7:0]							
Access	R/W	R/W	R/W	R/W	R/W	R/W	R/W	R/W
Reset	0	0	0	0	0	0	0	0

Bits 21:0 – ADDR[21:0] NVM Address
ADDR drives the hardware half-word offset from the start address of the corresponding NVM section when a command is executed using CMDEX. This register is also automatically updated when writing to the page buffer. The effective address for the operation is Start address of the section + 2*ADDR.
Example:
For erasing the 3rd row in the Flash memory, spanning from 0x00000200 to 0x000002FF, ADDR must be written with the half-word offset address of any half-word within this range, that is any value between 0x100 and 0x17F.
For erasing the 5th row in the RWWEE memory, spanning from 0x00400400 to 0x004004FF, ADDR should be written with the half-word offset address of any half-word within this range, that is any value between 0x200 and 0x27F.

Downloaded from Arrow.com.

22.8.9 Lock Section

Name: LOCK
Offset: 0x20
Reset: 0xXXXX
Property: –

Bit	15	14	13	12	11	10	9	8
	LOCK[15:8]							
Access	R	R	R	R	R	R	R	R
Reset	x	x	x	x	x	x	x	x

Bit	7	6	5	4	3	2	1	0
	LOCK[7:0]							
Access	R	R	R	R	R	R	R	R
Reset	x	x	x	x	x	x	x	x

Bits 15:0 – LOCK[15:0] Region Lock Bits
To set or clear these bits, the CMD register must be used.
Default state after erase will be unlocked (0xFFFF).
Default state after reset will be loaded from the NVM User Row.

Value	Description
0	The corresponding lock region is locked.
1	The corresponding lock region is not locked.

Downloaded from Arrow.com.

23. PORT - I/O Pin Controller

23.1 Overview

The IO Pin Controller (PORT) controls the I/O pins of the device. The I/O pins are organized in a series of groups, collectively referred to as a PORT group. Each PORT group can have up to 32 pins that can be configured and controlled individually or as a group. The number of PORT groups on a device may depend on the package/number of pins. Each pin may either be used for general-purpose I/O under direct application control or be assigned to an embedded device peripheral. When used for general-purpose I/O, each pin can be configured as input or output, with highly configurable driver and pull settings.

All I/O pins have true read-modify-write functionality when used for general-purpose I/O; the direction or the output value of one or more pins may be changed (set, reset or toggled) explicitly without unintentionally changing the state of any other pins in the same port group by a single, atomic 8-, 16- or 32-bit write.

The PORT is connected to the high-speed bus matrix through an AHB/APB bridge. The Pin Direction, Data Output Value and Data Input Value registers may also be accessed using the low-latency CPU local bus (IOBUS; ARM® single-cycle I/O port) .

23.2 Features

- Selectable input and output configuration for each individual pin
- Software-controlled multiplexing of peripheral functions on I/O pins
- Flexible pin configuration through a dedicated Pin Configuration register
- Configurable output driver and pull settings:
  - Totem-pole (push-pull)
  - Pull configuration
  - Driver strength
- Configurable input buffer and pull settings:
  - Internal pull-up or pull-down
  - Input sampling criteria
  - Input buffer can be disabled if not needed for lower power consumption
  - Read-Modify-Write support for output value (OUTCLR/OUTSET/OUTGL) and pin direction (DIRCLR/DIRSET/DIRTGL)

Downloaded from Arrow.com.

23.3 Block Diagram

Figure 23-1. PORT Block Diagram

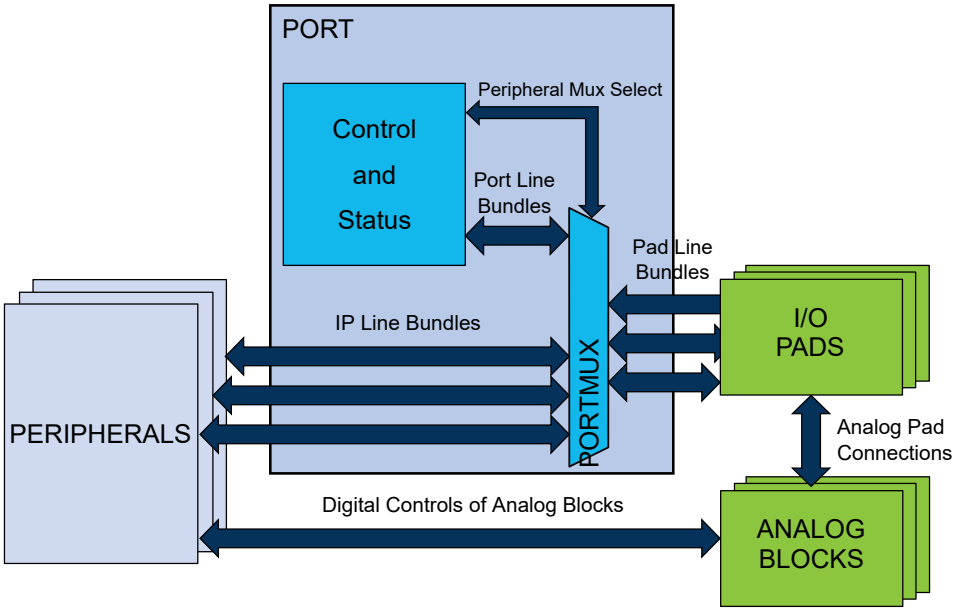

23.4 Signal Description

Table 23-1. Signal description for PORT

Signal name	Type	Description
Pxy	Digital I/O	General-purpose I/O pin y in group x

Refer to the *I/O Multiplexing and Considerations* for details on the pin mapping for this peripheral. One signal can be mapped on several pins.

Related Links

7. I/O Multiplexing and Considerations

23.5 Product Dependencies

In order to use this peripheral, other parts of the system must be configured correctly as follows.

23.5.1 I/O Lines

The I/O lines of the PORT are mapped to pins of the physical device. The following naming scheme is used:

Each line bundle with up to 32 lines is assigned an identifier 'xy', with letter x=A, B, C… and two-digit number y=00, 01, …31. Examples: A24, C03.

PORT pins are labeled 'Pxy' accordingly, for example PA24, PC03. This identifies each pin in the device uniquely.

Each pin may be controlled by one or more peripheral multiplexer settings, which allow the pad to be routed internally to a dedicated peripheral function. When the setting is enabled, the selected peripheral has control over the output state of the pad, as well as the ability to read the current physical pad state. Refer to *I/O Multiplexing and Considerations* for details.

Device-specific configurations may cause some lines (and the corresponding Pxy pin) not to be implemented.

Downloaded from Arrow.com.

Related Links
7. I/O Multiplexing and Considerations

23.5.2 Power Management

During Reset, all PORT lines are configured as inputs with input buffers, output buffers and pull disabled.

The PORT peripheral will continue operating in any sleep mode where its source clock is running.

23.5.3 Clocks

The PORT bus clock (CLK_PORT_APB) can be enabled and disabled in the Power Manager, and the default state of CLK_PORT_APB can be found in the *Peripheral Clock Masking* section in *PM – Power Manager*.

The PORT requires an APB clock, which may be divided from the CPU main clock and allows the CPU to access the registers of PORT through the high-speed matrix and the AHB/APB bridge.

The PORT also requires an AHB clock for CPU IOBUS accesses to the PORT. That AHB clock is the internal PORT clock.

The priority of IOBUS accesses is higher than APB accesses. One clock cycle latency can be observed on the APB access in case of concurrent PORT accesses.

Related Links
16.6.2.6 Peripheral Clock Masking

23.5.4 DMA

Not applicable.

23.5.5 Interrupts

Not applicable.

23.5.6 Events

Not applicable.

23.5.7 Debug Operation

When the CPU is halted in debug mode, this peripheral will continue normal operation.

23.5.8 Register Access Protection

All registers with write-access can be optionally write-protected by the Peripheral Access Controller (PAC).

Note: Optional write-protection is indicated by the "PAC Write-Protection" property in the register description.

Write-protection does not apply for accesses through an external debugger.

Related Links
11.6 Peripheral Access Controller (PAC)

23.5.9 Analog Connections

Analog functions are connected directly between the analog blocks and the I/O pads using analog buses. However, selecting an analog peripheral function for a given pin will disable the corresponding digital features of the pad.

23.5.10 CPU Local Bus

The CPU local bus (IOBUS) is an interface that connects the CPU directly to the PORT. It is a single-cycle bus interface, which does not support wait states. It supports 8-bit, 16-bit and 32-bit sizes.

This bus is generally used for low latency operation. The Data Direction (DIR) and Data Output Value (OUT) registers can be read, written, set, cleared or be toggled using this bus, and the Data Input Value (IN) registers can be read.

Since the IOBUS cannot wait for IN register resynchronization, the Control register (CTRL) must be configured to continuous sampling of all pins that need to be read via the IOBUS in order to prevent stale data from being read.

Note: Refer to the *Product Mapping* chapter for the IOBUS address.

Downloaded from Arrow.com.

23.6 Functional Description

Figure 23-2. Overview of the PORT

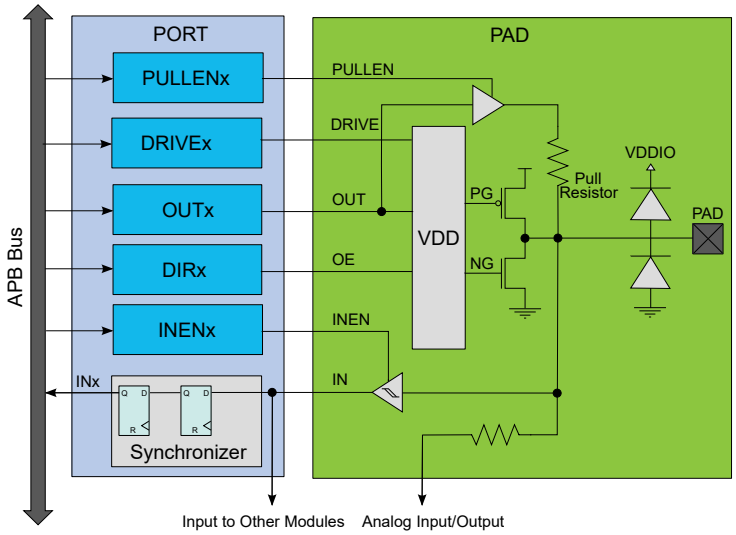

23.6.1 Principle of Operation

Each PORT group of up to 32 pins is controlled by the registers in PORT, as described in the figure. These registers in PORT are duplicated for each PORT group, with increasing base addresses. The number of PORT groups may depend on the package/number of pins.

Figure 23-3. Overview of the peripheral functions multiplexing

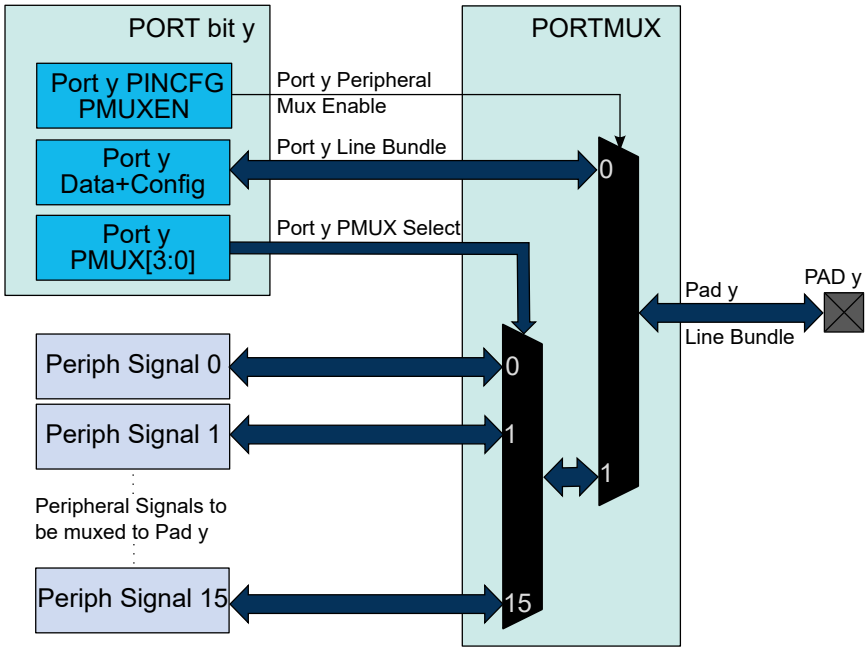

The I/O pins of the device are controlled by PORT peripheral registers. Each port pin has a corresponding bit in the Data Direction (DIR) and Data Output Value (OUT) registers to enable that pin as an output and to define the Output state.

The direction of each pin in a PORT group is configured by the DIR register. If a bit in DIR is set to '1', the corresponding pin is configured as an output pin. If a bit in DIR is set to '0', the corresponding pin is configured as an input pin.

Downloaded from Arrow.com.

When the direction is set as output, the corresponding bit in the OUT register will set the level of the pin. If bit y in OUT is written to '1', pin y is driven HIGH. If bit y in OUT is written to '0', pin y is driven LOW. Pin configuration can be set by Pin Configuration (PINCFGy) registers, with y=00, 01, ..31 representing the pin number within the group.

The Data Input Value (IN) is set as the input value of a port pin with resynchronization to the PORT clock. To reduce power consumption, these input synchronizers can be clocked only when system requires reading the input value, as specified in the SAMPLING field of the Control register (CTRL). The value of the pin can always be read, whether the pin is configured as input or output. If the Input Enable bit in the Pin Configuration registers (PINCFGy.INEN) is '0', the input value will not be sampled.

In PORT, the Peripheral Multiplexer Enable bit in the PINCFGy register (PINCFGy.PMUXEN) can be written to '1' to enable the connection between peripheral functions and individual I/O pins. The Peripheral Multiplexing n (PMUXn) registers select the peripheral function for the corresponding pin. This will override the connection between the PORT and that I/O pin, and connect the selected peripheral signal to the particular I/O pin instead of the PORT line bundle.

23.6.2 Basic Operation

23.6.2.1 Initialization

After reset, all standard function device I/O pads are connected to the PORT with outputs tri-stated and input buffers disabled, even if there is no clock running.

However, specific pins, such as those used for connection to a debugger, may be configured differently, as required by their special function.

23.6.2.2 Operation

Each I/O pin Pxy can be controlled by the registers in PORT. Each PORT group x has its own set of PORT registers, with a base address at byte address (PORT + 0x80 * group index) (A corresponds to group index 0, B to 1, etc...). Within that set of registers, the pin index is y, from 0 to 31.

Refer to *I/O Multiplexing and Considerations* for details on available pin configuration and PORT groups.

Configuring Pins as Output

To use pin Pxy as an *output*, write bit y of the DIR register to '1'. This can also be done by writing bit y in the DIRSET register to '1' - this will avoid disturbing the configuration of other pins in that group. The y bit in the OUT register must be written to the desired output value.

Similarly, writing an OUTSET bit to '1' will set the corresponding bit in the OUT register to '1'. Writing a bit in OUTCLR to '1' will set that bit in OUT to zero. Writing a bit in OUTTGL to '1' will toggle that bit in OUT.

Configuring Pins as Input

To use pin Pxy as an *input*, bit y in the DIR register must be written to '0'. This can also be done by writing bit y in the DIRCLR register to '1' - this will avoid disturbing the configuration of other pins in that group. The input value can be read from bit y in register IN as soon as the INEN bit in the Pin Configuration register (PINCFGy.INEN) is written to '1' to enable the pin's input buffer.

By default, the input synchronizer is clocked only when an input read is requested. This will delay the read operation by two cycles of the PORT clock. To remove the delay, the input synchronizers for each PORT group of eight pins can be configured to be always active, but this will increase power consumption. This is enabled by writing '1' to the corresponding SAMPLINGn bit field of the CTRL register, see CTRL.SAMPLING for details.

Using Alternative Peripheral Functions

To use pin Pxy as one of the available peripheral functions, the corresponding PMUXEN bit of the PINCFGy register must be '1'. The PINCFGy register for pin Pxy is at byte offset (PINCFG0 + y).

The peripheral function can be selected by setting the PMUXO or PMUXE in the PMUXn register. The PMUXO/PMUXE is at byte offset PMUX0 + (y/2). The chosen peripheral must also be configured and enabled.

Related Links

7. I/O Multiplexing and Considerations

Downloaded from Arrow.com.

23.6.3 I/O Pin Configuration

The Pin Configuration register (PINCFGy) is used for additional I/O pin configuration. A pin can be set in a totem-pole or pull configuration.

As pull configuration is done through the Pin Configuration register, all intermediate PORT states during switching of pin direction and pin values are avoided.

The I/O pin configurations are described further in this chapter, and summarized in Table 23-2.

23.6.3.1 Pin Configurations Summary

Table 23-2. Pin Configurations Summary

DIR	INEN	PULLEN	OUT	Configuration
0	0	0	X	Reset or analog I/O: all digital disabled
0	0	1	0	Pull-down; input buffer disabled
0	0	1	1	Pull-up; input buffer disabled
0	1	0	X	Input
0	1	1	0	Input with pull-down
0	1	1	1	Input with pull-up
1	0	X	X	Output; input buffer disabled
1	1	X	X	Output; input buffer enabled

23.6.3.2 Input Configuration

Figure 23-4. I/O configuration - Standard Input

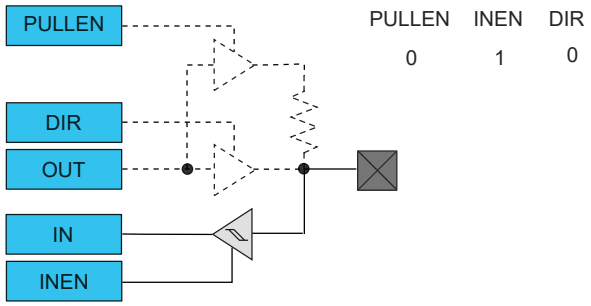

Figure 23-5. I/O Configuration - Input with Pull

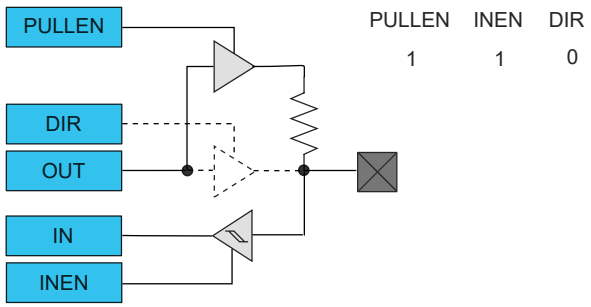

Note: When pull is enabled, the pull value is defined by the OUT value.

23.6.3.3 Totem-Pole Output

When configured for totem-pole (push-pull) output, the pin is driven low or high according to the corresponding bit setting in the OUT register. In this configuration there is no current limitation for sink or source other than what the pin is capable of. If the pin is configured for input, the pin will float if no external pull is connected.

Note: Enabling the output driver will automatically disable pull.

Downloaded from Arrow.com.

Figure 23-6. I/O Configuration - Totem-Pole Output with Disabled Input

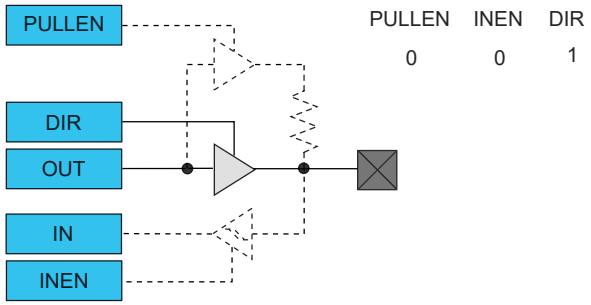

Figure 23-7. I/O Configuration - Totem-Pole Output with Enabled Input

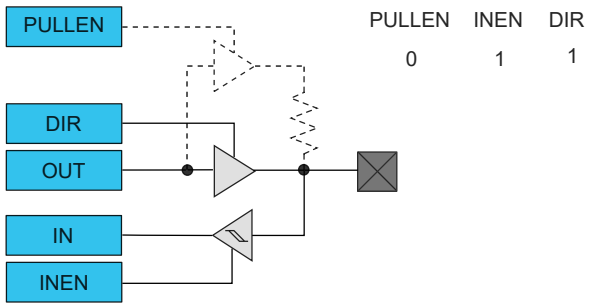

Figure 23-8. I/O Configuration - Output with Pull

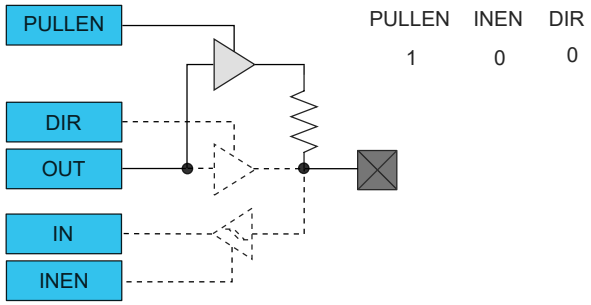

23.6.3.4 Digital Functionality Disabled

Neither Input nor Output functionality are enabled.

Figure 23-9. I/O Configuration - Reset or Analog I/O: Digital Output, Input and Pull Disabled

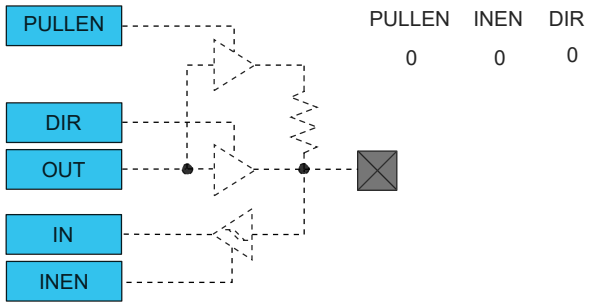

23.6.4 PORT Access Priority

The PORT is accessed by different systems:

- The ARM® CPU through the ARM® single-cycle I/O port (IOBUS)
- The ARM® CPU through the high-speed matrix and the AHB/APB bridge (APB)

The following priority is adopted:

Downloaded from Arrow.com.

1. ARM® CPU IOBUS (No wait tolerated)
2. APB

Downloaded from Arrow.com.

23.7 Register Summary

The I/O pins are assembled in pin groups with up to 32 pins. Group 0 consists of the PA pins, and group 1 is for the PB pins, etc. Each pin group has its own PORT registers, with a 0x80 address spacing. For example, the register address offset for the Data Direction (DIR) register for group 0 (PA00 to PA31) is 0x00, and the register address offset for the DIR register for group 1 (PB00 to PB31) is 0x80.

Offset	Name	Bit Pos.	7	6	5	4	3	2	1	0
0x00	DIR	7:0	DIR[7:0]							
		15:8	DIR[15:8]							
		23:16	DIR[23:16]							
		31:24	DIR[31:24]							
0x04	DIRCLR	7:0	DIRCLR[7:0]							
		15:8	DIRCLR[15:8]							
		23:16	DIRCLR[23:16]							
		31:24	DIRCLR[31:24]							
0x08	DIRSET	7:0	DIRSET[7:0]							
		15:8	DIRSET[15:8]							
		23:16	DIRSET[23:16]							
		31:24	DIRSET[31:24]							
0x0C	DIRTGL	7:0	DIRTGL[7:0]							
		15:8	DIRTGL[15:8]							
		23:16	DIRTGL[23:16]							
		31:24	DIRTGL[31:24]							
0x10	OUT	7:0	OUT[7:0]							
		15:8	OUT[15:8]							
		23:16	OUT[23:16]							
		31:24	OUT[31:24]							
0x14	OUTCLR	7:0	OUTCLR[7:0]							
		15:8	OUTCLR[15:8]							
		23:16	OUTCLR[23:16]							
		31:24	OUTCLR[31:24]							
0x18	OUTSET	7:0	OUTSET[7:0]							
		15:8	OUTSET[15:8]							
		23:16	OUTSET[23:16]							
		31:24	OUTSET[31:24]							
0x1C	OUTTGL	7:0	OUTTGL[7:0]							
		15:8	OUTTGL[15:8]							
		23:16	OUTTGL[23:16]							
		31:24	OUTTGL[31:24]							
0x20	IN	7:0	IN[7:0]							
		15:8	IN[15:8]							
		23:16	IN[23:16]							
		31:24	IN[31:24]							
0x24	CTRL	7:0	SAMPLING[7:0]							
		15:8	SAMPLING[15:8]							
		23:16	SAMPLING[23:16]							
		31:24	SAMPLING[31:24]							
0x28	WRCONFIG	7:0	PINMASK[7:0]							
		15:8	PINMASK[15:8]							
		23:16		DRVSTR				PULLEN	INEN	PMUXEN
		31:24	HWSEL	WRPINCFG		WRPMUX		PMUX[3:0]		
0x2C ... 0x2F	Reserved									
0x30	PMUX0	7:0	PMUXO[3:0]					PMUXE[3:0]		
...										
0x3F	PMUX15	7:0	PMUXO[3:0]					PMUXE[3:0]		
0x40	PINCFG0	7:0		DRVSTR				PULLEN	INEN	PMUXEN
...										

Downloaded from Arrow.com.

.....continued

Offset	Name	Bit Pos.	7	6	5	4	3	2	1	0
0x5F	PINCFG31	7:0		DRVSTR				PULLEN	INEN	PMUXEN

23.8 Register Description

Registers can be 8, 16, or 32 bits wide. Atomic 8-, 16- and 32-bit accesses are supported. In addition, the 8-bit quarters and 16-bit halves of a 32-bit register, and the 8-bit halves of a 16-bit register can be accessed directly.

Some registers are optionally write-protected by the Peripheral Access Controller (PAC). Optional PAC write-protection is denoted by the "PAC Write-Protection" property in each individual register description. For details, refer to 23.5.8 Register Access Protection.

Downloaded from Arrow.com.

23.8.1 Data Direction

Name: DIR
Offset: 0x00
Reset: 0x00000000
Property: PAC Write-Protection

This register allows the user to configure one or more I/O pins as an input or output. This register can be manipulated without doing a read-modify-write operation by using the Data Direction Toggle (DIRTGL), Data Direction Clear (DIRCLR) and Data Direction Set (DIRSET) registers.

Tip: The I/O pins are assembled in pin groups (”PORT groups”) with up to 32 pins. Group 0 consists of the PA pins, group 1 is for the PB pins, etc. Each pin group has its own PORT registers, with a 0x80 address spacing. For example, the register address offset for the Data Direction (DIR) register for group 0 (PA00 to PA31) is 0x00, and the register address offset for the DIR register for group 1 (PB00 to PB31) is 0x80.

Bit	31	30	29	28	27	26	25	24
	DIR[31:24]							
Access	RW	RW	RW	RW	RW	RW	RW	RW
Reset	0	0	0	0	0	0	0	0

Bit	23	22	21	20	19	18	17	16
	DIR[23:16]							
Access	RW	RW	RW	RW	RW	RW	RW	RW
Reset	0	0	0	0	0	0	0	0

Bit	15	14	13	12	11	10	9	8
	DIR[15:8]							
Access	RW	RW	RW	RW	RW	RW	RW	RW
Reset	0	0	0	0	0	0	0	0

Bit	7	6	5	4	3	2	1	0
	DIR[7:0]							
Access	RW	RW	RW	RW	RW	RW	RW	RW
Reset	0	0	0	0	0	0	0	0

Bits 31:0 – DIR[31:0] Port Data Direction
These bits set the data direction for the individual I/O pins in the PORT group.

Value	Description
0	The corresponding I/O pin in the PORT group is configured as an input.
1	The corresponding I/O pin in the PORT group is configured as an output.

Downloaded from Arrow.com.

23.8.2 Data Direction Clear

Name: DIRCLR
Offset: 0x04
Reset: 0x00000000
Property: PAC Write-Protection

This register allows the user to set one or more I/O pins as an input, without doing a read-modify-write operation. Changes in this register will also be reflected in the Data Direction (DIR), Data Direction Toggle (DIRTGL) and Data Direction Set (DIRSET) registers.

Tip: The I/O pins are assembled in pin groups (”PORT groups”) with up to 32 pins. Group 0 consists of the PA pins, group 1 is for the PB pins, etc. Each pin group has its own PORT registers, with a 0x80 address spacing. For example, the register address offset for the Data Direction (DIR) register for group 0 (PA00 to PA31) is 0x00, and the register address offset for the DIR register for group 1 (PB00 to PB31) is 0x80.

Bit	31	30	29	28	27	26	25	24
	DIRCLR[31:24]							
Access	RW	RW	RW	RW	RW	RW	RW	RW
Reset	0	0	0	0	0	0	0	0

Bit	23	22	21	20	19	18	17	16
	DIRCLR[23:16]							
Access	RW	RW	RW	RW	RW	RW	RW	RW
Reset	0	0	0	0	0	0	0	0

Bit	15	14	13	12	11	10	9	8
	DIRCLR[15:8]							
Access	RW	RW	RW	RW	RW	RW	RW	RW
Reset	0	0	0	0	0	0	0	0

Bit	7	6	5	4	3	2	1	0
	DIRCLR[7:0]							
Access	RW	RW	RW	RW	RW	RW	RW	RW
Reset	0	0	0	0	0	0	0	0

Bits 31:0 – DIRCLR[31:0] Port Data Direction Clear
Writing a '0' to a bit has no effect.
Writing a '1' to a bit will clear the corresponding bit in the DIR register, which configures the I/O pin as an input.

Value	Description
0	The corresponding I/O pin in the PORT group will keep its configuration.
1	The corresponding I/O pin in the PORT group is configured as input.

Downloaded from Arrow.com.

23.8.3 Data Direction Set

Name: DIRSET
Offset: 0x08
Reset: 0x00000000
Property: PAC Write-Protection

This register allows the user to set one or more I/O pins as an output, without doing a read-modify-write operation. Changes in this register will also be reflected in the Data Direction (DIR), Data Direction Toggle (DIRTGL) and Data Direction Clear (DIRCLR) registers.

Tip: The I/O pins are assembled in pin groups (”PORT groups”) with up to 32 pins. Group 0 consists of the PA pins, group 1 is for the PB pins, etc. Each pin group has its own PORT registers, with a 0x80 address spacing. For example, the register address offset for the Data Direction (DIR) register for group 0 (PA00 to PA31) is 0x00, and the register address offset for the DIR register for group 1 (PB00 to PB31) is 0x80.

Bit	31	30	29	28	27	26	25	24
	DIRSET[31:24]							
Access	RW	RW	RW	RW	RW	RW	RW	RW
Reset	0	0	0	0	0	0	0	0

Bit	23	22	21	20	19	18	17	16
	DIRSET[23:16]							
Access	RW	RW	RW	RW	RW	RW	RW	RW
Reset	0	0	0	0	0	0	0	0

Bit	15	14	13	12	11	10	9	8
	DIRSET[15:8]							
Access	RW	RW	RW	RW	RW	RW	RW	RW
Reset	0	0	0	0	0	0	0	0

Bit	7	6	5	4	3	2	1	0
	DIRSET[7:0]							
Access	RW	RW	RW	RW	RW	RW	RW	RW
Reset	0	0	0	0	0	0	0	0

Bits 31:0 – DIRSET[31:0] Port Data Direction Set
Writing '0' to a bit has no effect.
Writing '1' to a bit will set the corresponding bit in the DIR register, which configures the I/O pin as an output.

Value	Description
0	The corresponding I/O pin in the PORT group will keep its configuration.
1	The corresponding I/O pin in the PORT group is configured as an output.

Downloaded from Arrow.com.

23.8.4 Data Direction Toggle

Name: DIRTGL
Offset: 0x0C
Reset: 0x00000000
Property: PAC Write-Protection

This register allows the user to toggle the direction of one or more I/O pins, without doing a read-modify-write operation. Changes in this register will also be reflected in the Data Direction (DIR), Data Direction Set (DIRSET) and Data Direction Clear (DIRCLR) registers.

Tip: The I/O pins are assembled in pin groups (”PORT groups”) with up to 32 pins. Group 0 consists of the PA pins, group 1 is for the PB pins, etc. Each pin group has its own PORT registers, with a 0x80 address spacing. For example, the register address offset for the Data Direction (DIR) register for group 0 (PA00 to PA31) is 0x00, and the register address offset for the DIR register for group 1 (PB00 to PB31) is 0x80.

Bit	31	30	29	28	27	26	25	24
	DIRTGL[31:24]							
Access	RW	RW	RW	RW	RW	RW	RW	RW
Reset	0	0	0	0	0	0	0	0

Bit	23	22	21	20	19	18	17	16
	DIRTGL[23:16]							
Access	RW	RW	RW	RW	RW	RW	RW	RW
Reset	0	0	0	0	0	0	0	0

Bit	15	14	13	12	11	10	9	8
	DIRTGL[15:8]							
Access	RW	RW	RW	RW	RW	RW	RW	RW
Reset	0	0	0	0	0	0	0	0

Bit	7	6	5	4	3	2	1	0
	DIRTGL[7:0]							
Access	RW	RW	RW	RW	RW	RW	RW	RW
Reset	0	0	0	0	0	0	0	0

Bits 31:0 – DIRTGL[31:0] Port Data Direction Toggle
Writing '0' to a bit has no effect.
Writing '1' to a bit will toggle the corresponding bit in the DIR register, which reverses the direction of the I/O pin.

Value	Description
0	The corresponding I/O pin in the PORT group will keep its configuration.
1	The direction of the corresponding I/O pin is toggled.

Downloaded from Arrow.com.

23.8.5 Data Output Value

Name: OUT
Offset: 0x10
Reset: 0x00000000
Property: PAC Write-Protection

This register sets the data output drive value for the individual I/O pins in the PORT.

This register can be manipulated without doing a read-modify-write operation by using the Data Output Value Clear (OUTCLR), Data Output Value Set (OUTSET), and Data Output Value Toggle (OUTTGL) registers.



Tip: The I/O pins are assembled in pin groups (”PORT groups”) with up to 32 pins. Group 0 consists of the PA pins, group 1 is for the PB pins, etc. Each pin group has its own PORT registers, with a 0x80 address spacing. For example, the register address offset for the Data Direction (DIR) register for group 0 (PA00 to PA31) is 0x00, and the register address offset for the DIR register for group 1 (PB00 to PB31) is 0x80.

Bit	31	30	29	28	27	26	25	24
	OUT[31:24]							
Access	RW	RW	RW	RW	RW	RW	RW	RW
Reset	0	0	0	0	0	0	0	0

Bit	23	22	21	20	19	18	17	16
	OUT[23:16]							
Access	RW	RW	RW	RW	RW	RW	RW	RW
Reset	0	0	0	0	0	0	0	0

Bit	15	14	13	12	11	10	9	8
	OUT[15:8]							
Access	RW	RW	RW	RW	RW	RW	RW	RW
Reset	0	0	0	0	0	0	0	0

Bit	7	6	5	4	3	2	1	0
	OUT[7:0]							
Access	RW	RW	RW	RW	RW	RW	RW	RW
Reset	0	0	0	0	0	0	0	0

Bits 31:0 – OUT[31:0] PORT Data Output Value
For pins configured as outputs via the Data Direction register (DIR), these bits set the logical output drive level.
For pins configured as inputs via the Data Direction register (DIR) and with pull enabled via the Pull Enable bit in the Pin Configuration register (PINCFG.PULLEN), these bits will set the input pull direction.

Value	Description
0	The I/O pin output is driven low, or the input is connected to an internal pull-down.
1	The I/O pin output is driven high, or the input is connected to an internal pull-up.

Downloaded from Arrow.com.

23.8.6 Data Output Value Clear

Name: OUTCLR
Offset: 0x14
Reset: 0x00000000
Property: PAC Write-Protection

This register allows the user to set one or more output I/O pin drive levels low, without doing a read-modify-write operation. Changes in this register will also be reflected in the Data Output Value (OUT), Data Output Value Toggle (OUTTGL) and Data Output Value Set (OUTSET) registers.

Tip: The I/O pins are assembled in pin groups (”PORT groups”) with up to 32 pins. Group 0 consists of the PA pins, group 1 is for the PB pins, etc. Each pin group has its own PORT registers, with a 0x80 address spacing. For example, the register address offset for the Data Direction (DIR) register for group 0 (PA00 to PA31) is 0x00, and the register address offset for the DIR register for group 1 (PB00 to PB31) is 0x80.

Bit	31	30	29	28	27	26	25	24
	OUTCLR[31:24]							
Access	RW	RW	RW	RW	RW	RW	RW	RW
Reset	0	0	0	0	0	0	0	0

Bit	23	22	21	20	19	18	17	16
	OUTCLR[23:16]							
Access	RW	RW	RW	RW	RW	RW	RW	RW
Reset	0	0	0	0	0	0	0	0

Bit	15	14	13	12	11	10	9	8
	OUTCLR[15:8]							
Access	RW	RW	RW	RW	RW	RW	RW	RW
Reset	0	0	0	0	0	0	0	0

Bit	7	6	5	4	3	2	1	0
	OUTCLR[7:0]							
Access	RW	RW	RW	RW	RW	RW	RW	RW
Reset	0	0	0	0	0	0	0	0

Bits 31:0 – OUTCLR[31:0] PORT Data Output Value Clear
Writing '0' to a bit has no effect.
Writing '1' to a bit will clear the corresponding bit in the OUT register. Pins configured as outputs via the Data Direction register (DIR) will be set to low output drive level. Pins configured as inputs via DIR and with pull enabled via the Pull Enable bit in the Pin Configuration register (PINCFG.PULLEN) will set the input pull direction to an internal pull-down.

Value	Description
0	The corresponding I/O pin in the PORT group will keep its configuration.
1	The corresponding I/O pin output is driven low, or the input is connected to an internal pull-down.

Downloaded from Arrow.com.

23.8.7 Data Output Value Set

Name: OUTSET
Offset: 0x18
Reset: 0x00000000
Property: PAC Write-Protection

This register allows the user to set one or more output I/O pin drive levels high, without doing a read-modify-write operation. Changes in this register will also be reflected in the Data Output Value (OUT), Data Output Value Toggle (OUTTGL) and Data Output Value Clear (OUTCLR) registers.



Tip: The I/O pins are assembled in pin groups (”PORT groups”) with up to 32 pins. Group 0 consists of the PA pins, group 1 is for the PB pins, etc. Each pin group has its own PORT registers, with a 0x80 address spacing. For example, the register address offset for the Data Direction (DIR) register for group 0 (PA00 to PA31) is 0x00, and the register address offset for the DIR register for group 1 (PB00 to PB31) is 0x80.

Bit	31	30	29	28	27	26	25	24
	OUTSET[31:24]							
Access	RW	RW	RW	RW	RW	RW	RW	RW
Reset	0	0	0	0	0	0	0	0

Bit	23	22	21	20	19	18	17	16
	OUTSET[23:16]							
Access	RW	RW	RW	RW	RW	RW	RW	RW
Reset	0	0	0	0	0	0	0	0

Bit	15	14	13	12	11	10	9	8
	OUTSET[15:8]							
Access	RW	RW	RW	RW	RW	RW	RW	RW
Reset	0	0	0	0	0	0	0	0

Bit	7	6	5	4	3	2	1	0
	OUTSET[7:0]							
Access	RW	RW	RW	RW	RW	RW	RW	RW
Reset	0	0	0	0	0	0	0	0

Bits 31:0 – OUTSET[31:0] PORT Data Output Value Set
Writing '0' to a bit has no effect.
Writing '1' to a bit will set the corresponding bit in the OUT register, which sets the output drive level high for I/O pins configured as outputs via the Data Direction register (DIR). For pins configured as inputs via Data Direction register (DIR) with pull enabled via the Pull Enable register (PULLEN), these bits will set the input pull direction to an internal pull-up.

Value	Description
0	The corresponding I/O pin in the group will keep its configuration.
1	The corresponding I/O pin output is driven high, or the input is connected to an internal pull-up.

Downloaded from Arrow.com.

23.8.8 Data Output Value Toggle

Name: OUTTGL
Offset: 0x1C
Reset: 0x00000000
Property: PAC Write-Protection

This register allows the user to toggle the drive level of one or more output I/O pins, without doing a read-modify-write operation. Changes in this register will also be reflected in the Data Output Value (OUT), Data Output Value Set (OUTSET) and Data Output Value Clear (OUTCLR) registers.



Tip: The I/O pins are assembled in pin groups (”PORT groups”) with up to 32 pins. Group 0 consists of the PA pins, group 1 is for the PB pins, etc. Each pin group has its own PORT registers, with a 0x80 address spacing. For example, the register address offset for the Data Direction (DIR) register for group 0 (PA00 to PA31) is 0x00, and the register address offset for the DIR register for group 1 (PB00 to PB31) is 0x80.

Bit	31	30	29	28	27	26	25	24
	OUTTGL[31:24]							
Access	RW	RW	RW	RW	RW	RW	RW	RW
Reset	0	0	0	0	0	0	0	0

Bit	23	22	21	20	19	18	17	16
	OUTTGL[23:16]							
Access	RW	RW	RW	RW	RW	RW	RW	RW
Reset	0	0	0	0	0	0	0	0

Bit	15	14	13	12	11	10	9	8
	OUTTGL[15:8]							
Access	RW	RW	RW	RW	RW	RW	RW	RW
Reset	0	0	0	0	0	0	0	0

Bit	7	6	5	4	3	2	1	0
	OUTTGL[7:0]							
Access	RW	RW	RW	RW	RW	RW	RW	RW
Reset	0	0	0	0	0	0	0	0

Bits 31:0 – OUTTGL[31:0] PORT Data Output Value Toggle
Writing '0' to a bit has no effect.
Writing '1' to a bit will toggle the corresponding bit in the OUT register, which inverts the output drive level for I/O pins configured as outputs via the Data Direction register (DIR). For pins configured as inputs via Data Direction register (DIR) with pull enabled via the Pull Enable register (PULLEN), these bits will toggle the input pull direction.

Value	Description
0	The corresponding I/O pin in the PORT group will keep its configuration.
1	The corresponding OUT bit value is toggled.

Downloaded from Arrow.com.

23.8.9 Data Input Value

Name: IN
Offset: 0x20
Reset: 0x00000000
Property: -

Tip: The I/O pins are assembled in pin groups (”PORT groups”) with up to 32 pins. Group 0 consists of the PA pins, group 1 is for the PB pins, etc. Each pin group has its own PORT registers, with a 0x80 address spacing. For example, the register address offset for the Data Direction (DIR) register for group 0 (PA00 to PA31) is 0x00, and the register address offset for the DIR register for group 1 (PB00 to PB31) is 0x80.

Bit	31	30	29	28	27	26	25	24
	IN[31:24]							
Access	R	R	R	R	R	R	R	R
Reset	0	0	0	0	0	0	0	0

Bit	23	22	21	20	19	18	17	16
	IN[23:16]							
Access	R	R	R	R	R	R	R	R
Reset	0	0	0	0	0	0	0	0

Bit	15	14	13	12	11	10	9	8
	IN[15:8]							
Access	R	R	R	R	R	R	R	R
Reset	0	0	0	0	0	0	0	0

Bit	7	6	5	4	3	2	1	0
	IN[7:0]							
Access	R	R	R	R	R	R	R	R
Reset	0	0	0	0	0	0	0	0

Bits 31:0 – IN[31:0] PORT Data Input Value
These bits are cleared when the corresponding I/O pin input sampler detects a logical low level on the input pin.
These bits are set when the corresponding I/O pin input sampler detects a logical high level on the input pin.

Downloaded from Arrow.com.

23.8.10 Control

Name: CTRL
Offset: 0x24
Reset: 0x00000000
Property: PAC Write-Protection

Tip: The I/O pins are assembled in pin groups (”PORT groups”) with up to 32 pins. Group 0 consists of the PA pins, group 1 is for the PB pins, etc. Each pin group has its own PORT registers, with a 0x80 address spacing. For example, the register address offset for the Data Direction (DIR) register for group 0 (PA00 to PA31) is 0x00, and the register address offset for the DIR register for group 1 (PB00 to PB31) is 0x80.

Bit	31	30	29	28	27	26	25	24
	SAMPLING[31:24]							
Access	RW	RW	RW	RW	RW	RW	RW	RW
Reset	0	0	0	0	0	0	0	0

Bit	23	22	21	20	19	18	17	16
	SAMPLING[23:16]							
Access	RW	RW	RW	RW	RW	RW	RW	RW
Reset	0	0	0	0	0	0	0	0

Bit	15	14	13	12	11	10	9	8
	SAMPLING[15:8]							
Access	RW	RW	RW	RW	RW	RW	RW	RW
Reset	0	0	0	0	0	0	0	0

Bit	7	6	5	4	3	2	1	0
	SAMPLING[7:0]							
Access	RW	RW	RW	RW	RW	RW	RW	RW
Reset	0	0	0	0	0	0	0	0

Bits 31:0 – SAMPLING[31:0] Input Sampling Mode
Configures the input sampling functionality of the I/O pin input samplers, for pins configured as inputs via the Data Direction register (DIR).
The input samplers are enabled and disabled in sub-groups of eight. Thus if any pins within a byte request continuous sampling, all pins in that eight pin sub-group will be continuously sampled.

Value	Description
0	On demand sampling of I/O pin is enabled.
1	Continuous sampling of I/O pin is enabled.

Downloaded from Arrow.com.

23.8.11 Write Configuration

Name: WRCONFIG
Offset: 0x28
Reset: 0x00000000
Property: PAC Write-Protection, Write-Only

Tip: The I/O pins are assembled in pin groups (”PORT groups”) with up to 32 pins. Group 0 consists of the PA pins, group 1 is for the PB pins, etc. Each pin group has its own PORT registers, with a 0x80 address spacing. For example, the register address offset for the Data Direction (DIR) register for group 0 (PA00 to PA31) is 0x00, and the register address offset for the DIR register for group 1 (PB00 to PB31) is 0x80.

This Write-only register is used to configure several pins simultaneously with the same configuration and peripheral multiplexing.

To avoid side effect of non-atomic access, 8-bit or 16-bit writes to this register will have no effect. Reading this register always returns zero.

Bit	31	30	29	28	27	26	25	24
	HWSEL	WRPINCFG		WRPMUX	PMUX[3:0]			
Access	W	W		W	W	W	W	W
Reset	0	0		0	0	0	0	0

Bit	23	22	21	20	19	18	17	16
		DRVSTR				PULLEN	INEN	PMUXEN
Access		W				W	W	W
Reset		0				0	0	0

Bit	15	14	13	12	11	10	9	8
	PINMASK[15:8]							
Access	W	W	W	W	W	W	W	W
Reset	0	0	0	0	0	0	0	0

Bit	7	6	5	4	3	2	1	0
	PINMASK[7:0]							
Access	W	W	W	W	W	W	W	W
Reset	0	0	0	0	0	0	0	0

Bit 31 – HWSEL Half-Word Select
This bit selects the half-word field of a 32-PORT group to be reconfigured in the atomic write operation.
This bit will always read as zero.

Value	Description
0	The lower 16 pins of the PORT group will be configured.
1	The upper 16 pins of the PORT group will be configured.

Bit 30 – WRPINCFG Write PINCFG
This bit determines whether the atomic write operation will update the Pin Configuration register (PINCFGy) or not for all pins selected by the WRCONFIG.PINMASK and WRCONFIG.HWSEL bits.
Writing '0' to this bit has no effect.
Writing '1' to this bit updates the configuration of the selected pins with the written WRCONFIG.DRVSTR, WRCONFIG.PULLEN, WRCONFIG.INEN, WRCONFIG.PMUXEN, and WRCONFIG.PINMASK values.
This bit will always read as zero.

Value	Description
0	The PINCFGy registers of the selected pins will not be updated.
1	The PINCFGy registers of the selected pins will be updated.

Downloaded from Arrow.com.

Bit 28 – WRPMUX Write PMUX
This bit determines whether the atomic write operation will update the Peripheral Multiplexing register (PMUXn) or not for all pins selected by the WRCONFIG.PINMASK and WRCONFIG.HWSEL bits.
Writing '0' to this bit has no effect.
Writing '1' to this bit updates the pin multiplexer configuration of the selected pins with the written WRCONFIG. PMUX value.
This bit will always read as zero.

Value	Description
0	The PMUXn registers of the selected pins will not be updated.
1	The PMUXn registers of the selected pins will be updated.

Bits 27:24 – PMUX[3:0] Peripheral Multiplexing
These bits determine the new value written to the Peripheral Multiplexing register (PMUXn) for all pins selected by the WRCONFIG.PINMASK and WRCONFIG.HWSEL bits, when the WRCONFIG.WRPMUX bit is set.
These bits will always read as zero.

Bit 22 – DRVSTR Output Driver Strength Selection
This bit determines the new value written to PINCFGy.DRVSTR for all pins selected by the WRCONFIG.PINMASK and WRCONFIG.HWSEL bits, when the WRCONFIG.WRPINCFG bit is set.
This bit will always read as zero.

Bit 18 – PULLEN Pull Enable
This bit determines the new value written to PINCFGy.PULLEN for all pins selected by the WRCONFIG.PINMASK and WRCONFIG.HWSEL bits, when the WRCONFIG.WRPINCFG bit is set.
This bit will always read as zero.

Bit 17 – INEN Input Enable
This bit determines the new value written to PINCFGy.INEN for all pins selected by the WRCONFIG.PINMASK and WRCONFIG.HWSEL bits, when the WRCONFIG.WRPINCFG bit is set.
This bit will always read as zero.

Bit 16 – PMUXEN Peripheral Multiplexer Enable
This bit determines the new value written to PINCFGy.PMUXEN for all pins selected by the WRCONFIG.PINMASK and WRCONFIG.HWSEL bits, when the WRCONFIG.WRPINCFG bit is set.
This bit will always read as zero.

Bits 15:0 – PINMASK[15:0] Pin Mask for Multiple Pin Configuration
These bits select the pins to be configured within the half-word group selected by the WRCONFIG.HWSEL bit.
These bits will always read as zero.

Value	Description
0	The configuration of the corresponding I/O pin in the half-word group will be left unchanged.
1	The configuration of the corresponding I/O pin in the half-word PORT group will be updated.

Downloaded from Arrow.com.

23.8.12 Peripheral Multiplexing n

Name: PMUX
Offset: 0x30 + n*0x01 [n=0..15]
Reset: 0x00
Property: PAC Write-Protection

Tip: The I/O pins are assembled in pin groups (”PORT groups”) with up to 32 pins. Group 0 consists of the PA pins, group 1 is for the PB pins, etc. Each pin group has its own PORT registers, with a 0x80 address spacing. For example, the register address offset for the Data Direction (DIR) register for group 0 (PA00 to PA31) is 0x00, and the register address offset for the DIR register for group 1 (PB00 to PB31) is 0x80.

There are up to 16 Peripheral Multiplexing registers in each group, one for every set of two subsequent I/O lines. The n denotes the number of the set of I/O lines.

Bit	7	6	5	4	3	2	1	0
	PMUXO[3:0]				PMUXE[3:0]			
Access	RW	RW	RW	RW	RW	RW	RW	RW
Reset	0	0	0	0	0	0	0	0

Bits 7:4 – PMUXO[3:0] Peripheral Multiplexing for Odd-Numbered Pin
These bits select the peripheral function for odd-numbered pins (2*n + 1) of a PORT group, if the corresponding PINCFGy.PMUXEN bit is '1'.
Not all possible values for this selection may be valid. For more details, refer to the *I/O Multiplexing and Considerations*.

PMUXO[3:0]	Name	Description
0x0	A	Peripheral function A selected
0x1	B	Peripheral function B selected
0x2	C	Peripheral function C selected
0x3	D	Peripheral function D selected
0x4	E	Peripheral function E selected
0x5	F	Peripheral function F selected
0x6	G	Peripheral function G selected
0x7	H	Peripheral function H selected
0x8	I	Peripheral function I selected
0x9-0xF	-	Reserved

Bits 3:0 – PMUXE[3:0] Peripheral Multiplexing for Even-Numbered Pin
These bits select the peripheral function for even-numbered pins (2*n) of a PORT group, if the corresponding PINCFGy.PMUXEN bit is '1'.
Not all possible values for this selection may be valid. For more details, refer to the *I/O Multiplexing and Considerations*.

PMUXE[3:0]	Name	Description
0x0	A	Peripheral function A selected
0x1	B	Peripheral function B selected
0x2	C	Peripheral function C selected
0x3	D	Peripheral function D selected
0x4	E	Peripheral function E selected
0x5	F	Peripheral function F selected
0x6	G	Peripheral function G selected
0x7	H	Peripheral function H selected
0x8	I	Peripheral function I selected

Downloaded from Arrow.com.

.....continued		
PMUXE[3:0]	Name	Description
0x9-0xF	-	Reserved

Related Links

7. I/O Multiplexing and Considerations

Downloaded from Arrow.com.

23.8.13 Pin Configuration

Name: PINCFG
Offset: 0x40 + n*0x01 [n=0..31]
Reset: 0x00
Property: PAC Write-Protection

Tip: The I/O pins are assembled in pin groups (”PORT groups”) with up to 32 pins. Group 0 consists of the PA pins, group 1 is for the PB pins, etc. Each pin group has its own PORT registers, with a 0x80 address spacing. For example, the register address offset for the Data Direction (DIR) register for group 0 (PA00 to PA31) is 0x00, and the register address offset for the DIR register for group 1 (PB00 to PB31) is 0x80.

There are up to 32 Pin Configuration registers in each PORT group, one for each I/O line.

Bit	7	6	5	4	3	2	1	0
		DRVSTR				PULLEN	INEN	PMUXEN
Access		RW				RW	RW	RW
Reset		0				0	0	0

Bit 6 – DRVSTR Output Driver Strength Selection
This bit controls the output driver strength of an I/O pin configured as an output.

Value	Description
0	Pin drive strength is set to normal drive strength.
1	Pin drive strength is set to stronger drive strength.

Bit 2 – PULLEN Pull Enable
This bit enables the internal pull-up or pull-down resistor of an I/O pin configured as an input.

Value	Description
0	Internal pull resistor is disabled, and the input is in a high-impedance configuration.
1	Internal pull resistor is enabled, and the input is driven to a defined logic level in the absence of external input.

Bit 1 – INEN Input Enable
This bit controls the input buffer of an I/O pin configured as either an input or output.
Writing a zero to this bit disables the input buffer completely, preventing read-back of the Physical Pin state when the pin is configured as either an input or output.

Value	Description
0	Input buffer for the I/O pin is disabled, and the input value will not be sampled.
1	Input buffer for the I/O pin is enabled, and the input value will be sampled when required.

Bit 0 – PMUXEN Peripheral Multiplexer Enable
This bit enables or disables the peripheral multiplexer selection set in the Peripheral Multiplexing register (PMUXn) to enable or disable alternative peripheral control over an I/O pin direction and output drive value.
Writing a zero to this bit allows the PORT to control the pad direction via the Data Direction register (DIR) and output drive value via the Data Output Value register (OUT). The peripheral multiplexer value in PMUXn is ignored. Writing '1' to this bit enables the peripheral selection in PMUXn to control the pad. In this configuration, the Physical Pin state may still be read from the Data Input Value register (IN) if PINCFGn.INEN is set.

Value	Description
0	The peripheral multiplexer selection is disabled, and the PORT registers control the direction and output drive value.
1	The peripheral multiplexer selection is enabled, and the selected peripheral function controls the direction and output drive value.

Downloaded from Arrow.com.

24. EVSYS – Event System

24.1 Overview

The Event System (EVSYS) allows autonomous, low-latency and configurable communication between peripherals.

Several peripherals can be configured to generate and/or respond to signals known as events. The exact condition to generate an event, or the action taken upon receiving an event, is specific to each peripheral. Peripherals that respond to events are called event users. Peripherals that generate events are called event generators. A peripheral can have one or more event generators and can have one or more event users.

Communication is made without CPU intervention and without consuming system resources such as bus or RAM bandwidth. This reduces the load on the CPU and other system resources, compared to a traditional interrupt-based system.

24.2 Features

- 12 configurable event channels:
  - Can be connected to any event generator
  - Can provide a pure asynchronous, resynchronized, or synchronous path
- 74 Event Generators
- 29 Event Users
- Configurable Edge Detector
- Peripherals can be Event Generators, Event Users, or both
- SleepWalking and interrupt for operation in sleep modes
- Software Event Generation
- Each Event User can choose which channel to respond to, and several Event Users can share the same channel and therefore answer to the same event

24.3 Block Diagram

Figure 24-1. Event System Block Diagram

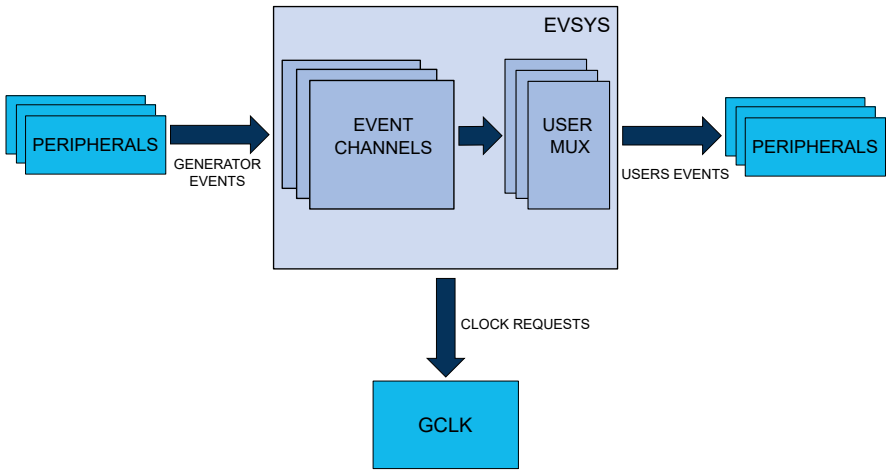

24.4 Signal Description

Not applicable.

Downloaded from Arrow.com.

24.5 Product Dependencies

In order to use this peripheral, other parts of the system must be configured correctly, as described below.

24.5.1 I/O Lines

Not applicable.

24.5.2 Power Management

The EVSYS can be used to wake up the CPU from all sleep modes, even if the clock used by the EVSYS channel and the EVSYS bus clock are disabled. Refer to the *PM – Power Manager* for details on the different sleep modes.

In all sleep modes, although the clock for the EVSYS is stopped, the device still can wake up the EVSYS clock. Some event generators can generate an event when their clocks are stopped.

Related Links

16. PM – Power Manager

24.5.3 Clocks

The EVSYS bus clock (CLK_EVSYS_APB) can be enabled and disabled in the Main Clock module, and the default state of CLK_EVSYS_APB can be found in *Peripheral Clock Masking*.

Each EVSYS channel has a dedicated generic clock (GCLK_EVSYS_CHANNEL_n). These are used for event detection and propagation for each channel. These clocks must be configured and enabled in the generic clock controller before using the EVSYS. Refer to *GCLK - Generic Clock Controller* for details.

Related Links

16.6.2.6 Peripheral Clock Masking

15. GCLK - Generic Clock Controller

24.5.4 DMA

Not applicable.

24.5.5 Interrupts

The interrupt request line is connected to the Interrupt Controller. Using the EVSYS interrupts requires the interrupt controller to be configured first. Refer to *Nested Vector Interrupt Controller* for details.

Related Links

11.2 Nested Vector Interrupt Controller

24.5.6 Events

Not applicable.

24.5.7 Debug Operation

When the CPU is halted in Debug mode, this peripheral will continue normal operation. If the peripheral is configured to require periodical service by the CPU through interrupts or similar, improper operation or data loss may result during debugging. This peripheral can be forced to halt operation during debugging.

24.5.8 Register Access Protection

Registers with write-access can be optionally write-protected by the Peripheral Access Controller (PAC), except for the following:

- Interrupt Flag Status and Clear register (INTFLAG)

Note: Optional write-protection is indicated by the "PAC Write-Protection" property in the register description.

Write-protection does not apply for accesses through an external debugger.

24.5.9 Analog Connections

Not applicable.

Downloaded from Arrow.com.

24.6 Functional Description

24.6.1 Principle of Operation

The Event System consists of several channels which route the internal events from peripherals (generators) to other internal peripherals or IO pins (users). Each event generator can be selected as source for multiple channels, but a channel cannot be set to use multiple event generators at the same time.

24.6.2 Basic Operation

24.6.2.1 Initialization

Before enabling events routing within the system, the User Multiplexer (USER) and Channel (CHANNEL) register must be configured. The User Multiplexer (USER) must be configured first.

Configure the User Multiplexer (USER) register:

1. The channel to be connected to a user is written to the Channel bit group (USER.CHANNEL)
2. The user to connect the channel is written to the User bit group (USER.USER)

Configure the Channel (CHANNEL) register:

1. The channel to be configured is written to the Channel Selection bit group (CHANNEL.CHANNEL)
2. The path to be used is written to the Path Selection bit group (CHANNEL.PATH)
3. The type of edge detection to use on the channel is written to the Edge Selection bit group (CHANNEL.EDGSEL)
4. The event generator to be used is written to the Event Generator bit group (CHANNEL.EVGEN)

24.6.2.2 Enabling, Disabling and Resetting

The EVSYS is always enabled.

The EVSYS is reset by writing a ‘1’ to the Software Reset bit in the Control register (CTRL.SWRST). All registers in the EVSYS will be reset to their initial state and all ongoing events will be canceled. Refer to CTRL.SWRST register for details.

24.6.2.3 User Multiplexer Setup

The user multiplexer defines the channel to be connected to which event user. Each user multiplexer is dedicated to one event user. A user multiplexer receives all event channels output and must be configured to select one of these channels, as shown in the next figure. The channel is selected with the Channel bit group in the USER register (USER.CHANNEL). The user multiplexer must always be configured before the channel. A full list of selectable users can be found in the User Multiplexer register (USER) description. Refer to UserList for details.

To configure a user multiplexer, the USER register must be written in a single 16-bit write. It is possible to read out the configuration of a user by first selecting the user by writing to USER.USER using an 8-bit write and then performing a read of the 16-bit USER register.

Downloaded from Arrow.com.

Figure 24-2. User MUX

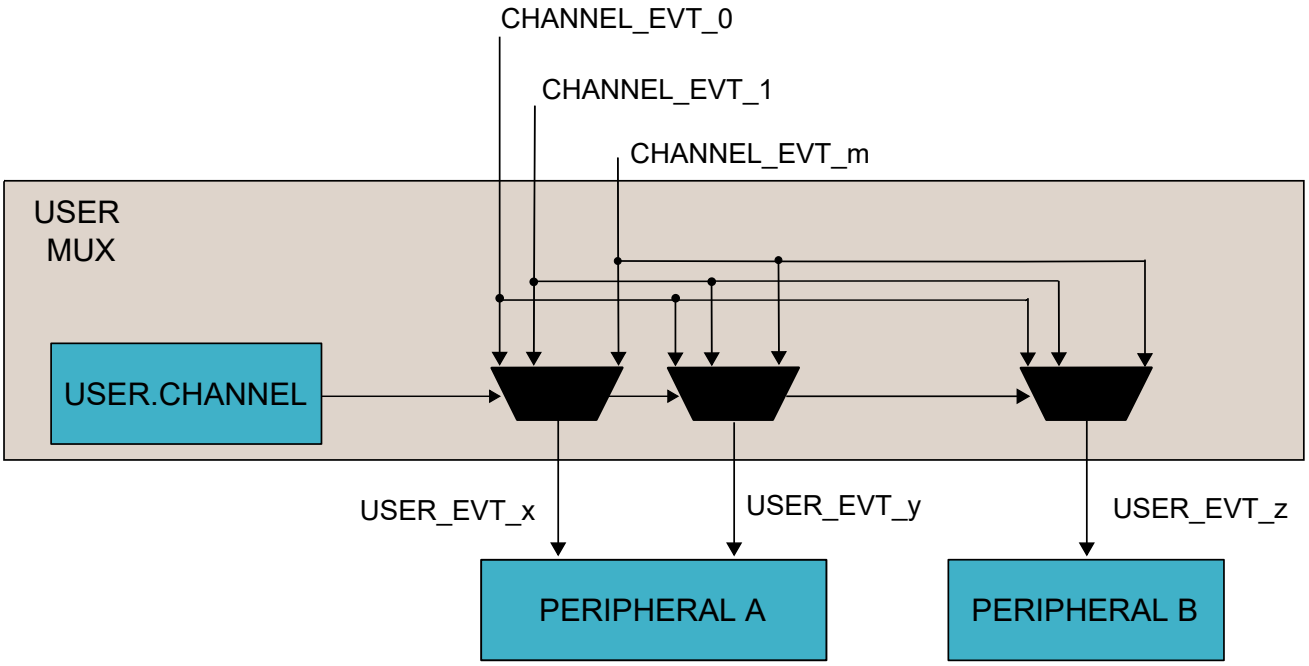

24.6.2.4 Channel Setup

An event channel can select one event from a list of event generators. Depending on configuration, the selected event could be synchronized, resynchronized or asynchronously sent to the users. When synchronization or resynchronization is required, the channel includes an internal edge detector, allowing the Event System to generate internal events when rising, falling or both edges are detected on the selected event generator. An event channel is able to generate internal events for the specific software commands. All these configurations are available in the Channel register (CHANNEL).

To configure a channel, the Channel register must be written in a single 32-bit write. It is possible to read out the configuration of a channel by first selecting the channel by writing to CHANNEL.CHANNEL using a, 8-bit write, and then performing a read of the CHANNEL register.

24.6.2.5 Channel Path

There are three different ways to propagate the event provided by an event generator:

- Asynchronous path
- Synchronous path
- Resynchronized path

Downloaded from Arrow.com.

Figure 24-3. Channel

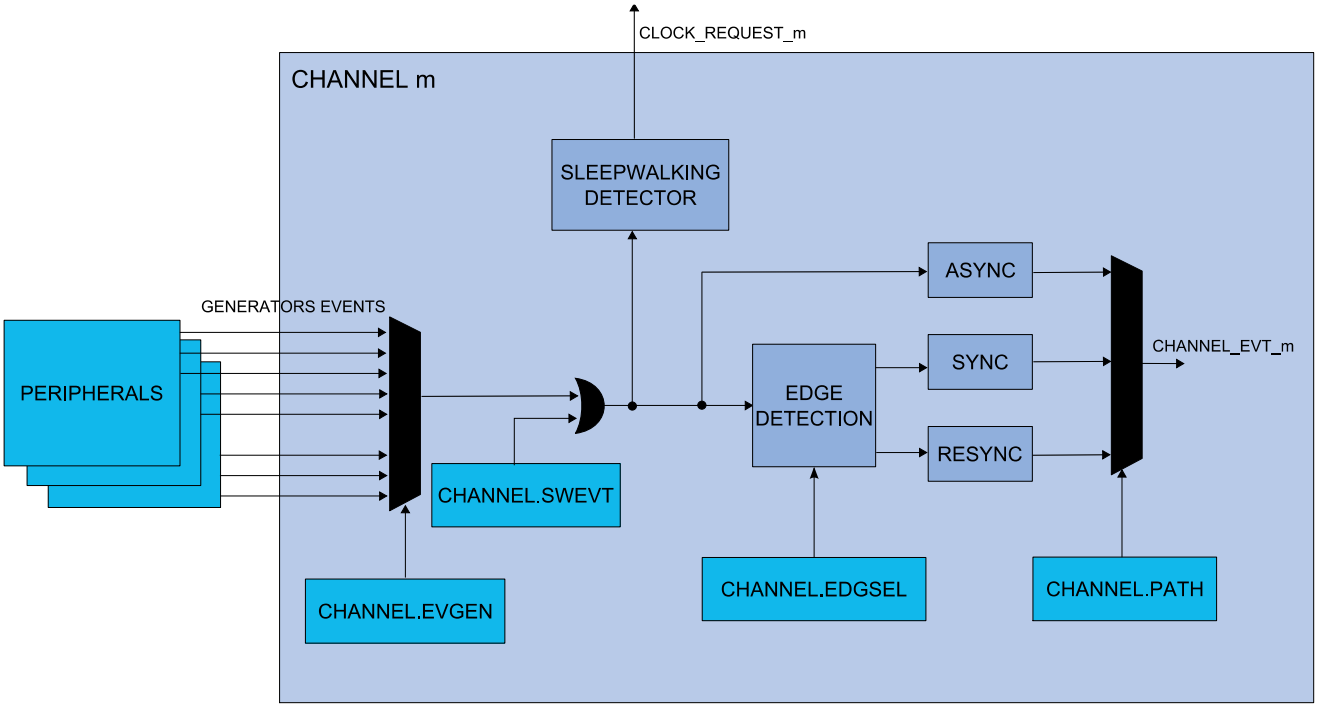

The path is selected by writing to the Path Selection bit group in the Channel register (CHANNEL.PATH).

24.6.2.5.1 Asynchronous Path

When using the asynchronous path, the events are propagated from the event generator to the event user without intervention from the Event System. The GCLK for this channel (GCLK_EVSYS_CHANNEL_n) is not mandatory, meaning that an event will be propagated to the user without any clock latency.

When the asynchronous path is selected, the channel cannot generate any interrupts, and the Channel Status register (CHSTATUS) is always zero. No edge detection is available; this must be handled in the event user. When the event generator and the event user share the same generic clock, using the asynchronous path will propagate the event with the least amount of latency.

24.6.2.5.2 Synchronous Path

The synchronous path should be used when the event generator and the event channel share the same generator for the generic clock and also if event user supports synchronous path. If event user doesn't support synchronous path, asynchronous path has to be selected. If they do not share the same clock, a logic change from the event generator to the event channel might not be detected in the channel, which means that the event will not be propagated to the event user. For details on generic clock generators, refer to *GCLK - Generic Clock Controller*.

When using the synchronous path, the channel is able to generate interrupts. The channel status bits in the Channel Status register (CHSTATUS) are also updated and available for use.

If the Generic Clocks Request bit in the Control register (CTRL.GCLKREQ) is zero, the channel operates in SleepWalking mode and request the configured generic clock only when an event is to be propagated through the channel. If CTRL.GCLKREQ is one, the generic clock will always be on for the configured channel.

Related Links

15. GCLK - Generic Clock Controller

24.6.2.5.3 Resynchronized Path

The resynchronized path should be used when the event generator and the event channel do not share the same generic clock generator. When the resynchronized path is used, resynchronization of the event from the event generator is done in the channel. For details on generic clock generators, refer to *GCLK - Generic Clock Controller*.

When the resynchronized path is used, the channel is able to generate interrupts. The channel status bits in the Channel Status register (CHSTATUS) are also updated and available for use.

Downloaded from Arrow.com.

If the Generic Clocks Request bit in the Control register is zero (CTRL.GCLKREQ=0), the channel operates in SleepWalking mode and requests the configured generic clock only when an event is to be propagated through the channel. If CTRL.GCLKREQ=1 , the generic clock will always be on for the configured channel.

Related Links

15. GCLK - Generic Clock Controller

24.6.2.6 Edge Detection

When synchronous or resynchronized paths are used, edge detection must be used. The event system can perform edge detection in three different ways:

- Generate an event only on the rising edge
- Generate an event only on the falling edge
- Generate an event on rising and falling edges

Edge detection is selected by writing to the Edge Selection bit group in the Channel register (CHANNEL.EDGSEL).

If the generator event is a pulse, both edges cannot be selected. Use the rising edge or falling edge detection methods, depending on the generator event default level.

24.6.2.7 Event Generators

Each event channel can receive the events form all event generators. All event generators are listed in the statement of CHANNEL.EVGEN. For details on event generation, refer to the corresponding module chapter. The channel event generator is selected by the Event Generator bit group in the Channel register (CHANNEL.EVGEN). By default, the channels are not connected to any event generators (ie, CHANNEL.EVGEN = 0)

24.6.2.8 Channel Status

The Channel Status register (CHSTATUS) shows the status of the channels when using a synchronous or resynchronized path. There are two different status bits in CHSTATUS for each of the available channels:

- The CHSTATUS.CHBUSYn bit will be set when an event on the corresponding channel n has not been handled by all event users connected to that channel.
- The CHSTATUS.USRRDYn bit will be set when all event users connected to the corresponding channel are ready to handle incoming events on that channel.

24.6.2.9 Software Event

A software event can be initiated on a channel by setting the Software Event bit in the Channel register (CHANNEL.SWEVT) to ‘1’ at the same time as writing the Channel bits (CHANNEL.CHANNEL). This will generate a software event on the selected channel.

The software event can be used for application debugging, and functions like any event generator. To use the software event, the event path must be configured to either a synchronous path or resynchronized path (CHANNEL.PATH = 0x0 or 0x1), edge detection must be configured to rising-edge detection (CHANNEL.EDGSEL= 0x1) and the Generic Clock Request bit must be set to '1' (CTRL.GCLKREQ=0x1).

24.6.3 Interrupts

The EVSYS has the following interrupt sources:

- Overrun Channel n (OVRn): for details, refer to *The Overrun Channel n Interrupt* section.
- Event Detected Channel n (EVDn): for details, refer to *The Event Detected Channel n Interrupt* section.

These interrupts events are asynchronous wake-up sources. See *Sleep Mode Controller*.

Each interrupt source has an interrupt flag which is in the Interrupt Flag Status and Clear (INTFLAG) register. The flag is set when the interrupt is issued. Each interrupt event can be individually enabled by setting a ‘1’ to the corresponding bit in the Interrupt Enable Set (INTENSET) register, and disabled by setting a ‘1’ to the corresponding bit in the Interrupt Enable Clear (INTENCLR) register. An interrupt event is generated when the interrupt flag is set and the corresponding interrupt is enabled. The interrupt event works until the interrupt flag is cleared, the interrupt is disabled, or the Event System is reset. See INTFLAG for details on how to clear interrupt flags.

All interrupt events from the peripheral are ORed together on system level to generate one combined interrupt request to the NVIC. Refer to the *Nested Vector Interrupt Controller* for details. The event user must read the INTFLAG register to determine what the interrupt condition is.

Downloaded from Arrow.com.

Note that interrupts must be globally enabled for interrupt requests to be generated. Refer to *Nested Vector Interrupt Controller* for details.

Related Links

11.2 Nested Vector Interrupt Controller

16.6.1.3 Sleep Mode Controller

24.6.3.1 The Overrun Channel n Interrupt

The Overrun Channel n interrupt flag in the Interrupt Flag Status and Clear register (CHINTFLAGn.OVR) will be set, and the optional interrupt will be generated in the following cases:

- One or more event users on channel n is not ready when there is a new event.
- An event occurs when the previous event on channel m has not been handled by all event users connected to that channel.

The flag will only be set when using resynchronized paths. In the case of asynchronous path, the CHINTFLAGn.OVR is always read as zero.

Related Links

11.2 Nested Vector Interrupt Controller

24.6.3.2 The Event Detected Channel n Interrupt

The Event Detected Channel n interrupt flag in the Interrupt Flag Status and Clear register (CHINTFLAGn.EVD) is set when an event coming from the event generator configured on channel n is detected.

The flag will only be set when using a resynchronized path. In the case of asynchronous path, the CHINTFLAGn.EVD is always zero.

Related Links

11.2 Nested Vector Interrupt Controller

24.6.4 Sleep Mode Operation

The EVSYS can generate interrupts to wake up the device from any sleep mode.

Some event generators can generate an event when the system clock is stopped. The generic clock (GCLK_EVSYS_CHANNELx) for this channel will be restarted if the channel uses a synchronized path or a resynchronized path, without waking the system from sleep. The clock remains active only as long as necessary to handle the event. After the event has been handled, the clock will be turned off and the system will remain in the original sleep mode. This is known as SleepWalking. When an asynchronous path is used, there is no need for the clock to be activated for the event to be propagated to the user.

On a software reset, all registers are set to their reset values and any ongoing events are canceled.

24.7 Register Summary

Table 24-1. Event System Register Summary

Offset	Name	Bit Pos.								
0x00	CTRL	7:0				GCLKREQ				SWRST
0x01 ... 0x03	Reserved									
0x04	CHANNEL	7:0					CHANNEL[3:0]			
0x05		15:8								SWEVT
0x06		23:16		EVGEN[6:0]						
0x07		31:24					EDGSEL[1:0]		PATH[1:0]	
0x08	USER	7:0				USER[4:0]				
0x09		15:8				CHANNEL[4:0]				
0x0A	Reserved									

Downloaded from Arrow.com.

.....continued

Offset	Name	Bit Pos.								
0x0B	Reserved									
0x0C	CHSTATUS	7:0	USRRDY7	USRRDY6	USRRDY5	USRRDY4	USRRDY3	USRRDY2	USRRDY1	USRRDY0
0x0D		15:8	CHBUSY7	CHBUSY6	CHBUSY5	CHBUSY4	CHBUSY3	CHBUSY2	CHBUSY1	CHBUSY0
0x0E		23:16					USRRDY11	USRRDY10	USRRDY9	USRRDY8
0x0F		31:24					CHBUSY11	CHBUSY10	CHBUSY9	CHBUSY8
0x10	INTENCLR	7:0	OVR7	OVR6	OVR5	OVR4	OVR3	OVR2	OVR1	OVR0
0x11		15:8	EVD7	EVD6	EVD5	EVD4	EVD3	EVD2	EVD1	EVD0
0x12		23:16					OVR11	OVR10	OVR9	OVR8
0x13		31:24					EVD11	EVD10	EVD9	EVD8
0x14	INTENSET	7:0	OVR7	OVR6	OVR5	OVR4	OVR3	OVR2	OVR1	OVR0
0x15		15:8	EVD7	EVD6	EVD5	EVD4	EVD3	EVD2	EVD1	EVD0
0x16		23:16					OVR11	OVR10	OVR9	OVR8
0x17		31:24					EVD11	EVD10	EVD9	EVD8
0x18	INTFLAG	7:0	OVR7	OVR6	OVR5	OVR4	OVR3	OVR2	OVR1	OVR0
0x19		15:8	EVD7	EVD6	EVD5	EVD4	EVD3	EVD2	EVD1	EVD0
0x1A		23:16					OVR11	OVR10	OVR9	OVR8
0x1B		31:24					EVD11	EVD10	EVD9	EVD8

24.8 Register Description

Registers can be 8, 16, or 32 bits wide. Atomic 8-, 16-, and 32-bit accesses are supported. In addition, the 8-bit quarters and 16-bit halves of a 32-bit register, and the 8-bit halves of a 16-bit register can be accessed directly.

Some registers are enable-protected, meaning they can only be written when the module is disabled. Enable-protection is denoted by the "Enable-Protected" property in each individual register description.

Refer to 24.5.8 Register Access Protection.

Downloaded from Arrow.com.

24.8.1 Control

Name: CTRL
Offset: 0x00
Reset: 0x00
Property: Write-Protected

Bit	7	6	5	4	3	2	1	0
				GCLKREQ				SWRST
Access				R/W				W
Reset				0				0

Bit 4 – GCLKREQ Generic Clock Requests
This bit is used to determine whether the generic clocks used for the different channels should be on all the time or only when an event needs the generic clock. Events propagated through asynchronous paths will not need a generic clock.

Value	Description
0	Generic clock is requested and turned on only if an event is detected.
1	Generic clock for a channel is always on.

Bit 0 – SWRST Software Reset
Writing a zero to this bit has no effect.
Writing a one to this bit resets all registers in the EVSYS to their initial state.
Writing a one to CTRL.SWRST will always take precedence, meaning that all other writes in the same write-operation will be discarded.
Note: Before applying a Software Reset it is recommended to disable the event generators.

Downloaded from Arrow.com.

24.8.2 Channel

Name: CHANNEL
Offset: 0x04
Reset: 0x00000000
Property: Write-Protected

Bit	31	30	29	28	27	26	25	24
					EDGSEL[1:0]		PATH[1:0]	
Access					R/W	R/W	R/W	R/W
Reset					0	0	0	0

Bit	23	22	21	20	19	18	17	16
		EVGEN[6:0]						
Access		R/W	R/W	R/W	R/W	R/W	R/W	R/W
Reset		0	0	0	0	0	0	0

Bit	15	14	13	12	11	10	9	8
								SWEVT
Access								R/W
Reset								0

Bit	7	6	5	4	3	2	1	0
					CHANNEL[3:0]			
Access					R/W	R/W	R/W	R/W
Reset					0	0	0	0

Bits 27:26 – EDGSEL[1:0] Edge Detection Selection
These bits set the type of edge detection to be used on the channel.
These bits must be written to zero when using the asynchronous path.

EDGSEL[1:0]	Name	Description
0x0	NO_EVT_OUTPUT	No event output when using the resynchronized or synchronous path
0x1	RISING_EDGE	Event detection only on the rising edge of the signal from the event generator when using the resynchronized or synchronous path
0x2	FALLING_EDGE	Event detection only on the falling edge of the signal from the event generator when using the resynchronized or synchronous path
0x3	BOTH_EDGES	Event detection on rising and falling edges of the signal from the event generator when using the resynchronized or synchronous path

Bits 25:24 – PATH[1:0] Path Selection
These bits are used to choose the path to be used by the selected channel.
The path choice can be limited by the channel source.

PATH[1:0]	Name	Description
0x0	SYNCHRONOUS	Synchronous path
0x1	RESYNCHRONIZED	Resynchronized path
0x2	ASYNCHRONOUS	Asynchronous path
0x3		Reserved

Bits 22:16 – EVGEN[6:0] Event Generator Selection
These bits are used to choose which event generator to connect to the selected channel.

Value	Event Generator	Description
0x00	NONE	No event generator selected
0x01	RTC CMP0	Compare 0 (mode 0 and 1) or Alarm 0 (mode 2)

Downloaded from Arrow.com.

.....continued

Value	Event Generator	Description
0x02	RTC CMP1	Compare 1
0x03	RTC OVF	Overflow
0x04	RTC PER0	Period 0
0x05	RTC PER1	Period 1
0x06	RTC PER2	Period 2
0x07	RTC PER3	Period 3
0x08	RTC PER4	Period 4
0x09	RTC PER5	Period 5
0x0A	RTC PER6	Period 6
0x0B	RTC PER7	Period 7
0x0C	EIC EXTINT0	External Interrupt 0
0x0D	EIC EXTINT1	External Interrupt 1
0x0E	EIC EXTINT2	External Interrupt 2
0x0F	EIC EXTINT3	External Interrupt 3
0x10	EIC EXTINT4	External Interrupt 4
0x11	EIC EXTINT5	External Interrupt 5
0x12	EIC EXTINT6	External Interrupt 6
0x13	EIC EXTINT7	External Interrupt 7
0x14	EIC EXTINT8	External Interrupt 8
0x15	EIC EXTINT9	External Interrupt 9
0x16	EIC EXTINT10	External Interrupt 10
0x17	EIC EXTINT11	External Interrupt 11
0x18	EIC EXTINT12	External Interrupt 12
0x19	EIC EXTINT13	External Interrupt 13
0x1A	EIC EXTINT14	External Interrupt 14
0x1B	EIC EXTINT15	External Interrupt 15
0x1C	Reserved	
0x1D	Reserved	
0x1E	DMAC CH0	Channel 0
0x1F	DMAC CH1	Channel 1
0x20	DMAC CH2	Channel 2
0x21	DMAC CH3	Channel 3
0x22	TCC0 OVF	Overflow
0x23	TCC0 TRG	Trig
0x24	TCC0 CNT	Counter
0x25	TCC0_MCX0	Match/Capture 0
0x26	TCC0_MCX1	Match/Capture 1
0x27	TCC0_MCX2	Match/Capture 2
0x28	TCC0_MCX3	Match/Capture 3
0x29	TCC1 OVF	Overflow
0x2A	TCC1 TRG	Trig
0x2B	TCC1 CNT	Counter
0x2C	TCC1_MCX0	Match/Capture 0
0x2D	TCC1_MCX1	Match/Capture 1
0x2E	TCC2 OVF	Overflow
0x2F	TCC2 TRG	Trig
0x30	TCC2 CNT	Counter
0x31	TCC2_MCX0	Match/Capture 0
0x32	TCC2_MCX1	Match/Capture 1
0x33	TC3 OVF	Overflow/Underflow
0x34	TC3 MC0	Match/Capture 0
0x35	TC3 MC1	Match/Capture 1
0x36	TC4 OVF	Overflow/Underflow

Downloaded from Arrow.com.

.....continued		
Value	**Event Generator**	**Description**
0x37	TC4 MC0	Match/Capture 0
0x38	TC4 MC1	Match/Capture 1
0x39	TC5 OVF	Overflow/Underflow
0x3A	TC5 MC0	Match/Capture 0
0x3B	TC5 MC1	Match/Capture 1
0x3C	TC6 OVF	Overflow/Underflow
0x3D	TC6 MC0	Match/Capture 0
0x3E	TC6 MC1	Match/Capture 1
0x3F	TC7 OVF	Overflow/Underflow
0x40	TC7 MC0	Match/Capture 0
0x41	TC7 MC1	Match/Capture 1
0x42	ADC RESRDY	Result Ready
0x43	ADC WINMON	Window Monitor
0x44	AC COMP0	Comparator 0
0x45	AC COMP1	Comparator 1
0x46	AC WIN0	Window 0
0x47	DAC EMPTY	Data Buffer Empty
0x48	PTC EOC	End of Conversion
0x49	PTC WCOMP	Window Comparator
0x4A	AC COMP2	Comparator 2
0x4B	AC COMP3	Comparator 3
0x4C	AC WIN1	Window 1
0x4D	TCC3 OVF	Overflow
0x4E	TCC3 TRG	Trigger
0x4F	TCC3 CNT	Counter
0x50	TCC3_MCX0	Match/Capture 0
0x51	TCC3_MCX1	Match/Capture 1
0x52	TCC3_MCX2	Match/Capture 2
0x53	TCC3_MCX3	Match/Capture 3
0x54-0x7F	Reserved	Reserved

Bit 8 – SWEVT Software Event
This bit is used to insert a software event on the channel selected by the CHANNEL.CHANNEL bit group.
This bit has the same behavior similar to an event.
This bit must be written together with CHANNEL.CHANNEL using a 16-bit write.
Writing a zero to this bit has no effect.
Writing a one to this bit will trigger a software event for the corresponding channel.
This bit will always return zero when read.

Bits 3:0 – CHANNEL[3:0] Channel Selection
These bits are used to select the channel to be set up or read from.

Downloaded from Arrow.com.

24.8.3 User Multiplexer

Name: USER
Offset: 0x08
Reset: 0x0000
Property: Write-Protected

Bit	15	14	13	12	11	10	9	8
				CHANNEL[4:0]				
Access				R/W	R/W	R/W	R/W	R/W
Reset				0	0	0	0	0

Bit	7	6	5	4	3	2	1	0
	USER[7:0]							
Access	R/W	R/W	R/W	R/W	R/W	R/W	R/W	R/W
Reset	0	0	0	0	0	0	0	0

Bits 12:8 – CHANNEL[4:0] Channel Event Selection
These bits are used to select the channel to connect to the event user.
Note that to select channel n, the value (n+1) must be written to the USER.CHANNEL bit group.

CHANNEL[4:0]	Channel Number
0x0	No Channel Output Selected
0x1-0xC	Channel n-1 selected
0xD-0xFF	Reserved

Bits 7:0 – USER[7:0] User Multiplexer Selection
These bits select the event user to be configured with a channel, or the event user to read the channel value from.

Table 24-2. User Multiplexer Selection

USER[7:0]	User Multiplexer	Description	Path Type
0x00	DMAC CH0	Channel 0	Resynchronized path only
0x01	DMAC CH1	Channel 1	Resynchronized path only
0x02	DMAC CH2	Channel 2	Resynchronized path only
0x03	DMAC CH3	Channel 3	Resynchronized path only
0x04	TCC0 EV0		Asynchronous, synchronous and resynchronized paths
0x05	TCC0 EV1		Asynchronous, synchronous and resynchronized paths
0x06	TCC0 MC0	Match/Capture 0	Asynchronous, synchronous and resynchronized paths
0x07	TCC0 MC1	Match/Capture 1	Asynchronous, synchronous and resynchronized paths
0x08	TCC0 MC2	Match/Capture 2	Asynchronous, synchronous and resynchronized paths
0x09	TCC0 MC3	Match/Capture 3	Asynchronous, synchronous and resynchronized paths
0x0A	TCC1 EV0		Asynchronous, synchronous and resynchronized paths
0x0B	TCC1 EV1		Asynchronous, synchronous and resynchronized paths
0x0C	TCC1 MC0	Match/Capture 0	Asynchronous, synchronous and resynchronized paths
0x0D	TCC1 MC1	Match/Capture 1	Asynchronous, synchronous and resynchronized paths
0x0E	TCC2 EV0		Asynchronous, synchronous and resynchronized paths
0x0F	TCC2 EV1		Asynchronous, synchronous and resynchronized paths
0x10	TCC2 MC0	Match/Capture 0	Asynchronous, synchronous and resynchronized paths
0x11	TCC2 MC1	Match/Capture 1	Asynchronous, synchronous and resynchronized paths
0x12	TC3		Asynchronous, synchronous and resynchronized paths
0x13	TC4		Asynchronous, synchronous and resynchronized paths
0x14	TC5		Asynchronous, synchronous and resynchronized paths
0x15	TC6		Asynchronous, synchronous and resynchronized paths
0x16	TC7		Asynchronous, synchronous and resynchronized paths
0x17	ADC START	ADC start conversion	Asynchronous path only

Downloaded from Arrow.com.

.....continued

USER[7:0]	User Multiplexer	Description	Path Type
0x18	ADC SYNC	Flush ADC	Asynchronous path only
0x19	AC COMP0	Start comparator 0	Asynchronous path only
0x1A	AC COMP1	Start comparator 1	Asynchronous path only
0x1B	DAC START	DAC start conversion	Asynchronous path only
0x1C	PTC STCONV	PTC start conversion	Asynchronous path only
0x1D	AC COMP2	Start Comparator 2	Asynchronous path only
0x1E	AC COMP3	Start Comparator 3	Asynchronous path only
0x1F	TCC3 EV0	Match/Capture 1	Asynchronous, synchronous and resynchronized paths
0x20	TCC3 EV1	Match/Capture 2	Asynchronous, synchronous and resynchronized paths
0x21	TCC3 MC0	Match/Capture 0	Asynchronous, synchronous and resynchronized paths
0x22	TCC3 MC1	Match/Capture 1	Asynchronous, synchronous and resynchronized paths
0x23	TCC3 MC2	Match/Capture 2	Asynchronous, synchronous and resynchronized paths
0x24	TCC3 MC3	Match/Capture 3	Asynchronous, synchronous and resynchronized paths
0x25- 0x3F	Reserved		Reserved

Downloaded from Arrow.com.

24.8.4 Channel Status

Name: CHSTATUS
Offset: 0x0C
Reset: 0x000F00FF
Property: -

Bit	31	30	29	28	27	26	25	24
					CHBUSY11	CHBUSY10	CHBUSY9	CHBUSY8
Access					R	R	R	R
Reset					0	0	0	0

Bit	23	22	21	20	19	18	17	16
					USRRDY11	USRRDY10	USRRDY9	USRRDY8
Access					R	R	R	R
Reset					1	1	1	1

Bit	15	14	13	12	11	10	9	8
	CHBUSY7	CHBUSY6	CHBUSY5	CHBUSY4	CHBUSY3	CHBUSY2	CHBUSY1	CHBUSY0
Access	R	R	R	R	R	R	R	R
Reset	0	0	0	0	0	0	0	0

Bit	7	6	5	4	3	2	1	0
	USRRDY7	USRRDY6	USRRDY5	USRRDY4	USRRDY3	USRRDY2	USRRDY1	USRRDY0
Access	R	R	R	R	R	R	R	R
Reset	1	1	1	1	1	1	1	1

Bits 24, 25, 26, 27 – CHBUSYn Channel n Busy
This bit is cleared when channel n is idle
This bit is set if an event on channel n has not been handled by all event users connected to channel n.

Bits 16, 17, 18, 19 – USRRDYn Channel n User Ready
This bit is cleared when at least one of the event users connected to the channel is not ready.
This bit is set when all event users connected to channel n are ready to handle incoming events on channel n.

Bits 8, 9, 10, 11, 12, 13, 14, 15 – CHBUSYn Channel n Busy
This bit is cleared when channel n is idle
This bit is set if an event on channel n has not been handled by all event users connected to channel n.

Bits 0, 1, 2, 3, 4, 5, 6, 7 – USRRDYn Channel n User Ready
This bit is cleared when at least one of the event users connected to the channel is not ready.
This bit is set when all event users connected to channel n are ready to handle incoming events on channel n.

Downloaded from Arrow.com.

24.8.5 Interrupt Enable Clear

Name: INTENCLR
Offset: 0x10
Reset: 0x00000000
Property: Write-Protected

Bit	31	30	29	28	27	26	25	24
					EVD11	EVD10	EVD9	EVD8
Access					R/W	R/W	R/W	R/W
Reset					0	0	0	0

Bit	23	22	21	20	19	18	17	16
					OVR11	OVR10	OVR9	OVR8
Access					R/W	R/W	R/W	R/W
Reset					0	0	0	0

Bit	15	14	13	12	11	10	9	8
	EVD7	EVD6	EVD5	EVD4	EVD3	EVD2	EVD1	EVD0
Access	R/W	R/W	R/W	R/W	R/W	R/W	R/W	R/W
Reset	0	0	0	0	0	0	0	0

Bit	7	6	5	4	3	2	1	0
	OVR7	OVR6	OVR5	OVR4	OVR3	OVR2	OVR1	OVR0
Access	R/W	R/W	R/W	R/W	R/W	R/W	R/W	R/W
Reset	0	0	0	0	0	0	0	0

Bits 24, 25, 26, 27 – EVDn Channel n Event Detection Interrupt Enable [n=11..8]
Writing a zero to this bit has no effect.
Writing a one to this bit will clear the Event Detected Channel n Interrupt Enable bit, which disables the Event Detected Channel n interrupt.

Value	Description
0	The Event Detected Channel n interrupt is disabled.
1	The Event Detected Channel n interrupt is enabled.

Bits 16, 17, 18, 19 – OVRn Channel n Overrun Interrupt Enable [n=11..8]
Writing a zero to this bit has no effect.
Writing a one to this bit will clear the Overrun Channel n Interrupt Enable bit, which disables the Overrun Channel n interrupt.

Value	Description
0	The Overrun Channel n interrupt is disabled.
1	The Overrun Channel n interrupt is enabled.

Bits 8, 9, 10, 11, 12, 13, 14, 15 – EVDn Channel n Event Detection Interrupt Enable [n=7..0]
Writing a zero to this bit has no effect.
Writing a one to this bit will clear the Event Detected Channel n Interrupt Enable bit, which disables the Event Detected Channel n interrupt.

Value	Description
0	The Event Detected Channel n interrupt is disabled.
1	The Event Detected Channel n interrupt is enabled.

Bits 0, 1, 2, 3, 4, 5, 6, 7 – OVRn Channel n Overrun Interrupt Enable [n=7..0]
Writing a zero to this bit has no effect.
Writing a one to this bit will clear the Overrun Channel n Interrupt Enable bit, which disables the Overrun Channel n interrupt.

Downloaded from Arrow.com.

Value	Description
0	The Overrun Channel n interrupt is disabled.
1	The Overrun Channel n interrupt is enabled.

Downloaded from Arrow.com.

24.8.6 Interrupt Enable Set

Name: INTENSET
Offset: 0x14
Reset: 0x00000000
Property: Write-Protected

Bit	31	30	29	28	27	26	25	24
					EVD11	EVD10	EVD9	EVD8
Access					R/W	R/W	R/W	R/W
Reset					0	0	0	0

Bit	23	22	21	20	19	18	17	16
					OVR11	OVR10	OVR9	OVR8
Access					R/W	R/W	R/W	R/W
Reset					0	0	0	0

Bit	15	14	13	12	11	10	9	8
	EVD7	EVD6	EVD5	EVD4	EVD3	EVD2	EVD1	EVD0
Access	R/W	R/W	R/W	R/W	R/W	R/W	R/W	R/W
Reset	0	0	0	0	0	0	0	0

Bit	7	6	5	4	3	2	1	0
	OVR7	OVR6	OVR5	OVR4	OVR3	OVR2	OVR1	OVR0
Access	R/W	R/W	R/W	R/W	R/W	R/W	R/W	R/W
Reset	0	0	0	0	0	0	0	0

Bits 24, 25, 26, 27 – EVDn Channel n Event Detection Interrupt Enable [n=11..8]
Writing a zero to this bit has no effect.
Writing a one to this bit will set the Event Detected Channel n Interrupt Enable bit, which enables the Event Detected Channel n interrupt.

Value	Description
0	The Event Detected Channel n interrupt is disabled.
1	The Event Detected Channel n interrupt is enabled.

Bits 16, 17, 18, 19 – OVRn Channel n Overrun Interrupt Enable [n=11..8]
Writing a zero to this bit has no effect.
Writing a one to this bit will set the Overrun Channel n Interrupt Enable bit, which enables the Overrun Channel n interrupt.

Value	Description
0	The Overrun Channel n interrupt is disabled.
1	The Overrun Channel n interrupt is enabled.

Bits 8, 9, 10, 11, 12, 13, 14, 15 – EVDn Channel n Event Detection Interrupt Enable [n=7..0]
Writing a zero to this bit has no effect.
Writing a one to this bit will set the Event Detected Channel n Interrupt Enable bit, which enables the Event Detected Channel n interrupt.

Value	Description
0	The Event Detected Channel n interrupt is disabled.
1	The Event Detected Channel n interrupt is enabled.

Bits 0, 1, 2, 3, 4, 5, 6, 7 – OVRn Channel n Overrun Interrupt Enable [n=7..0]
Writing a zero to this bit has no effect.
Writing a one to this bit will set the Overrun Channel n Interrupt Enable bit, which enables the Overrun Channel n interrupt.

Downloaded from Arrow.com.

Value	Description
0	The Overrun Channel n interrupt is disabled.
1	The Overrun Channel n interrupt is enabled.

Downloaded from Arrow.com.

24.8.7 Interrupt Flag Status and Clear

Name: INTFLAG
Offset: 0x18
Reset: 0x00000000
Property: -

Bit	31	30	29	28	27	26	25	24
					EVD11	EVD10	EVD9	EVD8
Access					R/W	R/W	R/W	R/W
Reset					0	0	0	0

Bit	23	22	21	20	19	18	17	16
					OVR11	OVR10	OVR9	OVR8
Access					R/W	R/W	R/W	R/W
Reset					0	0	0	0

Bit	15	14	13	12	11	10	9	8
	EVD7	EVD6	EVD5	EVD4	EVD3	EVD2	EVD1	EVD0
Access	R/W	R/W	R/W	R/W	R/W	R/W	R/W	R/W
Reset	0	0	0	0	0	0	0	0

Bit	7	6	5	4	3	2	1	0
	OVR7	OVR6	OVR5	OVR4	OVR3	OVR2	OVR1	OVR0
Access	R/W	R/W	R/W	R/W	R/W	R/W	R/W	R/W
Reset	0	0	0	0	0	0	0	0

Bits 24, 25, 26, 27 – EVDn Channel n Event Detection [n=11..8]
This flag is set on the next CLK_EVSYS_APB cycle when an event is being propagated through the channel, and an interrupt request will be generated if INTENCLR/SET.EVDn is one.
When the event channel path is asynchronous, the EVDn Interrupt flag will not be set.
Writing a zero to this bit has no effect.
Writing a one to this bit will clear the Event Detected Channel n interrupt flag.

Bits 16, 17, 18, 19 – OVRn Channel n Overrun [n=11..8]
This flag is set on the next CLK_EVSYS cycle after an Overrun Channel condition occurs, and an interrupt request will be generated if INTENCLR/SET.OVRn is one.
When the event channel path is asynchronous, the OVRn Interrupt flag will not be set.
Writing a zero to this bit has no effect.
Writing a one to this bit will clear the Overrun Channel n Interrupt flag.

Bits 8, 9, 10, 11, 12, 13, 14, 15 – EVDn Channel n Event Detection [n=7..0]
This flag is set on the next CLK_EVSYS_APB cycle when an event is being propagated through the channel, and an interrupt request will be generated if INTENCLR/SET.EVDn is one.
When the event channel path is asynchronous, the EVDn Interrupt flag will not be set.
Writing a zero to this bit has no effect.
Writing a one to this bit will clear the Event Detected Channel n interrupt flag.

Bits 0, 1, 2, 3, 4, 5, 6, 7 – OVRn Channel n Overrun [n=7..0]
This flag is set on the next CLK_EVSYS cycle after an Overrun Channel condition occurs, and an interrupt request will be generated if INTENCLR/SET.OVRn is one.
When the event channel path is asynchronous, the OVRn Interrupt flag will not be set.
Writing a zero to this bit has no effect.
Writing a one to this bit will clear the Overrun Channel n Interrupt flag.

Downloaded from Arrow.com.

25. SERCOM – Serial Communication Interface

25.1 Overview

There are up to six instances of the serial communication interface (SERCOM) peripheral.

A SERCOM can be configured to support a number of modes: I^2C, SPI, and USART. When an instance of SERCOM is configured and enabled, all of the resources of that SERCOM instance will be dedicated to the selected mode.

The SERCOM serial engine consists of a transmitter and receiver, baud-rate generator and address matching functionality. It can use the internal generic clock or an external clock. Using an external clock allows the SERCOM to be operated in all Sleep modes.

Related Links

26. SERCOM USART
27. SERCOM SPI – SERCOM Serial Peripheral Interface
28. SERCOM I2C – Inter-Integrated Circuit

25.2 Features

- Interface for Configuring into one of the following (selected by CTRLA.MODE[2:0]):
  - Inter-Integrated Circuit (I^2C) two-wire serial interface
  - System Management Bus (SMBus™) compatible
  - Serial Peripheral Interface (SPI)
  - Universal Synchronous/Asynchronous Receiver/Transmitter (USART)
- Single Transmit Buffer and Double Receive Buffer
- Baud-rate Generator
- Address Match/mask Logic
- Operational in all Sleep modes with an External Clock Source
- Can be used with DMA

See the Related Links for full feature lists of the interface configurations.

Related Links

26. SERCOM USART
27. SERCOM SPI – SERCOM Serial Peripheral Interface
28. SERCOM I2C – Inter-Integrated Circuit

Downloaded from Arrow.com.

25.3 Block Diagram

Figure 25-1. SERCOM Block Diagram

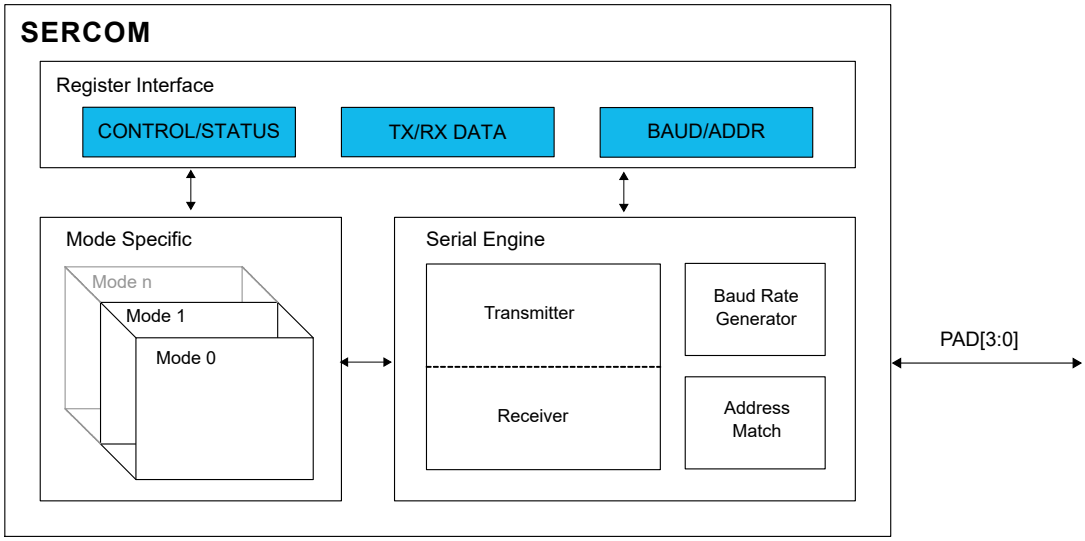

25.4 Signal Description

See the respective SERCOM mode chapters for details.

Related Links

26. SERCOM USART
27. SERCOM SPI – SERCOM Serial Peripheral Interface
28. SERCOM I2C – Inter-Integrated Circuit

25.5 Product Dependencies

In order to use this peripheral, other parts of the system must be configured correctly, as described below.

25.5.1 I/O Lines

Using the SERCOM I/O lines requires the I/O pins to be configured using port configuration (PORT).

The SERCOM has four internal pads, PAD[3:0], and the signals from I2C, SPI and USART are routed through these SERCOM pads via a multiplexer. The configuration of the multiplexer is available from the different SERCOM modes. Refer to the mode specific chapters for details.

Related Links

26. SERCOM USART
27. SERCOM SPI – SERCOM Serial Peripheral Interface
28. SERCOM I2C – Inter-Integrated Circuit
23. PORT - I/O Pin Controller
26.3 Block Diagram

25.5.2 Power Management

The SERCOM can operate in any Sleep mode provided the selected clock source is running. SERCOM interrupts can be configured to wake the device from Sleep modes.

Related Links

16. PM – Power Manager

Downloaded from Arrow.com.

25.5.3 Clocks

The SERCOM bus clock (CLK_SERCOMx_APB) can be enabled and disabled in the Power Manager. Refer to *Peripheral Clock Masking* for details and default status of this clock.

The SERCOM uses two generic clocks: GCLK_SERCOMx_CORE and GCLK_SERCOMx_SLOW. The core clock (GCLK_SERCOMx_CORE) is required to clock the SERCOM while working as a host. The slow clock (GCLK_SERCOMx_SLOW) is only required for certain functions. See specific mode chapters for details.

These clocks must be configured and enabled in the Generic Clock Controller (GCLK) before using the SERCOM.

The generic clocks are asynchronous to the user interface clock (CLK_SERCOMx_APB). Due to this asynchronicity, writing to certain registers will require synchronization between the clock domains. Refer to 25.6.8 Synchronization for details.

Related Links

15. GCLK - Generic Clock Controller

16.6.2.6 Peripheral Clock Masking

25.5.4 DMA

The DMA request lines are connected to the DMA Controller (DMAC). The DMAC must be configured before the SERCOM DMA requests are used.

Related Links

20. DMAC – Direct Memory Access Controller

25.5.5 Interrupts

The interrupt request line is connected to the Interrupt Controller (NVIC). The NVIC must be configured before the SERCOM interrupts are used.

Related Links

11.2 Nested Vector Interrupt Controller

25.5.6 Events

Not applicable.

25.5.7 Debug Operation

When the CPU is halted in debug mode, this peripheral will continue normal operation. If the peripheral is configured to require periodical service by the CPU through interrupts or similar, improper operation or data loss may result during debugging. This peripheral can be forced to halt operation during debugging - refer to the Debug Control (DBGCTRL) register for details.

25.5.8 Register Access Protection

All registers with write-access can be write-protected optionally by the Peripheral Access Controller (PAC), except for the following registers:

- Interrupt Flag Clear and Status register (INTFLAG)
- Status register (STATUS)
- Data register (DATA)
- Address register (ADDR)

Optional write-protection by the Peripheral Access Controller (PAC) is denoted by the "PAC Write-Protection" property in each individual register description.

PAC write-protection does not apply to accesses through an external debugger.

Related Links

11.6 Peripheral Access Controller (PAC)

25.5.9 Analog Connections

Not applicable.

Downloaded from Arrow.com.

25.6 Functional Description

25.6.1 Principle of Operation

The basic structure of the SERCOM serial engine is shown in Figure 25-2. Labels in capital letters are synchronous to the system clock and accessible by the CPU; labels in lowercase letters can be configured to run on the GCLK_SERCOMx_CORE clock or an external clock.

Figure 25-2. SERCOM Serial Engine

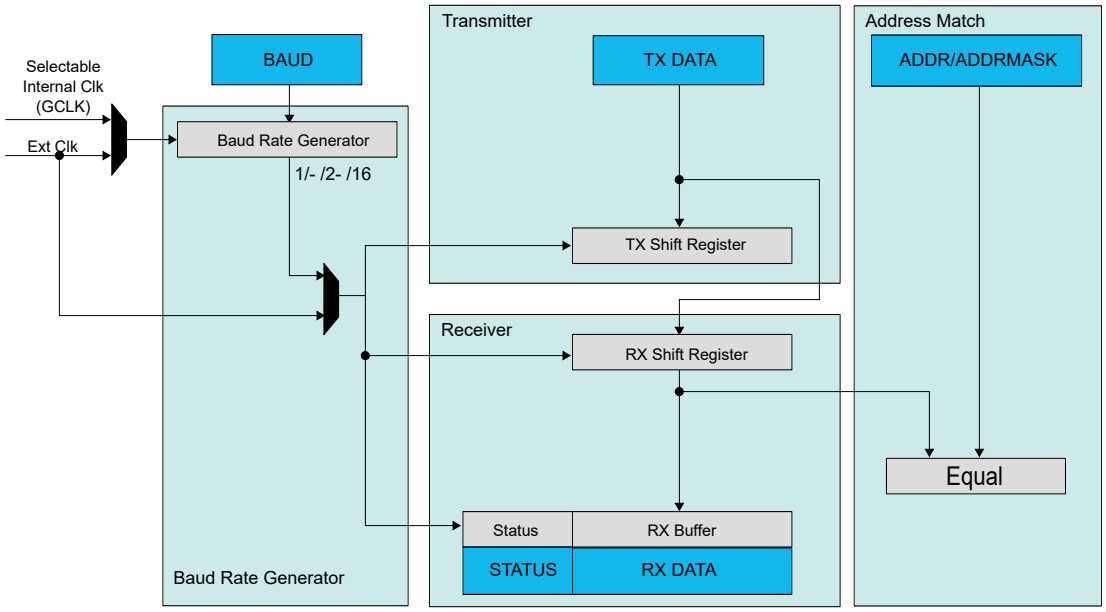

The transmitter consists of a single write buffer and a shift register.

The receiver consists of a one-level (I^2C), two-level (USART, SPI) receive buffer and a shift register.

The baud-rate generator is capable of running on the GCLK_SERCOMx_CORE clock or an external clock.

Address matching logic is included for SPI and I^2C operation.

25.6.2 Basic Operation

25.6.2.1 Initialization

The SERCOM must be configured to the desired mode by writing the Operating Mode bits in the Control A register (CTRLA.MODE) as shown in the table below.

Table 25-1. SERCOM Modes

CTRLA.MODE	Description
0x0	USART with external clock
0x1	USART with internal clock
0x2	SPI in client operation
0x3	SPI in host operation
0x4	I^2C client operation
0x5	I^2C host operation
0x6-0x7	Reserved

For further initialization information, see the respective SERCOM mode chapters:

Downloaded from Arrow.com.

Related Links

26. SERCOM USART
27. SERCOM SPI – SERCOM Serial Peripheral Interface
28. SERCOM I2C – Inter-Integrated Circuit

25.6.2.2 Enabling, Disabling, and Resetting

This peripheral is enabled by writing '1' to the Enable bit in the Control A register (CTRLA.ENABLE), and disabled by writing '0' to it.

Writing '1' to the Software Reset bit in the Control A register (CTRLA.SWRST) will reset all registers of this peripheral to their initial states, except the DBGCTRL register, and the peripheral is disabled.

Refer to the CTRLA register description for details.

25.6.2.3 Clock Generation – Baud-Rate Generator

The baud-rate generator, as shown in Figure 25-3, generates internal clocks for asynchronous and synchronous communication. The output frequency (f_{BAUD}) is determined by the Baud register (BAUD) setting and the baud reference frequency (f_{ref}). The baud reference clock is the serial engine clock, and it can be internal or external.

For asynchronous communication, the /16 (divide-by-16) output is used when transmitting, whereas the /1 (divide-by-1) output is used while receiving.

For synchronous communication, the /2 (divide-by-2) output is used.

This functionality is automatically configured, depending on the selected operating mode.

Figure 25-3. Baud Rate Generator

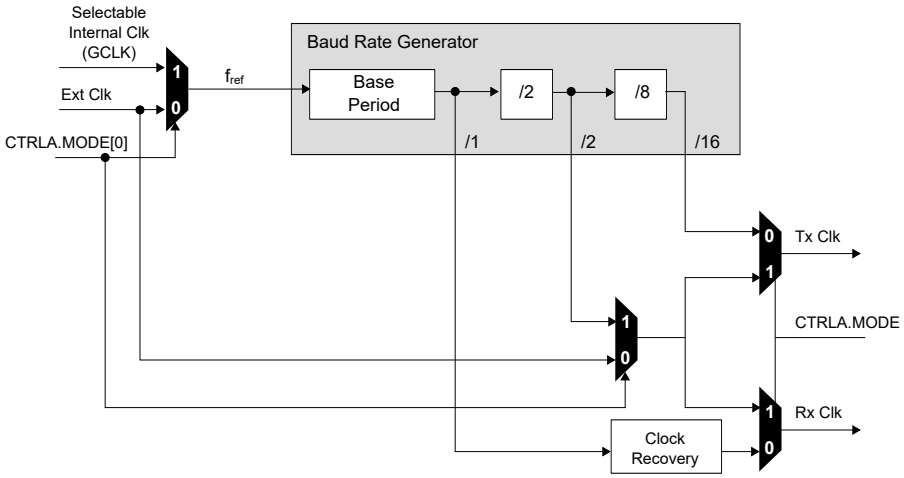

Table 25-2 contains equations for the baud rate (in bits per second) and the BAUD register value for each operating mode.

For asynchronous operation, there is one mode: *arithmetic mode*, the BAUD register value is 16 bits (0 to 65,535).

For synchronous operation, the BAUD register value is 8 bits (0 to 255).

Table 25-2. Baud Rate Equations

Operating Mode	Condition	Baud Rate (Bits Per Second)	BAUD Register Value Calculation
Asynchronous Arithmetic	$f_{BAUD} \leq \frac{f_{ref}}{16}$	$f_{BAUD} = \frac{f_{ref}}{16}\left(1 - \frac{BAUD}{65536}\right)$	$BAUD = 65536 \cdot \left(1 - S \cdot \frac{f_{BAUD}}{f_{ref}}\right)$
Asynchronous Fractional	$f_{BAUD} \leq \frac{f_{ref}}{S}$	$f_{BAUD} = \frac{f_{ref}}{S \cdot \left(BAUD + \frac{FP}{8}\right)}$	$BAUD = \frac{f_{ref}}{S \cdot f_{BAUD}} - \frac{FP}{8}$

Downloaded from Arrow.com.

.....continued			
Operating Mode	**Condition**	**Baud Rate (Bits Per Second)**	**BAUD Register Value Calculation**
Synchronous	$f_{BAUD} \leq \frac{f_{ref}}{2}$	$f_{BAUD} = \frac{f_{ref}}{2 \cdot (BAUD + 1)}$	$BAUD = \frac{f_{ref}}{2 \cdot f_{BAUD}} - 1$

S - Number of samples per bit, which can be 16, 8, or 3.

The Asynchronous Fractional option is used for auto-baud detection.

The baud rate error is represented by the following formula:

$$\text{Error} = 1 - \left(\frac{\text{ExpectedBaudRate}}{\text{ActualBaudRate}}\right)$$

25.6.2.3.1 Asynchronous Arithmetic Mode BAUD Value Selection

The formula given for f_{BAUD} calculates the average frequency over 65536 f_{ref} cycles. Although the BAUD register can be set to any value between 0 and 65536, the actual average frequency of f_{BAUD} over a single frame is more granular. The BAUD register values that will affect the average frequency over a single frame lead to an integer increase in the cycles per frame (CPF)

$$CPF = \frac{f_{ref}}{f_{BAUD}}(D + S)$$

where

- *D* represent the data bits per frame
- *S* represent the sum of start and first stop bits, if present.

Table 25-3 shows the BAUD register value versus baud frequency f_{BAUD} at a serial engine frequency of 48MHz. This assumes a *D* value of 8 bits and an *S* value of 2 bits (10 bits, including start and stop bits).

Table 25-3. BAUD Register Value vs. Baud Frequency

BAUD Register Value	Serial Engine CPF	f_{BAUD} at 48MHz Serial Engine Frequency (f_{REF})
0 – 406	160	3MHz
407 – 808	161	2.981MHz
809 – 1205	162	2.963MHz
...	...	...
65206	31775	15.11kHz
65207	31871	15.06kHz
65208	31969	15.01kHz

25.6.3 Additional Features

25.6.3.1 Address Match and Mask

The SERCOM address match and mask feature is capable of matching either one address, two unique addresses, or a range of addresses with a mask, based on the mode selected. The match uses seven or eight bits, depending on the mode.

25.6.3.1.1 Address With Mask

An address written to the Address bits in the Address register (ADDR.ADDR), and a mask written to the Address Mask bits in the Address register (ADDR.ADDRMASK) will yield an address match. All bits that are masked are not included in the match. Note that writing the ADDR.ADDRMASK to 'all zeros' will match a single unique address, while writing ADDR.ADDRMASK to 'all ones' will result in all addresses being accepted.

Downloaded from Arrow.com.

Figure 25-4. Address With Mask

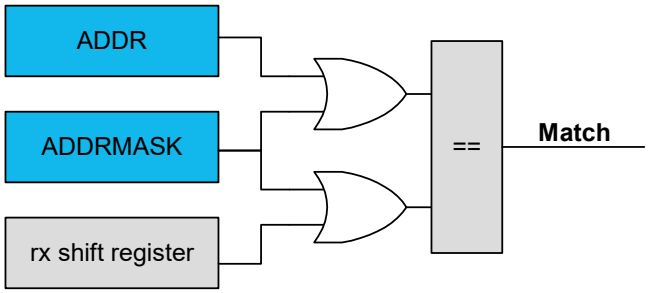

25.6.3.1.2 Two Unique Addresses

The two addresses written to ADDR and ADDRMASK will cause a match.

Figure 25-5. Two Unique Addresses

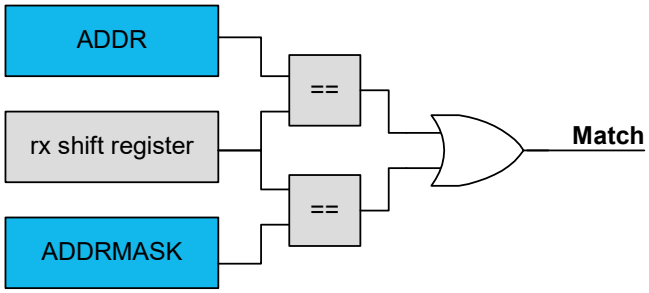

25.6.3.1.3 Address Range

The range of addresses between and including ADDR.ADDR and ADDR.ADDRMASK will cause a match. ADDR.ADDR and ADDR.ADDRMASK can be set to any two addresses, with ADDR.ADDR acting as the upper limit and ADDR.ADDRMASK acting as the lower limit.

Figure 25-6. Address Range



25.6.4 DMA Operation

The available DMA interrupts and their depend on the operation mode of the SERCOM peripheral. Refer to the Functional Description sections of the respective SERCOM mode.

Related Links

26. SERCOM USART
27. SERCOM SPI – SERCOM Serial Peripheral Interface
28. SERCOM I2C – Inter-Integrated Circuit

25.6.5 Interrupts

Interrupt sources are mode-specific. See the respective SERCOM mode chapters for details.

Each interrupt source has its own interrupt flag.

The interrupt flag in the Interrupt Flag Status and Clear register (INTFLAG) will be set when the interrupt condition is met.

Each interrupt can be individually enabled by writing '1' to the corresponding bit in the Interrupt Enable Set register (INTENSET), and disabled by writing '1' to the corresponding bit in the Interrupt Enable Clear register (INTENCLR).

An interrupt request is generated when the interrupt flag is set and the corresponding interrupt is enabled. The interrupt request remains active until either the interrupt flag is cleared, the interrupt is disabled, or the SERCOM is reset. For details on clearing interrupt flags, refer to the INTFLAG register description.

Downloaded from Arrow.com.

The value of INTFLAG indicates which interrupt condition occurred. The user must read the INTFLAG register to determine which interrupt condition is present.

Note: Interrupts must be globally enabled for interrupt requests.

Related Links

11.2 Nested Vector Interrupt Controller

25.6.6 Events

Not applicable.

25.6.7 Sleep Mode Operation

The peripheral can operate in any sleep mode where the selected serial clock is running. This clock can be external or generated by the internal baud-rate generator.

The SERCOM interrupts can be used to wake up the device from sleep modes. Refer to the different SERCOM mode chapters for details.

25.6.8 Synchronization

Due to asynchronicity between the main clock domain and the peripheral clock domains, some registers need to be synchronized when written or read.

Required write-synchronization is denoted by the "Write-Synchronized" property in the register description.

Required read-synchronization is denoted by the "Read-Synchronized" property in the register description.

Related Links

14.3 Register Synchronization

Downloaded from Arrow.com.

26. SERCOM USART

26.1 Overview

The Universal Synchronous and Asynchronous Receiver and Transmitter (USART) is one of the available modes in the Serial Communication Interface (SERCOM).

The USART uses the SERCOM transmitter and receiver, see 26.3 Block Diagram. Labels in uppercase letters are synchronous to CLK_SERCOMx_APB and accessible for CPU. Labels in lowercase letters can be programmed to run on the internal generic clock or an external clock.

The transmitter consists of a single write buffer, a shift register, and control logic for different frame formats. The write buffer support data transmission without any delay between frames. The receiver consists of a two-level receive buffer and a shift register. Status information of the received data is available for error checking. Data and clock recovery units ensure robust synchronization and noise filtering during asynchronous data reception.

Related Links

25. SERCOM – Serial Communication Interface

26.2 USART Features

- Full-duplex Operation
- Asynchronous (with Clock Reconstruction) or Synchronous Operation
- Internal or External Clock source for Asynchronous and Synchronous Operation
- Baud-rate Generator
- Supports Serial Frames with 5, 6, 7, 8 or 9 Data bits and 1 or 2 Stop bits
- Odd or Even Parity Generation and Parity Check
- Selectable LSB- or MSB-first Data Transfer
- Buffer Overflow and Frame Error Detection
- Noise Filtering, Including False Start bit Detection and Digital Low-pass Filter
- Collision Detection
- Can Operate in all Sleep modes
- Operation at Speeds up to Half the System Clock for Internally Generated Clocks
- Operation at Speeds up to the System Clock for Externally Generated Clocks
- RTS and CTS Flow Control
- IrDA Modulation and Demodulation up to 115.2kbps
- LIN Client Support
  - Auto-baud and break character detection
- Start-of-frame detection
- Can work with DMA

Related Links

25.2 Features

Downloaded from Arrow.com.

26.3 Block Diagram

Figure 26-1. USART Block Diagram

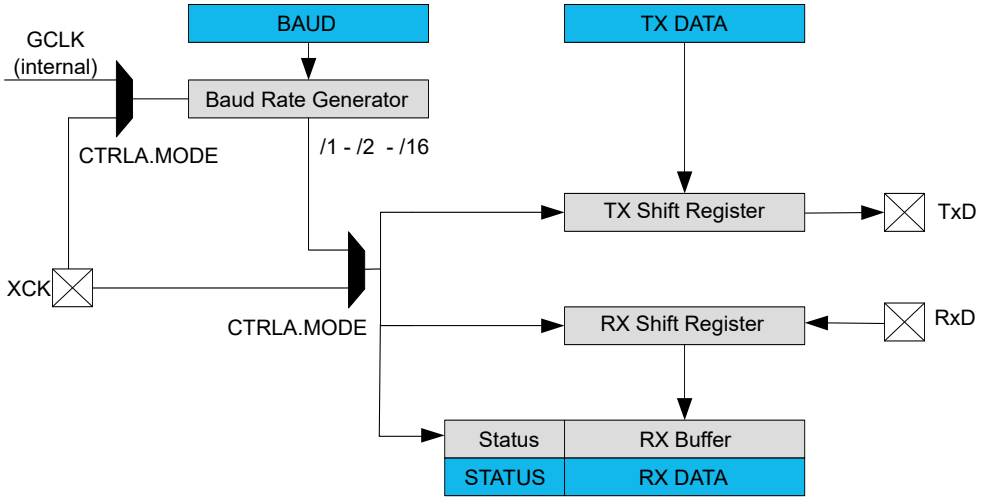

26.4 Signal Description

Table 26-1. SERCOM USART Signals

Signal Name	Type	Description
PAD[3:0]	Digital I/O	General SERCOM pins

One signal can be mapped to one of several pins.

Related Links

7. I/O Multiplexing and Considerations

26.5 Product Dependencies

In order to use this peripheral, other parts of the system must be configured correctly, as described below.

26.5.1 I/O Lines

Using the USART's I/O lines requires the I/O pins to be configured using the I/O Pin Controller (PORT).

When the SERCOM is used in USART mode, the SERCOM controls the direction and value of the I/O pins according to the table below. PORT Control bit PINCFGn.DRVSTR is still effective for the SERCOM output pins. PORT Control bit PINCFGn.PULLEN is still effective on the SERCOM input pins, but is limited to the enabling/disabling of a pull down only (it is not possible to enable/disable a pull up). If the receiver or transmitter is disabled, these pins can be used for other purposes.

The combined configuration of PORT and the Transmit Data Pinout and Receive Data Pinout bit fields in the CTRLA register (CTRLA.TXPO and CTRLA.RXPO, respectively) will define the physical position of the USART signals in the following table.

Table 26-2. USART Pin Configuration

Pin	Pin Configuration
TxD	Output
RxD	Input

Downloaded from Arrow.com.

.....continued	
Pin	**Pin Configuration**
XCK	Output or input

Related Links
23. PORT - I/O Pin Controller

26.5.2 Power Management
This peripheral can continue to operate in any sleep mode where its source clock is running. The interrupts can wake up the device from sleep modes.

Related Links
16. PM – Power Manager

26.5.3 Clocks
The SERCOM bus clock (CLK_SERCOMx_APB) can be enabled and disabled in the Power Manager. Refer to *Peripheral Clock Masking* for details and default status of this clock.

A generic clock (GCLK_SERCOMx_CORE) is required to clock the SERCOMx_CORE. This clock must be configured and enabled in the Generic Clock Controller before using the SERCOMx_CORE. Refer to *GCLK - Generic Clock Controller* for details.

This generic clock is asynchronous to the bus clock (CLK_SERCOMx_APB). Therefore, writing to certain registers will require synchronization to the clock domains. Refer to *Synchronization* for further details.

Related Links
26.6.6 Synchronization
15. GCLK - Generic Clock Controller
16.6.2.6 Peripheral Clock Masking

26.5.4 DMA
The DMA request lines are connected to the DMA Controller (DMAC). In order to use DMA requests with this peripheral the DMAC must be configured first. Refer to *DMAC – Direct Memory Access Controller* for details.

Related Links
20. DMAC – Direct Memory Access Controller

26.5.5 Interrupts
The interrupt request line is connected to the Interrupt Controller. In order to use interrupt requests of this peripheral, the Interrupt Controller (NVIC) must be configured first. Refer to *Nested Vector Interrupt Controller* for details.

Related Links
11.2 Nested Vector Interrupt Controller

26.5.6 Events
Not applicable.

26.5.7 Debug Operation
When the CPU is halted in debug mode, this peripheral will continue normal operation. If the peripheral is configured to require periodical service by the CPU through interrupts or similar, improper operation or data loss may result during debugging. This peripheral can be forced to halt operation during debugging - refer to the Debug Control (DBGCTRL) register for details.

Related Links
26.8.11 DBGCTRL

26.5.8 Register Access Protection
Registers with write-access can be write-protected optionally by the peripheral access controller (PAC).

Downloaded from Arrow.com.

PAC Write-Protection is not available for the following registers:

- Interrupt Flag Clear and Status register (INTFLAG)
- Status register (STATUS)
- Data register (DATA)

Optional PAC Write-Protection is denoted by the "PAC Write-Protection" property in each individual register description.

Write-protection does not apply to accesses through an external debugger.

Related Links

11.6 Peripheral Access Controller (PAC)

26.5.9 Analog Connections

Not applicable.

26.6 Functional Description

26.6.1 Principle of Operation

The USART uses the following lines for data transfer:

- RxD for receiving
- TxD for transmitting
- XCK for the transmission clock in synchronous operation

USART data transfer is frame based. A serial frame consists of:

- 1 start bit
- From 5 to 9 data bits (MSB or LSB first)
- No, even or odd parity bit
- 1 or 2 stop bits

A frame starts with the start bit followed by one character of data bits. If enabled, the parity bit is inserted after the data bits and before the first stop bit. After the stop bit(s) of a frame, either the next frame can follow immediately, or the communication line can return to the idle (high) state. The figure below illustrates the possible frame formats. Brackets denote optional bits.

Figure 26-2. Frame Formats

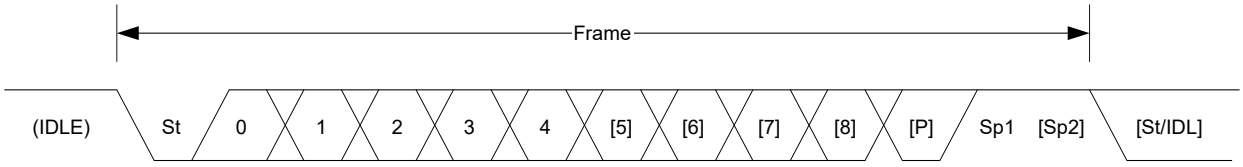

St Start bit. Signal is always low.

n, [n] Data bits. 0 to [5..9]

[P] Parity bit. Either odd or even.

Sp, [Sp] Stop bit. Signal is always high.

IDLE No frame is transferred on the communication line. Signal is always high in this state.

Downloaded from Arrow.com.

26.6.2 Basic Operation

26.6.2.1 Initialization

The following registers are enable-protected, meaning they can only be written when the USART is disabled (CTRL.ENABLE=0):

- Control A register (CTRLA), except the Enable (ENABLE) and Software Reset (SWRST) bits.
- Control B register (CTRLB), except the Receiver Enable (RXEN) and Transmitter Enable (TXEN) bits.
- Baud register (BAUD)

When the USART is enabled or is being enabled (CTRLA.ENABLE=1), any writing attempt to these registers will be discarded. If the peripheral is being disabled, writing to these registers will be executed after disabling is completed. Enable-protection is denoted by the "Enable-Protection" property in the register description.

Before the USART is enabled, it must be configured by these steps:

1. Select either external (0x0) or internal clock (0x1) by writing the Operating Mode value in the CTRLA register (CTRLA.MODE).
2. Select either asynchronous (0) or or synchronous (1) communication mode by writing the Communication Mode bit in the CTRLA register (CTRLA.CMODE).
3. Select pin for receive data by writing the Receive Data Pinout value in the CTRLA register (CTRLA.RXPO).
4. Select pads for the transmitter and external clock by writing the Transmit Data Pinout bit in the CTRLA register (CTRLA.TXPO).
5. Configure the Character Size field in the CTRLB register (CTRLB.CHSIZE) for character size.
6. Set the Data Order bit in the CTRLA register (CTRLA.DORD) to determine MSB- or LSB-first data transmission.
7. To use parity mode:
   a. Enable parity mode by writing 0x1 to the Frame Format field in the CTRLA register (CTRLA.FORM).
   b. Configure the Parity Mode bit in the CTRLB register (CTRLB.PMODE) for even or odd parity.
8. Configure the number of stop bits in the Stop Bit Mode bit in the CTRLB register (CTRLB.SBMODE).
9. When using an internal clock, write the Baud register (BAUD) to generate the desired baud rate.
10. Enable the transmitter and receiver by writing '1' to the Receiver Enable and Transmitter Enable bits in the CTRLB register (CTRLB.RXEN and CTRLB.TXEN).

26.6.2.2 Enabling, Disabling, and Resetting

This peripheral is enabled by writing '1' to the Enable bit in the Control A register (CTRLA.ENABLE), and disabled by writing '0' to it.

Writing ‘1’ to the Software Reset bit in the Control A register (CTRLA.SWRST) will reset all registers of this peripheral to their initial states, except the DBGCTRL register, and the peripheral is disabled.

Refer to the CTRLA register description for details.

26.6.2.3 Clock Generation and Selection

For both synchronous and asynchronous modes, the clock used for shifting and sampling data can be generated internally by the SERCOM baud-rate generator or supplied externally through the XCK line.

The synchronous mode is selected by writing a '1' to the Communication Mode bit in the Control A register (CTRLA.CMODE), the asynchronous mode is selected by writing a zero to CTRLA.CMODE.

The internal clock source is selected by writing 0x1 to the Operation Mode bit field in the Control A register (CTRLA.MODE), the external clock source is selected by writing 0x0 to CTRLA.MODE.

The SERCOM baud-rate generator is configured as in the figure below.

In asynchronous mode (CTRLA.CMODE=0), the 16-bit Baud register value is used.

In synchronous mode (CTRLA.CMODE=1), the eight LSBs of the Baud register are used. Refer to *Clock Generation – Baud-Rate Generator* for details on configuring the baud rate.

Downloaded from Arrow.com.

Figure 26-3. Clock Generation

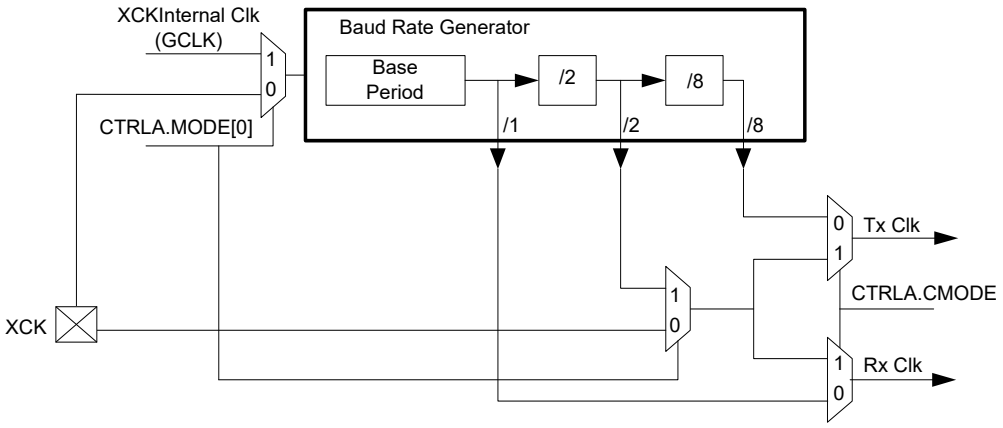

Related Links

25.6.2.3 Clock Generation – Baud-Rate Generator

25.6.2.3.1 Asynchronous Arithmetic Mode BAUD Value Selection

26.6.2.3.1 Synchronous Clock Operation

In synchronous mode, the CTRLA.MODE bit field determines whether the transmission clock line (XCK) serves either as input or output. The dependency between clock edges, data sampling, and data change is the same for internal and external clocks. Data input on the RxD pin is sampled at the opposite XCK clock edge when data is driven on the TxD pin.

The Clock Polarity bit in the Control A register (CTRLA.CPOL) selects which XCK clock edge is used for RxD sampling, and which is used for TxD change:

When CTRLA.CPOL is '0', the data will be changed on the rising edge of XCK, and sampled on the falling edge of XCK.

When CTRLA.CPOL is '1', the data will be changed on the falling edge of XCK, and sampled on the rising edge of XCK.

Figure 26-4. Synchronous Mode XCK Timing

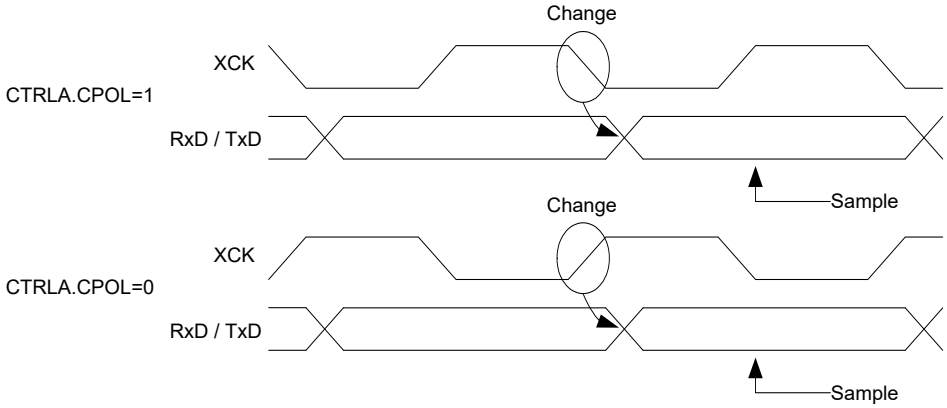

When the clock is provided through XCK (CTRLA.MODE=0x0), the shift registers operate directly on the XCK clock. This means that XCK is not synchronized with the system clock and, therefore, can operate at frequencies up to the system frequency.

26.6.2.4 Data Register

The USART Transmit Data register (TxDATA) and USART Receive Data register (RxDATA) share the same I/O address, referred to as the Data register (DATA). Writing the DATA register will update the TxDATA register. Reading the DATA register will return the contents of the RxDATA register.

Downloaded from Arrow.com.

26.6.2.5 Data Transmission

Data transmission is initiated by writing the data to be sent into the DATA register. Then, the data in TxDATA will be moved to the shift register when the shift register is empty and ready to send a new frame. After the shift register is loaded with data, the data frame will be transmitted.

When the entire data frame including stop bit(s) has been transmitted and no new data was written to DATA, the Transmit Complete interrupt flag in the Interrupt Flag Status and Clear register (INTFLAG.TXC) will be set, and the optional interrupt will be generated.

The Data Register Empty flag in the Interrupt Flag Status and Clear register (INTFLAG.DRE) indicates that the register is empty and ready for new data. The DATA register should only be written to when INTFLAG.DRE is set.

26.6.2.5.1 Disabling the Transmitter

The transmitter is disabled by writing '0' to the Transmitter Enable bit in the CTRLB register (CTRLB.TXEN).

Disabling the transmitter will complete only after any ongoing and pending transmissions are completed, i.e., there is no data in the transmit shift register and TxDATA to transmit.

26.6.2.6 Data Reception

The receiver accepts data when a valid Start bit is detected. Each bit following the Start bit will be sampled according to the baud rate or XCK clock, and shifted into the receive Shift register until the first Stop bit of a frame is received. The second Stop bit will be ignored by the receiver.

When the first Stop bit is received and a complete serial frame is present in the Receive Shift register, the contents of the Shift register will be moved into the two-level receive buffer. Then, the Receive Complete Interrupt flag in the Interrupt Flag Status and Clear register (INTFLAG.RXC) will be set, and the optional interrupt can be generated.

The received data can be read from the DATA register when the Receive Complete Interrupt flag is set.

26.6.2.6.1 Disabling the Receiver

Writing '0' to the Receiver Enable bit in the CTRLB register (CTRLB.RXEN) will disable the receiver, flush the two-level receive buffer, and data from ongoing receptions will be lost.

26.6.2.6.2 Error Bits

The USART receiver has three error bits in the Status (STATUS) register: Frame Error (FERR), Buffer Overflow (BUFOVF), and Parity Error (PERR). Once an error happens, the corresponding error bit will be set until it is cleared by writing `1` to it. These bits are also cleared automatically when the receiver is disabled.

There are two methods for buffer overflow notification, selected by the Immediate Buffer Overflow Notification bit in the Control A register (CTRLA.IBON):

When CTRLA.IBON=1, STATUS.BUFOVF is raised immediately upon buffer overflow. Software can then empty the receive FIFO by reading RxDATA, until the Receiver Complete Interrupt flag (INTFLAG.RXC) is cleared.

When CTRLA.IBON=0, the Buffer Overflow condition travels with data through the receive FIFO. After the received data is read, STATUS.BUFOVF and INTFLAG.ERROR will be set along with INTFLAG.RXC.

26.6.2.6.3 Asynchronous Data Reception

The USART includes a clock recovery and data recovery unit for handling asynchronous data reception.

The clock recovery logic can synchronize the incoming asynchronous serial frames at the RxD pin to the internally generated baud-rate clock.

The data recovery logic samples and applies a low-pass filter to each incoming bit, thereby improving the noise immunity of the receiver.

26.6.2.6.4 Asynchronous Operational Range

The operational range of the asynchronous reception depends on the accuracy of the internal baud-rate clock, the rate of the incoming frames, and the frame size (in number of bits). In addition, the operational range of the receiver is depending on the difference between the received bit rate and the internally generated baud rate. If the baud rate of an external transmitter is too high or too low compared to the internally generated baud rate, the receiver will not be able to synchronize the frames to the start bit.

There are two possible sources for a mismatch in baud rate: First, the reference clock will always have some minor instability. Second, the baud-rate generator cannot always do an exact division of the reference clock frequency to

Downloaded from Arrow.com.

get the baud rate desired. In this case, the BAUD register value should be set to give the lowest possible error. Refer to *Clock Generation – Baud-Rate Generator* for details.

Recommended maximum receiver baud-rate errors for various character sizes are shown in the table below.

Table 26-3. Asynchronous Receiver Error for 16-fold Oversampling

D (Data bits+Parity)	R_{SLOW} [%]	R_{FAST} [%]	Max. total error [%]	Recommended max. Rx error [%]
5	94.12	107.69	+5.88/-7.69	±2.5
6	94.92	106.67	+5.08/-6.67	±2.0
7	95.52	105.88	+4.48/-5.88	±2.0
8	96.00	105.26	+4.00/-5.26	±2.0
9	96.39	104.76	+3.61/-4.76	±1.5
10	96.70	104.35	+3.30/-4.35	±1.5

The following equations calculate the ratio of the incoming data rate and internal receiver baud rate:

$$R_{SLOW} = \frac{(D+1)S}{S-1+D\cdot S+S_F} \quad , \qquad R_{FAST} = \frac{(D+2)S}{(D+1)S+S_M}$$

- R_{SLOW} is the ratio of the slowest incoming data rate that can be accepted in relation to the receiver baud rate
- R_{FAST} is the ratio of the fastest incoming data rate that can be accepted in relation to the receiver baud rate
- D is the sum of character size and parity size (D = 5 to 10 bits)
- S is the number of samples per bit (S = 16, 8 or 3)
- S_F is the first sample number used for majority voting (S_F = 7, 3, or 2) when CTRLA.SAMPA=0.
- S_M is the middle sample number used for majority voting (S_M = 8, 4, or 2) when CTRLA.SAMPA=0.

The recommended maximum Rx Error assumes that the receiver and transmitter equally divide the maximum total error. Its connection to the SERCOM Receiver error acceptance is depicted in this figure:

Figure 26-5. USART Rx Error Calculation

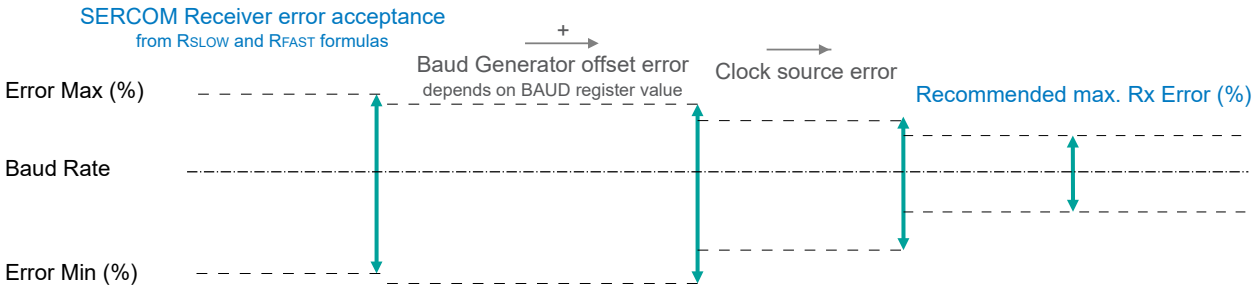

The recommendation values in the table above accommodate errors of the clock source and the baud generator. The following figure gives an example for a baud rate of 3Mbps:

Downloaded from Arrow.com.

Figure 26-6. USART Rx Error Calculation Example

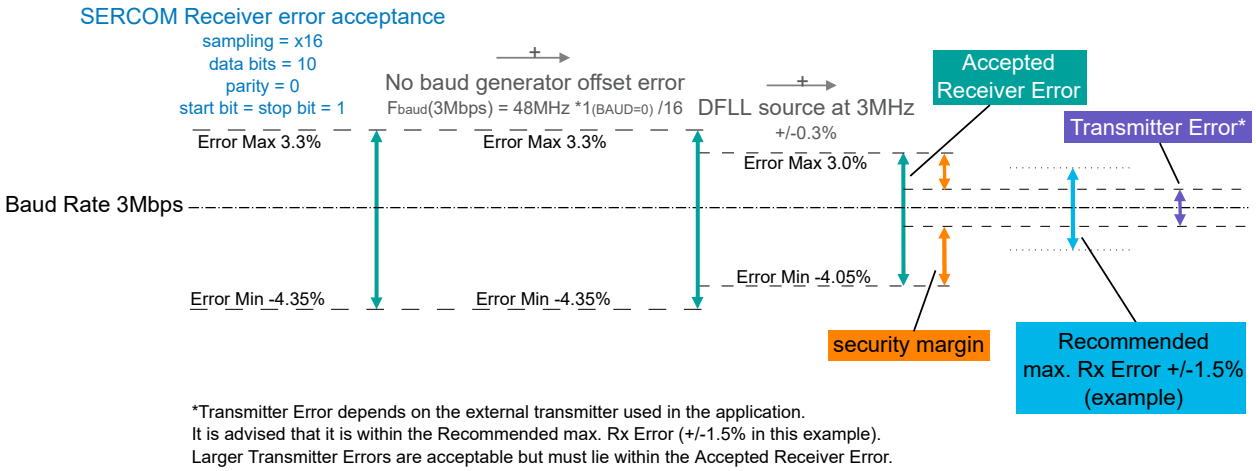

*Transmitter Error depends on the external transmitter used in the application.
It is advised that it is within the Recommended max. Rx Error (+/-1.5% in this example).
Larger Transmitter Errors are acceptable but must lie within the Accepted Receiver Error.

Related Links

25.6.2.3 Clock Generation – Baud-Rate Generator

25.6.2.3.1 Asynchronous Arithmetic Mode BAUD Value Selection

26.6.3 Additional Features

26.6.3.1 Parity

Even or odd parity can be selected for error checking by writing 0x1 to the Frame Format bit field in the Control A register (CTRLA.FORM).

If *even parity* is selected (CTRLB.PMODE=0), the parity bit of an outgoing frame is '1' if the data contains an odd number of bits that are '1', making the total number of '1' even.

If *odd parity* is selected (CTRLB.PMODE=1), the parity bit of an outgoing frame is '1' if the data contains an even number of bits that are '0', making the total number of '1' odd.

When parity checking is enabled, the parity checker calculates the parity of the data bits in incoming frames and compares the result with the parity bit of the corresponding frame. If a parity error is detected, the Parity Error bit in the Status register (STATUS.PERR) is set.

26.6.3.2 Hardware Handshaking

The USART features an out-of-band hardware handshaking flow control mechanism, implemented by connecting the RTS and CTS pins with the remote device, as shown in the figure below.

Figure 26-7. Connection with a Remote Device for Hardware Handshaking

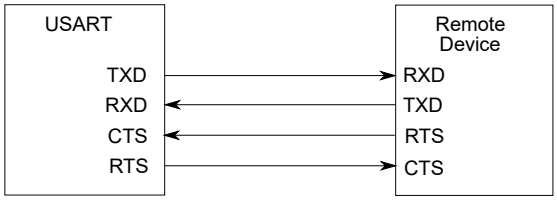

Hardware handshaking is only available in the following configuration:

- USART with internal clock (CTRLA.MODE=1),
- Asynchronous mode (CTRLA.CMODE=0),
- and Flow control pinout (CTRLA.TXPO=2).

When the receiver is disabled or the receive FIFO is full, the receiver will drive the RTS pin high. This notifies the remote device to stop transfer after the ongoing transmission. Enabling and disabling the receiver by writing to CTRLB.RXEN will set/clear the RTS pin after a synchronization delay. When the receive FIFO goes full, RTS will be set immediately and the frame being received will be stored in the shift register until the receive FIFO is no longer full.

Downloaded from Arrow.com.

Figure 26-8. Receiver Behavior when Operating with Hardware Handshaking

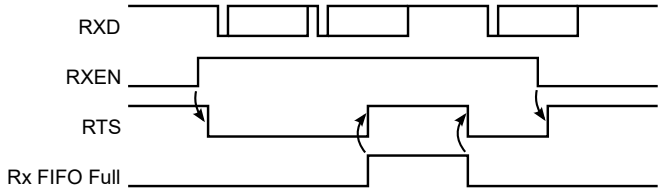

The current CTS Status is in the STATUS register (STATUS.CTS). Character transmission will start only if STATUS.CTS=0. When CTS is set, the transmitter will complete the ongoing transmission and stop transmitting.

Figure 26-9. Transmitter Behavior when Operating with Hardware Handshaking

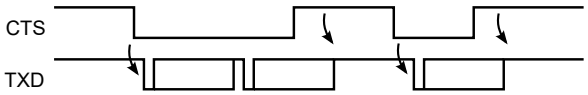

26.6.3.3 IrDA Modulation and Demodulation

Transmission and reception can be encoded IrDA compliant up to 115.2 kb/s. IrDA modulation and demodulation work in the following configuration:

- IrDA encoding enabled (CTRLB.ENC=1),
- Asynchronous mode (CTRLA.CMODE=0),
- and 16x sample rate (CTRLA.SAMPR[0]=0).

During transmission, each low bit is transmitted as a high pulse. The pulse width is 3/16 of the baud rate period, as illustrated in the figure below.

Figure 26-10. IrDA Transmit Encoding

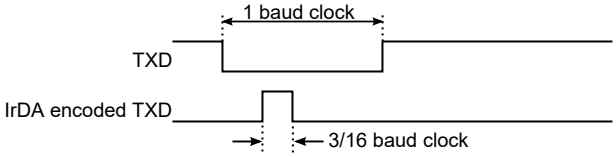

The reception decoder has two main functions.

The first is to synchronize the incoming data to the IrDA baud rate counter. Synchronization is performed at the start of each zero pulse.

The second main function is to decode incoming Rx data. If a pulse width meets the minimum length set by configuration (RXPL.RXPL), it is accepted. When the baud rate counter reaches its middle value (1/2 bit length), it is transferred to the receiver.

Note: Note that the polarity of the transmitter and receiver are opposite: During transmission, a '0' bit is transmitted as a '1' pulse. During reception, an accepted '0' pulse is received as a '0' bit.

Example: The figure below illustrates reception where RXPL.RXPL is set to 19. This indicates that the pulse width should be at least 20 SE clock cycles. When using BAUD=0xE666 or 160 SE cycles per bit, this corresponds to 2/16 baud clock as minimum pulse width required. In this case the first bit is accepted as a '0', the second bit is a '1', and the third bit is also a '1'. A low pulse is rejected since it does not meet the minimum requirement of 2/16 baud clock.

Figure 26-11. IrDA Receive Decoding

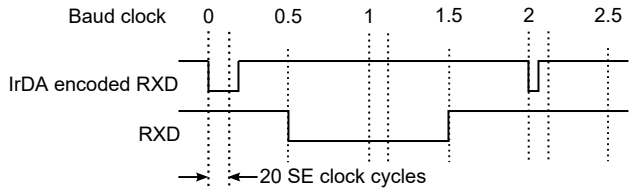

Downloaded from Arrow.com.

26.6.3.4 Break Character Detection and Auto-Baud

Break character detection and auto-baud are available in this configuration:

- Auto-baud frame format (CTRLA.FORM = 0x04 or 0x05),
- Asynchronous mode (CTRLA.CMODE = 0),
- and 16x sample rate using fractional baud rate generation (CTRLA.SAMPR = 1).

The USART uses a break detection threshold of greater than 11 nominal bit times at the configured baud rate. At any time, if more than 11 consecutive dominant bits are detected on the bus, the USART detects a Break Field. When a Break Field has been detected, the Receive Break interrupt flag (INTFLAG.RXBRK) is set and the USART expects the Sync Field character to be 0x55. This field is used to update the actual baud rate in order to stay synchronized. If the received Sync character is not 0x55, then the Inconsistent Sync Field error flag (STATUS.ISF) is set along with the Error interrupt flag (INTFLAG.ERROR), and the baud rate is unchanged.

After a break field is detected and the start bit of the Sync Field is detected, a counter is started. The counter is then incremented for the next 8 bit times of the Sync Field. At the end of these 8 bit times, the counter is stopped. At this moment, the 13 most significant bits of the counter (value divided by 8) give the new clock divider (BAUD.BAUD), and the 3 least significant bits of this value (the remainder) give the new Fractional Part (BAUD.FP).

When the Sync Field has been received, the clock divider (BAUD.BAUD) and the Fractional Part (BAUD.FP) are updated after a synchronization delay. After the Break and Sync Fields are received, multiple characters of data can be received.

26.6.3.5 Collision Detection

When the receiver and transmitter are connected either through pin configuration or externally, transmit collision can be detected after selecting the Collision Detection Enable bit in the CTRLB register (CTRLB.COLDEN=1). To detect collision, the receiver and transmitter must be enabled (CTRLB.RXEN=1 and CTRLB.TXEN=1).

Collision detection is performed for each bit transmitted by comparing the received value with the transmit value, as shown in the figure below. While the transmitter is idle (no transmission in progress), characters can be received on RxD without triggering a collision.

Figure 26-12. Collision Checking

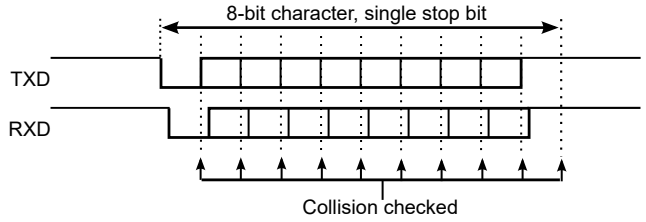

The next figure shows the conditions for a collision detection. In this case, the start bit and the first data bit are received with the same value as transmitted. The second received data bit is found to be different than the transmitted bit at the detection point, which indicates a collision.

Figure 26-13. Collision Detected

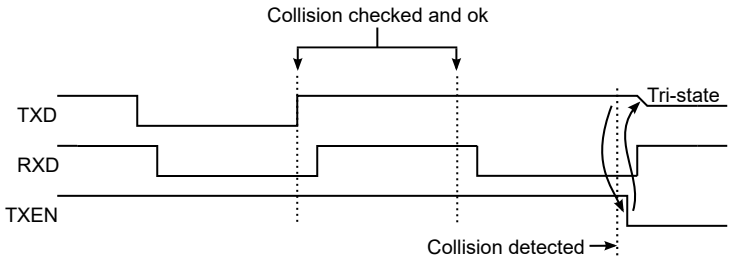

When a collision is detected, the USART follows this sequence:

1. Abort the current transfer.
2. Flush the transmit buffer.
3. Disable transmitter (CTRLB.TXEN=0)
   - This is done after a synchronization delay. The CTRLB Synchronization Busy bit (SYNCBUSY.CTRLB) will be set until this is complete.

Downloaded from Arrow.com.

– After disabling, the TxD pin will be tri-stated.

4. Set the Collision Detected bit (STATUS.COLL) along with the Error interrupt flag (INTFLAG.ERROR).
5. Set the Transmit Complete interrupt flag (INTFLAG.TXC), since the transmit buffer no longer contains data.

After a collision, software must manually enable the transmitter again before continuing, after assuring that the CTRLB Synchronization Busy bit (SYNCBUSY.CTRLB) is not set.

26.6.3.6 Loop-Back Mode

For loop-back mode, configure the Receive Data Pinout (CTRLA.RXPO) and Transmit Data Pinout (CTRLA.TXPO) to use the same data pins for transmit and receive. The loop-back is through the pad, so the signal is also available externally.

26.6.3.7 Start-of-Frame Detection

The USART start-of-frame detector can wake up the CPU when it detects a start bit. In standby sleep mode, the internal fast startup oscillator must be selected as the GCLK_SERCOMx_CORE source.

When a 1-to-0 transition is detected on RxD, the 8MHz Internal Oscillator is powered up and the USART clock is enabled. After startup, the rest of the data frame can be received, provided that the baud rate is slow enough in relation to the fast startup internal oscillator start-up time. Refer to *Electrical Characteristics* for details. The start-up time of this oscillator varies with supply voltage and temperature.

The USART start-of-frame detection works both in asynchronous and synchronous modes. It is enabled by writing '1' to the Start of Frame Detection Enable bit in the Control B register (CTRLB.SFDE).

If the Receive Start Interrupt Enable bit in the Interrupt Enable Set register (INTENSET.RXS) is set, the Receive Start interrupt is generated immediately when a start is detected.

When using start-of-frame detection without the Receive Start interrupt, start detection will force the 8MHz Internal Oscillator and USART clock active while the frame is being received. In this case, the CPU will not wake up until the Receive Complete interrupt is generated.

Related Links

37. Electrical Characteristics at 85°C

26.6.3.8 Sample Adjustment

In asynchronous mode (CTRLA.CMODE=0), three samples in the middle are used to determine the value based on majority voting. The three samples used for voting can be selected using the Sample Adjustment bit field in Control A register (CTRLA.SAMPA). When CTRLA.SAMPA=0, samples 7-8-9 are used for 16x oversampling, and samples 3-4-5 are used for 8x oversampling.

26.6.4 DMA, Interrupts and Events

Table 26-4. Module Request for SERCOM USART

Condition	Request		
	DMA	Interrupt	Event
Data Register Empty (DRE)	Yes (request cleared when data is written)	Yes	NA
Receive Complete (RXC)	Yes (request cleared when data is read)	Yes	
Transmit Complete (TXC)	NA	Yes	
Receive Start (RXS)	NA	Yes	
Clear to Send Input Change (CTSIC)	NA	Yes	
Receive Break (RXBRK)	NA	Yes	
Error (ERROR)	NA	Yes	

Downloaded from Arrow.com.

26.6.4.1 DMA Operation

The USART generates the following DMA requests:

- Data received (RX): The request is set when data is available in the receive FIFO. The request is cleared when DATA is read.
- Data transmit (TX): The request is set when the transmit buffer (TX DATA) is empty. The request is cleared when DATA is written.

26.6.4.2 Interrupts

The USART has the following interrupt sources. These are asynchronous interrupts, and can wake up the device from any sleep mode:

- Data Register Empty (DRE)
- Receive Complete (RXC)
- Transmit Complete (TXC)
- Receive Start (RXS)
- Clear to Send Input Change (CTSIC)
- Received Break (RXBRK)
- Error (ERROR)

Each interrupt source has its own interrupt flag. The interrupt flag in the Interrupt Flag Status and Clear register (INTFLAG) will be set when the interrupt condition is met. Each interrupt can be individually enabled by writing '1' to the corresponding bit in the Interrupt Enable Set register (INTENSET), and disabled by writing '1' to the corresponding bit in the Interrupt Enable Clear register (INTENCLR).

An interrupt request is generated when the interrupt flag is set and if the corresponding interrupt is enabled. The interrupt request remains active until either the interrupt flag is cleared, the interrupt is disabled, or the USART is reset. For details on clearing interrupt flags, refer to the INTFLAG register description.

The value of INTFLAG indicates which interrupt is executed. Note that interrupts must be globally enabled for interrupt requests. Refer to *Nested Vector Interrupt Controller* for details.

Related Links

11.2 Nested Vector Interrupt Controller

26.6.4.3 Events

Not applicable.

26.6.5 Sleep Mode Operation

The behavior in sleep mode is depending on the clock source and the Run In Standby bit in the Control A register (CTRLA.RUNSTDBY):

- Internal clocking, CTRLA.RUNSTDBY=1: GCLK_SERCOMx_CORE can be enabled in all sleep modes. Any interrupt can wake up the device.
- External clocking, CTRLA.RUNSTDBY=1: The Receive Start and the Receive Complete interrupt(s) can wake up the device.
- Internal clocking, CTRLA.RUNSTDBY=0: Internal clock will be disabled, after any ongoing transfer was completed. The Receive Start and the Receive Complete interrupt(s) can wake up the device.
- External clocking, CTRLA.RUNSTDBY=0: External clock will be disconnected, after any ongoing transfer was completed. All reception will be dropped.

26.6.6 Synchronization

Due to asynchronicity between the main clock domain and the peripheral clock domains, some registers need to be synchronized when written or read.

The following bits are synchronized when written:

- Software Reset bit in the CTRLA register (CTRLA.SWRST)
- Enable bit in the CTRLA register (CTRLA.ENABLE)
- Receiver Enable bit in the CTRLB register (CTRLB.RXEN)

Downloaded from Arrow.com.

- Transmitter Enable bit in the Control B register (CTRLB.TXEN)

Note: CTRLB.RXEN is write-synchronized somewhat differently. See also 26.8.2 CTRLB for details.

Required write-synchronization is denoted by the "Write-Synchronized" property in the register description.

Related Links

14.3 Register Synchronization

Downloaded from Arrow.com.

26.7 Register Summary

Offset	Name	Bit Pos.	7	6	5	4	3	2	1	0
0x00	CTRLA	7:0	RUNSTDBY			MODE[2:0]			ENABLE	SWRST
		15:8	SAMPR[2:0]							IBON
		23:16	SAMPA[1:0]		RXPO[1:0]				TXPO[1:0]	
		31:24		DORD	CPOL	CMODE	FORM[3:0]			
0x04	CTRLB	7:0		SBMODE				CHSIZE[2:0]		
		15:8			PMODE			ENC	SFDE	COLDEN
		23:16							RXEN	TXEN
		31:24								
0x08 ... 0x0B	Reserved									
0x0C	BAUD	7:0	BAUD[7:0]							
		15:8	BAUD[15:8]							
0x0E	RXPL	7:0	RXPL[7:0]							
0x0F ... 0x13	Reserved									
0x14	INTENCLR	7:0	ERROR		RXBRK	CTSIC	RXS	RXC	TXC	DRE
0x15	Reserved									
0x16	INTENSET	7:0	ERROR		RXBRK	CTSIC	RXS	RXC	TXC	DRE
0x17	Reserved									
0x18	INTFLAG	7:0	ERROR		RXBRK	CTSIC	RXS	RXC	TXC	DRE
0x19	Reserved									
0x1A	STATUS	7:0		TXE	COLL	ISF	CTS	BUFOVF	FERR	PERR
		15:8								
0x1C	SYNCBUSY	7:0						CTRLB	ENABLE	SWRST
		15:8								
		23:16								
		31:24								
0x20 ... 0x27	Reserved									
0x28	DATA	7:0	DATA[7:0]							
		15:8								DATA[8]
0x2A ... 0x2F	Reserved									
0x30	DBGCTRL	7:0								DBGSTOP

26.8 Register Description

Registers can be 8, 16, or 32 bits wide. Atomic 8-, 16-, and 32-bit accesses are supported. In addition, the 8-bit quarters and 16-bit halves of a 32-bit register, and the 8-bit halves of a 16-bit register can be accessed directly.

Some registers require synchronization when read and/or written. Synchronization is denoted by the "Read-Synchronized" and/or "Write-Synchronized" property in each individual register description.

Optional write-protection by the Peripheral Access Controller (PAC) is denoted by the "PAC Write-Protection" property in each individual register description.

Some registers are enable-protected, meaning they can only be written when the module is disabled. Enable-protection is denoted by the "Enable-Protected" property in each individual register description.

Downloaded from Arrow.com.

26.8.1 Control A

Name: CTRLA
Offset: 0x00
Reset: 0x00000000
Property: PAC Write-Protection, Enable-Protected

Bit	31	30	29	28	27	26	25	24
		DORD	CPOL	CMODE	FORM[3:0]			
Access		R/W	R/W	R/W	R/W	R/W	R/W	R/W
Reset		0	0	0	0	0	0	0

Bit	23	22	21	20	19	18	17	16
	SAMPA[1:0]		RXPO[1:0]				TXPO[1:0]	
Access	R/W	R/W	R/W	R/W			R/W	R/W
Reset	0	0	0	0			0	0

Bit	15	14	13	12	11	10	9	8
	SAMPR[2:0]							IBON
Access	R/W	R/W	R/W					R/W
Reset	0	0	0					0

Bit	7	6	5	4	3	2	1	0
	RUNSTDBY			MODE[2:0]			ENABLE	SWRST
Access	R/W			R/W	R/W	R/W	R/W	R/W
Reset	0			0	0	0	0	0

Bit 30 – DORD Data Order
This bit selects the data order when a character is shifted out from the Data register.
This bit is not synchronized.

Value	Description
0	MSB is transmitted first.
1	LSB is transmitted first.

Bit 29 – CPOL Clock Polarity
This bit selects the relationship between data output change and data input sampling in synchronous mode.
This bit is not synchronized.

CPOL	TxD Change	RxD Sample
0x0	Rising XCK edge	Falling XCK edge
0x1	Falling XCK edge	Rising XCK edge

Bit 28 – CMODE Communication Mode
This bit selects asynchronous or synchronous communication.
This bit is not synchronized.

Value	Description
0	Asynchronous communication.
1	Synchronous communication.

Bits 27:24 – FORM[3:0] Frame Format
These bits define the frame format.
These bits are not synchronized.

FORM[3:0]	Description
0x0	USART frame
0x1	USART frame with parity

Downloaded from Arrow.com.

.....continued	
FORM[3:0]	**Description**
0x2-0x3	Reserved
0x4	Auto-baud (LIN Client) - break detection and auto-baud.
0x5	Auto-baud - break detection and auto-baud with parity
0x6-0xF	Reserved

Bits 23:22 – SAMPA[1:0] Sample Adjustment
These bits define the sample adjustment.
These bits are not synchronized.

SAMPA[1:0]	16x Over-sampling (CTRLA.SAMPR=0 or 1)	8x Over-sampling (CTRLA.SAMPR=2 or 3)
0x0	7-8-9	3-4-5
0x1	9-10-11	4-5-6
0x2	11-12-13	5-6-7
0x3	13-14-15	6-7-8

Bits 21:20 – RXPO[1:0] Receive Data Pinout
These bits define the receive data (RxD) pin configuration.
These bits are not synchronized.

RXPO[1:0]	Name	Description
0x0	PAD[0]	SERCOM PAD[0] is used for data reception
0x1	PAD[1]	SERCOM PAD[1] is used for data reception
0x2	PAD[2]	SERCOM PAD[2] is used for data reception
0x3	PAD[3]	SERCOM PAD[3] is used for data reception

Bits 17:16 – TXPO[1:0] Transmit Data Pinout
These bits define the transmit data (TxD) and XCK pin configurations.
This bit is not synchronized.

TXPO	TxD Pin Location	XCK Pin Location (When Applicable)	RTS	CTS
0x0	SERCOM PAD[0]	SERCOM PAD[1]	N/A	N/A
0x1	SERCOM PAD[2]	SERCOM PAD[3]	N/A	N/A
0x2	SERCOM PAD[0]	N/A	SERCOM PAD[2]	SERCOM PAD[3]
0x3	Reserved			

Bits 15:13 – SAMPR[2:0] Sample Rate
These bits select the sample rate.
These bits are not synchronized.

SAMPR[2:0]	Description
0x0	16x over-sampling using arithmetic baud rate generation.
0x1	16x over-sampling using fractional baud rate generation.
0x2	8x over-sampling using arithmetic baud rate generation.
0x3	8x over-sampling using fractional baud rate generation.
0x4	3x over-sampling using arithmetic baud rate generation.
0x5-0x7	Reserved

Bit 8 – IBON Immediate Buffer Overflow Notification
This bit controls when the buffer overflow status bit (STATUS.BUFOVF) is asserted when a buffer overflow occurs.

Value	Description
0	STATUS.BUFOVF is asserted when it occurs in the data stream.
1	STATUS.BUFOVF is asserted immediately upon buffer overflow.

Downloaded from Arrow.com.

Bit 7 – RUNSTDBY Run In Standby
This bit defines the functionality in standby sleep mode.
This bit is not synchronized.

RUNSTDBY	External Clock	Internal Clock
0x0	External clock is disconnected when ongoing transfer is finished. All reception is dropped.	Generic clock is disabled when ongoing transfer is finished. The device will not wake up on either Receive Start or Transfer Complete interrupt unless the appropriate ONDEMAND bits are set in the clocking chain.
0x1	Wake on Receive Start or Receive Complete interrupt.	Generic clock is enabled in all sleep modes. Any interrupt can wake up the device.

Bits 4:2 – MODE[2:0] Operating Mode
These bits select the USART serial communication interface of the SERCOM.
These bits are not synchronized.

Value	Description
0x0	USART with external clock
0x1	USART with internal clock

Bit 1 – ENABLE Enable
Due to synchronization, there is delay from writing CTRLA.ENABLE until the peripheral is enabled/disabled. The value written to CTRLA.ENABLE will read back immediately and the Enable Synchronization Busy bit in the Synchronization Busy register (SYNCBUSY.ENABLE) will be set. SYNCBUSY.ENABLE is cleared when the operation is complete.
This bit is not enable-protected.

Value	Description
0	The peripheral is disabled or being disabled.
1	The peripheral is enabled or being enabled.

Bit 0 – SWRST Software Reset
Writing '0' to this bit has no effect.
Writing '1' to this bit resets all registers in the SERCOM, except DBGCTRL, to their initial state, and the SERCOM will be disabled.
Writing '1' to CTRLA.SWRST will always take precedence, meaning that all other writes in the same write-operation will be discarded. Any register write access during the ongoing reset will result in an APB error. Reading any register will return the reset value of the register.
Due to synchronization, there is a delay from writing CTRLA.SWRST until the reset is complete. CTRLA.SWRST and SYNCBUSY.SWRST will both be cleared when the reset is complete.
This bit is not enable-protected.

Value	Description
0	There is no reset operation ongoing.
1	The reset operation is ongoing.

Downloaded from Arrow.com.

26.8.2 Control B

Name: CTRLB
Offset: 0x04
Reset: 0x00000000
Property: PAC Write-Protection, Enable-Protected, Write-Synchronized

Bit	31	30	29	28	27	26	25	24
Access								
Reset								

Bit	23	22	21	20	19	18	17	16
							RXEN	TXEN
Access							R/W	R/W
Reset							0	0

Bit	15	14	13	12	11	10	9	8
			PMODE			ENC	SFDE	COLDEN
Access			R/W			R/W	R/W	R/W
Reset			0			0	0	0

Bit	7	6	5	4	3	2	1	0
		SBMODE				CHSIZE[2:0]		
Access		R/W				R/W	R/W	R/W
Reset		0				0	0	0

Bit 17 – RXEN Receiver Enable
Writing '0' to this bit will disable the USART receiver. Disabling the receiver will flush the receive buffer and clear the FERR, PERR and BUFOVF bits in the STATUS register.
Writing '1' to CTRLB.RXEN when the USART is disabled will set CTRLB.RXEN immediately. When the USART is enabled, CTRLB.RXEN will be cleared, and SYNCBUSY.CTRLB will be set and remain set until the receiver is enabled. When the receiver is enabled, CTRLB.RXEN will read back as '1'.
Writing '1' to CTRLB.RXEN when the USART is enabled will set SYNCBUSY.CTRLB, which will remain set until the receiver is enabled, and CTRLB.RXEN will read back as '1'.
This bit is not enable-protected.

Value	Description
0	The receiver is disabled or being enabled.
1	The receiver is enabled or will be enabled when the USART is enabled.

Bit 16 – TXEN Transmitter Enable
Writing '0' to this bit will disable the USART transmitter. Disabling the transmitter will not become effective until ongoing and pending transmissions are completed.
Writing '1' to CTRLB.TXEN when the USART is disabled will set CTRLB.TXEN immediately. When the USART is enabled, CTRLB.TXEN will be cleared, and SYNCBUSY.CTRLB will be set and remain set until the transmitter is enabled. When the transmitter is enabled, CTRLB.TXEN will read back as '1'.
Writing '1' to CTRLB.TXEN when the USART is enabled will set SYNCBUSY.CTRLB, which will remain set until the transmitter is enabled, and CTRLB.TXEN will read back as '1'.
This bit is not enable-protected.

Value	Description
0	The transmitter is disabled or being enabled.
1	The transmitter is enabled or will be enabled when the USART is enabled.

Bit 13 – PMODE Parity Mode
This bit selects the type of parity used when parity is enabled (CTRLA.FORM is '1'). The transmitter will automatically generate and send the parity of the transmitted data bits within each frame. The receiver will generate a parity value

Downloaded from Arrow.com.

for the incoming data and parity bit, compare it to the parity mode and, if a mismatch is detected, STATUS.PERR will be set.
This bit is not synchronized.

Value	Description
0	Even parity.
1	Odd parity.

Bit 10 – ENC Encoding Format
This bit selects the data encoding format.
This bit is not synchronized.

Value	Description
0	Data is not encoded.
1	Data is IrDA encoded.

Bit 9 – SFDE Start of Frame Detection Enable
This bit controls whether the start-of-frame detector will wake up the device when a start bit is detected on the RxD line.
This bit is not synchronized.

SFDE	INTENSET.RXS	INTENSET.RXC	Description
0	X	X	Start-of-frame detection disabled.
1	0	0	Reserved
1	0	1	Start-of-frame detection enabled. RXC wakes up the device from all sleep modes.
1	1	0	Start-of-frame detection enabled. RXS wakes up the device from all sleep modes.
1	1	1	Start-of-frame detection enabled. Both RXC and RXS wake up the device from all sleep modes.

Bit 8 – COLDEN Collision Detection Enable
This bit enables collision detection.
This bit is not synchronized.

Value	Description
0	Collision detection is not enabled.
1	Collision detection is enabled.

Bit 6 – SBMODE Stop Bit Mode
This bit selects the number of stop bits transmitted.
This bit is not synchronized.

Value	Description
0	One stop bit.
1	Two stop bits.

Bits 2:0 – CHSIZE[2:0] Character Size
These bits select the number of bits in a character.
These bits are not synchronized.

CHSIZE[2:0]	Description
0x0	8 bits
0x1	9 bits
0x2-0x4	Reserved
0x5	5 bits
0x6	6 bits
0x7	7 bits

Downloaded from Arrow.com.

26.8.3 Baud

Name: BAUD
Offset: 0x0C
Reset: 0x0000
Property: Enable-Protected, PAC Write-Protection

Bit	15	14	13	12	11	10	9	8
	BAUD[15:8]							
Access	R/W	R/W	R/W	R/W	R/W	R/W	R/W	R/W
Reset	0	0	0	0	0	0	0	0

Bit	7	6	5	4	3	2	1	0
	BAUD[7:0]							
Access	R/W	R/W	R/W	R/W	R/W	R/W	R/W	R/W
Reset	0	0	0	0	0	0	0	0

Bits 15:0 – BAUD[15:0] Baud Value
Arithmetic Baud Rate Generation (`CTRLA.SAMPR[0]=0`):
These bits control the clock generation, as described in the SERCOM Baud Rate section.
If Fractional Baud Rate Generation (`CTRLA.SAMPR[0]=1`) bit positions 15 to 13 are replaced by FP[2:0] Fractional Part:

- **Bits 15:13 - FP[2:0]: Fractional Part**

  These bits control the clock generation, as described in the *SERCOM Clock Generation – Baud-Rate Generator* section.
- **Bits 12:0 - BAUD[12:0]: Baud Value**

  These bits control the clock generation, as described in the *SERCOM Clock Generation – Baud-Rate Generator* section.

Related Links
25.6.2.3 Clock Generation – Baud-Rate Generator
25.6.2.3.1 Asynchronous Arithmetic Mode BAUD Value Selection

Downloaded from Arrow.com.

26.8.4 Receive Pulse Length Register

Name: RXPL
Offset: 0x0E
Reset: 0x00
Property: Enable-Protected, PAC Write-Protection

Bit	7	6	5	4	3	2	1	0
	RXPL[7:0]							
Access	R/W	R/W	R/W	R/W	R/W	R/W	R/W	R/W
Reset	0	0	0	0	0	0	0	0

Bits 7:0 – RXPL[7:0] Receive Pulse Length
When the encoding format is set to IrDA (CTRLB.ENC=1), these bits control the minimum pulse length that is required for a pulse to be accepted by the IrDA receiver with regards to the serial engine clock period SE_{per}.

$$PULSE \geq \left(\mathrm{RXPL} + 2\right) \cdot SE_{per}$$

Downloaded from Arrow.com.

26.8.5 Interrupt Enable Clear

Name: INTENCLR
Offset: 0x14
Reset: 0x00
Property: PAC Write-Protection

This register allows the user to disable an interrupt without doing a read-modify-write operation. Changes in this register will also be reflected in the Interrupt Enable Set register (INTENSET).

Bit	7	6	5	4	3	2	1	0
	ERROR		RXBRK	CTSIC	RXS	RXC	TXC	DRE
Access	R/W		R/W	R/W	R/W	R/W	R/W	R/W
Reset	0		0	0	0	0	0	0

Bit 7 – ERROR Error Interrupt Enable
Writing '0' to this bit has no effect.
Writing '1' to this bit will clear the Error Interrupt Enable bit, which disables the Error interrupt.

Value	Description
0	Error interrupt is disabled.
1	Error interrupt is enabled.

Bit 5 – RXBRK Receive Break Interrupt Enable
Writing '0' to this bit has no effect.
Writing '1' to this bit will clear the Receive Break Interrupt Enable bit, which disables the Receive Break interrupt.

Value	Description
0	Receive Break interrupt is disabled.
1	Receive Break interrupt is enabled.

Bit 4 – CTSIC Clear to Send Input Change Interrupt Enable
Writing '0' to this bit has no effect.
Writing '1' to this bit will clear the Clear To Send Input Change Interrupt Enable bit, which disables the Clear To Send Input Change interrupt.

Value	Description
0	Clear To Send Input Change interrupt is disabled.
1	Clear To Send Input Change interrupt is enabled.

Bit 3 – RXS Receive Start Interrupt Enable
Writing '0' to this bit has no effect.
Writing '1' to this bit will clear the Receive Start Interrupt Enable bit, which disables the Receive Start interrupt.

Value	Description
0	Receive Start interrupt is disabled.
1	Receive Start interrupt is enabled.

Bit 2 – RXC Receive Complete Interrupt Enable
Writing '0' to this bit has no effect.
Writing '1' to this bit will clear the Receive Complete Interrupt Enable bit, which disables the Receive Complete interrupt.

Value	Description
0	Receive Complete interrupt is disabled.
1	Receive Complete interrupt is enabled.

Bit 1 – TXC Transmit Complete Interrupt Enable
Writing '0' to this bit has no effect.
Writing '1' to this bit will clear the Transmit Complete Interrupt Enable bit, which disables the Receive Complete interrupt.

Downloaded from Arrow.com.

Value	Description
0	Transmit Complete interrupt is disabled.
1	Transmit Complete interrupt is enabled.

Bit 0 – DRE Data Register Empty Interrupt Enable
Writing '0' to this bit has no effect.
Writing '1' to this bit will clear the Data Register Empty Interrupt Enable bit, which disables the Data Register Empty interrupt.

Value	Description
0	Data Register Empty interrupt is disabled.
1	Data Register Empty interrupt is enabled.

Downloaded from Arrow.com.

26.8.6 Interrupt Enable Set

Name: INTENSET
Offset: 0x16
Reset: 0x00
Property: PAC Write-Protection

This register allows the user to disable an interrupt without doing a read-modify-write operation. Changes in this register will also be reflected in the Interrupt Enable Clear register (INTENCLR).

Bit	7	6	5	4	3	2	1	0
	ERROR		RXBRK	CTSIC	RXS	RXC	TXC	DRE
Access	R/W		R/W	R/W	R/W	R/W	R/W	R/W
Reset	0		0	0	0	0	0	0

Bit 7 – ERROR Error Interrupt Enable
Writing '0' to this bit has no effect.
Writing '1' to this bit will set the Error Interrupt Enable bit, which enables the Error interrupt.

Value	Description
0	Error interrupt is disabled.
1	Error interrupt is enabled.

Bit 5 – RXBRK Receive Break Interrupt Enable
Writing '0' to this bit has no effect.
Writing '1' to this bit will set the Receive Break Interrupt Enable bit, which enables the Receive Break interrupt.

Value	Description
0	Receive Break interrupt is disabled.
1	Receive Break interrupt is enabled.

Bit 4 – CTSIC Clear to Send Input Change Interrupt Enable
Writing '0' to this bit has no effect.
Writing '1' to this bit will set the Clear To Send Input Change Interrupt Enable bit, which enables the Clear To Send Input Change interrupt.

Value	Description
0	Clear To Send Input Change interrupt is disabled.
1	Clear To Send Input Change interrupt is enabled.

Bit 3 – RXS Receive Start Interrupt Enable
Writing '0' to this bit has no effect.
Writing '1' to this bit will set the Receive Start Interrupt Enable bit, which enables the Receive Start interrupt.

Value	Description
0	Receive Start interrupt is disabled.
1	Receive Start interrupt is enabled.

Bit 2 – RXC Receive Complete Interrupt Enable
Writing '0' to this bit has no effect.
Writing '1' to this bit will set the Receive Complete Interrupt Enable bit, which enables the Receive Complete interrupt.

Value	Description
0	Receive Complete interrupt is disabled.
1	Receive Complete interrupt is enabled.

Bit 1 – TXC Transmit Complete Interrupt Enable
Writing '0' to this bit has no effect.
Writing '1' to this bit will set the Transmit Complete Interrupt Enable bit, which enables the Transmit Complete interrupt.

Downloaded from Arrow.com.

Value	Description
0	Transmit Complete interrupt is disabled.
1	Transmit Complete interrupt is enabled.

Bit 0 – DRE Data Register Empty Interrupt Enable
Writing '0' to this bit has no effect.
Writing '1' to this bit will set the Data Register Empty Interrupt Enable bit, which enables the Data Register Empty interrupt.

Value	Description
0	Data Register Empty interrupt is disabled.
1	Data Register Empty interrupt is enabled.

Downloaded from Arrow.com.

26.8.7 Interrupt Flag Status and Clear

Name: INTFLAG
Offset: 0x18
Reset: 0x00
Property: -

Bit	7	6	5	4	3	2	1	0
	ERROR		RXBRK	CTSIC	RXS	RXC	TXC	DRE
Access	R/W		R/W	R/W	R/W	R	R/W	R
Reset	0		0	0	0	0	0	0

Bit 7 – ERROR Error
This flag is cleared by writing '1' to it.
This bit is set when any error is detected. Errors that will set this flag have corresponding status flags in the STATUS register. Errors that will set this flag are COLL, ISF, BUFOVF, FERR, and PERR.Writing '0' to this bit has no effect.
Writing '1' to this bit will clear the flag.

Bit 5 – RXBRK Receive Break
This flag is cleared by writing '1' to it.
This flag is set when auto-baud is enabled (CTRLA.FORM) and a break character is received.
Writing '0' to this bit has no effect.
Writing '1' to this bit will clear the flag.

Bit 4 – CTSIC Clear to Send Input Change
This flag is cleared by writing a '1' to it.
This flag is set when a change is detected on the CTS pin.
Writing '0' to this bit has no effect.
Writing '1' to this bit will clear the flag.

Bit 3 – RXS Receive Start
This flag is cleared by writing '1' to it.
This flag is set when a start condition is detected on the RxD line and start-of-frame detection is enabled (CTRLB.SFDE is '1').
Writing '0' to this bit has no effect.
Writing '1' to this bit will clear the Receive Start interrupt flag.

Bit 2 – RXC Receive Complete
This flag is cleared by reading the Data register (DATA) or by disabling the receiver.
This flag is set when there are unread data in DATA.
Writing '0' to this bit has no effect.
Writing '1' to this bit has no effect.

Bit 1 – TXC Transmit Complete
This flag is cleared by writing '1' to it or by writing new data to DATA.
This flag is set when the entire frame in the transmit shift register has been shifted out and there are no new data in DATA.
Writing '0' to this bit has no effect.
Writing '1' to this bit will clear the flag.

Bit 0 – DRE Data Register Empty
This flag is cleared by writing new data to DATA.
This flag is set when DATA is empty and ready to be written.
Writing '0' to this bit has no effect.
Writing '1' to this bit has no effect.

Downloaded from Arrow.com.

26.8.8 Status

Name: STATUS
Offset: 0x1A
Reset: 0x0000
Property: -

Bit	15	14	13	12	11	10	9	8
Access								
Reset								

Bit	7	6	5	4	3	2	1	0
		TXE	COLL	ISF	CTS	BUFOVF	FERR	PERR
Access		R/W	R/W	R/W	R	R/W	R/W	R/W
Reset		0	0	0	0	0	0	0

Bit 6 – TXE Transmitter Empty
This bit will always read back as zero.
Writing '0' to this bit has no effect.
Writing '1' to this bit will clear it.

Bit 5 – COLL Collision Detected
This bit is cleared by writing '1' to the bit or by disabling the receiver.
This bit is set when collision detection is enabled (CTRLB.COLDEN) and a collision is detected.
Writing '0' to this bit has no effect.
Writing '1' to this bit will clear it.

Bit 4 – ISF Inconsistent Sync Field
This bit is cleared by writing '1' to the bit or by disabling the receiver.
This bit is set when the frame format is set to auto-baud (CTRLA.FORM) and a sync field not equal to 0x55 is received.
Writing '0' to this bit has no effect.
Writing '1' to this bit will clear it.

Bit 3 – CTS Clear to Send
This bit indicates the current level of the CTS pin when flow control is enabled (CTRLA.TXPO).
Writing '0' to this bit has no effect.
Writing '1' to this bit has no effect.

Bit 2 – BUFOVF Buffer Overflow
Reading this bit before reading the Data register will indicate the error status of the next character to be read.
This bit is cleared by writing '1' to the bit or by disabling the receiver.
This bit is set when a buffer overflow condition is detected. A buffer overflow occurs when the receive buffer is full, there is a new character waiting in the receive shift register and a new start bit is detected.
Writing '0' to this bit has no effect.
Writing '1' to this bit will clear it.

Bit 1 – FERR Frame Error
Reading this bit before reading the Data register will indicate the error status of the next character to be read.
This bit is cleared by writing '1' to the bit or by disabling the receiver.
This bit is set if the received character had a frame error, i.e., when the first stop bit is zero.
Writing '0' to this bit has no effect.
Writing '1' to this bit will clear it.

Downloaded from Arrow.com.

Bit 0 – PERR Parity Error
Reading this bit before reading the Data register will indicate the error status of the next character to be read.
This bit is cleared by writing '1' to the bit or by disabling the receiver.
This bit is set if parity checking is enabled (CTRLA.FORM is 0x1, 0x5) and a parity error is detected.
Writing '0' to this bit has no effect.
Writing '1' to this bit will clear it.

Downloaded from Arrow.com.

26.8.9 Synchronization Busy

Name: SYNCBUSY
Offset: 0x1C
Reset: 0x00000000
Property: -

Bit	31	30	29	28	27	26	25	24
Access								
Reset								

Bit	23	22	21	20	19	18	17	16
Access								
Reset								

Bit	15	14	13	12	11	10	9	8
Access								
Reset								

Bit	7	6	5	4	3	2	1	0
						CTRLB	ENABLE	SWRST
Access						R	R	R
Reset						0	0	0

Bit 2 – CTRLB CTRLB Synchronization Busy
Writing to the CTRLB register when the SERCOM is enabled requires synchronization. When writing to CTRLB the SYNCBUSY.CTRLB bit will be set until synchronization is complete. If CTRLB is written while SYNCBUSY.CTRLB is asserted, an APB error will be generated.

Value	Description
0	CTRLB synchronization is not busy.
1	CTRLB synchronization is busy.

Bit 1 – ENABLE SERCOM Enable Synchronization Busy
Enabling and disabling the SERCOM (CTRLA.ENABLE) requires synchronization. When written, the SYNCBUSY.ENABLE bit will be set until synchronization is complete.

Value	Description
0	Enable synchronization is not busy.
1	Enable synchronization is busy.

Bit 0 – SWRST Software Reset Synchronization Busy
Resetting the SERCOM (CTRLA.SWRST) requires synchronization. When written, the SYNCBUSY.SWRST bit will be set until synchronization is complete.

Value	Description
0	SWRST synchronization is not busy.
1	SWRST synchronization is busy.

Downloaded from Arrow.com.

26.8.10 Data

Name: DATA
Offset: 0x28
Reset: 0x0000
Property: -

Bit	15	14	13	12	11	10	9	8
								DATA[8]
Access								R/W
Reset								0

Bit	7	6	5	4	3	2	1	0
	DATA[7:0]							
Access	R/W	R/W	R/W	R/W	R/W	R/W	R/W	R/W
Reset	0	0	0	0	0	0	0	0

Bits 8:0 – DATA[8:0] Data
Reading these bits will return the contents of the Receive Data register. The register should be read only when the Receive Complete Interrupt Flag bit in the Interrupt Flag Status and Clear register (INTFLAG.RXC) is set. The status bits in STATUS should be read before reading the DATA value in order to get any corresponding error.
Writing these bits will write the Transmit Data register. This register should be written only when the Data Register Empty Interrupt Flag bit in the Interrupt Flag Status and Clear register (INTFLAG.DRE) is set.

Downloaded from Arrow.com.

26.8.11 Debug Control

Name: DBGCTRL
Offset: 0x30
Reset: 0x00
Property: PAC Write-Protection

Bit	7	6	5	4	3	2	1	0
								DBGSTOP
Access								R/W
Reset								0

Bit 0 – DBGSTOP Debug Stop Mode
This bit controls the baud-rate generator functionality when the CPU is halted by an external debugger.

Value	Description
0	The baud-rate generator continues normal operation when the CPU is halted by an external debugger.
1	The baud-rate generator is halted when the CPU is halted by an external debugger.

Downloaded from Arrow.com.

27. SERCOM SPI – SERCOM Serial Peripheral Interface

27.1 Overview

The Serial Peripheral Interface (SPI) is one of the available modes in the Serial Communication Interface (SERCOM).

The SPI uses the SERCOM transmitter and receiver configured as shown in 27.3 Block Diagram. Each side, host and client, depicts a separate SPI containing a Shift register, a transmit buffer and a two-level receive buffer. In addition, the SPI host uses the SERCOM baud-rate generator, while the SPI client can use the SERCOM address match logic. Labels in capital letters are synchronous to CLK_SERCOMx_APB and accessible by the CPU, while labels in lowercase letters are synchronous to the SCK clock.

Related Links

25. SERCOM – Serial Communication Interface

27.2 Features

SERCOM SPI includes the following features:

- Full-duplex, four-wire interface (MISO, MOSI, SCK, $\overline{SS}$)
- One-level transmit buffer, two-level receive buffer
- Supports all four SPI modes of operation
- Single data direction operation allows alternate function on MISO or MOSI pin
- Selectable LSB- or MSB-first data transfer
- Can be used with DMA
- Host operation:
  - Serial clock speed, $f_{SCK}=1/t_{SCK}$(1)
  - 8-bit clock generator
  - Hardware controlled $\overline{SS}$
- Client Operation:
  - Serial clock speed, $f_{SCK}=1/t_{SSCK}$(1)
  - Optional 8-bit address match operation
  - Operation in all sleep modes
  - Wake on $\overline{SS}$ transition

1. For t_{SCK} and t_{SSCK} values, refer to SPI Timing Characteristics.

Related Links

37.16.2 SERCOM in SPI Mode Timing
25. SERCOM – Serial Communication Interface
25.2 Features

Downloaded from Arrow.com.

27.3 Block Diagram

Figure 27-1. Full-Duplex SPI Host Client Interconnection

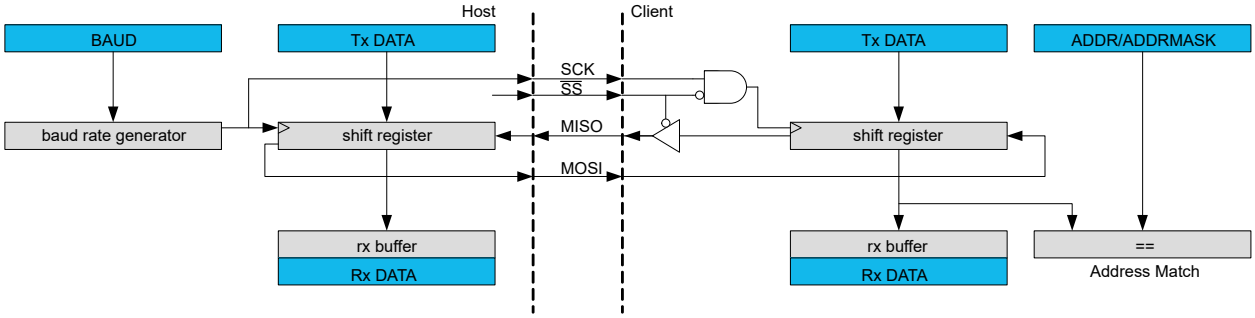

27.4 Signal Description

Table 27-1. SERCOM SPI Signals

Signal Name	Type	Description
PAD[3:0]	Digital I/O	General SERCOM pins

One signal can be mapped to one of several pins.

Related Links

7. I/O Multiplexing and Considerations

27.5 Product Dependencies

In order to use this peripheral, other parts of the system must be configured correctly, as described below.

27.5.1 I/O Lines

In order to use the SERCOM's I/O lines, the I/O pins must be configured using the IO Pin Controller (PORT).

When the SERCOM is configured for SPI operation, the SERCOM controls the direction and value of the I/O pins according to the table below. PORT Control bit PINCFGn.DRVSTR is still effective for the SERCOM output pins. PORT Control bit PINCFGn.PULLEN is still effective on the SERCOM input pins, but is limited to the enabling/disabling of a pull down only (it is not possible to enable/disable a pull up). If the receiver is disabled, the data input pin can be used for other purposes. In Host mode, the SPI Select line ($\overline{SS}$) is hardware controlled when the Host SPI Select Enable bit in the Control B register (CTRLB.MSSEN) is '1'.

Table 27-2. SPI Pin Configuration

Pin	Host SPI	Client SPI
MOSI	Output	Input
MISO	Input	Output
SCK	Output	Input
$\overline{SS}$	Output (CTRLB.MSSEN=1)	Input

The combined configuration of PORT, the Data In Pinout and the Data Out Pinout bit groups in the Control A register (CTRLA.DIPO and CTRLA.DOPO) define the physical position of the SPI signals in the table above.

Related Links

23. PORT - I/O Pin Controller

Downloaded from Arrow.com.

27.5.2 Power Management

This peripheral can continue to operate in any sleep mode where its source clock is running. The interrupts can wake up the device from sleep modes.

Related Links

16. PM – Power Manager

27.5.3 Clocks

The SERCOM bus clock (CLK_SERCOMx_APB) can be enabled and disabled in the Power Manager. Refer to *Peripheral Clock Masking* for details and default status of this clock.

A generic clock (GCLK_SERCOMx_CORE) is required to clock the SPI. This clock must be configured and enabled in the Generic Clock Controller before using the SPI.

This generic clock is asynchronous to the bus clock (CLK_SERCOMx_APB). Therefore, writes to certain registers will require synchronization to the clock domains.

Related Links

15. GCLK - Generic Clock Controller
16.6.2.6 Peripheral Clock Masking
27.6.6 Synchronization

27.5.4 DMA

The DMA request lines are connected to the DMA Controller (DMAC). In order to use DMA requests with this peripheral the DMAC must be configured first. Refer to *DMAC – Direct Memory Access Controller* for details.

Related Links

20. DMAC – Direct Memory Access Controller

27.5.5 Interrupts

The interrupt request line is connected to the Interrupt Controller. In order to use interrupt requests of this peripheral, the Interrupt Controller (NVIC) must be configured first. Refer to *Nested Vector Interrupt Controller* for details.

Related Links

11.2 Nested Vector Interrupt Controller

27.5.6 Events

Not applicable.

27.5.7 Debug Operation

When the CPU is halted in debug mode, this peripheral will continue normal operation. If the peripheral is configured to require periodical service by the CPU through interrupts or similar, improper operation or data loss may result during debugging. This peripheral can be forced to halt operation during debugging - refer to the Debug Control (DBGCTRL) register for details.

27.5.8 Register Access Protection

Registers with write-access can be write-protected optionally by the peripheral access controller (PAC).

PAC Write-Protection is not available for the following registers:

- Interrupt Flag Clear and Status register (INTFLAG)
- Status register (STATUS)
- Data register (DATA)

Optional PAC Write-Protection is denoted by the "PAC Write-Protection" property in each individual register description.

Write-protection does not apply to accesses through an external debugger.

Related Links

11.6 Peripheral Access Controller (PAC)

Downloaded from Arrow.com.

27.5.9 Analog Connections

Not applicable.

27.6 Functional Description

27.6.1 Principle of Operation

The SPI is a high-speed synchronous data transfer interface. It allows high-speed communication between the device and peripheral devices.

The SPI can operate as host or client. As host, the SPI initiates and controls all data transactions. The SPI is single buffered for transmitting and double buffered for receiving.

When transmitting data, the Data register can be loaded with the next character to be transmitted during the current transmission.

When receiving, the data is transferred to the two-level receive buffer, and the receiver is ready for a new character.

The SPI transaction format is shown in SPI Transaction Format. Each transaction can contain one or more characters. The character size is configurable, and can be either 8 or 9 bits.

Figure 27-2. SPI Transaction Format

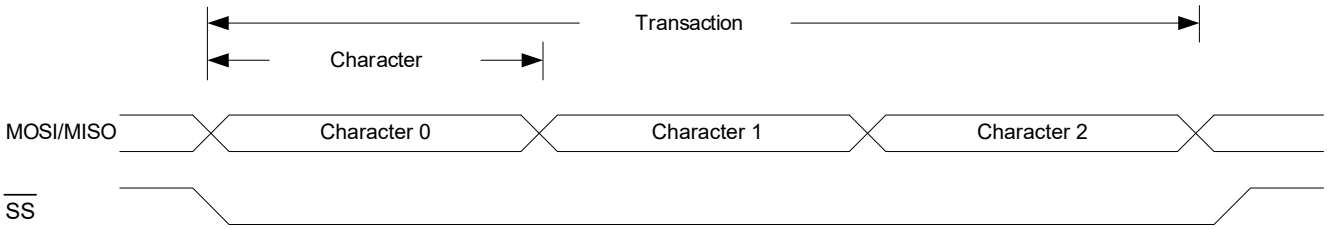

The SPI host must pull the SPI select line ($\overline{SS}$) of the desired client low to initiate a transaction if multiple clients are connected to the bus. The SPI select line can be wired low if there is only one SPI client on the bus. The host and client prepare data to send via their respective Shift registers, and the host generates the serial clock on the SCK line.

Data is always shifted from host to client on the Host Output Client Input line (MOSI); data is shifted from client to host on the Host Input Client Output line (MISO).

Each time character is shifted out from the host, a character will be shifted out from the client simultaneously. To signal the end of a transaction, the host will pull the $\overline{SS}$ line high.

27.6.2 Basic Operation

27.6.2.1 Initialization

The following registers are enable-protected, meaning that they can only be written when the SPI is disabled (CTRL.ENABLE=0):

- Control A register (CTRLA), except Enable (CTRLA.ENABLE) and Software Reset (CTRLA.SWRST)
- Control B register (CTRLB), except Receiver Enable (CTRLB.RXEN)
- Baud register (BAUD)
- Address register (ADDR)

When the SPI is enabled or is being enabled (CTRLA.ENABLE=1), any writing to these registers will be discarded.

When the SPI is being disabled, writing to these registers will be completed after the disabling.

Enable-protection is denoted by the Enable-Protection property in the register description.

Initialize the SPI by following these steps:

1. Select SPI mode in host/client operation in the Operating Mode bit group in the CTRLA register (CTRLA.MODE= 0x2 or 0x3).
2. Select Transfer mode for the Clock Polarity bit and the Clock Phase bit in the CTRLA register (CTRLA.CPOL and CTRLA.CPHA) if desired.

Downloaded from Arrow.com.

3. Select the Frame Format value in the CTRLA register (CTRLA.FORM).
4. Configure the Data In Pinout field in the Control A register (CTRLA.DIPO) for SERCOM pads of the receiver.
5. Configure the Data Out Pinout bit group in the Control A register (CTRLA.DOPO) for SERCOM pads of the transmitter.
6. Select the Character Size value in the CTRLB register (CTRLB.CHSIZE).
7. Write the Data Order bit in the CTRLA register (CTRLA.DORD) for data direction.
8. If the SPI is used in Host mode:
   a. Select the desired baud rate by writing to the Baud register (BAUD).
   b. If Hardware $\overline{SS}$ control is required, write '1' to the Host SPI Select Enable bit in CTRLB register (CTRLB.MSSEN).
9. Enable the receiver by writing the Receiver Enable bit in the CTRLB register (CTRLB.RXEN=1).

27.6.2.2 Enabling, Disabling, and Resetting

This peripheral is enabled by writing '1' to the Enable bit in the Control A register (CTRLA.ENABLE), and disabled by writing '0' to it.

Writing ‘1’ to the Software Reset bit in the Control A register (CTRLA.SWRST) will reset all registers of this peripheral to their initial states, except the DBGCTRL register, and the peripheral is disabled.

Refer to the CTRLA register description for details.

27.6.2.3 Clock Generation

In the SPI host operation (CTRLA.MODE=0x3), the serial clock (SCK) is generated internally by the SERCOM Baud Rate Generator (BRG).

In SPI mode, the BRG is set to Synchronous mode. The 8-bit Baud register (BAUD) value is used for generating SCK and clocking the Shift register. Refer to *Clock Generation – Baud-Rate Generator* for more details.

In SPI client operation (CTRLA.MODE is 0x2), the clock is provided by an external host on the SCK pin. This clock is used to clock the SPI Shift register.

Related Links

25.6.2.3 Clock Generation – Baud-Rate Generator

27.6.2.4 Data Register

The SPI Transmit Data register (TxDATA) and SPI Receive Data register (RxDATA) share the same I/O address, referred to as the SPI Data register (DATA). Writing DATA register will update the Transmit Data register. Reading the DATA register will return the contents of the Receive Data register.

27.6.2.5 SPI Transfer Modes

There are four combinations of SCK phase and polarity to transfer serial data. The SPI data transfer modes are shown in SPI Transfer Modes (Table) and SPI Transfer Modes (Figure).

SCK phase is configured by the Clock Phase bit in the CTRLA register (CTRLA.CPHA). SCK polarity is programmed by the Clock Polarity bit in the CTRLA register (CTRLA.CPOL). Data bits are shifted out and latched in on opposite edges of the SCK signal. This ensures sufficient time for the data signals to stabilize.

Table 27-3. SPI Transfer Modes

Mode	CPOL	CPHA	Leading Edge	Trailing Edge
0	0	0	Rising, sample	Falling, setup
1	0	1	Rising, setup	Falling, sample
2	1	0	Falling, sample	Rising, setup
3	1	1	Falling, setup	Rising, sample

Note:
Leading edge is the first clock edge in a clock cycle.

Trailing edge is the second clock edge in a clock cycle.

Downloaded from Arrow.com.

Figure 27-3. SPI Transfer Modes

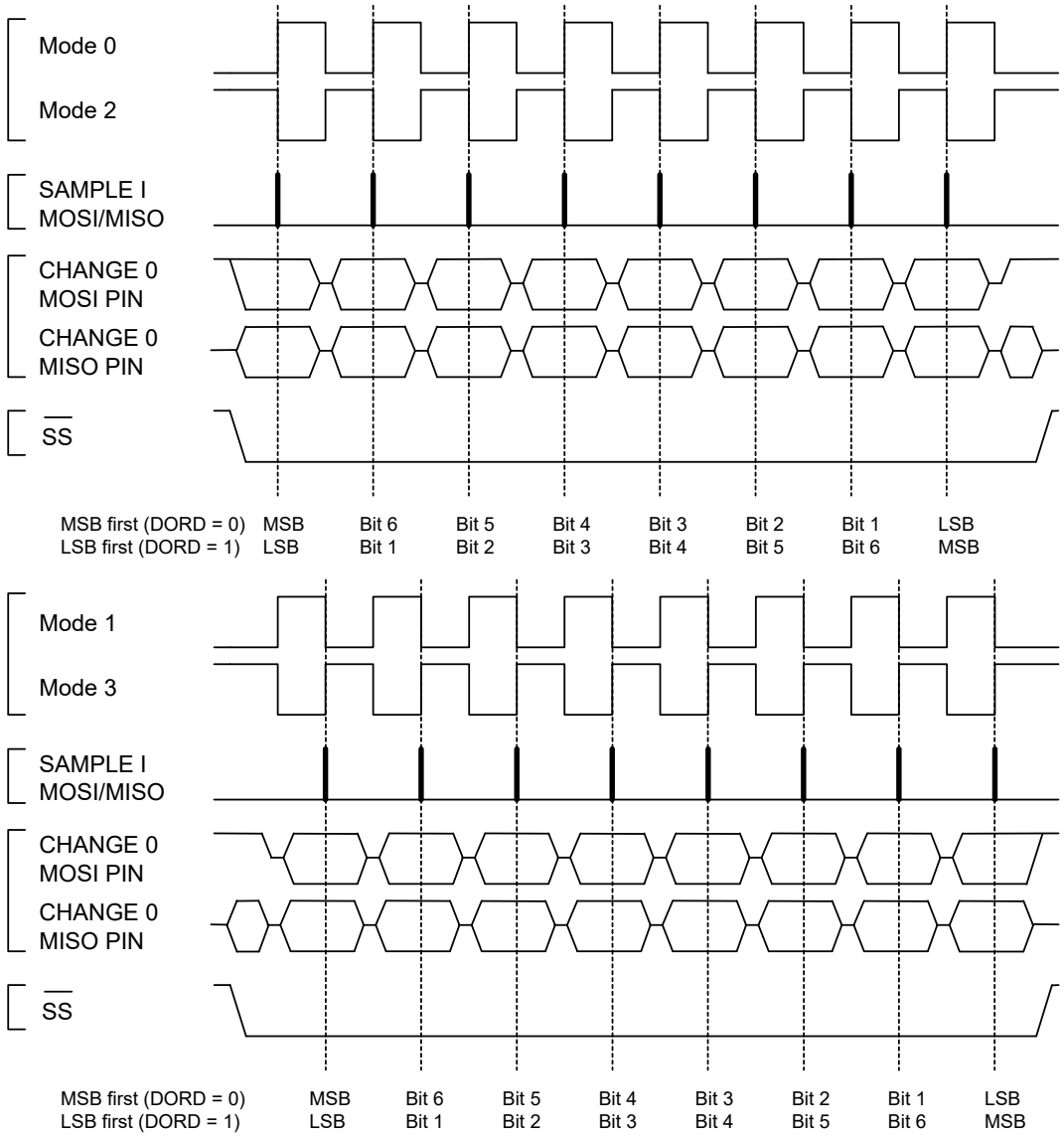

27.6.2.6 Transferring Data

27.6.2.6.1 Host

In host mode (CTRLA.MODE=0x3), when Host SPI Enable Select (CTRLB.MSSEN) is '1', hardware will control the $\overline{SS}$ line.

When Host SPI Select Enable (CTRLB.MSSEN) is '0', the $\overline{SS}$ line must be configured as an output. $\overline{SS}$ can be assigned to any general purpose I/O pin. When the SPI is ready for a data transaction, software must pull the $\overline{SS}$ line low.

When writing a character to the Data register (DATA), the character will be transferred to the shift register. Once the content of TxDATA has been transferred to the shift register, the Data Register Empty flag in the Interrupt Flag Status and Clear register (INTFLAG.DRE) will be set. And a new character can be written to DATA.

Each time one character is shifted out from the host, another character will be shifted in from the client simultaneously. If the receiver is enabled (CTRLA.RXEN=1), the contents of the shift register will be transferred to the two-level receive buffer. The transfer takes place in the same clock cycle as the last data bit is shifted in. And the Receive Complete Interrupt flag in the Interrupt Flag Status and Clear register (INTFLAG.RXC) will be set. The received data can be retrieved by reading DATA.

Downloaded from Arrow.com.

When the last character has been transmitted and there is no valid data in DATA, the Transmit Complete Interrupt flag in the Interrupt Flag Status and Clear register (INTFLAG.TXC) will be set. When the transaction is finished, the host must pull the $\overline{SS}$ line high to notify the client. If Host SPI Select Enable (CTRLB.MSSEN) is set to '0', the software must pull the $\overline{SS}$ line high.

27.6.2.6.2 Client

In Client mode (CTRLA.MODE=0x2), the SPI interface will remain inactive with the MISO line tri-stated as long as the $\overline{SS}$ pin is pulled high. Software may update the contents of DATA at any time as long as the Data Register Empty flag in the Interrupt Status and Clear register (INTFLAG.DRE) is set.

When $\overline{SS}$ is pulled low and SCK is running, the client will sample and shift out data according to the Transaction mode set. When the content of TxDATA has been loaded into the Shift register, INTFLAG.DRE will be set, and new data can be written to DATA.

Similar to the host, the client will receive one character for each character transmitted. A character will be transferred into the two-level receive buffer within the same clock cycle its last data bit is received. The received character can be retrieved from DATA when the Receive Complete interrupt flag (INTFLAG.RXC) is set.

When the host pulls the $\overline{SS}$ line high, the transaction is done and the Transmit Complete Interrupt flag in the Interrupt Flag Status and Clear register (INTFLAG.TXC) will be set.

After DATA is written it takes up to three SCK clock cycles until the content of DATA is ready to be loaded into the Shift register on the next character boundary. As a consequence, the first character transferred in a SPI transaction will not be the content of DATA. This can be avoided by using the preloading feature. Refer to 27.6.3.2 Preloading of the Client Shift Register.

When transmitting several characters in one SPI transaction, the data has to be written into DATA register with at least three SCK clock cycles left in the current character transmission. If this criteria is not met, the previously received character will be transmitted.

Once the DATA register is empty, it takes three CLK_SERCOM_APB cycles for INTFLAG.DRE to be set.

27.6.2.7 Receiver Error Bit

The SPI receiver has one error bit: the Buffer Overflow bit (BUFOVF), which can be read from the Status register (STATUS). Once an error happens, the bit will stay set until it is cleared by writing '1' to it. The bit is also automatically cleared when the receiver is disabled.

There are two methods for buffer overflow notification, selected by the immediate buffer overflow notification bit in the Control A register (CTRLA.IBON):

If CTRLA.IBON=1, STATUS.BUFOVF is raised immediately upon buffer overflow. Software can then empty the receive FIFO by reading RxDATA until the receiver complete interrupt flag in the Interrupt Flag Status and Clear register (INTFLAG.RXC) goes low.

If CTRLA.IBON=0, the buffer overflow condition travels with data through the receive FIFO. After the received data is read, STATUS.BUFOVF and INTFLAG.ERROR will be set along with INTFLAG.RXC, and RxDATA will be zero.

27.6.3 Additional Features

27.6.3.1 Address Recognition

When the SPI is configured for client operation (CTRLA.MODE=0x2) with address recognition (CTRLA.FORM is 0x2), the SERCOM address recognition logic is enabled: the first character in a transaction is checked for an address match.

If there is a match, the Receive Complete Interrupt flag in the Interrupt Flag Status and Clear register (INTFLAG.RXC) is set, the MISO output is enabled, and the transaction is processed. If the device is in Sleep mode, an address match can wake-up the device in order to process the transaction.

If there is no match, the complete transaction is ignored.

If a 9-bit frame format is selected, only the lower 8 bits of the Shift register are checked against the Address register (ADDR).

Preload must be disabled (CTRLB.PLOADEN=0) in order to use this mode.

Downloaded from Arrow.com.

Related Links

25.6.3.1 Address Match and Mask

27.6.3.2 Preloading of the Client Shift Register

When starting a transaction, the client will first transmit the contents of the shift register before loading new data from DATA. The first character sent can be either the reset value of the shift register (if this is the first transmission since the last reset) or the last character in the previous transmission.

Preloading can be used to preload data into the shift register while $\overline{SS}$ is high: this eliminates sending a dummy character when starting a transaction. If the shift register is not preloaded, the current contents of the shift register will be shifted out.

Only one data character will be preloaded into the shift register while the synchronized $\overline{SS}$ signal is high. If the next character is written to DATA before $\overline{SS}$ is pulled low, the second character will be stored in DATA until transfer begins.

For proper preloading, sufficient time must elapse between $\overline{SS}$ going low and the first SCK sampling edge, as in Timing Using Preloading. See also the *Electrical Characteristics* chapters for timing details.

Preloading is enabled by writing '1' to the Client Data Preload Enable bit in the CTRLB register (CTRLB.PLOADEN).

Figure 27-4. Timing Using Preloading

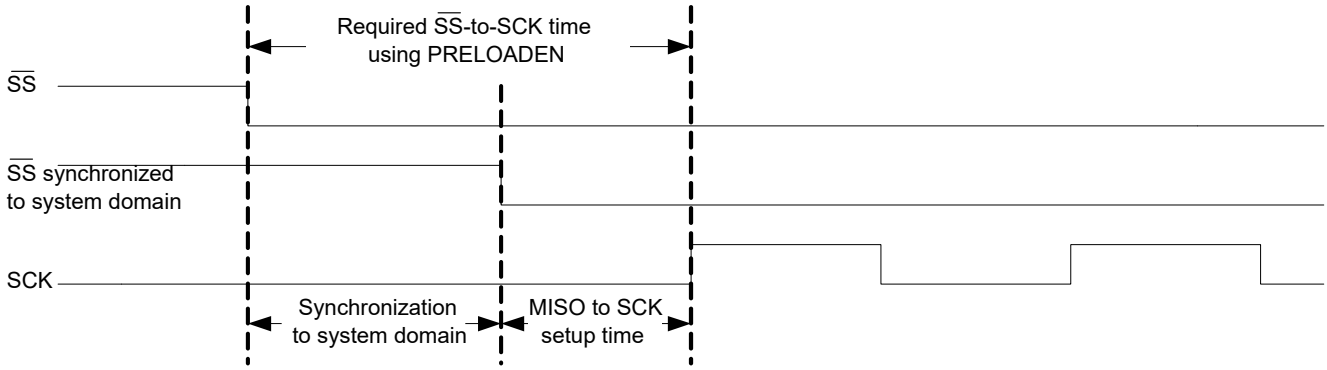

Related Links

37. Electrical Characteristics at 85°C

27.6.3.3 Host with Several Clients

Host with multiple clients in parallel is only available when Host SPI Select Enable (CTRLB.MSSEN) is set to zero and hardware $\overline{SS}$ control is disabled. If the bus consists of several SPI clients, a SPI host can use general purpose I/O pins to control the $\overline{SS}$ line to each of the clients on the bus, as shown in the following figure. In this configuration, the single selected SPI client will drive the tri-state MISO line.

Figure 27-5. Multiple Clients in Parallel

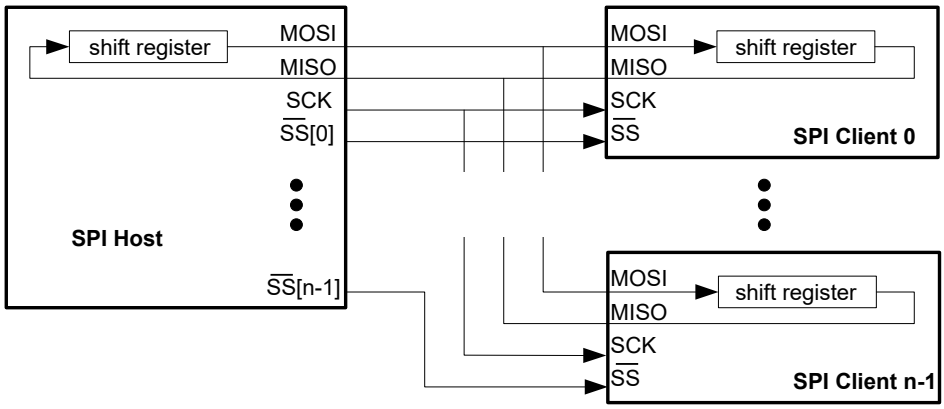

Another configuration is multiple clients in series, as shown in the following figure. In this configuration, all n attached clients are connected in series. A common $\overline{SS}$ line is provided to all clients, enabling them simultaneously. The host

Downloaded from Arrow.com.

must shift n characters for a complete transaction. Depending on the Host SPI Select Enable bit (CTRLB.MSSEN), the $\overline{SS}$ line can be controlled either by hardware or user software and normal GPIO.

Figure 27-6. Multiple Clients in Series

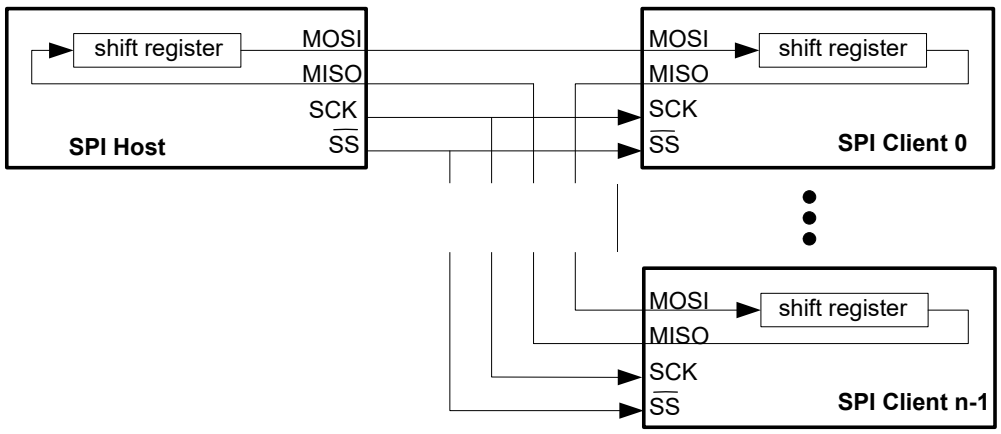

27.6.3.4 Loop-Back Mode

For loop-back mode, configure the Data In Pinout (CTRLA.DIPO) and Data Out Pinout (CTRLA.DOPO) to use the same data pins for transmit and receive. The loop-back is through the pad, so the signal is also available externally.

27.6.3.5 Hardware Controlled $\overline{SS}$

In Host mode, a single $\overline{SS}$ chip select can be controlled by hardware by writing the Host SPI Select Enable (CTRLB.MSSEN) bit to '1'. In this mode, the $\overline{SS}$ pin is driven low for a minimum of one baud cycle before transmission begins, and stays low for a minimum of one baud cycle after transmission completes. If back-to-back frames are transmitted, the $\overline{SS}$ pin will always be driven high for a minimum of one baud cycle between frames.

In Hardware Controlled $\overline{SS}$, the time T is between one and two baud cycles depending on the SPI Transfer mode.

Figure 27-7. Hardware Controlled $\overline{SS}$

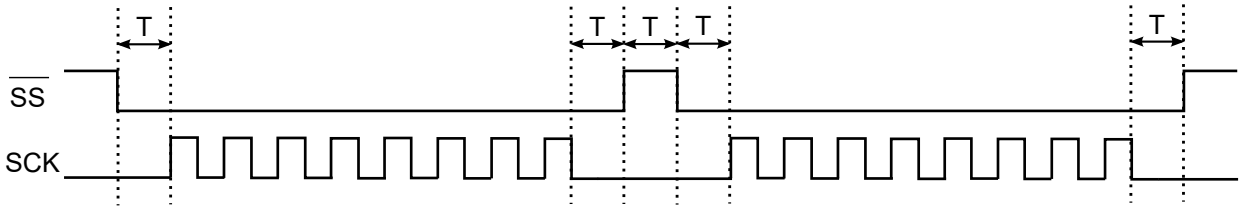

T = 1 to 2 baud cycles

When CTRLB.MSSEN=0, the $\overline{SS}$ pin(s) is/are controlled by user software and normal GPIO.

27.6.3.6 SPI Select Low Detection

In Client mode, the SPI can wake the CPU when the SPI Select ($\overline{SS}$) goes low. When the SPI Select Low Detect is enabled (CTRLB.SSDE=1), a high-to-low transition will set the SPI Select Low Interrupt flag (INTFLAG.SSL) and the device will wake-up if applicable.

Downloaded from Arrow.com.

27.6.4 DMA, Interrupts, and Events

Table 27-4. Module Request for SERCOM SPI

Condition	Request		
	DMA	Interrupt	Event
Data Register Empty (DRE)	Yes (request cleared when data is written)	Yes	NA
Receive Complete (RXC)	Yes (request cleared when data is read)	Yes	
Transmit Complete (TXC)	NA	Yes	
SPI Select low (SSL)	NA	Yes	
Error (ERROR)	NA	Yes	

27.6.4.1 DMA Operation

The SPI generates the following DMA requests:

- Data received (RX): The request is set when data is available in the receive FIFO. The request is cleared when DATA is read.
- Data transmit (TX): The request is set when the transmit buffer (TX DATA) is empty. The request is cleared when DATA is written.

27.6.4.2 Interrupts

The SPI has the following interrupt sources. These are asynchronous interrupts, and can wake-up the device from any Sleep mode:

- Data Register Empty (DRE)
- Receive Complete (RXC)
- Transmit Complete (TXC)
- SPI Select Low (SSL)
- Error (ERROR)

Each interrupt source has its own Interrupt flag. The Interrupt flag in the Interrupt Flag Status and Clear register (INTFLAG) will be set when the Interrupt condition is met. Each interrupt can be individually enabled by writing '1' to the corresponding bit in the Interrupt Enable Set register (INTENSET), and disabled by writing '1' to the corresponding bit in the Interrupt Enable Clear register (INTENCLR). The current state of enabled interrupts can be read from INTENSET or INTENCLR.

An interrupt request is generated when the Interrupt flag is set and if the corresponding interrupt is enabled. The interrupt request remains active until either the Interrupt flag is cleared, the interrupt is disabled, or the SPI is reset. For details on clearing Interrupt flags, refer to the INTFLAG register description.

The value of INTFLAG indicates which interrupt is executed. Note that interrupts must be globally enabled for interrupt requests. Refer to *Nested Vector Interrupt Controller* for details.

Related Links

11.2 Nested Vector Interrupt Controller

27.6.4.3 Events

Not applicable.

27.6.5 Sleep Mode Operation

The behavior in Sleep mode is depending on the host/client configuration and the Run In Standby bit in the Control A register (CTRLA.RUNSTDBY):

- Host operation, CTRLA.RUNSTDBY=1: The peripheral clock GCLK_SERCOMx_CORE will continue to run in Idle Sleep mode and in Standby Sleep mode. Any interrupt can wake-up the device.

Downloaded from Arrow.com.

- Host operation, CTRLA.RUNSTDBY=0: GLK_SERCOMx_CORE will be disabled after the ongoing transaction is finished. Any interrupt can wake up the device.
- Client operation, CTRLA.RUNSTDBY=1: The Receive Complete interrupt can wake-up the device.
- Client operation, CTRLA.RUNSTDBY=0: All reception will be dropped, including the ongoing transaction.

27.6.6 Synchronization

Due to asynchronicity between the main clock domain and the peripheral clock domains, some registers need to be synchronized when written or read.

The following bits are synchronized when written:

- Software Reset bit in the CTRLA register (CTRLA.SWRST)
- Enable bit in the CTRLA register (CTRLA.ENABLE)
- Receiver Enable bit in the CTRLB register (CTRLB.RXEN)

Note: CTRLB.RXEN is write-synchronized somewhat differently. See also *CTRLB* register for details.

Required write-synchronization is denoted by the "Write-Synchronized" property in the register description.

Related Links

14.3 Register Synchronization

Downloaded from Arrow.com.

27.7 Register Summary

Offset	Name	Bit Pos.	7	6	5	4	3	2	1	0
0x00	CTRLA	7:0	RUNSTDBY			MODE[2:0]			ENABLE	SWRST
		15:8								IBON
		23:16			DIPO[1:0]				DOPO[1:0]	
		31:24		DORD	CPOL	CPHA	FORM[3:0]			
0x04	CTRLB	7:0		PLOADEN				CHSIZE[2:0]		
		15:8	AMODE[1:0]		MSSEN				SSDE	
		23:16							RXEN	
		31:24								
0x08 ... 0x0B	Reserved									
0x0C	BAUD	7:0	BAUD[7:0]							
0x0D ... 0x13	Reserved									
0x14	INTENCLR	7:0	ERROR				SSL	RXC	TXC	DRE
0x15	Reserved									
0x16	INTENSET	7:0	ERROR				SSL	RXC	TXC	DRE
0x17	Reserved									
0x18	INTFLAG	7:0	ERROR				SSL	RXC	TXC	DRE
0x19	Reserved									
0x1A	STATUS	7:0						BUFOVF		
		15:8								
0x1C	SYNCBUSY	7:0						CTRLB	ENABLE	SWRST
		15:8								
		23:16								
		31:24								
0x20 ... 0x23	Reserved									
0x24	ADDR	7:0	ADDR[7:0]							
		15:8								
		23:16	ADDRMASK[7:0]							
		31:24								
0x28	DATA	7:0	DATA[7:0]							
		15:8								DATA[8]
0x2A ... 0x2F	Reserved									
0x30	DBGCTRL	7:0								DBGSTOP

27.8 Register Description

Registers can be 8, 16, or 32 bits wide. Atomic 8-, 16-, and 32-bit accesses are supported. In addition, the 8-bit quarters and 16-bit halves of a 32-bit register, and the 8-bit halves of a 16-bit register can be accessed directly.

Some registers require synchronization when read and/or written. Synchronization is denoted by the "Read-Synchronized" and/or "Write-Synchronized" property in each individual register description.

Refer to 27.6.6 Synchronization

Some registers are enable-protected, meaning they can only be written when the module is disabled. Enable-protection is denoted by the "Enable-Protected" property in each individual register description.

Optional write-protection by the Peripheral Access Controller (PAC) is denoted by the "PAC Write-Protection" property in each individual register description.

Downloaded from Arrow.com.

Refer to 27.5.8 Register Access Protection.

Downloaded from Arrow.com.

27.8.1 Control A

Name: CTRLA
Offset: 0x00
Reset: 0x00000000
Property: PAC Write-Protection, Enable-Protected, Write-Synchronized

Bit	31	30	29	28	27	26	25	24
		DORD	CPOL	CPHA	FORM[3:0]			
Access		R/W	R/W	R/W	R/W	R/W	R/W	R/W
Reset		0	0	0	0	0	0	0

Bit	23	22	21	20	19	18	17	16
			DIPO[1:0]				DOPO[1:0]	
Access			R/W	R/W			R/W	R/W
Reset			0	0			0	0

Bit	15	14	13	12	11	10	9	8
								IBON
Access								R/W
Reset								0

Bit	7	6	5	4	3	2	1	0
	RUNSTDBY			MODE[2:0]			ENABLE	SWRST
Access	R/W			R/W	R/W	R/W	R/W	R/W
Reset	0			0	0	0	0	0

Bit 30 – DORD Data Order
This bit selects the data order when a character is shifted out from the shift register.
This bit is not synchronized.

Value	Description
0	MSB is transferred first.
1	LSB is transferred first.

Bit 29 – CPOL Clock Polarity
In combination with the Clock Phase bit (CPHA), this bit determines the SPI transfer mode.
This bit is not synchronized.

Value	Description
0	SCK is low when idle. The leading edge of a clock cycle is a rising edge, while the trailing edge is a falling edge.
1	SCK is high when idle. The leading edge of a clock cycle is a falling edge, while the trailing edge is a rising edge.

Bit 28 – CPHA Clock Phase
In combination with the Clock Polarity bit (CPOL), this bit determines the SPI transfer mode.
This bit is not synchronized.

Mode	CPOL	CPHA	Leading Edge	Trailing Edge
0x0	0	0	Rising, sample	Falling, change
0x1	0	1	Rising, change	Falling, sample
0x2	1	0	Falling, sample	Rising, change
0x3	1	1	Falling, change	Rising, sample

Value	Description
0	The data is sampled on a leading SCK edge and changed on a trailing SCK edge.
1	The data is sampled on a trailing SCK edge and changed on a leading SCK edge.

Downloaded from Arrow.com.

Bits 27:24 – FORM[3:0] Frame Format
This bit field selects the various frame formats supported by the SPI in client mode. When the 'SPI frame with address' format is selected, the first byte received is checked against the ADDR register.

FORM[3:0]	Name	Description
0x0	SPI	SPI frame
0x1	-	Reserved
0x2	SPI_ADDR	SPI frame with address
0x3-0xF	-	Reserved

Bits 21:20 – DIPO[1:0] Data In Pinout
These bits define the data in (DI) pad configurations.
In host operation, DI is MISO.
In client operation, DI is MOSI.
These bits are not synchronized.

DIPO[1:0]	Name	Description
0x0	PAD[0]	SERCOM PAD[0] is used as data input
0x1	PAD[1]	SERCOM PAD[1] is used as data input
0x2	PAD[2]	SERCOM PAD[2] is used as data input
0x3	PAD[3]	SERCOM PAD[3] is used as data input

Bits 17:16 – DOPO[1:0] Data Out Pinout
This bit defines the available pad configurations for data out (DO), the serial clock (SCK) and the SPI select ($\overline{SS}$). In Client operation, the SPI Select line ($\overline{SS}$) is controlled by DOPO. In host operation, the SPI Select line ($\overline{SS}$) is either controlled by DOPO when CTRLB.MSSEN = 1, or by a GPIO driven by the application when CTRLB.MSSEN = 0.
In host operation, DO is MOSI.
In client operation, DO is MISO.
These bits are not synchronized.

DOPO	DO	SCK	Client $\overline{SS}$	Host $\overline{SS}$ (MSSEN = 1)	Host $\overline{SS}$ (MSSEN = 0)
0x0	PAD[0]	PAD[1]	PAD[2]	PAD[2]	Any GPIO configured by the application
0x1	PAD[2]	PAD[3]	PAD[1]	PAD[1]	Any GPIO configured by the application
0x2	PAD[3]	PAD[1]	PAD[2]	PAD[2]	Any GPIO configured by the application
0x3	PAD[0]	PAD[3]	PAD[1]	PAD[1]	Any GPIO configured by the application

Bit 8 – IBON Immediate Buffer Overflow Notification
This bit controls when the buffer overflow status bit (STATUS.BUFOVF) is set when a buffer overflow occurs.
This bit is not synchronized.

Value	Description
0	STATUS.BUFOVF is set when it occurs in the data stream.
1	STATUS.BUFOVF is set immediately upon buffer overflow.

Bit 7 – RUNSTDBY Run In Standby
This bit defines the functionality in standby sleep mode.
These bits are not synchronized.

RUNSTDBY	Client	Host
0x0	Disabled. All reception is dropped, including the ongoing transaction.	Generic clock is disabled when ongoing transaction is finished. All interrupts can wake up the device.
0x1	Ongoing transaction continues, wake on Receive Complete interrupt.	Generic clock is enabled while in sleep modes. All interrupts can wake up the device.

Bits 4:2 – MODE[2:0] Operating Mode
These bits must be written to 0x2 or 0x3 to select the SPI serial communication interface of the SERCOM.
0x2: SPI client operation
0x3: SPI host operation

Downloaded from Arrow.com.

These bits are not synchronized.

Bit 1 – ENABLE Enable
Due to synchronization, there is delay from writing CTRLA.ENABLE until the peripheral is enabled/disabled.
The value written to CTRL.ENABLE will read back immediately and the Synchronization Enable Busy bit in the Synchronization Busy register (SYNCBUSY.ENABLE) will be set. SYNCBUSY.ENABLE is cleared when the operation is complete.
This bit is not enable-protected.

Value	Description
0	The peripheral is disabled or being disabled.
1	The peripheral is enabled or being enabled.

Bit 0 – SWRST Software Reset
Writing '0' to this bit has no effect.
Writing '1' to this bit resets all registers in the SERCOM, except DBGCTRL, to their initial state, and the SERCOM will be disabled.
Writing "1' to CTRL.SWRST will always take precedence, meaning that all other writes in the same write-operation will be discarded. Any register write access during the ongoing reset will result in an APB error. Reading any register will return the reset value of the register.
Due to synchronization, there is a delay from writing CTRLA.SWRST until the reset is complete. CTRLA.SWRST and SYNCBUSY. SWRST will both be cleared when the reset is complete.
This bit is not enable-protected.

Value	Description
0	There is no reset operation ongoing.
1	The reset operation is ongoing.

Downloaded from Arrow.com.

27.8.2 Control B

Name: CTRLB
Offset: 0x04
Reset: 0x00000000
Property: PAC Write-Protection, Enable-Protected, Write-Synchronized

Bit	31	30	29	28	27	26	25	24
Access								
Reset								

Bit	23	22	21	20	19	18	17	16
							RXEN	
Access							R/W	
Reset							0	

Bit	15	14	13	12	11	10	9	8
	AMODE[1:0]		MSSEN				SSDE	
Access	R/W	R/W	R/W				R/W	
Reset	0	0	0				0	

Bit	7	6	5	4	3	2	1	0
		PLOADEN				CHSIZE[2:0]		
Access		R/W				R/W	R/W	R/W
Reset		0				0	0	0

Bit 17 – RXEN Receiver Enable
Writing '0' to this bit will disable the SPI receiver immediately. The receive buffer will be flushed, data from ongoing receptions will be lost and STATUS.BUFOVF will be cleared.
Writing '1' to CTRLB.RXEN when the SPI is disabled will set CTRLB.RXEN immediately. When the SPI is enabled, CTRLB.RXEN will be cleared, SYNCBUSY.CTRLB will be set and remain set until the receiver is enabled. When the receiver is enabled CTRLB.RXEN will read back as '1'.
Writing '1' to CTRLB.RXEN when the SPI is enabled will set SYNCBUSY.CTRLB, which will remain set until the receiver is enabled, and CTRLB.RXEN will read back as '1'.
This bit is not enable-protected.

Value	Description
0	The receiver is disabled or being enabled.
1	The receiver is enabled or it will be enabled when SPI is enabled.

Bits 15:14 – AMODE[1:0] Address Mode
These bits set the Client Addressing mode when the frame format (CTRLA.FORM) with address is used. They are unused in Host mode.
These bits are not synchronized.

AMODE[1:0]	Name	Description
0x0	MASK	ADDRMASK is used as a mask to the ADDR register
0x1	2_ADDRS	The client responds to the two unique addresses in ADDR and ADDRMASK
0x2	RANGE	The client responds to the range of addresses between and including ADDR and ADDRMASK. ADDR is the upper limit
0x3	-	Reserved

Bit 13 – MSSEN Host SPI Select Enable
This bit enables hardware SPI Select ($\overline{SS}$) control.
This bit is not synchronized.

Downloaded from Arrow.com.

Value	Description
0	Hardware $\overline{SS}$ control is disabled.
1	Hardware $\overline{SS}$ control is enabled.

Bit 9 – SSDE SPI Select Low Detect Enable
This bit enables wake-up when the SPI Select ($\overline{SS}$) pin transitions from high to low.
This bit is not synchronized.

Value	Description
0	$\overline{SS}$ low detector is disabled.
1	$\overline{SS}$ low detector is enabled.

Bit 6 – PLOADEN Client Data Preload Enable
Setting this bit will enable preloading of the Client Shift register when there is no transfer in progress. If the $\overline{SS}$ line is high when DATA is written, it will be transferred immediately to the Shift register.
This bit is not synchronized.

Bits 2:0 – CHSIZE[2:0] Character Size
These bits are not synchronized.

CHSIZE[2:0]	Name	Description
0x0	8BIT	8 bits
0x1	9BIT	9 bits
0x2-0x7	-	Reserved

Downloaded from Arrow.com.

27.8.3 Baud Rate

Name: BAUD
Offset: 0x0C
Reset: 0x00
Property: PAC Write-Protection, Enable-Protected

Bit	7	6	5	4	3	2	1	0
	BAUD[7:0]							
Access	R/W	R/W	R/W	R/W	R/W	R/W	R/W	R/W
Reset	0	0	0	0	0	0	0	0

Bits 7:0 – BAUD[7:0] Baud Register
These bits control the clock generation, as described in the *SERCOM Clock Generation – Baud-Rate Generator*.

Related Links
25.6.2.3 Clock Generation – Baud-Rate Generator

Downloaded from Arrow.com.

27.8.4 Interrupt Enable Clear

Name: INTENCLR
Offset: 0x14
Reset: 0x00
Property: PAC Write-Protection

This register allows the user to disable an interrupt without read-modify-write operation. Changes in this register will also be reflected in the Interrupt Enable Set register (INTENSET).

Bit	7	6	5	4	3	2	1	0
	ERROR				SSL	RXC	TXC	DRE
Access	R/W				R/W	R/W	R/W	R/W
Reset	0				0	0	0	0

Bit 7 – ERROR Error Interrupt Enable
Writing '0' to this bit has no effect.
Writing '1' to this bit will clear the Error Interrupt Enable bit, which disables the Error interrupt.

Value	Description
0	Error interrupt is disabled.
1	Error interrupt is enabled.

Bit 3 – SSL SPI Select Low Interrupt Enable
Writing '0' to this bit has no effect.
Writing '1' to this bit will clear the SPI Select Low Interrupt Enable bit, which disables the SPI Select Low interrupt.

Value	Description
0	SPI Select Low interrupt is disabled.
1	SPI Select Low interrupt is enabled.

Bit 2 – RXC Receive Complete Interrupt Enable
Writing '0' to this bit has no effect.
Writing '1' to this bit will clear the Receive Complete Interrupt Enable bit, which disables the Receive Complete interrupt.

Value	Description
0	Receive Complete interrupt is disabled.
1	Receive Complete interrupt is enabled.

Bit 1 – TXC Transmit Complete Interrupt Enable
Writing '0' to this bit has no effect.
Writing '1' to this bit will clear the Transmit Complete Interrupt Enable bit, which disable the Transmit Complete interrupt.

Value	Description
0	Transmit Complete interrupt is disabled.
1	Transmit Complete interrupt is enabled.

Bit 0 – DRE Data Register Empty Interrupt Enable
Writing '0' to this bit has no effect.
Writing '1' to this bit will clear the Data Register Empty Interrupt Enable bit, which disables the Data Register Empty interrupt.

Value	Description
0	Data Register Empty interrupt is disabled.
1	Data Register Empty interrupt is enabled.

Downloaded from Arrow.com.

27.8.5 Interrupt Enable Set

Name: INTENSET
Offset: 0x16
Reset: 0x00
Property: PAC Write-Protection

This register allows the user to disable an interrupt without read-modify-write operation. Changes in this register will also be reflected in the Interrupt Enable Clear register (INTENCLR).

Bit	7	6	5	4	3	2	1	0
	ERROR				SSL	RXC	TXC	DRE
Access	R/W				R/W	R/W	R/W	R/W
Reset	0				0	0	0	0

Bit 7 – ERROR Error Interrupt Enable
Writing '0' to this bit has no effect.
Writing '1' to this bit will set the Error Interrupt Enable bit, which enables the Error interrupt.

Value	Description
0	Error interrupt is disabled.
1	Error interrupt is enabled.

Bit 3 – SSL SPI Select Low Interrupt Enable
Writing '0' to this bit has no effect.
Writing '1' to this bit will set the SPI Select Low Interrupt Enable bit, which enables the SPI Select Low interrupt.

Value	Description
0	SPI Select Low interrupt is disabled.
1	SPI Select Low interrupt is enabled.

Bit 2 – RXC Receive Complete Interrupt Enable
Writing '0' to this bit has no effect.
Writing '1' to this bit will set the Receive Complete Interrupt Enable bit, which enables the Receive Complete interrupt.

Value	Description
0	Receive Complete interrupt is disabled.
1	Receive Complete interrupt is enabled.

Bit 1 – TXC Transmit Complete Interrupt Enable
Writing '0' to this bit has no effect.
Writing '1' to this bit will set the Transmit Complete Interrupt Enable bit, which enables the Transmit Complete interrupt.

Value	Description
0	Transmit Complete interrupt is disabled.
1	Transmit Complete interrupt is enabled.

Bit 0 – DRE Data Register Empty Interrupt Enable
Writing '0' to this bit has no effect.
Writing '1' to this bit will set the Data Register Empty Interrupt Enable bit, which enables the Data Register Empty interrupt.

Value	Description
0	Data Register Empty interrupt is disabled.
1	Data Register Empty interrupt is enabled.

Downloaded from Arrow.com.

27.8.6 Interrupt Flag Status and Clear

Name: INTFLAG
Offset: 0x18
Reset: 0x00
Property: -

Bit	7	6	5	4	3	2	1	0
	ERROR				SSL	RXC	TXC	DRE
Access	R/W				R/W	R	R/W	R
Reset	0				0	0	0	0

Bit 7 – ERROR Error
This flag is cleared by writing '1' to it.
This bit is set when any error is detected. Errors that will set this flag have corresponding Status flags in the STATUS register. The BUFOVF error will set this Interrupt flag.
Writing '0' to this bit has no effect.
Writing '1' to this bit will clear the flag.

Bit 3 – SSL SPI Select Low
This flag is cleared by writing '1' to it.
This bit is set when a high to low transition is detected on the $\overline{SS}$ pin in Client mode and SPI Select Low Detect (CTRLB.SSDE) is enabled.
Writing '0' to this bit has no effect.
Writing '1' to this bit will clear the flag.

Bit 2 – RXC Receive Complete
This flag is cleared by reading the Data (DATA) register or by disabling the receiver.
This flag is set when there are unread data in the receive buffer. If address matching is enabled, the first data received in a transaction will be an address.
Writing '0' to this bit has no effect.
Writing '1' to this bit has no effect.

Bit 1 – TXC Transmit Complete
This flag is cleared by writing '1' to it or by writing new data to DATA.
In Host mode, this flag is set when the data have been shifted out and there are no new data in DATA.
In Client mode, this flag is set when the $\overline{SS}$ pin is pulled high. If address matching is enabled, this flag is only set if the transaction was initiated with an address match.
Writing '0' to this bit has no effect.
Writing '1' to this bit will clear the flag.

Bit 0 – DRE Data Register Empty
This flag is cleared by writing new data to DATA.
This flag is set when DATA is empty and ready for new data to transmit.
Writing '0' to this bit has no effect.
Writing '1' to this bit has no effect.

Downloaded from Arrow.com.

27.8.7 Status

Name: STATUS
Offset: 0x1A
Reset: 0x0000
Property: –

Bit	15	14	13	12	11	10	9	8
Access								
Reset								

Bit	7	6	5	4	3	2	1	0
						BUFOVF		
Access						R/W		
Reset						0		

Bit 2 – BUFOVF Buffer Overflow
Reading this bit before reading DATA will indicate the error status of the next character to be read.
This bit is cleared by writing '1' to the bit or by disabling the receiver.
This bit is set when a buffer overflow condition is detected. See also CTRLA.IBON for overflow handling.
When set, the corresponding RxDATA will be zero.
Writing '0' to this bit has no effect.
Writing '1' to this bit will clear it.

Value	Description
0	No Buffer Overflow has occurred.
1	A Buffer Overflow has occurred.

Downloaded from Arrow.com.

27.8.8 Synchronization Busy

Name: SYNCBUSY
Offset: 0x1C
Reset: 0x00000000
Property: -

Bit	31	30	29	28	27	26	25	24
Access								
Reset								

Bit	23	22	21	20	19	18	17	16
Access								
Reset								

Bit	15	14	13	12	11	10	9	8
Access								
Reset								

Bit	7	6	5	4	3	2	1	0
						CTRLB	ENABLE	SWRST
Access						R	R	R
Reset						0	0	0

Bit 2 – CTRLB CTRLB Synchronization Busy
Writing to the CTRLB when the SERCOM is enabled requires synchronization. Ongoing synchronization is indicated by SYNCBUSY.CTRLB=1 until synchronization is complete. If CTRLB is written while SYNCBUSY.CTRLB=1, an APB error will be generated.

Value	Description
0	CTRLB synchronization is not busy.
1	CTRLB synchronization is busy.

Bit 1 – ENABLE SERCOM Enable Synchronization Busy
Enabling and disabling the SERCOM (CTRLA.ENABLE) requires synchronization. Ongoing synchronization is indicated by SYNCBUSY.ENABLE=1 until synchronization is complete.

Value	Description
0	Enable synchronization is not busy.
1	Enable synchronization is busy.

Bit 0 – SWRST Software Reset Synchronization Busy
Resetting the SERCOM (CTRLA.SWRST) requires synchronization. Ongoing synchronization is indicated by SYNCBUSY.SWRST=1 until synchronization is complete.

Value	Description
0	SWRST synchronization is not busy.
1	SWRST synchronization is busy.

Downloaded from Arrow.com.

27.8.9 Address

Name: ADDR
Offset: 0x24
Reset: 0x00000000
Property: PAC Write-Protection, Enable-Protected

Bit	31	30	29	28	27	26	25	24
Access								
Reset								

Bit	23	22	21	20	19	18	17	16
	ADDRMASK[7:0]							
Access	R/W	R/W	R/W	R/W	R/W	R/W	R/W	R/W
Reset	0	0	0	0	0	0	0	0

Bit	15	14	13	12	11	10	9	8
Access								
Reset								

Bit	7	6	5	4	3	2	1	0
	ADDR[7:0]							
Access	R/W	R/W	R/W	R/W	R/W	R/W	R/W	R/W
Reset	0	0	0	0	0	0	0	0

Bits 23:16 – ADDRMASK[7:0] Address Mask
These bits hold the address mask when the transaction format with address is used (CTRLA.FORM, CTRLB.AMODE).

Bits 7:0 – ADDR[7:0] Address
These bits hold the address when the transaction format with address is used (CTRLA.FORM, CTRLB.AMODE).

Downloaded from Arrow.com.

27.8.10 Data

Name: DATA
Offset: 0x28
Reset: 0x0000
Property: –

Bit	15	14	13	12	11	10	9	8
								DATA[8]
Access								R/W
Reset								0

Bit	7	6	5	4	3	2	1	0
	DATA[7:0]							
Access	R/W	R/W	R/W	R/W	R/W	R/W	R/W	R/W
Reset	0	0	0	0	0	0	0	0

Bits 8:0 – DATA[8:0] Data
Reading these bits will return the contents of the receive data buffer. The register should be read only when the Receive Complete Interrupt Flag bit in the Interrupt Flag Status and Clear register (INTFLAG.RXC) is set.
Writing these bits will write the transmit data buffer. This register should be written only when the Data Register Empty Interrupt Flag bit in the Interrupt Flag Status and Clear register (INTFLAG.DRE) is set.

Downloaded from Arrow.com.

27.8.11 Debug Control

Name: DBGCTRL
Offset: 0x30
Reset: 0x00
Property: PAC Write-Protection

Bit	7	6	5	4	3	2	1	0
								DBGSTOP
Access								R/W
Reset								0

Bit 0 – DBGSTOP Debug Stop Mode
This bit controls the functionality when the CPU is halted by an external debugger.

Value	Description
0	The baud-rate generator continues normal operation when the CPU is halted by an external debugger.
1	The baud-rate generator is halted when the CPU is halted by an external debugger.

Downloaded from Arrow.com.

28. SERCOM I²C – Inter-Integrated Circuit

28.1 Overview

The inter-integrated circuit (I²C) interface is one of the available modes in the serial communication interface (SERCOM).

The I²C interface uses the SERCOM transmitter and receiver configured as shown in Figure 28-1. Labels in capital letters are registers accessible by the CPU, while lowercase labels are internal to the SERCOM.

A SERCOM instance can be configured to be either an I²C host or an I²C client. Both host and client have an interface containing a shift register, a transmit buffer and a receive buffer. In addition, the I²C host uses the SERCOM baud-rate generator, while the I²C client uses the SERCOM address match logic.

Related Links

25. SERCOM – Serial Communication Interface

28.2 Features

SERCOM I²C includes the following features:

- Host or Client Operation
- Can be used with DMA
- Philips I²C Compatible
- SMBus Compatible
- PMBus™ Compatible
- Support of 100 kHz and 400 kHz, 1 MHz and 3.4 MHz I²C mode
- 4-Wire Operation Supported
- Physical interface includes:
  - Slew-rate limited outputs
  - Filtered inputs
- Client Operation:
  - Operation in all Sleep modes
  - Wake-up on address match
  - 7-bit and 10-bit Address match in hardware for:
  -
    - Unique address and/or 7-bit general call address
    - Address range
    - Two unique addresses can be used with DMA

Related Links

25.2 Features

Downloaded from Arrow.com.

28.3 Block Diagram

Figure 28-1. I²C Single-Host Single-Client Interconnection

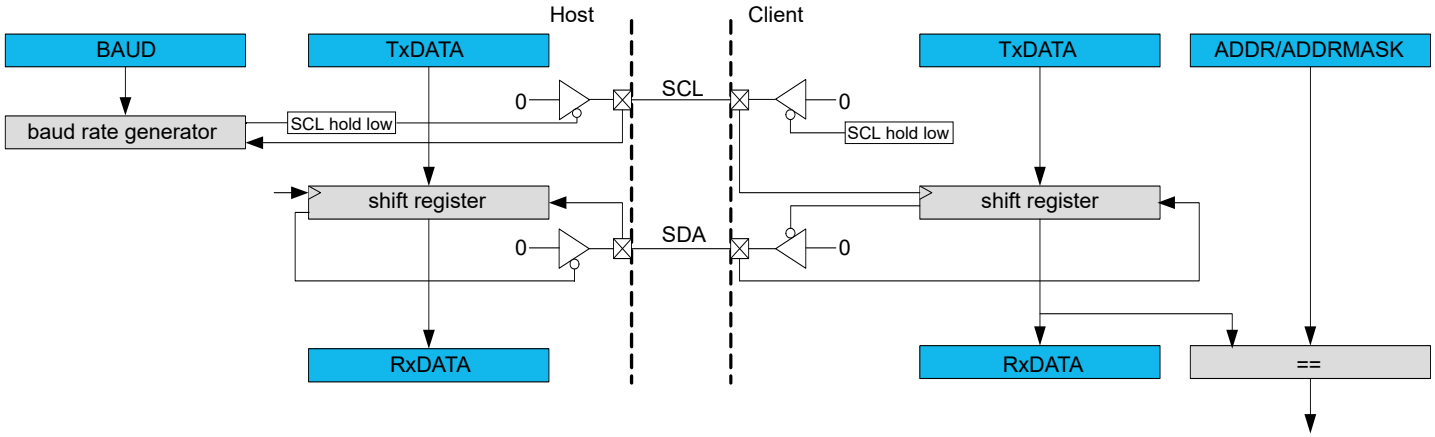

28.4 Signal Description

Signal Name	Type	Description
PAD[0]	Digital I/O	SDA
PAD[1]	Digital I/O	SCL
PAD[2]	Digital I/O	SDA_OUT (4-wire operation)
PAD[3]	Digital I/O	SCL_OUT (4-wire operation)

One signal can be mapped on several pins.

Not all the pins are I²C pins. Refer to Table 7-5. SERCOM Pins Supporting I²C for additional information .

Related Links

7. I/O Multiplexing and Considerations

28.6.3.3 4-Wire Mode

28.5 Product Dependencies

In order to use this peripheral, other parts of the system must be configured correctly, as described below.

28.5.1 I/O Lines

In order to use the I/O lines of this peripheral, the I/O pins must be configured using the I/O Pin Controller (PORT).

When the SERCOM is used in I²C mode, the SERCOM controls the direction and value of the I/O pins. If the receiver or transmitter is disabled, these pins can be used for other purposes.

Related Links

23. PORT - I/O Pin Controller

28.5.2 Power Management

This peripheral can continue to operate in any sleep mode where its source clock is running. The interrupts can wake up the device from sleep modes.

Related Links

16. PM – Power Manager

Downloaded from Arrow.com.

28.5.3 Clocks

The SERCOM bus clock (CLK_SERCOMx_APB) can be enabled and disabled in the Power Manager. Refer to *Peripheral Clock Masking* for details and default status of this clock.

Two generic clocks are used by SERCOM: GCLK_SERCOMx_CORE and GCLK_SERCOM_SLOW. The core clock (GCLK_SERCOMx_CORE) can clock the I^2C when working as a host. The slow clock (GCLK_SERCOM_SLOW) is required only for certain functions, e.g. SMBus timing. These two clocks must be configured and enabled in the Generic Clock Controller (GCLK) before using the I^2C.

These generic clocks are asynchronous to the bus clock (CLK_SERCOMx_APB). Due to this asynchronicity, writes to certain registers will require synchronization between the clock domains. Refer to 28.6.6 Synchronization for further details.

Related Links

15. GCLK - Generic Clock Controller
16. PM – Power Manager
16.6.2.6 Peripheral Clock Masking

28.5.4 DMA

The DMA request lines are connected to the DMA Controller (DMAC). In order to use DMA requests with this peripheral the DMAC must be configured first. Refer to *DMAC – Direct Memory Access Controller* for details.

Related Links

20. DMAC – Direct Memory Access Controller

28.5.5 Interrupts

The interrupt request line is connected to the Interrupt Controller. In order to use interrupt requests of this peripheral, the Interrupt Controller (NVIC) must be configured first. Refer to *Nested Vector Interrupt Controller* for details.

Related Links

11.2 Nested Vector Interrupt Controller

28.5.6 Events

Not applicable.

28.5.7 Debug Operation

When the CPU is halted in debug mode, this peripheral will continue normal operation. If the peripheral is configured to require periodical service by the CPU through interrupts or similar, improper operation or data loss may result during debugging. This peripheral can be forced to halt operation during debugging - refer to the Debug Control (DBGCTRL) register for details.

28.5.8 Register Access Protection

Registers with write-access can be write-protected optionally by the peripheral access controller (PAC).

PAC Write-Protection is not available for the following registers:

- Interrupt Flag Clear and Status register (INTFLAG)
- Status register (STATUS)
- Data register (DATA)
- Address register (ADDR)

Optional PAC Write-Protection is denoted by the "PAC Write-Protection" property in each individual register description.

Write-protection does not apply to accesses through an external debugger.

Related Links

11.6 Peripheral Access Controller (PAC)

Downloaded from Arrow.com.

28.5.9 Analog Connections

Not applicable.

28.6 Functional Description

28.6.1 Principle of Operation

The I²C interface uses two physical lines for communication:

- Serial Data Line (SDA) for data transfer
- Serial Clock Line (SCL) for the bus clock

A transaction starts with the I²C host sending the Start condition, followed by a 7-bit address and a direction bit (read or write to/from the client).

The addressed I²C client will then Acknowledge (ACK) the address, and data packet transactions can begin. Every 9-bit data packet consists of 8 data bits followed by a one-bit reply indicating whether the data was acknowledged or not.

If a data packet is Not Acknowledged (NACK), whether by the I²C client or host, the I²C host takes action by either terminating the transaction by sending the Stop condition, or by sending a repeated start to transfer more data.

The figure below illustrates the possible transaction formats and Transaction Diagram Symbols explains the transaction symbols. These symbols will be used in the following descriptions.

Figure 28-2. Transaction Diagram Symbols

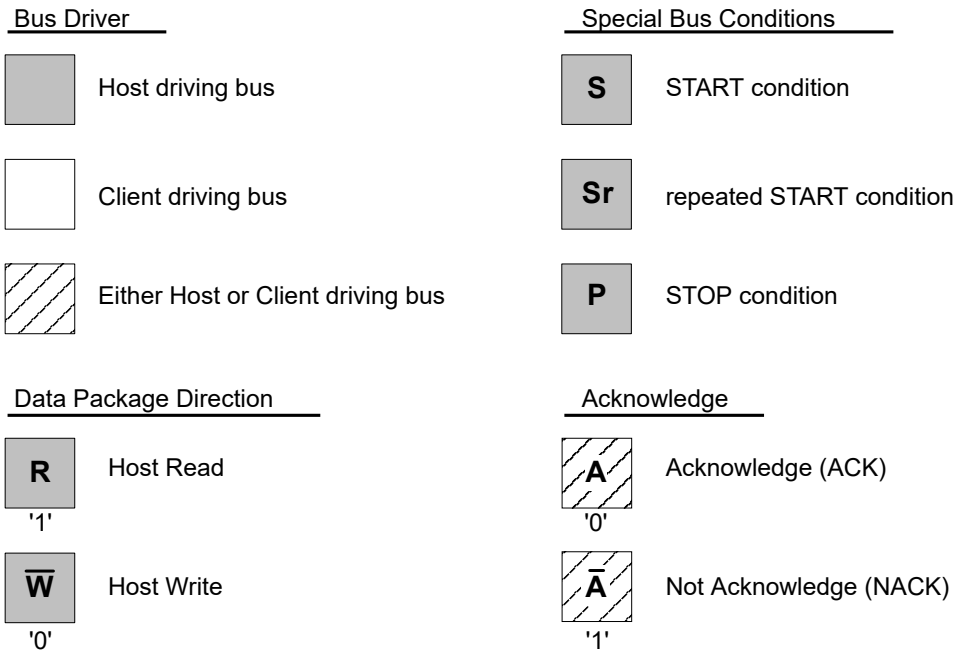

Downloaded from Arrow.com.

Figure 28-3. Basic I²C Transaction Diagram

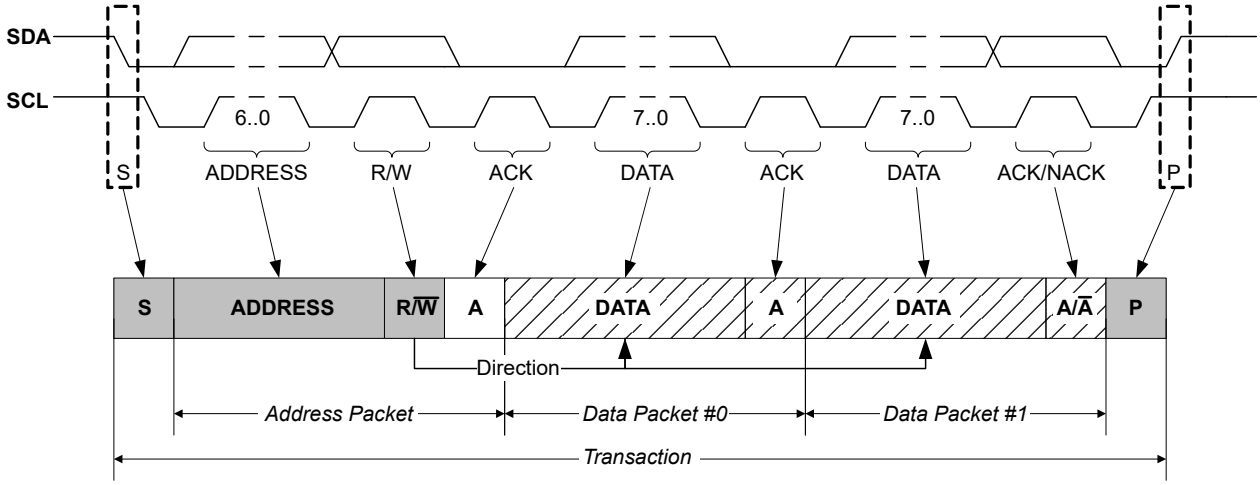

28.6.2 Basic Operation

28.6.2.1 Initialization

The following registers are enable-protected, meaning they can be written only when the I²C interface is disabled (CTRLA.ENABLE is '0'):

- Control A register (CTRLA), except Enable (CTRLA.ENABLE) and Software Reset (CTRLA.SWRST) bits
- Control B register (CTRLB), except Acknowledge Action (CTRLB.ACKACT) and Command (CTRLB.CMD) bits
- Baud register (BAUD)
- Address register (ADDR) in client operation.

When the I²C is enabled or is being enabled (CTRLA.ENABLE=1), writing to these registers will be discarded. If the I²C is being disabled, writing to these registers will be completed after the disabling.

Enable-protection is denoted by the "Enable-Protection" property in the register description.

Before the I²C is enabled it must be configured as outlined by the following steps:

1. Select I²C Host or Client mode by writing 0x4 (Client mode) or 0x5 (Host mode) to the Operating Mode bits in the CTRLA register (CTRLA.MODE).
2. If desired, select the SDA Hold Time value in the CTRLA register (CTRLA.SDAHOLD).
3. If desired, enable smart operation by setting the Smart Mode Enable bit in the CTRLB register (CTRLB.SMEN).
4. If desired, enable SCL low time-out by setting the SCL Low Time-Out bit in the Control A register (CTRLA.LOWTOUTEN).
5. In Host mode:
   a. Select the inactive bus time-out in the Inactive Time-Out bit group in the CTRLA register (CTRLA.INACTOUT).
   b. Write the Baud Rate register (BAUD) to generate the desired baud rate.

   In Client mode:
   a. Configure the address match configuration by writing the Address Mode value in the CTRLB register (CTRLB.AMODE).
   b. Set the Address and Address Mask value in the Address register (ADDR.ADDR and ADDR.ADDRMASK) according to the address configuration.

28.6.2.2 Enabling, Disabling, and Resetting

This peripheral is enabled by writing '1' to the Enable bit in the Control A register (CTRLA.ENABLE), and disabled by writing '0' to it.

Writing '1' to the Software Reset bit in the Control A register (CTRLA.SWRST) will reset all registers of this peripheral to their initial states, except the DBGCTRL register, and the peripheral is disabled.

Downloaded from Arrow.com.

28.6.2.3 I²C Bus State Logic

The Bus state logic includes several logic blocks that continuously monitor the activity on the I²C bus lines in all Sleep modes with running GCLK_SERCOM_x clocks. The start and stop detectors and the bit counter are all essential in the process of determining the current Bus state. The Bus state is determined according to Bus State Diagram. Software can get the current Bus state by reading the Host Bus State bits in the Status register (STATUS.BUSSTATE). The value of STATUS.BUSSTATE in the figure is shown in binary.

Figure 28-4. Bus State Diagram

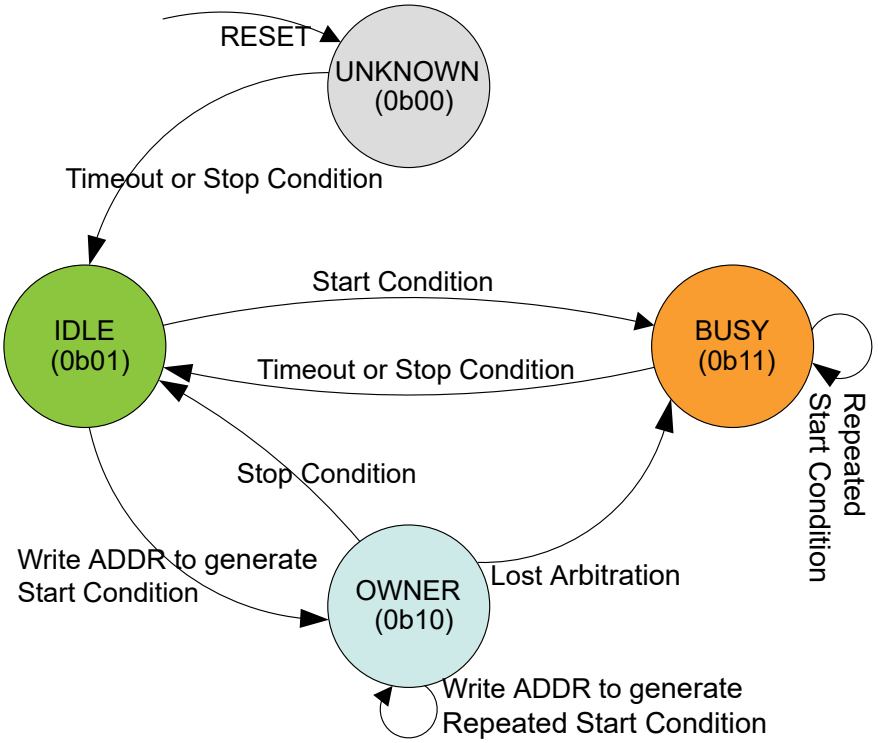

The Bus state machine is active when the I²C host is enabled.

After the I²C host has been enabled, the Bus state is UNKNOWN (0b00). From the UNKNOWN state, the bus will transition to IDLE (0b01) by either:

- Forcing by writing 0b01 to STATUS.BUSSTATE
- A Stop condition is detected on the bus
- If the inactive bus time-out is configured for SMBus compatibility (CTRLA.INACTOUT) and a time-out occurs.

Note: Once a known Bus state is established, the Bus state logic will not re-enter the UNKNOWN state.

When the bus is IDLE it is ready for a new transaction. If a Start condition is issued on the bus by another I²C host in a multi-host setup, the bus becomes BUSY (0b11). The bus will re-enter IDLE either when a Stop condition is detected, or when a time-out occurs (inactive bus time-out needs to be configured).

If a Start condition is generated internally by writing the Address bit group in the Address register (ADDR.ADDR) while IDLE, the OWNER state (0b10) is entered. If the complete transaction was performed without interference, i.e., arbitration was not lost, the I²C host can issue a Stop condition, which will change the Bus state back to IDLE.

However, if a packet collision is detected while in OWNER state, the arbitration is assumed lost and the Bus state becomes BUSY until a Stop condition is detected. A repeated Start condition will change the Bus state only if arbitration is lost while issuing a repeated start.

Note: Violating the protocol may cause the I²C to hang. If this happens it is possible to recover from this state by a software Reset (CTRLA.SWRST='1').

Related Links

28.10.1 CTRLA

Downloaded from Arrow.com.

28.6.2.4 I²C Host Operation

The I²C host is byte-oriented and interrupt based. The number of interrupts generated is kept at a minimum by automatic handling of most incidents. The software driver complexity and code size are reduced by auto-triggering of operations, and a Special Smart mode, which can be enabled by the Smart Mode Enable bit in the Control B register (CTRLB.SMEN).

The I²C host has two interrupt strategies.

When SCL Clock Stretch Mode (CTRLA.SCLSM) is '0', SCL is stretched before or after the Acknowledge bit . In this mode the I²C host operates according to the following figure. The circles labeled "M*n*" (M1, M2..) indicate the nodes the bus logic can jump to, based on software or hardware interaction.

This diagram is used as reference for the description of the I²C host operation throughout the document.

Figure 28-5. I²C Host Behavioral Diagram (SCLSM=0)

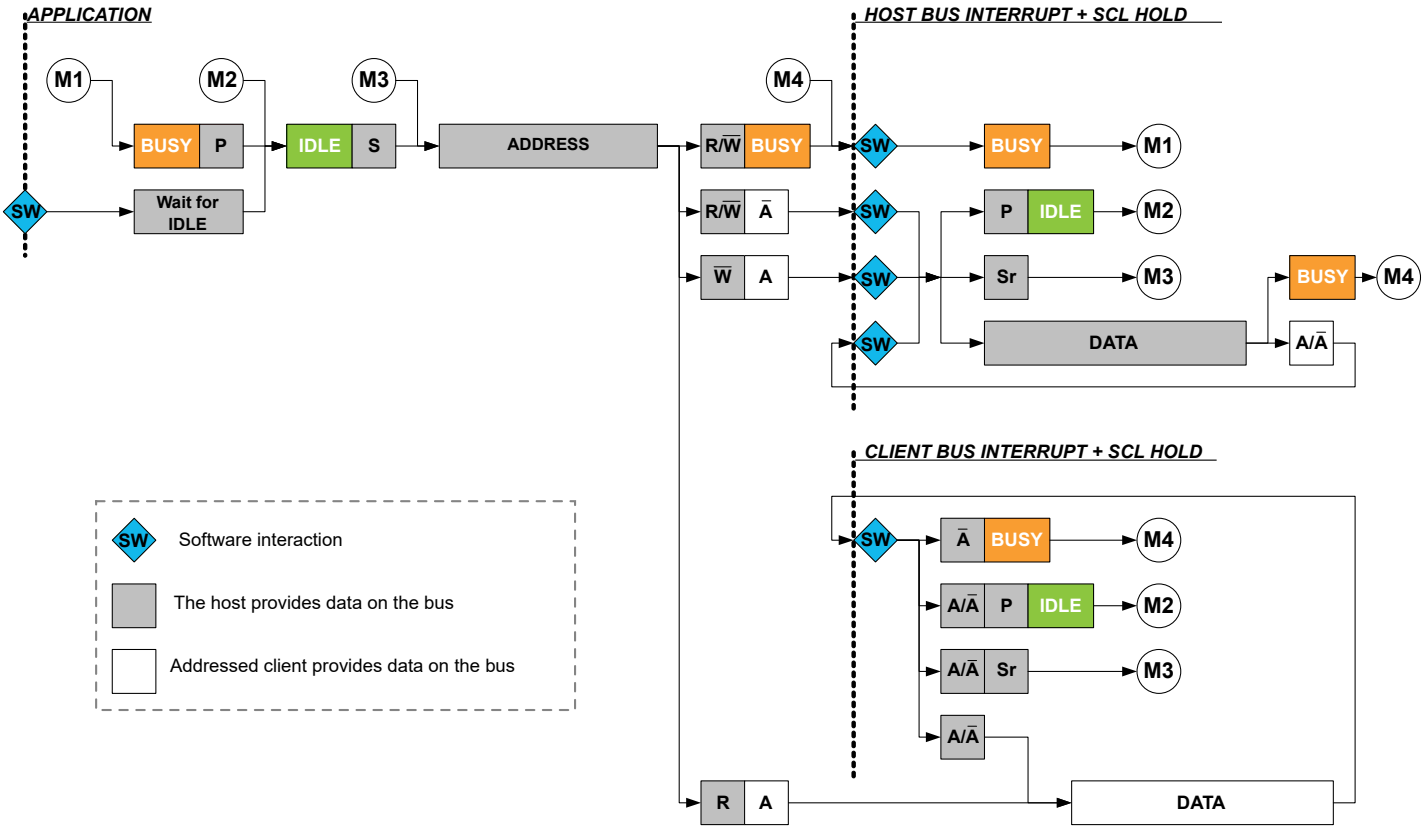

In the second strategy (CTRLA.SCLSM=1), interrupts only occur after the ACK bit, as shown in the following figure. This strategy can be used when it is not necessary to check DATA before acknowledging.

Note: I²C High-speed (*Hs*) mode requires CTRLA.SCLSM=1.

Downloaded from Arrow.com.

Figure 28-6. I²C Host Behavioral Diagram (SCLSM=1)

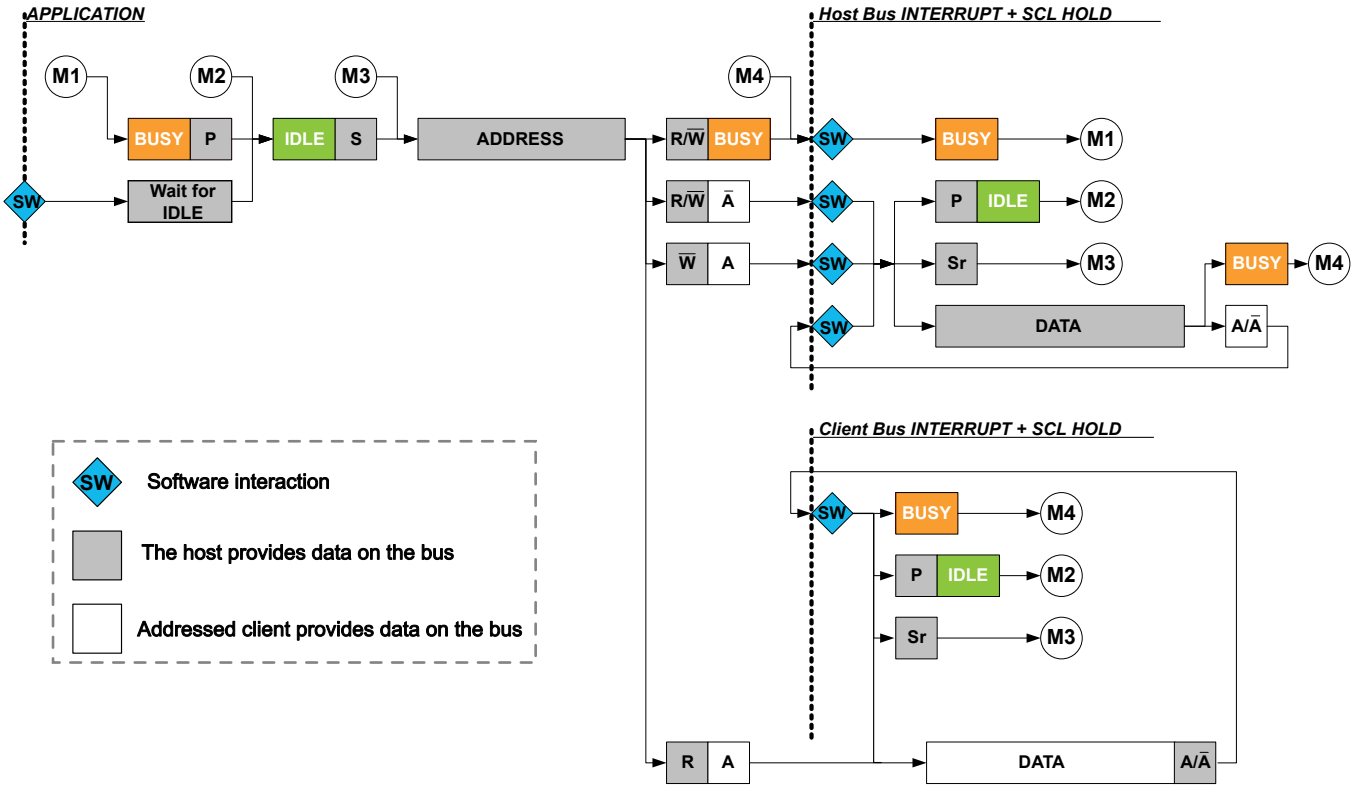

28.6.2.4.1 Host Clock Generation

The SERCOM peripheral supports several I²C bidirectional modes:

- Standard mode (*Sm*) up to 100 kHz
- Fast mode (*Fm*) up to 400 kHz
- Fast mode Plus (*Fm+*) up to 1 MHz
- High-speed mode (*Hs*) up to 3.4 MHz

The Host clock configuration for *Sm, Fm,* and *Fm+* are described in Clock Generation (Standard-Mode, Fast-Mode, and Fast-Mode Plus). For *Hs*, refer to Host Clock Generation (High-Speed Mode).

Clock Generation (Standard-Mode, Fast-Mode, and Fast-Mode Plus)

In I²C *Sm, Fm*, and *Fm+* mode, the Host clock (SCL) frequency is determined as described in this section:

The low (T_{LOW}) and high (T_{HIGH}) times are determined by the Baud Rate register (BAUD), while the rise (T_{RISE}) and fall (T_{FALL}) times are determined by the bus topology. Because of the wired-AND logic of the bus, T_{FALL} will be considered as part of T_{LOW}. Likewise, T_{RISE} will be in a state between T_{LOW} and T_{HIGH} until a high state has been detected.

Downloaded from Arrow.com.

Figure 28-7. SCL Timing

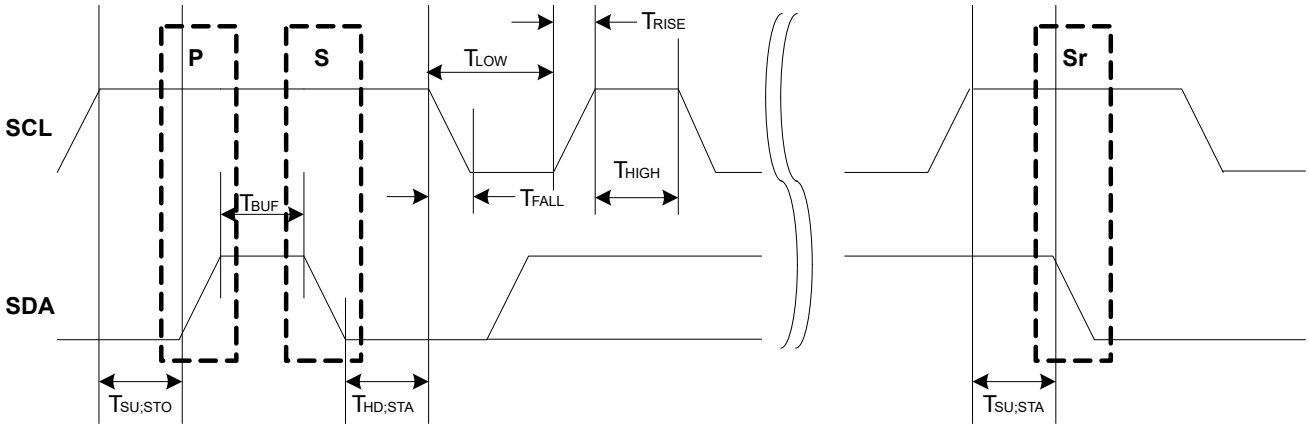

The following parameters are timed using the SCL low time period T_{LOW}. This comes from the Host Baud Rate Low bit group in the Baud Rate register (BAUD.BAUDLOW). When BAUD.BAUDLOW=0, or the Host Baud Rate bit group in the Baud Rate register (BAUD.BAUD) determines it.

- T_{LOW} – Low period of SCL clock
- $T_{SU;STO}$ – Set-up time for stop condition
- T_{BUF} – Bus free time between stop and start conditions
- $T_{HD;STA}$ – Hold time (repeated) start condition
- $T_{SU;STA}$ – Set-up time for repeated start condition
- T_{HIGH} is timed using the SCL high time count from BAUD.BAUD
- T_{RISE} is determined by the bus impedance; for internal pull-ups.
- T_{FALL} is determined by the open-drain current limit and bus impedance; can typically be regarded as zero.

The SCL frequency is given by:

$$f_{SCL} = \frac{1}{T_{LOW} + T_{HIGH} + T_{RISE}}$$

When BAUD.BAUDLOW is zero, the BAUD.BAUD value is used to time both SCL high and SCL low. In this case the following formula will give the SCL frequency:

$$f_{SCL} = \frac{f_{GCLK}}{10 + 2BAUD + f_{GCLK} \cdot T_{RISE}}$$

When BAUD.BAUDLOW is non-zero, the following formula determines the SCL frequency:

$$f_{SCL} = \frac{f_{GCLK}}{10 + BAUD + BAUDLOW + f_{GCLK} \cdot T_{RISE}}$$

The following formulas can determine the SCL T_{LOW} and T_{HIGH} times:

$$T_{LOW} = \frac{BAUDLOW + 5}{f_{GCLK}}$$

$$T_{HIGH} = \frac{BAUD + 5}{f_{GCLK}}$$

Note: The I²C standard *Fm+* (Fast-mode plus) requires a nominal high to low SCL ratio of 1:2, and BAUD should be set accordingly. At a minimum, BAUD.BAUD and/or BAUD.BAUDLOW must be non-zero.

Startup Timing The minimum time between SDA transition and SCL rising edge is 6 APB cycles when the DATA register is written in smart mode. If a greater startup time is required due to long rise times, the time between DATA write and IF clear must be controlled by software.
Note: When timing is controlled by user, the Smart Mode cannot be enabled.

Related Links

37. Electrical Characteristics at 85°C

Downloaded from Arrow.com.

Host Clock Generation (High-Speed Mode)

For I²C *Hs* transfers, there is no SCL synchronization. Instead, the SCL frequency is determined by the GCLK_SERCOMx_CORE frequency (f_{GCLK}) and the High-Speed Baud setting in the Baud register (BAUD.HSBAUD). When BAUD.HSBAUDLOW=0, the HSBAUD value will determine both SCL high and SCL low. In this case the following formula determines the SCL frequency.

$$f_{SCL} = \frac{f_{GCLK}}{2 + 2 \cdot HS\,BAUD}$$

When HSBAUDLOW is non-zero, the following formula determines the SCL frequency.

$$f_{SCL} = \frac{f_{GCLK}}{2 + HS\,BAUD + HSBAUDLOW}$$

Note: The I²C standard *Hs* (High-speed) requires a nominal high to low SCL ratio of 1:2, and HSBAUD should be set accordingly. At a minimum, BAUD.HSBAUD and/or BAUD.HSBAUDLOW must be non-zero.

28.6.2.4.2 Transmitting Address Packets

The I²C host starts a bus transaction by writing the I²C client address to ADDR.ADDR and the direction bit, as described in 28.6.1 Principle of Operation. If the bus is busy, the I²C host will wait until the bus becomes idle before continuing the operation. When the bus is idle, the I²C host will issue a start condition on the bus. The I²C host will then transmit an address packet using the address written to ADDR.ADDR. After the address packet has been transmitted by the I²C host, one of four cases will arise according to arbitration and transfer direction.

Case 1: Arbitration lost or bus error during address packet transmission

If arbitration was lost during transmission of the address packet, the Host on Bus bit in the Interrupt Flag Status and Clear register (INTFLAG.MB) and the Arbitration Lost bit in the Status register (STATUS.ARBLOST) are both set. Serial data output to SDA is disabled, and the SCL is released, which disables clock stretching. In effect the I²C host is no longer allowed to execute any operation on the bus until the bus is idle again. A bus error will behave similarly to the Arbitration Lost condition. In this case, the MB Interrupt flag and Host Bus Error bit in the Status register (STATUS.BUSERR) are both set in addition to STATUS.ARBLOST.

The Host Received Not Acknowledge bit in the Status register (STATUS.RXNACK) will always contain the last successfully received acknowledge or not acknowledge indication.

In this case, software will typically inform the application code of the condition and then clear the Interrupt flag before exiting the interrupt routine. No other flags have to be cleared at this moment, because all flags will be cleared automatically the next time the ADDR.ADDR register is written.

Case 2: Address packet transmit complete – No ACK received

If there is no I²C client device responding to the address packet, then the INTFLAG.MB Interrupt flag and STATUS.RXNACK will be set. The clock hold is active at this point, preventing further activity on the bus.

The missing ACK response can indicate that the I²C client is busy with other tasks or sleeping. Therefore, it is not able to respond. In this event, the next step can be either issuing a Stop condition (recommended) or resending the address packet by a repeated Start condition. When using SMBus logic, the client must ACK the address. If there is no response, it means that the client is not available on the bus.

Case 3: Address packet transmit complete – Write packet, Host on Bus set

If the I²C host receives an acknowledge response from the I²C client, INTFLAG.MB will be set and STATUS.RXNACK will be cleared. The clock hold is active at this point, preventing further activity on the bus.

In this case, the software implementation becomes highly protocol dependent. Three possible actions can enable the I²C operation to continue:

- Initiate a data transmit operation by writing the data byte to be transmitted into DATA.DATA.
- Transmit a new address packet by writing ADDR.ADDR. A repeated Start condition will automatically be inserted before the address packet.
- Issue a Stop condition, consequently terminating the transaction.

Case 4: Address packet transmit complete – Read packet, Client on Bus set

Downloaded from Arrow.com.

If the I²C host receives an ACK from the I²C client, the I²C host proceeds to receive the next byte of data from the I²C client. When the first data byte is received, the Client on Bus bit in the Interrupt Flag register (INTFLAG.SB) will be set and STATUS.RXNACK will be cleared. The clock hold is active at this point, preventing further activity on the bus.

In this case, the software implementation becomes highly protocol dependent. Three possible actions can enable the I²C operation to continue:

- Let the I²C host continue to read data by acknowledging the data received. ACK can be sent by software, or automatically in Smart mode.
- Transmit a new address packet.
- Terminate the transaction by issuing a Stop condition.

Note: An ACK or NACK will be automatically transmitted if Smart mode is enabled. The Acknowledge Action bit in the Control B register (CTRLB.ACKACT) determines whether ACK or NACK should be sent.

28.6.2.4.3 Transmitting Data Packets

When an address packet with direction Host Write (see Figure 28-3) was transmitted successfully , INTFLAG.MB will be set. The I²C host will start transmitting data via the I²C bus by writing to DATA.DATA, and monitor continuously for packet collisions.

If a collision is detected, the I²C host will lose arbitration and STATUS.ARBLOST will be set. If the transmit was successful, the I²C host will receive an ACK bit from the I²C client, and STATUS.RXNACK will be cleared. INTFLAG.MB will be set in both cases, regardless of arbitration outcome.

It is recommended to read STATUS.ARBLOST and handle the arbitration lost condition in the beginning of the I²C Host on Bus interrupt. This can be done as there is no difference between handling address and data packet arbitration.

STATUS.RXNACK must be checked for each data packet transmitted before the next data packet transmission can commence. The I²C host is not allowed to continue transmitting data packets if a NACK is received from the I²C client.

28.6.2.4.4 Receiving Data Packets (SCLSM=0)

When INTFLAG.SB is set, the I²C host will already have received one data packet. The I²C host must respond by sending either an ACK or NACK. Sending a NACK may be unsuccessful when arbitration is lost during the transmission. In this case, a lost arbitration will prevent setting INTFLAG.SB. Instead, INTFLAG.MB will indicate a change in arbitration. Handling of lost arbitration is the same as for data bit transmission.

28.6.2.4.5 Receiving Data Packets (SCLSM=1)

When INTFLAG.SB is set, the I²C host will already have received one data packet and transmitted an ACK or NACK, depending on CTRLB.ACKACT. At this point, CTRLB.ACKACT must be set to the correct value for the next ACK bit, and the transaction can continue by reading DATA and issuing a command if not in the Smart mode.

28.6.2.4.6 High-Speed Mode

High-speed transfers are a multi-step process, see High Speed Transfer.

First, a host code (0b00001nnn, where 'nnn' is a unique host code) is transmitted in Full-speed mode, followed by a NACK since no client should acknowledge. Arbitration is performed only during the Full-speed Host Code phase. The host code is transmitted by writing the host code to the Address register (ADDR.ADDR) and writing the High-speed bit (ADDR.HS) to '0'.

After the host code and NACK have been transmitted, the host write interrupt will be asserted. In the meanwhile, the client address can be written to the ADDR.ADDR register together with ADDR.HS=1. Now in High-speed mode, the host will generate a repeated start, followed by the client address with RW-direction. The bus will remain in High-speed mode until a stop is generated. If a repeated start is desired, the ADDR.HS bit must again be written to '1', along with the new address ADDR.ADDR to be transmitted.

Downloaded from Arrow.com.

Figure 28-8. High Speed Transfer

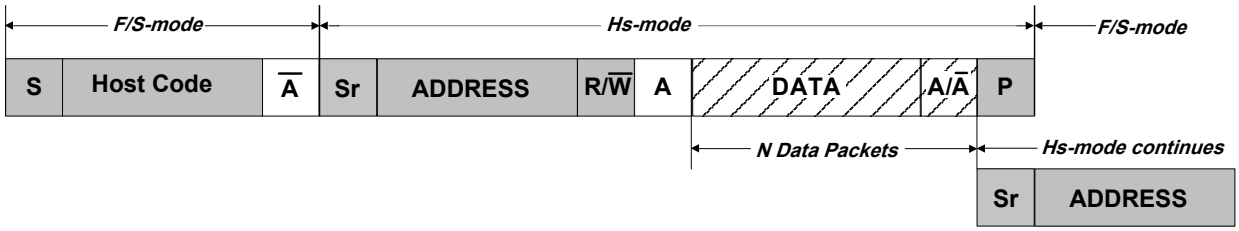

Transmitting in High-speed mode requires the I²C host to be configured in High-speed mode (CTRLA.SPEED=0x2) and the SCL Clock Stretch mode (CTRLA.SCLSM) bit set to '1'.

28.6.2.4.7 10-Bit Addressing

When 10-bit addressing is enabled by the Ten Bit Addressing Enable bit in the Address register (ADDR.TENBITEN=1) and the Address bit field ADDR.ADDR is written, the two address bytes will be transmitted, see 10-bit Address Transmission for a Read Transaction. The addressed client acknowledges the two address bytes, and the transaction continues. Regardless of whether the transaction is a read or write, the host must start by sending the 10-bit address with the direction bit (ADDR.ADDR[0]) being zero.

If the host receives a NACK after the first byte, the Write Interrupt flag will be raised and the STATUS.RXNACK bit will be set. If the first byte is acknowledged by one or more clients, then the host will proceed to transmit the second address byte and the host will first see the Write Interrupt flag after the second byte is transmitted. If the transaction direction is read-from-client, the 10-bit address transmission must be followed by a repeated start and the first 7 bits of the address with the read/write bit equal to '1'.

Figure 28-9. 10-bit Address Transmission for a Read Transaction

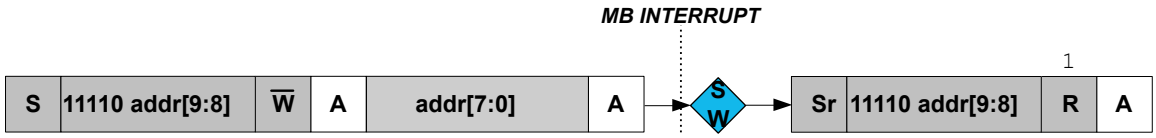

This implies the following procedure for a 10-bit read operation:

1. Write the 10-bit address to ADDR.ADDR[10:1]. ADDR.TENBITEN must be '1', the direction bit (ADDR.ADDR[0]) must be '0' (can be written simultaneously with ADDR).
2. Once the Host on Bus interrupt is asserted, Write ADDR[7:0] register to '11110 `address[9:8]` 1'. ADDR.TENBITEN must be cleared (can be written simultaneously with ADDR).
3. Proceed to transmit data.

28.6.2.5 I²C Client Operation

The I²C client is byte-oriented and interrupt-based. The number of interrupts generated is kept at a minimum by automatic handling of most events. The software driver complexity and code size are reduced by auto-triggering of operations, and a special smart mode, which can be enabled by the Smart Mode Enable bit in the Control B register (CTRLB.SMEN).

The I²C client has two interrupt strategies.

When SCL Stretch Mode bit (CTRLA.SCLSM) is '0', SCL is stretched before or after the acknowledge bit. In this mode, the I²C client operates according to the following figure. The circles labeled "S*n*" (S1, S2..) indicate the nodes the bus logic can jump to, based on software or hardware interaction.

This diagram is used as reference for the description of the I²C client operation throughout the document.

Downloaded from Arrow.com.

Figure 28-10. I²C Client Behavioral Diagram (SCLSM=0)

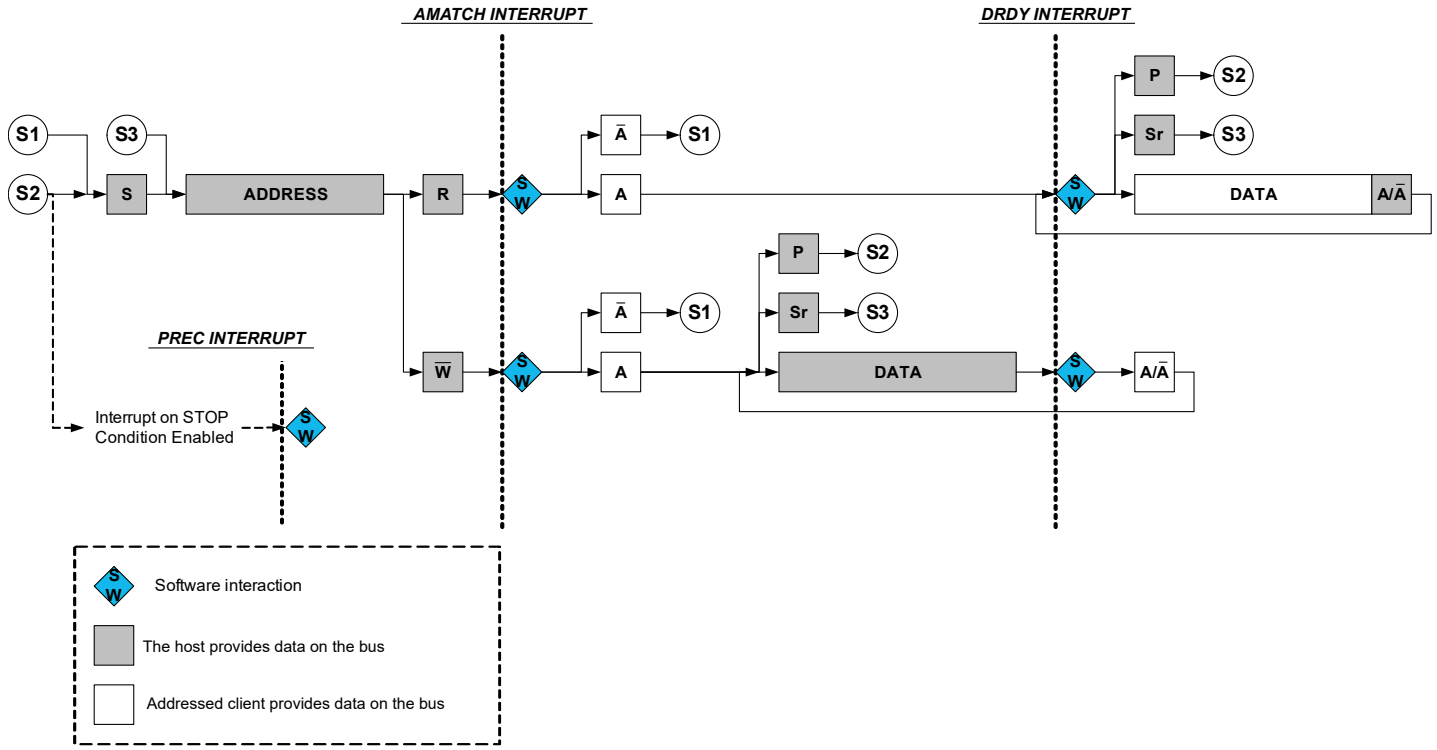

In the second strategy (CTRLA.SCLSM=1), interrupts only occur after the ACK bit is sent as shown in the following figure. This strategy can be used when it is not necessary to check DATA before acknowledging. For host reads, an address and data interrupt will be issued simultaneously after the address acknowledge. However, for host writes, the first data interrupt will be seen after the first data byte has been received by the client and the acknowledge bit has been sent to the host.

Note: For I²C High-speed mode (*Hs*), SCLSM=1 is required.

Figure 28-11. I²C Client Behavioral Diagram (SCLSM=1)

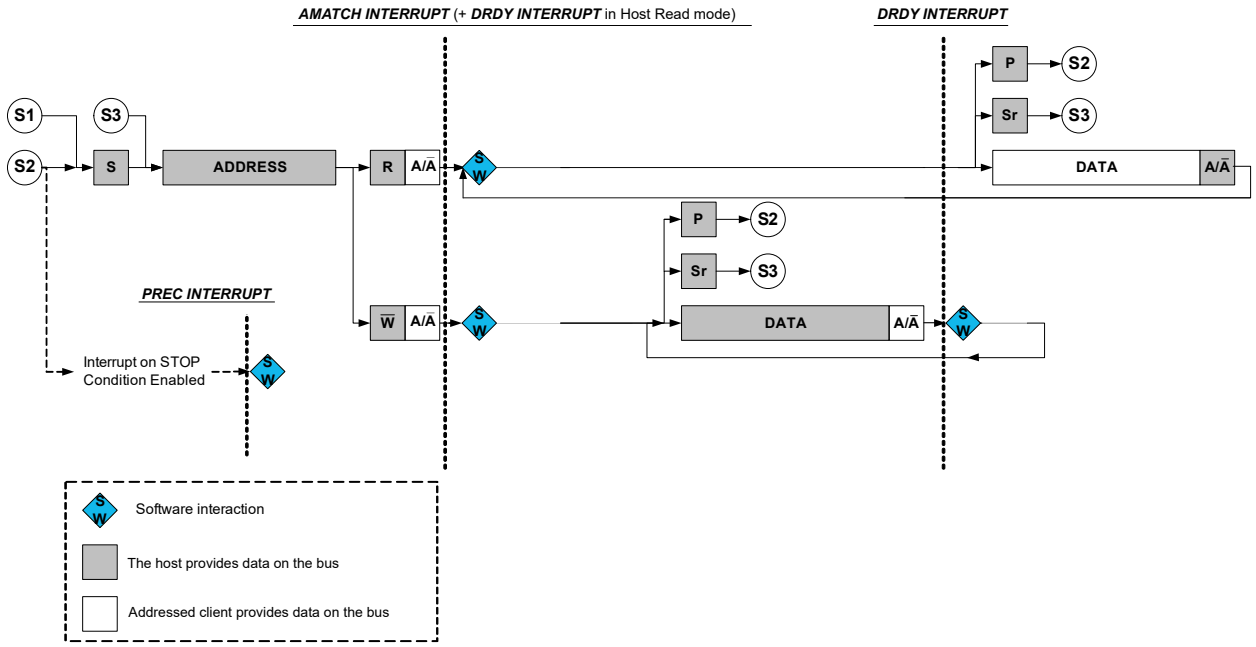

Downloaded from Arrow.com.

28.6.2.5.1 Receiving Address Packets (SCLSM=0)

When CTRLA.SCLSM=0, the I²C client stretches the SCL line according to Figure 28-10. When the I²C client is properly configured, it will wait for a Start condition.

When a Start condition is detected, the successive address packet will be received and checked by the address match logic. If the received address is not a match, the packet will be rejected, and the I²C client will wait for a new Start condition. If the received address is a match, the Address Match bit in the Interrupt Flag register (INTFLAG.AMATCH) will be set.

SCL will be stretched until the I²C client clears INTFLAG.AMATCH. As the I²C client holds the clock by forcing SCL low, the software has unlimited time to respond.

The direction of a transaction is determined by reading the Read/Write Direction bit in the Status register (STATUS.DIR). This bit will be updated only when a valid address packet is received.

If the Transmit Collision bit in the Status register (STATUS.COLL) is set, this indicates that the last packet addressed to the I²C client had a packet collision. A collision causes the SDA and SCL lines to be released without any notification to software. Therefore, the next AMATCH interrupt is the first indication of the previous packet's collision. Collisions are intended to follow the SMBus Address Resolution Protocol (ARP).

After the address packet has been received from the I²C host, one of two cases will arise based on transfer direction.

Case 1: Address packet accepted – Read flag set

The STATUS.DIR bit is '1', indicating an I²C host read operation. The SCL line is forced low, stretching the bus clock. If an ACK is sent, I²C client hardware will set the Data Ready bit in the Interrupt Flag register (INTFLAG.DRDY), indicating data are needed for transmit. If a NACK is sent, the I²C client will wait for a new Start condition and address match.

Typically, software will immediately acknowledge the address packet by sending an ACK/NACK bit. The I²C client Command bit field in the Control B register (CTRLB.CMD) can be written to '0x3' for both read and write operations as the command execution is dependent on the STATUS.DIR bit. Writing '1' to INTFLAG.AMATCH will also cause an ACK/NACK to be sent corresponding to the CTRLB.ACKACT bit.

Case 2: Address packet accepted – Write flag set

The STATUS.DIR bit is cleared, indicating an I²C host write operation. The SCL line is forced low, stretching the bus clock. If an ACK is sent, the I²C client will wait for data to be received. Data, repeated start or stop can be received.

If a NACK is sent, the I²C client will wait for a new Start condition and address match. Typically, software will immediately acknowledge the address packet by sending an ACK/NACK. The I²C client command CTRLB.CMD = 3 can be used for both read and write operation as the command execution is dependent on STATUS.DIR.

Writing '1' to INTFLAG.AMATCH will also cause an ACK/NACK to be sent corresponding to the CTRLB.ACKACT bit.

28.6.2.5.2 Receiving Address Packets (SCLSM=1)

When SCLSM=1, the I²C client will stretch the SCL line only after an ACK, see Client Behavioral Diagram (SCLSM=1). When the I²C client is properly configured, it will wait for a Start condition to be detected.

When a Start condition is detected, the successive address packet will be received and checked by the address match logic.

If the received address is not a match, the packet will be rejected and the I²C client will wait for a new Start condition.

If the address matches, the acknowledge action as configured by the Acknowledge Action bit Control B register (CTRLB.ACKACT) will be sent and the Address Match bit in the Interrupt Flag register (INTFLAG.AMATCH) is set. SCL will be stretched until the I²C client clears INTFLAG.AMATCH. As the I²C client holds the clock by forcing SCL low, the software is given unlimited time to respond to the address.

The direction of a transaction is determined by reading the Read/Write Direction bit in the Status register (STATUS.DIR). This bit will be updated only when a valid address packet is received.

If the Transmit Collision bit in the Status register (STATUS.COLL) is set, the last packet addressed to the I²C client had a packet collision. A collision causes the SDA and SCL lines to be released without any notification to software. The next AMATCH interrupt is, therefore, the first indication of the previous packet's collision. Collisions are intended to follow the SMBus Address Resolution Protocol (*ARP*).

After the address packet has been received from the I²C host, INTFLAG.AMATCH be set to '1' to clear it.

Downloaded from Arrow.com.

28.6.2.5.3 Receiving and Transmitting Data Packets

After the I²C client has received an address packet, it will respond according to the direction either by waiting for the data packet to be received or by starting to send a data packet by writing to DATA.DATA. When a data packet is received or sent, INTFLAG.DRDY will be set. After receiving data, the I²C client will send an acknowledge according to CTRLB.ACKACT.

Case 1: Data received

INTFLAG.DRDY is set, and SCL is held low, pending for SW interaction.

Case 2: Data sent

When a byte transmission is successfully completed, the INTFLAG.DRDY Interrupt flag is set. If NACK is received, indicated by STATUS.RXNACK=1, the I²C client must expect a stop or a repeated start to be received. The I²C client must release the data line to allow the I²C host to generate a stop or repeated start. Upon detecting a Stop condition, the Stop Received bit in the Interrupt Flag register (INTFLAG.PREC) will be set and the I²C client will return to IDLE state.

28.6.2.5.4 High-Speed Mode

When the I²C client is configured in High-speed mode (*Hs*, CTRLA.SPEED=0x2) and CTRLA.SCLSM=1, switching between Full-speed and High-speed modes is automatic. When the client recognizes a START followed by a host code transmission and a NACK, it automatically switches to High-speed mode and sets the High-speed status bit (STATUS.HS). The client will then remain in High-speed mode until a STOP is received.

28.6.2.5.5 10-Bit Addressing

When 10-bit addressing is enabled (ADDR.TENBITEN=1), the two address bytes following a START will be checked against the 10-bit client address recognition. The first byte of the address will always be acknowledged, and the second byte will raise the address Interrupt flag, see 10-bit Addressing.

If the transaction is a write, then the 10-bit address will be followed by *N* data bytes.

If the operation is a read, the 10-bit address will be followed by a repeated START and reception of '11110 `ADDR[9:8]` 1', and the second address interrupt will be received with the DIR bit set. The client matches on the second address as it was addressed by the previous 10-bit address.

Figure 28-12. 10-bit Addressing

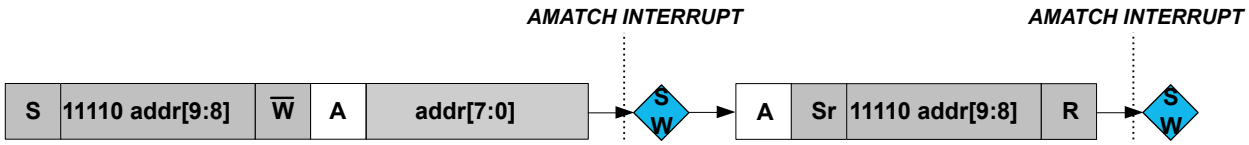

28.6.2.5.6 PMBus Group Command

When the PMBus Group Command bit in the CTRLB register is set (CTRLB.GCMD=1) and 7-bit addressing is used, INTFLAG.PREC will be set if the client has been addressed since the last STOP condition. When CTRLB.GCMD=0, a STOP condition without address match will not be set INTFLAG.PREC.

The group command protocol is used to send commands to more than one device. The commands are sent in one continuous transmission with a single STOP condition at the end. When the STOP condition is detected by the clients addressed during the group command, they all begin executing the command they received.

The following figure shows an example where this client, bearing ADDRESS 1, is addressed after a repeated START condition. There can be multiple clients addressed before and after this client. Eventually, at the end of the group command, a single STOP is generated by the host. At this point a STOP interrupt is asserted.

Downloaded from Arrow.com.

Figure 28-13. PMBus Group Command Example

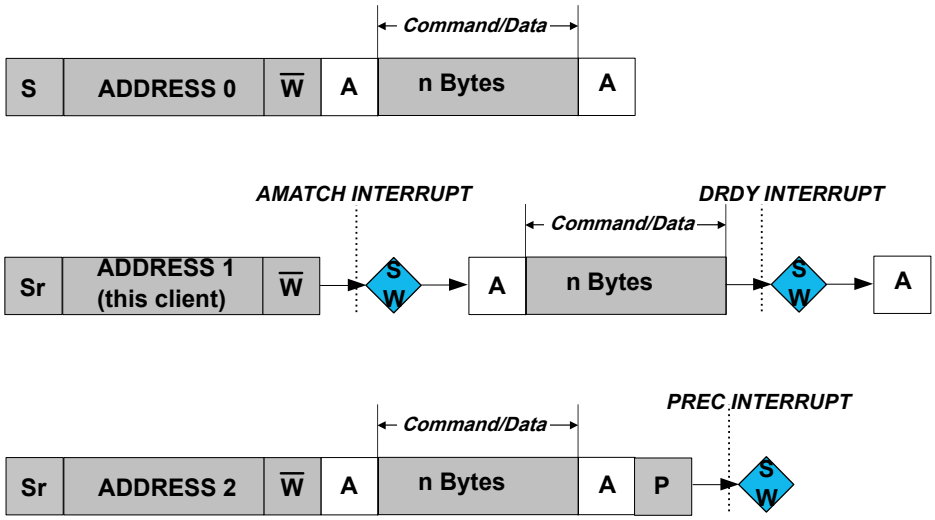

28.6.3 Additional Features

28.6.3.1 SMBus

The I²C includes three hardware SCL low time-outs which allow a time-out to occur for SMBus SCL low time-out, host extend time-out, and client extend time-out. This allows for SMBus functionality These time-outs are driven by the GCLK_SERCOM_SLOW clock. The GCLK_SERCOM_SLOW clock is used to accurately time the time-out and must be configured to use a 32KHz oscillator. The I²C interface also allows for a SMBus compatible SDA hold time.

- $T_{TIMEOUT}$: SCL low time of 25..35ms – Measured for a single SCL low period. It is enabled by CTRLA.LOWTOUTEN.
- $T_{LOW:SEXT}$: Cumulative clock low extend time of 25 ms – Measured as the cumulative SCL low extend time by a client device in a single message from the initial START to the STOP. It is enabled by CTRLA.SEXTTOEN.
- $T_{LOW:MEXT}$: Cumulative clock low extend time of 10 ms – Measured as the cumulative SCL low extend time by the host device within a single byte from START-to-ACK, ACK-to-ACK, or ACK-to-STOP. It is enabled by CTRLA.MEXTTOEN.

28.6.3.2 Smart Mode

The I²C interface has a smart mode that simplifies application code and minimizes the user interaction needed to adhere to the I²C protocol. The smart mode accomplishes this by automatically issuing an ACK or NACK (based on the content of CTRLB.ACKACT) as soon as DATA.DATA is read.

28.6.3.3 4-Wire Mode

Writing a '1' to the Pin Usage bit in the Control A register (CTRLA.PINOUT) will enable 4-wire mode operation. In this mode, the internal I²C tri-state drivers are bypassed, and an external I²C compliant tri-state driver is needed when connecting to an I²C bus.

Figure 28-14. I²C Pad Interface

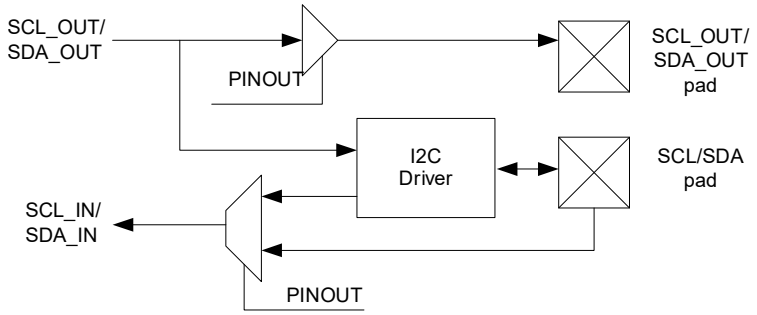

Downloaded from Arrow.com.

28.6.3.4 Quick Command

Setting the Quick Command Enable bit in the Control B register (CTRLB.QCEN) enables quick command. When quick command is enabled, the corresponding Interrupt flag (INTFLAG.SB or INTFLAG.MB) is set immediately after the client acknowledges the address. At this point, the software can either issue a Stop command or a repeated start by writing CTRLB.CMD or ADDR.ADDR.

28.6.4 DMA, Interrupts and Events

Each interrupt source has its own Interrupt flag. The Interrupt flag in the Interrupt Flag Status and Clear register (INTFLAG) will be set when the Interrupt condition is meet. Each interrupt can be individually enabled by writing '1' to the corresponding bit in the Interrupt Enable Set register (INTENSET), and disabled by writing '1' to the corresponding bit in the Interrupt Enable Clear register (INTENCLR). An interrupt request is generated when the Interrupt flag is set and the corresponding interrupt is enabled. The interrupt request is active until the Interrupt flag is cleared, the interrupt is disabled or the I^{2}C is reset. See the INTFLAG (Client) or INTFLAG (Host) register for details on how to clear Interrupt flags.

Table 28-1. Module Request for SERCOM I^{2}C Client

Condition	Request		
	DMA	Interrupt	Event
Data needed for transmit (TX) (Client Transmit mode)	Yes (request cleared when data is written)		NA
Data received (RX) (Client Receive mode)	Yes (request cleared when data is read)		
Data Ready (DRDY)		Yes	
Address Match (AMATCH)		Yes	
Stop received (PREC)		Yes	
Error (ERROR)		Yes	

Table 28-2. Module Request for SERCOM I^{2}C Host

Condition	Request		
	DMA	Interrupt	Event
Data needed for transmit (TX) (Host Transmit mode)	Yes (request cleared when data is written)		NA
Data needed for transmit (RX) (Host Transmit mode)	Yes (request cleared when data is read)		
Host on Bus (MB)		Yes	
Stop received (SB)		Yes	
Error (ERROR)		Yes	

28.6.4.1 DMA Operation

Smart mode must be enabled for DMA operation in the Control B register by writing CTRLB.SMEN=1.

Downloaded from Arrow.com.

28.6.4.1.1 Client DMA

When using the I²C client with DMA, an address match will cause the address Interrupt flag (INTFLAG.ADDRMATCH) to be raised. After the interrupt has been serviced, data transfer will be performed through DMA.

The I²C client generates the following requests:

- Write data received (RX): The request is set when host write data is received. The request is cleared when DATA is read.
- Read data needed for transmit (TX): The request is set when data is needed for a host read operation. The request is cleared when DATA is written.

28.6.4.1.2 Host DMA

When using the I²C host with DMA, the ADDR register must be written with the desired address (ADDR.ADDR), transaction length (ADDR.LEN), and transaction length enable (ADDR.LENEN). When ADDR.LENEN is written to 1 along with ADDR.ADDR, ADDR.LEN determines the number of data bytes in the transaction from 0 to 255. DMA is then used to transfer ADDR.LEN bytes followed by an automatically generated NACK (for host reads) and a STOP.

If a NACK is received by the client for a host write transaction before ADDR.LEN bytes, a STOP will be automatically generated and the length error (STATUS.LENERR) will be raised along with the INTFLAG.ERROR interrupt.

The I²C host generates the following requests:

- Read data received (RX): The request is set when host read data is received. The request is cleared when DATA is read.
- Write data needed for transmit (TX): The request is set when data is needed for a host write operation. The request is cleared when DATA is written.

28.6.4.2 Interrupts

The I²C client has the following interrupt sources. These are asynchronous interrupts. They can wake-up the device from any Sleep mode:

- Error (ERROR)
- Data Ready (DRDY)
- Address Match (AMATCH)
- Stop Received (PREC)

The I²C host has the following interrupt sources. These are asynchronous interrupts. They can wake-up the device from any Sleep mode:

- Error (ERROR)
- Client on Bus (SB)
- Host on Bus (MB)

Each interrupt source has its own Interrupt flag. The Interrupt flag in the Interrupt Flag Status and Clear register (INTFLAG) will be set when the Interrupt condition is meet. Each interrupt can be individually enabled by writing '1' to the corresponding bit in the Interrupt Enable Set register (INTENSET), and disabled by writing '1' to the corresponding bit in the Interrupt Enable Clear register (INTENCLR).

The status of enabled interrupts can be read from either INTENSET or INTENCLR. An interrupt request is generated when the Interrupt flag is set and the corresponding interrupt is enabled. The interrupt request active until the Interrupt flag is cleared, the interrupt is disabled or the I²C is reset. See the INTFLAG register for details on how to clear Interrupt flags.

The value of INTFLAG indicates which interrupt is executed. Note that interrupts must be globally enabled for interrupt requests. Refer to *Nested Vector Interrupt Controller* for details.

Related Links

11.2 Nested Vector Interrupt Controller

28.6.4.3 Events

Not applicable.

Downloaded from Arrow.com.

28.6.5 Sleep Mode Operation

I²C Host Operation

The generic clock (GCLK_SERCOMx_CORE) will continue to run in idle sleep mode. If the Run In Standby bit in the Control A register (CTRLA.RUNSTDBY) is '1', the GLK_SERCOMx_CORE will also run in Standby Sleep mode. Any interrupt can wake-up the device.

If CTRLA.RUNSTDBY=0, the GLK_SERCOMx_CORE will be disabled after any ongoing transaction is finished. Any interrupt can wake-up the device.

I²C Client Operation

Writing CTRLA.RUNSTDBY=1 will allow the Address Match interrupt to wake-up the device.

When CTRLA.RUNSTDBY=0, all receptions will be dropped.

28.6.6 Synchronization

Due to asynchronicity between the main clock domain and the peripheral clock domains, some registers need to be synchronized when written or read.

The following bits are synchronized when written:

- Software Reset bit in the CTRLA register (CTRLA.SWRST)
- Enable bit in the CTRLA register (CTRLA.ENABLE)
- Command bits in CTRLB register (CTRLB.CMD)
- Write to Bus State bits in the Status register (STATUS.BUSSTATE)
- Address bits in the Address register (ADDR.ADDR) when in host operation.

The following registers are synchronized when written:

- Data (DATA) when in host operation

Required write-synchronization is denoted by the "Write-Synchronized" property in the register description.

Related Links

14.3 Register Synchronization

Downloaded from Arrow.com.

28.7 Register Summary - I2C Client

Offset	Name	Bit Pos.	7	6	5	4	3	2	1	0
0x00	CTRLA	7:0	RUNSTDBY			MODE[2:0]			ENABLE	SWRST
		15:8								
		23:16	SEXTTOEN		SDAHOLD[1:0]					PINOUT
		31:24		LOWTOUTEN			SCLSM		SPEED[1:0]	
0x04	CTRLB	7:0								
		15:8	AMODE[1:0]					AACKEN	GCMD	SMEN
		23:16						ACKACT	CMD[1:0]	
		31:24								
0x08 ... 0x13	Reserved									
0x14	INTENCLR	7:0	ERROR					DRDY	AMATCH	PREC
0x15	Reserved									
0x16	INTENSET	7:0	ERROR					DRDY	AMATCH	PREC
0x17	Reserved									
0x18	INTFLAG	7:0	ERROR					DRDY	AMATCH	PREC
0x19	Reserved									
0x1A	STATUS	7:0	CLKHOLD	LOWTOUT		SR	DIR	RXNACK	COLL	BUSERR
		15:8						HS	SEXTTOUT	
0x1C	SYNCBUSY	7:0							ENABLE	SWRST
		15:8								
		23:16								
		31:24								
0x20 ... 0x23	Reserved									
0x24	ADDR	7:0	ADDR[6:0]							GENCEN
		15:8	TENBITEN					ADDR[9:7]		
		23:16	ADDRMASK[6:0]							
		31:24						ADDRMASK[9:7]		
0x28	DATA	7:0	DATA[7:0]							
		15:8								

28.8 Register Description - I2C Client

Registers can be 8, 16, or 32 bits wide. Atomic 8-, 16- and 32-bit accesses are supported. In addition, the 8-bit quarters and 16-bit halves of a 32-bit register, and the 8-bit halves of a 16-bit register can be accessed directly.

Some registers are optionally write-protected by the Peripheral Access Controller (PAC). Optional PAC write-protection is denoted by the "PAC Write-Protection" property in each individual register description. For details, refer to Register Access Protection.

Some registers are synchronized when read and/or written. Synchronization is denoted by the "Write-Synchronized" or the "Read-Synchronized" property in each individual register description. For details, refer to 28.6.6 Synchronization.

Some registers are enable-protected, meaning they can only be written when the peripheral is disabled. Enable-protection is denoted by the "Enable-Protected" property in each individual register description.

Downloaded from Arrow.com.

28.8.1 Control A

Name: CTRLA
Offset: 0x00
Reset: 0x00000000
Property: PAC Write-Protection, Enable-Protected, Write-Synchronized

Bit	31	30	29	28	27	26	25	24
		LOWTOUTEN			SCLSM		SPEED[1:0]	
Access		R/W			R/W		R/W	R/W
Reset		0			0		0	0

Bit	23	22	21	20	19	18	17	16
	SEXTTOEN		SDAHOLD[1:0]					PINOUT
Access	R/W		R/W	R/W				R/W
Reset	0		0	0				0

Bit	15	14	13	12	11	10	9	8
Access								
Reset								

Bit	7	6	5	4	3	2	1	0
	RUNSTDBY			MODE[2:0]			ENABLE	SWRST
Access	R/W			R/W	R/W	R/W	R/W	R/W
Reset	0			0	0	0	0	0

Bit 30 – LOWTOUTEN SCL Low Time-Out
This bit enables the SCL low time-out. If SCL is held low for 25ms-35ms, the client will release its clock hold, if enabled, and reset the internal state machine. Any interrupt flags set at the time of time-out will remain set.
This bit is not synchronized.

Value	Description
0	Time-out disabled.
1	Time-out enabled.

Bit 27 – SCLSM SCL Clock Stretch Mode
This bit controls when SCL will be stretched for software interaction.
This bit is not synchronized.

Value	Description
0	SCL stretch according to Figure 28-10
1	SCL stretch only after ACK bit according to Figure 28-11

Bits 25:24 – SPEED[1:0] Transfer Speed
These bits define bus speed.
These bits are not synchronized.

Value	Description
0x0	Standard-mode (Sm) up to 100 kHz and Fast-mode (Fm) up to 400 kHz
0x1	Fast-mode Plus (Fm+) up to 1 MHz
0x2	High-speed mode (Hs-mode) up to 3.4 MHz
0x3	Reserved

Bit 23 – SEXTTOEN Client SCL Low Extend Time-Out
This bit enables the client SCL low extend time-out. If SCL is cumulatively held low for greater than 25ms from the initial START to a STOP, the client will release its clock hold if enabled and reset the internal state machine. Any interrupt flags set at the time of time-out will remain set. If the address was recognized, PREC will be set when a STOP is received.

Downloaded from Arrow.com.

This bit is not synchronized.

Value	Description
0	Time-out disabled
1	Time-out enabled

Bits 21:20 – SDAHOLD[1:0] SDA Hold Time
These bits define the SDA hold time with respect to the negative edge of SCL.
These bits are not synchronized.

Value	Name	Description
0x0	DIS	Disabled
0x1	75	50-100ns hold time
0x2	450	300-600ns hold time
0x3	600	400-800ns hold time

Bit 16 – PINOUT Pin Usage
This bit sets the pin usage to either two- or four-wire operation:
This bit is not synchronized.

Value	Description
0	4-wire operation disabled
1	4-wire operation enabled

Bit 7 – RUNSTDBY Run in Standby
This bit defines the functionality in standby sleep mode.
This bit is not synchronized.

Value	Description
0	Disabled – All reception is dropped.
1	Wake on address match, if enabled.

Bits 4:2 – MODE[2:0] Operating Mode
These bits must be written to 0x04 to select the I^2C client serial communication interface of the SERCOM.
These bits are not synchronized.

Bit 1 – ENABLE Enable
Due to synchronization, there is delay from writing CTRLA.ENABLE until the peripheral is enabled/disabled. The value written to CTRL.ENABLE will read back immediately and the Enable Synchronization Busy bit in the Synchronization Busy register (SYNCBUSY.ENABLE) will be set. SYNCBUSY.ENABLE will be cleared when the operation is complete.
This bit is not enable-protected.

Value	Description
0	The peripheral is disabled or being disabled.
1	The peripheral is enabled.

Bit 0 – SWRST Software Reset
Writing '0' to this bit has no effect.
Writing '1' to this bit resets all registers in the SERCOM, except DBGCTRL, to their initial state, and the SERCOM will be disabled.
Writing '1' to CTRLA.SWRST will always take precedence, meaning that all other writes in the same write-operation will be discarded. Any register write access during the ongoing reset will result in an APB error. Reading any register will return the reset value of the register.
Due to synchronization, there is a delay from writing CTRLA.SWRST until the reset is complete. CTRLA.SWRST and SYNCBUSY.SWRST will both be cleared when the reset is complete.
This bit is not enable-protected.

Value	Description
0	There is no reset operation ongoing.
1	The reset operation is ongoing.

Downloaded from Arrow.com.

28.8.2 Control B

Name: CTRLB
Offset: 0x04
Reset: 0x00000000
Property: PAC Write-Protection, Enable-Protected

Bit	31	30	29	28	27	26	25	24
Access								
Reset								

Bit	23	22	21	20	19	18	17	16
						ACKACT	CMD[1:0]	
Access						R/W	W	W
Reset						0	0	0

Bit	15	14	13	12	11	10	9	8
	AMODE[1:0]					AACKEN	GCMD	SMEN
Access	R/W	R/W				R/W	R/W	R/W
Reset	0	0				0	0	0

Bit	7	6	5	4	3	2	1	0
Access								
Reset								

Bit 18 – ACKACT Acknowledge Action
This bit defines the client's acknowledge behavior after an address or data byte is received from the host.
The acknowledge action is executed when a command is written to the CMD bits. If smart mode is enabled (CTRLB.SMEN=1), the acknowledge action is performed when the DATA register is read.
ACKACT shall not be updated more than once between each peripheral interrupts request.
This bit is not enable-protected.

Value	Description
0	Send ACK
1	Send NACK

Bits 17:16 – CMD[1:0] Command
This bit field triggers the client operation as the below. The CMD bits are strobe bits, and always read as zero.
The operation is dependent on the client interrupt flags, INTFLAG.DRDY and INTFLAG.AMATCH, in addition to STATUS.DIR.
All interrupt flags (INTFLAG.DRDY, INTFLAG.AMATCH and INTFLAG.PREC) are automatically cleared when a command is given.
This bit is not enable-protected.

Table 28-3. Command Description

CMD[1:0]	DIR	Action
0x0	X	(No action)
0x1	X	(Reserved)
0x2	Used to complete a transaction in response to a data interrupt (DRDY)	
	0 (Host write)	Execute acknowledge action succeeded by waiting for any start (S/Sr) condition
	1 (Host read)	Wait for any start (S/Sr) condition

Downloaded from Arrow.com.

.....continued		
CMD[1:0]	**DIR**	**Action**
0x3	Used in response to an address interrupt (AMATCH)	
	0 (Host write)	Execute acknowledge action succeeded by reception of next byte
	1 (Host read)	Execute acknowledge action succeeded by client data interrupt
	Used in response to a data interrupt (DRDY)	
	0 (Host write)	Execute acknowledge action succeeded by reception of next byte
	1 (Host read)	Execute a byte read operation followed by ACK/NACK reception

Bits 15:14 – AMODE[1:0] Address Mode
These bits set the addressing mode.

Value	Name	Description
0x0	MASK	The client responds to the address written in ADDR.ADDR masked by the value in ADDR.ADDRMASK. See *SERCOM – Serial Communication Interface* for additional information.
0x1	2_ADDRS	The client responds to the two unique addresses in ADDR.ADDR and ADDR.ADDRMASK.
0x2	RANGE	The client responds to the range of addresses between and including ADDR.ADDR and ADDR.ADDRMASK. ADDR.ADDR is the upper limit.
0x3	-	Reserved.

Bit 10 – AACKEN Automatic Acknowledge Enable
This bit enables the address to be automatically acknowledged if there is an address match.

Value	Description
0	Automatic acknowledge is disabled.
1	Automatic acknowledge is enabled.

Bit 9 – GCMD PMBus Group Command
This bit enables PMBus group command support. When enabled, the Stop Received interrupt flag (INTFLAG.PREC) will be set when a STOP condition is detected if the client has been addressed since the last STOP condition on the bus.

Value	Description
0	Group command is disabled.
1	Group command is enabled.

Bit 8 – SMEN Smart Mode Enable
When smart mode is enabled, data is acknowledged automatically when DATA.DATA is read.

Value	Description
0	Smart mode is disabled.
1	Smart mode is enabled.

Related Links
25. SERCOM – Serial Communication Interface

Downloaded from Arrow.com.

28.8.3 Interrupt Enable Clear

Name: INTENCLR
Offset: 0x14
Reset: 0x00
Property: PAC Write-Protection

This register allows the user to disable an interrupt without doing a read-modify-write operation. Changes in this register will also be reflected in the Interrupt Enable Set register (INTENSET).

Bit	7	6	5	4	3	2	1	0
	ERROR					DRDY	AMATCH	PREC
Access	R/W					R/W	R/W	R/W
Reset	0					0	0	0

Bit 7 – ERROR Error Interrupt Enable
Writing '0' to this bit has no effect.
Writing '1' to this bit will clear the Error Interrupt Enable bit, which disables the Error interrupt.

Value	Description
0	Error interrupt is disabled.
1	Error interrupt is enabled.

Bit 2 – DRDY Data Ready Interrupt Enable
Writing '0' to this bit has no effect.
Writing '1' to this bit will clear the Data Ready bit, which disables the Data Ready interrupt.

Value	Description
0	The Data Ready interrupt is disabled.
1	The Data Ready interrupt is enabled.

Bit 1 – AMATCH Address Match Interrupt Enable
Writing '0' to this bit has no effect.
Writing '1' to this bit will clear the Address Match Interrupt Enable bit, which disables the Address Match interrupt.

Value	Description
0	The Address Match interrupt is disabled.
1	The Address Match interrupt is enabled.

Bit 0 – PREC Stop Received Interrupt Enable
Writing '0' to this bit has no effect.
Writing '1' to this bit will clear the Stop Received Interrupt Enable bit, which disables the Stop Received interrupt.

Value	Description
0	The Stop Received interrupt is disabled.
1	The Stop Received interrupt is enabled.

Downloaded from Arrow.com.

28.8.4 Interrupt Enable Set

Name: INTENSET
Offset: 0x16
Reset: 0x00
Property: PAC Write-Protection

This register allows the user to enable an interrupt without doing a read-modify-write operation. Changes in this register will also be reflected in the Interrupt Enable Clear register (INTENCLR).

Bit	7	6	5	4	3	2	1	0
	ERROR					DRDY	AMATCH	PREC
Access	R/W					R/W	R/W	R/W
Reset	0					0	0	0

Bit 7 – ERROR Error Interrupt Enable
Writing '0' to this bit has no effect.
Writing '1' to this bit will set the Error Interrupt Enable bit, which enables the Error interrupt.

Value	Description
0	Error interrupt is disabled.
1	Error interrupt is enabled.

Bit 2 – DRDY Data Ready Interrupt Enable
Writing '0' to this bit has no effect.
Writing '1' to this bit will set the Data Ready bit, which enables the Data Ready interrupt.

Value	Description
0	The Data Ready interrupt is disabled.
1	The Data Ready interrupt is enabled.

Bit 1 – AMATCH Address Match Interrupt Enable
Writing '0' to this bit has no effect.
Writing '1' to this bit will set the Address Match Interrupt Enable bit, which enables the Address Match interrupt.

Value	Description
0	The Address Match interrupt is disabled.
1	The Address Match interrupt is enabled.

Bit 0 – PREC Stop Received Interrupt Enable
Writing '0' to this bit has no effect.
Writing '1' to this bit will set the Stop Received Interrupt Enable bit, which enables the Stop Received interrupt.

Value	Description
0	The Stop Received interrupt is disabled.
1	The Stop Received interrupt is enabled.

Downloaded from Arrow.com.

28.8.5 Interrupt Flag Status and Clear

Name: INTFLAG
Offset: 0x18
Reset: 0x00
Property: -

Bit	7	6	5	4	3	2	1	0
	ERROR					DRDY	AMATCH	PREC
Access	R/W					R/W	R/W	R/W
Reset	0					0	0	0

Bit 7 – ERROR Error
This bit is set when any error is detected. Errors that will set this flag have corresponding status flags in the STATUS register. The corresponding bits in STATUS are SEXTTOUT, LOWTOUT, COLL, and BUSERR.
Writing '0' to this bit has no effect.
Writing '1' to this bit will clear the flag.

Bit 2 – DRDY Data Ready
This flag is set when a I^2C client byte transmission or reception is successfully completed.
The flag is cleared by hardware when either:

- Writing to the DATA register.
- Reading the DATA register with Smart mode enabled.
- Writing a valid command to the CMD register.

Writing '0' to this bit has no effect.
Writing '1' to this bit will clear the Data Ready Interrupt flag.

Bit 1 – AMATCH Address Match
This flag is set when the I^2C client address match logic detects that a valid address has been received.
The flag is cleared by hardware when CTRL.CMD is written.
Writing '0' to this bit has no effect.
Writing '1' to this bit will clear the Address Match Interrupt flag. When cleared, an ACK/NACK will be sent according to CTRLB.ACKACT.

Bit 0 – PREC Stop Received
This flag is set when a Stop condition is detected for a transaction being processed. A Stop condition detected between a bus host and another client will not set this flag, unless the PMBus Group Command is enabled in the Control B register (CTRLB.GCMD=1).
This flag is cleared by hardware after a command is issued on the next address match.
Writing '0' to this bit has no effect.
Writing '1' to this bit will clear the Stop Received Interrupt flag.

Downloaded from Arrow.com.

28.8.6 Status

Name: STATUS
Offset: 0x1A
Reset: 0x0000
Property: -

Bit	15	14	13	12	11	10	9	8
						HS	SEXTTOUT	
Access						R/W	R/W	
Reset						0	0	

Bit	7	6	5	4	3	2	1	0
	CLKHOLD	LOWTOUT		SR	DIR	RXNACK	COLL	BUSERR
Access	R	R/W		R	R	R	R/W	R/W
Reset	0	0		0	0	0	0	0

Bit 10 – HS High-speed
This bit is set if the client detects a START followed by a Host Code transmission.
Writing a '0' to this bit has no effect.
Writing a '1' to this bit will clear the status. However, this flag is automatically cleared when a STOP is received.

Bit 9 – SEXTTOUT Client SCL Low Extend Time-Out
This bit is set if a client SCL low extend time-out occurs.
This bit is cleared automatically if responding to a new start condition with ACK or NACK (write 3 to CTRLB.CMD) or when INTFLAG.AMATCH is cleared.
Writing a '0' to this bit has no effect.
Writing a '1' to this bit will clear the status.

Value	Description
0	No SCL low extend time-out has occurred.
1	SCL low extend time-out has occurred.

Bit 7 – CLKHOLD Clock Hold
The client Clock Hold bit (STATUS.CLKHOLD) is set when the client is holding the SCL line low, stretching the I^2C clock. Software should consider this bit a read-only status flag that is set when INTFLAG.DRDY or INTFLAG.AMATCH is set.
This bit is automatically cleared when the corresponding interrupt is also cleared.

Bit 6 – LOWTOUT SCL Low Time-out
This bit is set if an SCL low time-out occurs.
This bit is cleared automatically if responding to a new start condition with ACK or NACK (write 3 to CTRLB.CMD) or when INTFLAG.AMATCH is cleared.
Writing a '0' to this bit has no effect.
Writing a '1' to this bit will clear the status.

Value	Description
0	No SCL low time-out has occurred.
1	SCL low time-out has occurred.

Bit 4 – SR Repeated Start
When INTFLAG.AMATCH is raised due to an address match, SR indicates a repeated start or start condition.
This flag is only valid while the INTFLAG.AMATCH flag is one.

Value	Description
0	Start condition on last address match
1	Repeated start condition on last address match

Downloaded from Arrow.com.

Bit 3 – DIR Read / Write Direction
The Read/Write Direction (STATUS.DIR) bit stores the direction of the last address packet received from a host.

Value	Description
0	Host write operation is in progress.
1	Host read operation is in progress.

Bit 2 – RXNACK Received Not Acknowledge
This bit indicates whether the last data packet sent was acknowledged or not.

Value	Description
0	Host responded with ACK.
1	Host responded with NACK.

Bit 1 – COLL Transmit Collision
If set, the I^2C client was not able to transmit a high data or NACK bit, the I^2C client will immediately release the SDA and SCL lines and wait for the next packet addressed to it.
This flag is intended for the SMBus address resolution protocol (ARP). A detected collision in non-ARP situations indicates that there has been a protocol violation, and should be treated as a bus error.
Note that this status will not trigger any interrupt, and should be checked by software to verify that the data were sent correctly. This bit is cleared automatically if responding to an address match with an ACK or a NACK (writing 0x3 to CTRLB.CMD), or INTFLAG.AMATCH is cleared.
Writing a '0' to this bit has no effect.
Writing a '1' to this bit will clear the status.

Value	Description
0	No collision detected on last data byte sent.
1	Collision detected on last data byte sent.

Bit 0 – BUSERR Bus Error
The Bus Error bit (STATUS.BUSERR) indicates that an illegal bus condition has occurred on the bus, regardless of bus ownership. An illegal bus condition is detected if a protocol violating start, repeated start or stop is detected on the I^2C bus lines. A start condition directly followed by a stop condition is one example of a protocol violation. If a time-out occurs during a frame, this is also considered a protocol violation, and will set STATUS.BUSERR.
This bit is cleared automatically if responding to an address match with an ACK or a NACK (writing 0x3 to CTRLB.CMD) or INTFLAG.AMATCH is cleared.
Writing a '1' to this bit will clear the status.
Writing a '0' to this bit has no effect.

Value	Description
0	No bus error detected.
1	Bus error detected.

Downloaded from Arrow.com.

28.8.7 Synchronization Busy

Name: SYNCBUSY
Offset: 0x1C
Reset: 0x00000000
Property: -

Bit	31	30	29	28	27	26	25	24
Access								
Reset								

Bit	23	22	21	20	19	18	17	16
Access								
Reset								

Bit	15	14	13	12	11	10	9	8
Access								
Reset								

Bit	7	6	5	4	3	2	1	0
							ENABLE	SWRST
Access							R	R
Reset							0	0

Bit 1 – ENABLE SERCOM Enable Synchronization Busy
Enabling and disabling the SERCOM (CTRLA.ENABLE) requires synchronization. When written, the SYNCBUSY.ENABLE bit will be set until synchronization is complete.

Value	Description
0	Enable synchronization is not busy.
1	Enable synchronization is busy.

Bit 0 – SWRST Software Reset Synchronization Busy
Resetting the SERCOM (CTRLA.SWRST) requires synchronization. When written, the SYNCBUSY.SWRST bit will be set until synchronization is complete.

Value	Description
0	SWRST synchronization is not busy.
1	SWRST synchronization is busy.

Downloaded from Arrow.com.

28.8.8 Address

Name: ADDR
Offset: 0x24
Reset: 0x00000000
Property: PAC Write-Protection, Enable-Protected

Bit	31	30	29	28	27	26	25	24
						ADDRMASK[9:7]		
Access						R/W	R/W	R/W
Reset						0	0	0

Bit	23	22	21	20	19	18	17	16
	ADDRMASK[6:0]							
Access	R/W	R/W	R/W	R/W	R/W	R/W	R/W	
Reset	0	0	0	0	0	0	0	

Bit	15	14	13	12	11	10	9	8
	TENBITEN					ADDR[9:7]		
Access	R/W					R/W	R/W	R/W
Reset	0					0	0	0

Bit	7	6	5	4	3	2	1	0
	ADDR[6:0]							GENCEN
Access	R/W	R/W	R/W	R/W	R/W	R/W	R/W	R/W
Reset	0	0	0	0	0	0	0	0

Bits 26:17 – ADDRMASK[9:0] Address Mask
These bits act as a second address match register, an address mask register or the lower limit of an address range, depending on the CTRLB.AMODE setting.

Bit 15 – TENBITEN Ten Bit Addressing Enable

Value	Description
0	10-bit address recognition disabled.
1	10-bit address recognition enabled.

Bits 10:1 – ADDR[9:0] Address
These bits contain the I^2C client address used by the client address match logic to determine if a host has addressed the client.
When using 7-bit addressing, the client address is represented by ADDR[6:0].
When using 10-bit addressing (ADDR.TENBITEN=1), the client address is represented by ADDR[9:0]
When the address match logic detects a match, INTFLAG.AMATCH is set and STATUS.DIR is updated to indicate whether it is a read or a write transaction.

Bit 0 – GENCEN General Call Address Enable
A general call address is an address consisting of all-zeroes, including the direction bit (host write).

Value	Description
0	General call address recognition disabled.
1	General call address recognition enabled.

Downloaded from Arrow.com.

28.8.9 Data

Name: DATA
Offset: 0x28
Reset: 0x0000
Property: -

Bit	15	14	13	12	11	10	9	8
Access								
Reset								

Bit	7	6	5	4	3	2	1	0
	DATA[7:0]							
Access	R/W	R/W	R/W	R/W	R/W	R/W	R/W	R/W
Reset	0	0	0	0	0	0	0	0

Bits 7:0 – DATA[7:0] Data
The client data register I/O location (DATA.DATA) provides access to the host transmit and receive data buffers. Reading valid data or writing data to be transmitted can be successfully done only when SCL is held low by the client (STATUS.CLKHOLD is set). An exception occurs when reading the last data byte after the stop condition has been received.
Accessing DATA.DATA auto-triggers I^2C bus operations. The operation performed depends on the state of CTRLB.ACKACT, CTRLB.SMEN and the type of access (read/write).

Downloaded from Arrow.com.

28.9 Register Summary - I2C Host

Offset	Name	Bit Pos.	7	6	5	4	3	2	1	0
0x00	CTRLA	7:0	RUNSTDBY			MODE[2:0]			ENABLE	SWRST
		15:8								
		23:16	SEXTTOEN	MEXTTOEN	SDAHOLD[1:0]					PINOUT
		31:24		LOWTOUTEN	INACTOUT[1:0]		SCLSM		SPEED[1:0]	
0x04	CTRLB	7:0								
		15:8							QCEN	SMEN
		23:16						ACKACT	CMD[1:0]	
		31:24								
0x08 ... 0x0B	Reserved									
0x0C	BAUD	7:0	BAUD[7:0]							
		15:8	BAUDLOW[7:0]							
		23:16	HSBAUD[7:0]							
		31:24	HSBAUDLOW[7:0]							
0x10 ... 0x13	Reserved									
0x14	INTENCLR	7:0	ERROR						SB	MB
0x15	Reserved									
0x16	INTENSET	7:0	ERROR						SB	MB
0x17	Reserved									
0x18	INTFLAG	7:0	ERROR						SB	MB
0x19	Reserved									
0x1A	STATUS	7:0	CLKHOLD	LOWTOUT	BUSSTATE[1:0]			RXNACK	ARBLOST	BUSERR
		15:8						LENERR	SEXTTOUT	MEXTTOUT
0x1C	SYNCBUSY	7:0						SYSOP	ENABLE	SWRST
		15:8								
		23:16								
		31:24								
0x20 ... 0x23	Reserved									
0x24	ADDR	7:0	ADDR[7:0]							
		15:8	TENBITEN	HS	LENEN			ADDR[10:8]		
		23:16	LEN[7:0]							
		31:24								
0x28	DATA	7:0	DATA[7:0]							
		15:8								
0x2A ... 0x2F	Reserved									
0x30	DBGCTRL	7:0								DBGSTOP

28.10 Register Description - I2C Host

Registers can be 8, 16, or 32 bits wide. Atomic 8-, 16- and 32-bit accesses are supported. In addition, the 8-bit quarters and 16-bit halves of a 32-bit register, and the 8-bit halves of a 16-bit register can be accessed directly.

Some registers are optionally write-protected by the Peripheral Access Controller (PAC). Optional PAC write-protection is denoted by the "PAC Write-Protection" property in each individual register description. For details, refer to 28.5.8 Register Access Protection.

Some registers are synchronized when read and/or written. Synchronization is denoted by the "Write-Synchronized" or the "Read-Synchronized" property in each individual register description. For details, refer to 28.6.6 Synchronization.

Downloaded from Arrow.com.

Some registers are enable-protected, meaning they can only be written when the peripheral is disabled. Enable-protection is denoted by the "Enable-Protected" property in each individual register description.

Downloaded from Arrow.com.

28.10.1 Control A

Name: CTRLA
Offset: 0x00
Reset: 0x00000000
Property: PAC Write-Protection, Enable-Protected, Write-Synchronized

Bit	31	30	29	28	27	26	25	24
		LOWTOUTEN	INACTOUT[1:0]		SCLSM		SPEED[1:0]	
Access		R/W	R/W	R/W	R/W		R/W	R/W
Reset		0	0	0	0		0	0

Bit	23	22	21	20	19	18	17	16
	SEXTTOEN	MEXTTOEN	SDAHOLD[1:0]					PINOUT
Access	R/W	R/W	R/W	R/W				R/W
Reset	0	0	0	0				0

Bit	15	14	13	12	11	10	9	8
Access								
Reset								

Bit	7	6	5	4	3	2	1	0
	RUNSTDBY			MODE[2:0]			ENABLE	SWRST
Access	R/W			R/W	R/W	R/W	R/W	R/W
Reset	0			0	0	0	0	0

Bit 30 – LOWTOUTEN SCL Low Time-Out
This bit enables the SCL low time-out. If SCL is held low for 25ms-35ms, the host will release its clock hold, if enabled, and complete the current transaction. A stop condition will automatically be transmitted. INTFLAG.SB or INTFLAG.MB will be set as normal, but the clock hold will be released. The STATUS.LOWTOUT and STATUS.BUSERR status bits will be set.
This bit is not synchronized.

Value	Description
0	Time-out disabled.
1	Time-out enabled.

Bits 29:28 – INACTOUT[1:0] Inactive Time-Out
If the inactive bus time-out is enabled and the bus is inactive for longer than the time-out setting, the bus state logic will be set to idle. An inactive bus arise when either an I^2C host or client is holding the SCL low.
Enabling this option is necessary for SMBus compatibility, but can also be used in a non-SMBus set-up.
Calculated time-out periods are based on a 100kHz baud rate.
These bits are not synchronized.

Value	Name	Description
0x0	DIS	Disabled
0x1	55US	5-6 SCL cycle time-out (50-60µs)
0x2	105US	10-11 SCL cycle time-out (100-110µs)
0x3	205US	20-21 SCL cycle time-out (200-210µs)

Bit 27 – SCLSM SCL Clock Stretch Mode
This bit controls when SCL will be stretched for software interaction.
This bit is not synchronized.

Value	Description
0	SCL stretch according to Figure 28-5.
1	SCL stretch only after ACK bit, Figure 28-6.

Downloaded from Arrow.com.

Bits 25:24 – SPEED[1:0] Transfer Speed
These bits define bus speed.
These bits are not synchronized.

Value	Description
0x0	Standard-mode (Sm) up to 100 kHz and Fast-mode (Fm) up to 400 kHz
0x1	Fast-mode Plus (Fm+) up to 1 MHz
0x2	High-speed mode (Hs-mode) up to 3.4 MHz
0x3	Reserved

Bit 23 – SEXTTOEN Client SCL Low Extend Time-Out
This bit enables the client SCL low extend time-out. If SCL is cumulatively held low for greater than 25ms from the initial START to a STOP, the host will release its clock hold if enabled, and complete the current transaction. A STOP will automatically be transmitted.
SB or MB will be set as normal, but CLKHOLD will be release. The MEXTTOUT and BUSERR status bits will be set.
This bit is not synchronized.

Value	Description
0	Time-out disabled
1	Time-out enabled

Bit 22 – MEXTTOEN Host SCL Low Extend Time-Out
This bit enables the host SCL low extend time-out. If SCL is cumulatively held low for greater than 10ms from START-to-ACK, ACK-to-ACK, or ACK-to-STOP the host will release its clock hold if enabled, and complete the current transaction. A STOP will automatically be transmitted.
SB or MB will be set as normal, but CLKHOLD will be released. The MEXTTOUT and BUSERR status bits will be set.
This bit is not synchronized.

Value	Description
0	Time-out disabled
1	Time-out enabled

Bits 21:20 – SDAHOLD[1:0] SDA Hold Time
These bits define the SDA hold time with respect to the negative edge of SCL.
These bits are not synchronized.

Value	Name	Description
0x0	DIS	Disabled
0x1	75NS	50-100ns hold time
0x2	450NS	300-600ns hold time
0x3	600NS	400-800ns hold time

Bit 16 – PINOUT Pin Usage
This bit set the pin usage to either two- or four-wire operation:
This bit is not synchronized.

Value	Description
0	4-wire operation disabled.
1	4-wire operation enabled.

Bit 7 – RUNSTDBY Run in Standby
This bit defines the functionality in standby sleep mode.
This bit is not synchronized.

Value	Description
0	GCLK_SERCOMx_CORE is disabled and the I^2C host will not operate in standby sleep mode.
1	GCLK_SERCOMx_CORE is enabled in all sleep modes.

Bits 4:2 – MODE[2:0] Operating Mode
These bits must be written to 0x5 to select the I^2C host serial communication interface of the SERCOM.
These bits are not synchronized.

Downloaded from Arrow.com.

Bit 1 – ENABLE Enable
Due to synchronization, there is delay from writing CTRLA.ENABLE until the peripheral is enabled/disabled.
The value written to CTRL.ENABLE will read back immediately and the Synchronization Enable Busy bit in the Synchronization Busy register (SYNCBUSY.ENABLE) will be set. SYNCBUSY.ENABLE will be cleared when the operation is complete.
This bit is not enable-protected.

Value	Description
0	The peripheral is disabled or being disabled.
1	The peripheral is enabled.

Bit 0 – SWRST Software Reset
Writing '0' to this bit has no effect.
Writing '1' to this bit resets all registers in the SERCOM, except DBGCTRL, to their initial state, and the SERCOM will be disabled.
Writing '1' to CTRLA.SWRST will always take precedence, meaning that all other writes in the same write-operation will be discarded. Any register write access during the ongoing reset will result in an APB error. Reading any register will return the reset value of the register.
Due to synchronization there is a delay from writing CTRLA.SWRST until the reset is complete. CTRLA.SWRST and SYNCBUSY.SWRST will both be cleared when the reset is complete.
This bit is not enable-protected.

Value	Description
0	There is no reset operation ongoing.
1	The reset operation is ongoing.

Downloaded from Arrow.com.

28.10.2 Control B

Name: CTRLB
Offset: 0x04
Reset: 0x00000000
Property: PAC Write-Protection, Enable-Protected, Write-Synchronized

Bit	31	30	29	28	27	26	25	24
Access								
Reset								

Bit	23	22	21	20	19	18	17	16
						ACKACT	CMD[1:0]	
Access						R/W	W	W
Reset						0	0	0

Bit	15	14	13	12	11	10	9	8
							QCEN	SMEN
Access							R/W	R/W
Reset							0	0

Bit	7	6	5	4	3	2	1	0
Access								
Reset								

Bit 18 – ACKACT Acknowledge Action
This bit defines the I^2C host's acknowledge behavior after a data byte is received from the I^2C client. The acknowledge action is executed when a command is written to CTRLB.CMD, or if Smart mode is enabled (CTRLB.SMEN is written to one), when DATA.DATA is read.
This bit is not enable-protected.
This bit is not write-synchronized.

Value	Description
0	Send ACK.
1	Send NACK.

Bits 17:16 – CMD[1:0] Command
Writing these bits triggers a host operation as described below. The CMD bits are strobe bits, and always read as zero. The acknowledge action is only valid in Host Read mode. In Host Write mode, a command will only result in a repeated Start or Stop condition. The CTRLB.ACKACT bit and the CMD bits can be written at the same time, and then the acknowledge action will be updated before the command is triggered.
Commands can only be issued when either the Client on Bus Interrupt flag (INTFLAG.SB) or Host on Bus Interrupt flag (INTFLAG.MB) is '1'.
If CMD 0x1 is issued, a repeated start will be issued followed by the transmission of the current address in ADDR.ADDR. If another address is desired, ADDR.ADDR must be written instead of the CMD bits. This will trigger a repeated start followed by transmission of the new address.
Issuing a command will set the System Operation bit in the Synchronization Busy register (SYNCBUSY.SYSOP).

Table 28-4. Command Description

CMD[1:0]	Direction	Action
0x0	X	(No action)
0x1	X	Execute acknowledge action succeeded by repeated Start
0x2	0 (Write)	No operation
	1 (Read)	Execute acknowledge action succeeded by a byte read operation
0x3	X	Execute acknowledge action succeeded by issuing a Stop condition

Downloaded from Arrow.com.

These bits are not enable-protected.

Bit 9 – QCEN Quick Command Enable
This bit is not write-synchronized.

Value	Description
0	Quick Command is disabled.
1	Quick Command is enabled.

Bit 8 – SMEN Smart Mode Enable
When Smart mode is enabled, acknowledge action is sent when DATA.DATA is read.
This bit is not write-synchronized.

Value	Description
0	Smart mode is disabled.
1	Smart mode is enabled.

Downloaded from Arrow.com.

28.10.3 Baud Rate

Name: BAUD
Offset: 0x0C
Reset: 0x0000
Property: PAC Write-Protection, Enable-Protected

Bit	31	30	29	28	27	26	25	24
	HSBAUDLOW[7:0]							
Access	R/W	R/W	R/W	R/W	R/W	R/W	R/W	R/W
Reset	0	0	0	0	0	0	0	0

Bit	23	22	21	20	19	18	17	16
	HSBAUD[7:0]							
Access	R/W	R/W	R/W	R/W	R/W	R/W	R/W	R/W
Reset	0	0	0	0	0	0	0	0

Bit	15	14	13	12	11	10	9	8
	BAUDLOW[7:0]							
Access	R/W	R/W	R/W	R/W	R/W	R/W	R/W	R/W
Reset	0	0	0	0	0	0	0	0

Bit	7	6	5	4	3	2	1	0
	BAUD[7:0]							
Access	R/W	R/W	R/W	R/W	R/W	R/W	R/W	R/W
Reset	0	0	0	0	0	0	0	0

Bits 31:24 – HSBAUDLOW[7:0] High Speed Host Baud Rate Low
HSBAUDLOW non-zero: HSBAUDLOW indicates the SCL low time in High-speed mode according to
$\mathrm{HSBAUDLOW} = f_{\mathrm{GCLK}} \cdot T_{\mathrm{LOW}} - 1$
HSBAUDLOW equal to zero: The HSBAUD register is used to time T_{LOW}, T_{HIGH}, $T_{SU;STO}$, $T_{HD;STA}$ and $T_{SU;STA}$. T_{BUF} is timed by the BAUD register.

Bits 23:16 – HSBAUD[7:0] High Speed Host Baud Rate
This bit field indicates the SCL high time in High-speed mode according to the following formula. When HSBAUDLOW is zero, T_{LOW}, T_{HIGH}, $T_{SU;STO}$, $T_{HD;STA}$ and $T_{SU;STA}$ are derived using this formula. T_{BUF} is timed by the BAUD register.
$\mathrm{HSBAUD} = f_{\mathrm{GCLK}} \cdot T_{\mathrm{HIGH}} - 1$

Bits 15:8 – BAUDLOW[7:0] Host Baud Rate Low
If this bit field is non-zero, the SCL low time will be described by the value written.
For more information on how to calculate the frequency, see SERCOM 25.6.2.3 Clock Generation – Baud-Rate Generator.

Bits 7:0 – BAUD[7:0] Host Baud Rate
This bit field is used to derive the SCL high time if BAUD.BAUDLOW is non-zero. If BAUD.BAUDLOW is zero, BAUD will be used to generate both high and low periods of the SCL.
For more information on how to calculate the frequency, see SERCOM 25.6.2.3 Clock Generation – Baud-Rate Generator.

Downloaded from Arrow.com.

28.10.4 Interrupt Enable Clear

Name: INTENCLR
Offset: 0x14
Reset: 0x00
Property: PAC Write-Protection

This register allows the user to disable an interrupt without doing a read-modify-write operation. Changes in this register will also be reflected in the Interrupt Enable Set register (INTENSET).

Bit	7	6	5	4	3	2	1	0
	ERROR						SB	MB
Access	R/W						R/W	R/W
Reset	0						0	0

Bit 7 – ERROR Error Interrupt Enable
Writing '0' to this bit has no effect.
Writing '1' to this bit will clear the Error Interrupt Enable bit, which disables the Error interrupt.

Value	Description
0	Error interrupt is disabled.
1	Error interrupt is enabled.

Bit 1 – SB Client on Bus Interrupt Enable
Writing '0' to this bit has no effect.
Writing '1' to this bit will clear the Client on Bus Interrupt Enable bit, which disables the Client on Bus interrupt.

Value	Description
0	The Client on Bus interrupt is disabled.
1	The Client on Bus interrupt is enabled.

Bit 0 – MB Host on Bus Interrupt Enable
Writing '0' to this bit has no effect.
Writing '1' to this bit will clear the Host on Bus Interrupt Enable bit, which disables the Host on Bus interrupt.

Value	Description
0	The Host on Bus interrupt is disabled.
1	The Host on Bus interrupt is enabled.

Downloaded from Arrow.com.

28.10.5 Interrupt Enable Set

Name: INTENSET
Offset: 0x16
Reset: 0x00
Property: PAC Write-Protection

This register allows the user to enable an interrupt without doing a read-modify-write operation. Changes in this register will also be reflected in the Interrupt Enable Clear register (INTENCLR).

Bit	7	6	5	4	3	2	1	0
	ERROR						SB	MB
Access	R/W						R/W	R/W
Reset	0						0	0

Bit 7 – ERROR Error Interrupt Enable
Writing '0' to this bit has no effect.
Writing '1' to this bit will set the Error Interrupt Enable bit, which enables the Error interrupt.

Value	Description
0	Error interrupt is disabled.
1	Error interrupt is enabled.

Bit 1 – SB Client on Bus Interrupt Enable
Writing '0' to this bit has no effect.
Writing '1' to this bit will set the Client on Bus Interrupt Enable bit, which enables the Client on Bus interrupt.

Value	Description
0	The Client on Bus interrupt is disabled.
1	The Client on Bus interrupt is enabled.

Bit 0 – MB Host on Bus Interrupt Enable
Writing '0' to this bit has no effect.
Writing '1' to this bit will set the Host on Bus Interrupt Enable bit, which enables the Host on Bus interrupt.

Value	Description
0	The Host on Bus interrupt is disabled.
1	The Host on Bus interrupt is enabled.

Downloaded from Arrow.com.

28.10.6 Interrupt Flag Status and Clear

Name: INTFLAG
Offset: 0x18
Reset: 0x00
Property: -

Bit	7	6	5	4	3	2	1	0
	ERROR						SB	MB
Access	R/W						R/W	R/W
Reset	0						0	0

Bit 7 – ERROR Error
This flag is cleared by writing '1' to it.
This bit is set when any error is detected. Errors that will set this flag have corresponding status bits in the STATUS register. These status bits are LENERR, SEXTTOUT, MEXTTOUT, LOWTOUT, ARBLOST, and BUSERR.
Writing '0' to this bit has no effect.
Writing '1' to this bit will clear the flag.

Bit 1 – SB Client on Bus
The Client on Bus flag (SB) is set when a byte is successfully received in Host Read mode, for example, no arbitration lost or bus error occurred during the operation. When this flag is set, the host forces the SCL line low, stretching the I^2C clock period. The SCL line will be released and SB will be cleared on one of the following actions:

- Writing to ADDR.ADDR
- Writing to DATA.DATA
- Reading DATA.DATA when Smart mode is enabled (CTRLB.SMEN)
- Writing a valid command to CTRLB.CMD

Writing '1' to this bit location will clear the SB flag. The transaction will not continue or be terminated until one of the above actions is performed.
Writing '0' to this bit has no effect.

Bit 0 – MB Host on Bus
This flag is set when a byte is transmitted in Host Write mode. The flag is set regardless of the occurrence of a bus error or an Arbitration Lost condition. MB is also set when arbitration is lost during sending of NACK in Host Read mode, or when issuing a Start condition if the bus state is unknown. When this flag is set and arbitration is not lost, the host forces the SCL line low, stretching the I^2C clock period. The SCL line will be released and MB will be cleared on one of the following actions:

- Writing to ADDR.ADDR
- Writing to DATA.DATA
- Reading DATA.DATA when Smart mode is enabled (CTRLB.SMEN)
- Writing a valid command to CTRLB.CMD

Writing '1' to this bit location will clear the MB flag. The transaction will not continue or be terminated until one of the above actions is performed.
Writing '0' to this bit has no effect.

Downloaded from Arrow.com.

28.10.7 Status

Name: STATUS
Offset: 0x1A
Reset: 0x0000
Property: Write-Synchronized

Bit	15	14	13	12	11	10	9	8
						LENERR	SEXTTOUT	MEXTTOUT
Access						R/W	R/W	R/W
Reset						0	0	0

Bit	7	6	5	4	3	2	1	0
	CLKHOLD	LOWTOUT	BUSSTATE[1:0]			RXNACK	ARBLOST	BUSERR
Access	R	R/W	R/W	R/W		R	R/W	R/W
Reset	0	0	0	0		0	0	0

Bit 10 – LENERR Transaction Length Error
This bit is set when automatic length is used for a DMA transaction and the client sends a NACK before ADDR.LEN bytes have been written by the host.
Writing '1' to this bit location will clear STATUS.LENERR. This flag is automatically cleared when writing to the ADDR register.
Writing '0' to this bit has no effect.
This bit is not write-synchronized.

Bit 9 – SEXTTOUT Client SCL Low Extend Time-Out
This bit is set if a client SCL low extend time-out occurs.
This bit is automatically cleared when writing to the ADDR register.
Writing '1' to this bit location will clear SEXTTOUT. Normal use of the I^2C interface does not require the SEXTTOUT flag to be cleared by this method.
Writing '0' to this bit has no effect.
This bit is not write-synchronized.

Bit 8 – MEXTTOUT Host SCL Low Extend Time-Out
This bit is set if a Host SCL low time-out occurs.
Writing '1' to this bit location will clear STATUS.MEXTTOUT. This flag is automatically cleared when writing to the ADDR register.
Writing '0' to this bit has no effect.
This bit is not write-synchronized.

Bit 7 – CLKHOLD Clock Hold
This bit is set when the host is holding the SCL line low, stretching the I^2C clock. Software should consider this bit when INTFLAG.SB or INTFLAG.MB is set.
This bit is cleared when the corresponding Interrupt flag is cleared and the next operation is given.
Writing '0' to this bit has no effect.
Writing '1' to this bit has no effect.
This bit is not write-synchronized.

Bit 6 – LOWTOUT SCL Low Time-Out
This bit is set if an SCL low time-out occurs.
Writing '1' to this bit location will clear this bit. This flag is automatically cleared when writing to the ADDR register.
Writing '0' to this bit has no effect.
This bit is not write-synchronized.

Bits 5:4 – BUSSTATE[1:0] Bus State
These bits indicate the current I^2C Bus state.

Downloaded from Arrow.com.

When in UNKNOWN state, writing 0x1 to BUSSTATE forces the bus state into the IDLE state. The bus state cannot be forced into any other state.
Writing BUSSTATE to idle will set SYNCBUSY.SYSOP.

Value	Name	Description
0x0	UNKNOWN	The Bus state is unknown to the I²C host and will wait for a Stop condition to be detected or wait to be forced into an Idle state by software
0x1	IDLE	The Bus state is waiting for a transaction to be initialized
0x2	OWNER	The I²C host is the current owner of the bus
0x3	BUSY	Some other I²C host owns the bus

Bit 2 – RXNACK Received Not Acknowledge
This bit indicates whether the last address or data packet sent was acknowledged or not.
Writing '0' to this bit has no effect.
Writing '1' to this bit has no effect.
This bit is not write-synchronized.

Value	Description
0	Client responded with ACK.
1	Client responded with NACK.

Bit 1 – ARBLOST Arbitration Lost
This bit is set if arbitration is lost while transmitting a high data bit or a NACK bit, or while issuing a Start or Repeated Start condition on the bus. The Host on Bus Interrupt flag (INTFLAG.MB) will be set when STATUS.ARBLOST is set.
Writing the ADDR.ADDR register will automatically clear STATUS.ARBLOST.
Writing '0' to this bit has no effect.
Writing '1' to this bit will clear it.
This bit is not write-synchronized.

Bit 0 – BUSERR Bus Error
This bit indicates that an illegal Bus condition has occurred on the bus, regardless of bus ownership. An illegal Bus condition is detected if a protocol violating start, repeated start or stop is detected on the I²C bus lines. A Start condition directly followed by a Stop condition is one example of a protocol violation. If a time-out occurs during a frame, this is also considered a protocol violation, and will set BUSERR.
If the I²C host is the bus owner at the time a bus error occurs, STATUS.ARBLOST and INTFLAG.MB will be set in addition to BUSERR.
Writing the ADDR.ADDR register will automatically clear the BUSERR flag.
Writing '0' to this bit has no effect.
Writing '1' to this bit will clear it.
This bit is not write-synchronized.

Downloaded from Arrow.com.

28.10.8 Synchronization Busy

Name: SYNCBUSY
Offset: 0x1C
Reset: 0x00000000

Bit	31	30	29	28	27	26	25	24
Access								
Reset								

Bit	23	22	21	20	19	18	17	16
Access								
Reset								

Bit	15	14	13	12	11	10	9	8
Access								
Reset								

Bit	7	6	5	4	3	2	1	0
						SYSOP	ENABLE	SWRST
Access						R	R	R
Reset						0	0	0

Bit 2 – SYSOP System Operation Synchronization Busy
Writing CTRLB.CMD, STATUS.BUSSTATE, ADDR, or DATA when the SERCOM is enabled requires synchronization. When written, the SYNCBUSY.SYSOP bit will be set until synchronization is complete.

Value	Description
0	System operation synchronization is not busy.
1	System operation synchronization is busy.

Bit 1 – ENABLE SERCOM Enable Synchronization Busy
Enabling and disabling the SERCOM (CTRLA.ENABLE) requires synchronization. When written, the SYNCBUSY.ENABLE bit will be set until synchronization is complete.

Value	Description
0	Enable synchronization is not busy.
1	Enable synchronization is busy.

Bit 0 – SWRST Software Reset Synchronization Busy
Resetting the SERCOM (CTRLA.SWRST) requires synchronization. When written, the SYNCBUSY.SWRST bit will be set until synchronization is complete.

Value	Description
0	SWRST synchronization is not busy.
1	SWRST synchronization is busy.

Downloaded from Arrow.com.

28.10.9 Address

Name: ADDR
Offset: 0x24
Reset: 0x0000
Property: Write-Synchronized

Bit	31	30	29	28	27	26	25	24
Access								
Reset								

Bit	23	22	21	20	19	18	17	16
	LEN[7:0]							
Access	R/W	R/W	R/W	R/W	R/W	R/W	R/W	R/W
Reset	0	0	0	0	0	0	0	0

Bit	15	14	13	12	11	10	9	8
	TENBITEN	HS	LENEN			ADDR[10:8]		
Access	R/W	R/W	R/W			R/W	R/W	R/W
Reset	0	0	0			0	0	0

Bit	7	6	5	4	3	2	1	0
	ADDR[7:0]							
Access	R/W	R/W	R/W	R/W	R/W	R/W	R/W	R/W
Reset	0	0	0	0	0	0	0	0

Bits 23:16 – LEN[7:0] Transaction Length
These bits define the transaction length of a DMA transaction from 0 to 255 bytes. The Transfer Length Enable (LENEN) bit must be written to '1' in order to use DMA.

Bit 15 – TENBITEN Ten Bit Addressing Enable
This bit enables 10-bit addressing. This bit can be written simultaneously with ADDR to indicate a 10-bit or 7-bit address transmission.

Value	Description
0	10-bit addressing disabled.
1	10-bit addressing enabled.

Bit 14 – HS High Speed
This bit enables High-speed mode for the current transfer from repeated START to STOP. This bit can be written simultaneously with ADDR for a high speed transfer.

Value	Description
0	High-speed transfer disabled.
1	High-speed transfer enabled.

Bit 13 – LENEN Transfer Length Enable

Value	Description
0	Automatic transfer length disabled.
1	Automatic transfer length enabled.

Bits 10:0 – ADDR[10:0] Address
When ADDR is written, the consecutive operation will depend on the bus state:
UNKNOWN: INTFLAG.MB and STATUS.BUSERR are set, and the operation is terminated.
BUSY: The I^2C host will await further operation until the bus becomes IDLE.
IDLE: The I^2C host will issue a start condition followed by the address written in ADDR. If the address is acknowledged, SCL is forced and held low, and STATUS.CLKHOLD and INTFLAG.MB are set.

Downloaded from Arrow.com.

OWNER: A repeated start sequence will be performed. If the previous transaction was a read, the acknowledge action is sent before the repeated start bus condition is issued on the bus. Writing ADDR to issue a repeated start is performed while INTFLAG.MB or INTFLAG.SB is set.
STATUS.BUSERR, STATUS.ARBLOST, INTFLAG.MB and INTFLAG.SB will be cleared when ADDR is written.
The ADDR register can be read at any time without interfering with ongoing bus activity, as a read access does not trigger the host logic to perform any bus protocol related operations.
The I^2C host control logic uses bit 0 of ADDR as the bus protocol's read/write flag (R/W); 0 for write and 1 for read.

Downloaded from Arrow.com.

28.10.10 Data

Name: DATA
Offset: 0x28
Reset: 0x0000
Property: Write-Synchronized, Read-Synchronized (1)

Bit	15	14	13	12	11	10	9	8
Access								
Reset								

Bit	7	6	5	4	3	2	1	0
	DATA[7:0]							
Access	R/W	R/W	R/W	R/W	R/W	R/W	R/W	R/W
Reset	0	0	0	0	0	0	0	0

Bits 7:0 – DATA[7:0] Data
The host data register I/O location (DATA) provides access to the host transmit and receive data buffers. Reading valid data or writing data to be transmitted can be successfully done only when SCL is held low by the host (STATUS.CLKHOLD is set). An exception is reading the last data byte after the stop condition has been sent. Accessing DATA.DATA auto-triggers I^2C bus operations. The operation performed depends on the state of CTRLB.ACKACT, CTRLB.SMEN and the type of access (read/write).
Note:

1. Writing DATA.DATA always requires synchronization.
   Reading DATA.DATA only requires synchronization when Smart mode is enabled.

Downloaded from Arrow.com.

28.10.11 Debug Control

Name: DBGCTRL
Offset: 0x30
Reset: 0x00
Property: PAC Write-Protection

Bit	7	6	5	4	3	2	1	0
								DBGSTOP
Access								R/W
Reset								0

Bit 0 – DBGSTOP Debug Stop Mode
This bit controls functionality when the CPU is halted by an external debugger.

Value	Description
0	The baud-rate generator continues normal operation when the CPU is halted by an external debugger.
1	The baud-rate generator is halted when the CPU is halted by an external debugger.

Downloaded from Arrow.com.

29. I2S - Inter-IC Sound Controller

29.1 Overview

The Inter-IC Sound Controller (I^2S) provides bidirectional, synchronous and digital audio link with external audio devices.

This controller is compliant with the Inter-IC Sound (I^2S) bus specification. It supports TDM interface with external multi-slot audio codecs. It also supports Pulse Density Modulation (PDM) interface with external MEMS microphones.

The I^2S consists of two Clock Units and two Serializers, that can be enabled separately, to provide Host, Client, or controller modes, and operate as Receiver or Transmitter.

The pins associated with I^2S peripheral are SDm, FSn, SCKn, and MCKn pins, where n=[0,1] denotes the Clock Unit and m=[0,1] is the Serializers instance.

FSn is referred to as Word Select in standard I^2S mode operation and as Frame Sync in TDM mode. Peripheral DMAC channels, separate for each Serializer, allow a continuous high bitrate data transfer without processor intervention to the following:

- Audio codecs in Host, Client, or Controller mode
- Stereo DAC or ADC through dedicated I^2S serial interface
- Multi-slot or multiple stereo DACs or ADCs, using the TDM format
- Mono or stereo MEMS microphones, using the PDM interface
- 1-channel burst transfer with non-periodic Frame Sync

Each Serializer supports using either a single DMAC channel for all data channels, or two separate DMAC channels for different data channels.

The I^2S supports 8-bit and 16-bit compact stereo format. This helps in reducing the required DMA bandwidth by transferring the left and right samples within the same data word.

Usually, an external audio codec or digital signal processor (DSP) requires a clock which is a multiple of the sampling frequency *fs* (for example, 384×*fs*). The I^2S peripheral in Host Mode and Controller mode is capable of outputting an output clock ranging from 16×*fs* to 1024×*fs* on the Host Clock pin (MCKn).

29.2 Features

- Compliant with Inter-IC Sound (I^2S) bus specification
- 2 independent Serializers configurable as receiver or as transmitter
- Supported data formats:
  - 32-, 24-, 20-, 18-, 16-, and 8-bit mono or stereo format
  - 16- and 8-bit compact stereo format, with left and right samples packed in the same word to reduce data transfers
- Supported data frame formats:
  - 2-channel I^2S with Word Select
  - 1- to 8-slot Time Division Multiplexed (TDM) with Frame Sync and individually enabled slots
  - 1- or 2-channel Pulse Density Modulation (PDM) reception for MEMS microphones
  - 1-channel burst transfer with non-periodic Frame Sync
- 2 independent Clock Units handling either the same clock or separate clocks for the Serializers:
  - Suitable for a wide range of sample frequencies *fs*, including 32kHz, 44.1kHz, 48kHz, 88.2kHz, 96kHz, and 192kHz
  - 16×*fs* to 1024×*fs* Host Clock generated for external audio CODECs
- Host, client, and controller modes:
  - Host: Data received/transmitted based on internally-generated clocks. Output Serial Clock on SCKn pin, Host Clock on MCKn pin, and Frame Sync Clock on FSn pin

Downloaded from Arrow.com.

  - Client: Data received/transmitted based on external clocks on Serial Clock pin (SCKn) or Host Clock pin (MCKn)
  - Controller: Only output internally generated Host clock (MCKn), Serial Clock (SCKn), and Frame Sync Clock (FSn)
- Individual enabling and disabling of Clock Units and Serializers
- DMA interfaces for each Serializer receiver or transmitter to reduce processor overhead:
  - Either one DMA channel for all data slots or
  - One DMA channel per data channel in stereo
- Smart Data Holding register management to avoid data slots mix after overrun or underrun

29.3 Block Diagram

Figure 29-1. I²S Block Diagram

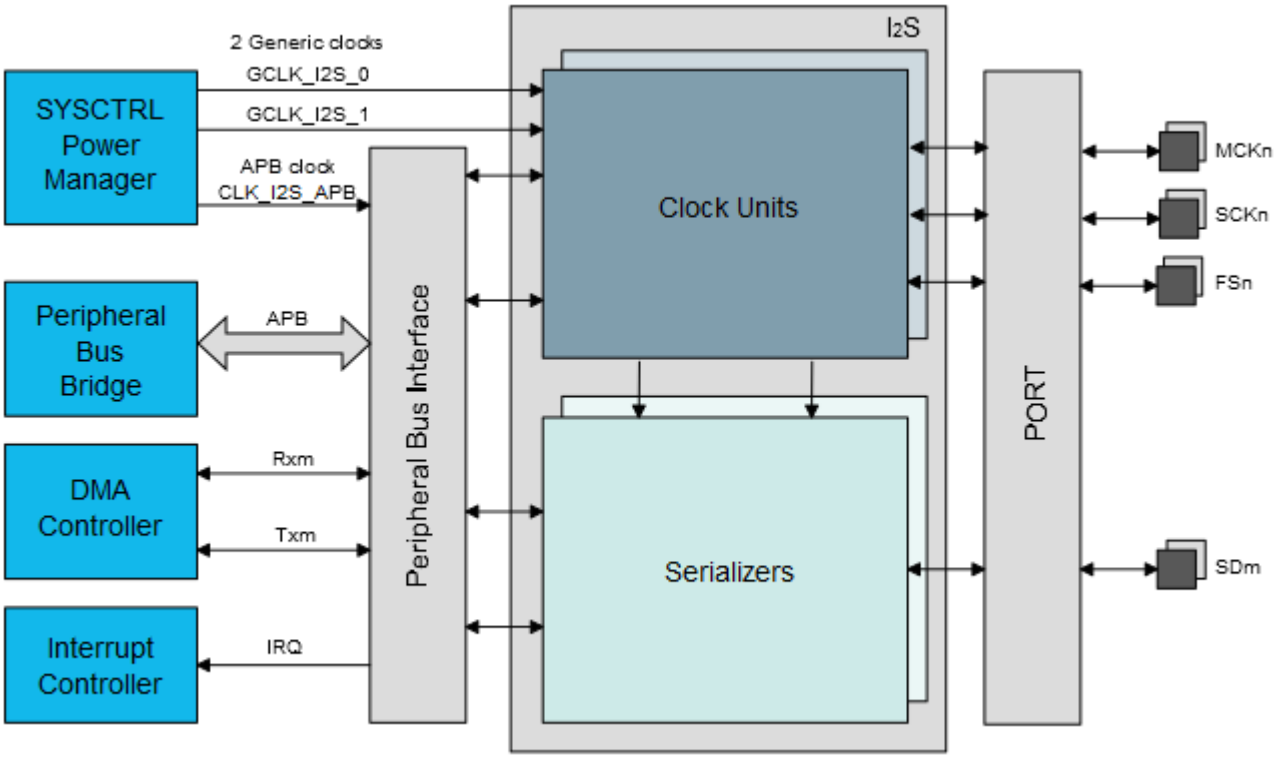

29.4 Signal Description

Table 29-1. Host Mode

Pin Name	Pin Description	Type
MCKn	Host Clock for Clock Unit n	Input/Output
SCKn	Serial Clock for Clock Unit n	Input/Output
FSn	I²S Word Select or TDM Frame Sync for Clock Unit n	Input/Output
SDm	Serial Data Input or Output for Serializer m	Input/Output

Downloaded from Arrow.com.

Table 29-2. Client Mode

Pin Name	Pin Description	Type
MCKn	Host Clock	Input
SCKn	Serial Clock for Clock Unit n	Input
FSn	I^2S Word Select or TDM Frame Sync	Input
SDm	Serial Data Input or Output for Serializer m	Input/Output

Table 29-3. Controller Mode

Pin Name	Pin Description	Type
MCKn	Host Clock for Clock Unit n	Output
SCKn	Serial Clock for Clock Unit n	Output
FSn	I^2S Word Select or TDM Frame Sync	Output
SDm	Not Applicable	Not Applicable

Note: One signal can be mapped on several pins.

Related Links

7. I/O Multiplexing and Considerations

29.5 Product Dependencies

In order to use this module, other parts of the system must be configured correctly, as described below.

29.5.1 I/O Lines

Using the I^2S I/O lines requires the I/O pins to be configured.

The I^2S pins may be multiplexed with I/O Controller lines. The user must first program the I/O Controller to assign the desired I^2S pins to their peripheral function. If the I^2S I/O lines are not used by the application, they can be used for other purposes by the I/O Controller. It is required to enable only the I^2S inputs and outputs actually in use.

Related Links

23. PORT - I/O Pin Controller

29.5.2 Power Management

The I^2S will continue to operate in any sleep mode where the selected source clocks are running.

29.5.3 Clocks

The clock for the I^2S bus interface (CLK_I2S_APB) is generated by the Power Manager. This clock is disabled at reset, and can be enabled in the Power Manager. It is recommended to disable the I^2S before disabling the clock, to avoid freezing the I^2S in an undefined state.

There are two generic clocks, GCLK_I2S_0 and GCLK_I2S_1, connected to the I^2S peripheral, one for each I^2S clock unit. The generic clocks (GCLK_I2S_n, n=0..1) can be set to a wide range of frequencies and clock sources. The GCLK_I2S_n must be enabled and configured before use.

The GCLK_I2S_n clocks must be enabled and configured before triggering Software Reset, so that the logic in all clock domains can be reset.

The generic clocks are only used in Host mode and Controller mode. In Host mode, the clock from a single clock unit can be used for both Serializers to handle synchronous transfers, or a separate clock from different clock units can be used for each Serializer to handle transfers on non-related clocks.

Related Links

15. GCLK - Generic Clock Controller

Downloaded from Arrow.com.

29.5.4 DMA

The DMA request lines are connected to the DMA Controller (DMAC). Using the I^2S DMA requests requires the DMA Controller to be configured first.

Related Links

20. DMAC – Direct Memory Access Controller

29.5.5 Interrupts

The interrupt request line is connected to the interrupt controller. Using I^2S interrupts requires the interrupt controller to be configured first.

Related Links

11.2 Nested Vector Interrupt Controller

29.5.6 Events

Not applicable.

29.5.7 Debug Operation

When the CPU is halted in Debug mode, this peripheral will continue normal operation. If the peripheral is configured to require periodical service by the CPU through interrupts or similar, improper operation or data loss may result during debugging. This peripheral can be forced to halt operation during debugging.

29.5.8 Register Access Protection

Registers with write-access can be optionally write-protected by the Peripheral Access Controller (PAC), except for the following:

- DATAm
- INTFLAG
- SYNCBUSY

Note: Optional write-protection is indicated by the "PAC Write-Protection" property in the register description.

Write-protection does not apply for accesses through an external debugger.

29.5.9 Analog Connections

Not applicable.

29.6 Functional Description

29.6.1 Principle of Operation

The I^2S uses three or four communication lines for synchronous data transfer:

- SDm for receiving or transmitting in Serializer m (m=0..1)
- SCKn for the serial clock in Clock Unit n (n=0..1)
- FSn for the frame synchronization or I^2S word select, identifying the beginning of each frame
- Optionally, MCKn to output an oversampling clock to an external codec

I^2S data transfer is frame based, where a serial frame:

- Starts with the frame synchronization active edge, and
- Consists of 1 to 8 data slots, that are 8-, 16-, 24-, or 32-bit wide.

Each data slot is used to transfer one data sample of 8, 16, 18, 20, 24 or 32 bits.

Frame based data transfer is described in the following figure:

Downloaded from Arrow.com.

Figure 29-2. Data Format: Frames, Slot, Bits and Clocks

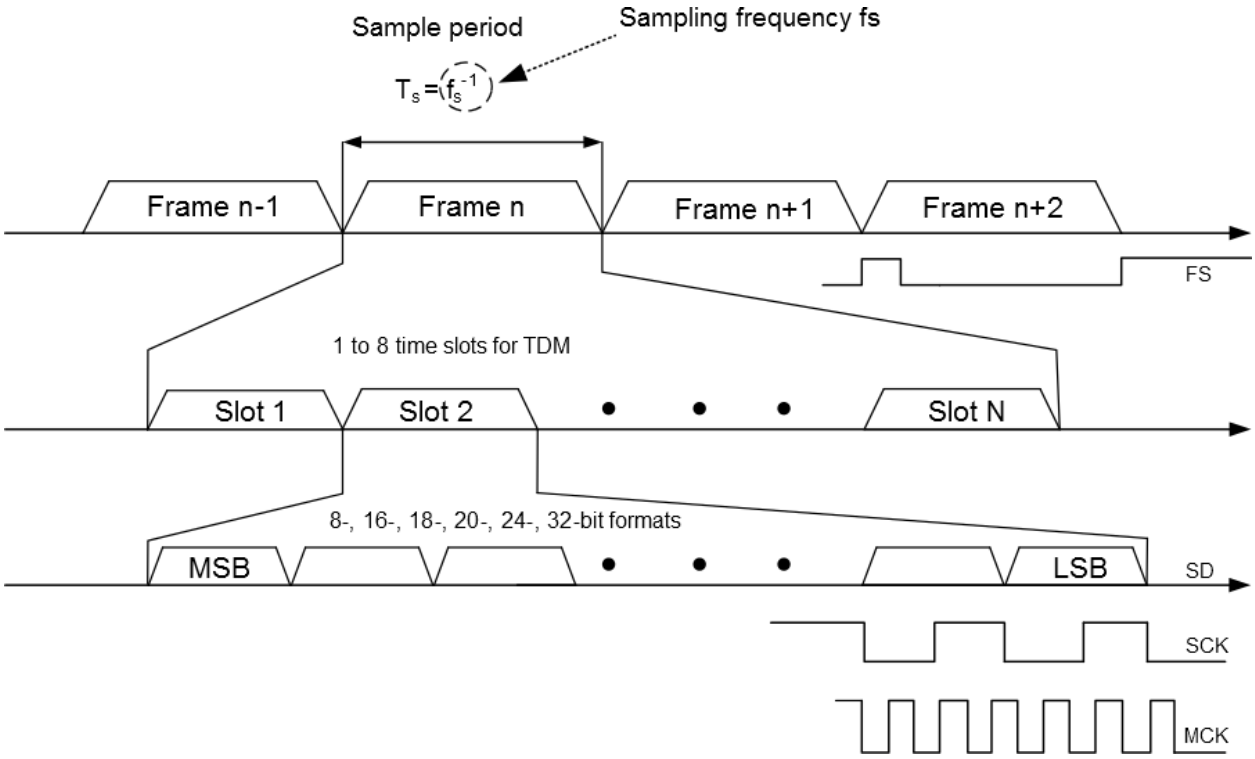

I²S supports multiple data formats such as:

- 32-, 24-, 20-, 18-, 16-, and 8-bit mono or stereo format
- 16- and 8-bit compact stereo format, with left and right samples packed in the same word to reduce data transfers

In mono format, Transmit mode, data written to the left channel is duplicated to the right output channel. In mono format, Receiver mode, data received from the right channel is ignored and data received from the left channel is duplicated in to the right channel.

In mono format, TDM Transmit mode with more than two slots, data written to the even-numbered slots is duplicated in to the following odd-numbered slot.

In mono format, TDM Receiver mode with more than two slots, data received from the even-numbered slots is duplicated in to the following odd-numbered slot.

Mono format can be enabled by writing a '1' to the MONO bit in the Serializer m Control register (SERCTRLm.MONO).

I²S support different data frame formats:

- 2-channel I²S with Word Select
- 1- to 8-slot Time Division Multiplexed (TDM) with Frame Sync and individually enabled slots
- 1- or 2-channel Pulse Density Modulation (PDM) reception for MEMS microphones
- 1-channel burst transfer with non-periodic Frame Sync

In 2 channel I²S mode, number of slots configured is one or two and successive data words corresponds to left and right channel. Left and right channel are identified by polarity of Word Select signal (FSn signal). Each frame consists of one or two data word(s). In the case of compact stereo format, the number of slots can be one. When 32-bit slot size is used, the number of slots can be two.

In TDM format, number slots can be configured up to 8 slots. If 4 slots are configured, each frame consists of 4 data words.

In PDM format, continuous 1-bit data samples are available on the SDI line for each SCKn rising and SCKn falling edge as in case of a MEMS microphone with PDM interface.

Downloaded from Arrow.com.

1-channel burst transfer with non-periodic Frame Sync mode is useful typically for passing control non-auto data as in case of DSP. In Burst mode, a single Data transfer starts at each Frame Sync pulse, and these pulses are 1-bit wide and occur only when a Data transfer is requested.

Sections 29.6.4 I2S Format - Reception and Transmission Sequence with Word Select, 29.6.5 TDM Format - Reception and Transmission Sequence and 29.7 I2S Application Examples describe more about frame/data formats and register settings required for different I²S applications.

Figure 29-3. I²S Functional Block Diagram

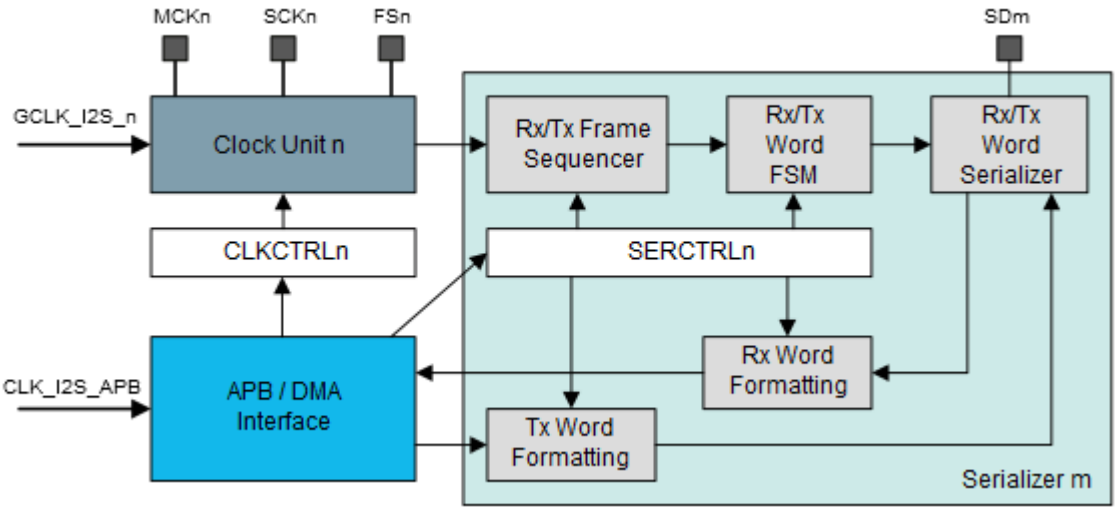

29.6.1.1 Initialization

The I²S features two Clock Units, and two Serializers configurable as Receiver or Transmitter. The two Serializers can either share the same Clock Unit or use separate Clock Units.

Before enabling the I²S, the following registers must be configured:

- Clock Control registers (CLKCTRLn)
- Serializer Control registers (SERCTRLm)

In Host mode, one of the generic clocks for the I²S must also be configured to operate at the required frequency, as described in 29.6.1 Principle of Operation.

- *fs* is the sampling frequency that defines the frame period
- CLKCTRLn.NBSLOTS defines the number of slots in each frame
- CLKCTRLn.SLOTSIZE defines the number of bits in each slot
- SCKn frequency must be f_{SCKn} = *fs* × number_of_slots × number_of_bits_per_slot)

Once the configuration has been written, the I²S Clock Units and Serializers can be enabled by writing a '1' to the CKENn and SERENm bits and to the ENABLE bit in the Control register (CTRLA). The Clock Unit n can be enabled alone, in Controller Mode, to output clocks to the MCKn, SCKn, and FSn pins. The Clock Units must be enabled if Serializers are enabled.

The Clock Units and the Serializers can be disabled independently by writing a '0' to CTRLA.CKENn or CTRLA.SERENm, respectively. Once requested to stop, they will only stop when the pending transmit frames will be completed, if any. When requested to stop, the ongoing reception of the current slot will be completed and then the Serializer will be stopped.

Example 29-1. *Example Requirements: fs*=48kHz, MCKn=384×*fs*

If a 384×*fs* MCKn Host Clock is required (i.e. 18.432 MHz), the I²S generic clock could run at 18.432 MHz with a Host Clock Output Division Factor of 1 (selected by writing CLKCTRLn.MCKOUTDIV=0x0) in order to obtain the desired MCKn frequency.

Downloaded from Arrow.com.

When using 6 slots per frame (CLKCTRLn.NBSLOTS=0x5) and 32-bit slots (CLKCTRLn.SLOTSIZE=0x3), the desired SCKn frequency is

f_{SCKn} = 48 kHz × 6 × 32 = 9.216 MHz

This frequency can be achieved by dividing the I²S generic clock output of 18.432 MHz by factor 2: Writing CLKCTRLn.MCKDIV=0x1 will select the correct division factor and output the desired SCKn frequency of 9.216 MHz to the SCKn pin.

If MCKn is not required, the generic clock could be set to 9.216 MHz and CLKCTRLn.MCKDIV=0x0.

29.6.2 Basic Operation

The Receiver can be operated by reading the Data Holding register (DATAm), whenever the Receive Ready m bit in the Interrupt Flag Status and Clear register (INTFLAG.RXRDYm) is set. Successive values read from DATAm register will correspond to the samples from the left and right audio channels. In TDM mode, the successive values read from DATAm register correspond to the first slot to the last slot. For instance, if I²S is configured in TDM mode with 4 slots in a frame, then successive values written to DATAm register correspond to first, second, third, and fourth slot. The number of slots in TDM is configured in CLKCTRLn.NBSLOTS.

The Transmitter can be operated by writing to the Data Holding register (DATAm), whenever the Transmit Ready m bit in the Interrupt Flag Status and Clear register (INTFLAG.TXRDYm) is set. Successive values written to DATAm register should correspond to the samples from the left and right audio channels. In TDM mode, the successive values written to DATAm register correspond to the first, second, third, slot to the last slot. The number of slots in TDM is configured in CLKCTRLn.NBSLOTS.

The Receive Ready and Transmit Ready bits can be polled by reading the INTFLAG register.

The processor load can be reduced by enabling interrupt-driven operation. The RXRDYm and/or TXRDYm interrupt requests can be enabled by writing a '1' to the corresponding bit in the Interrupt Enable register (INTENSET). The interrupt service routine associated to the I²S interrupt request will then be executed whenever Receive Ready or Transmit Ready status bits are set.

The processor load can be reduced further by enabling DMA-driven operation. Then, the DMA channels support up to four trigger sources from the I²S peripheral. These four trigger sources in DMAC channel are

- I2S RX 0,
- I2S RX 1,
- I2S TX 0, and
- I2S TX 1.

For further reference, these are called I2S_DMAC_ID_RX_m and I2S_DMAC_ID_TX_m triggers (m=0..1). By using these trigger sources, one DMA data transfer will be executed whenever the Receive Ready or Transmit Ready status bits are set.

29.6.2.1 Host Clock, Serial Clock, and Frame Sync Generation

The generation of clocks in the I²S is described in the next figure.

Downloaded from Arrow.com.

Figure 29-4. I²S Clocks

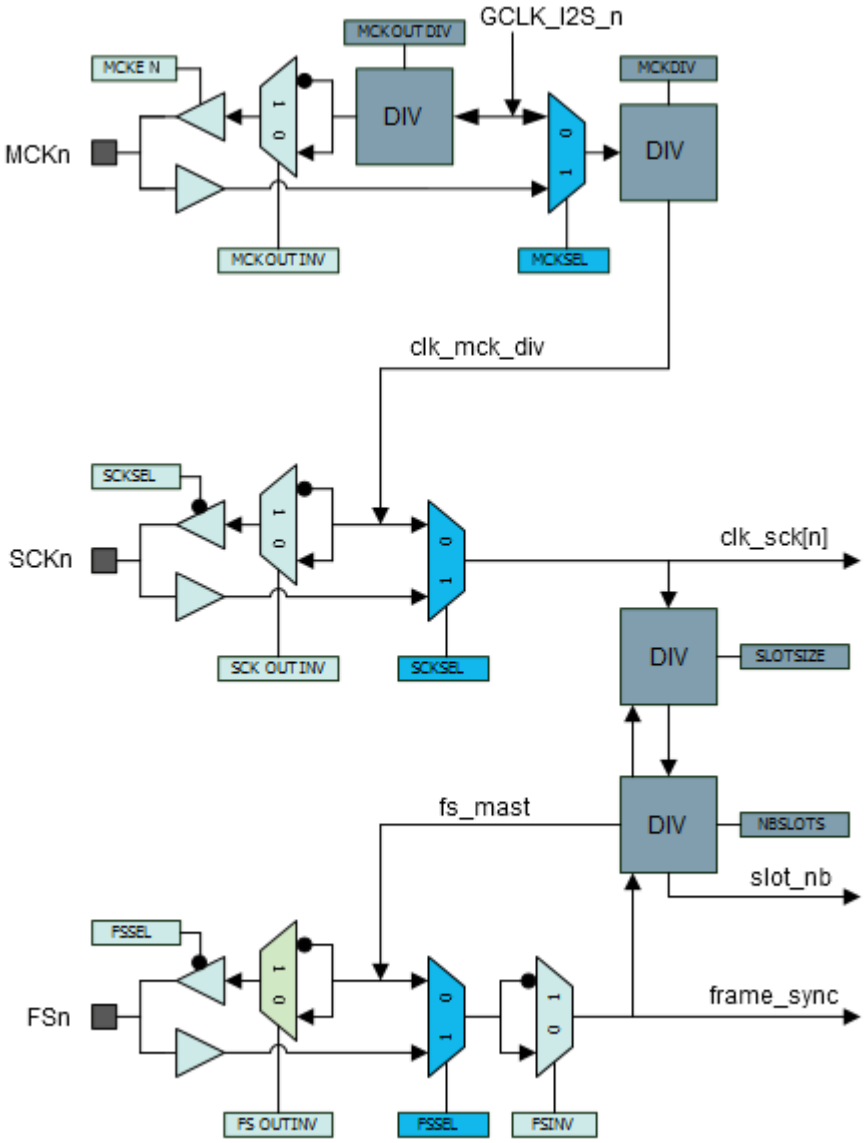

Generation

29.6.2.1.1 Client Mode

In Client mode, the Serial Clock and Frame Sync (Word Select in I²S mode and Frame Sync in TDM mode) are driven by an external host. SCKn and FSn pins are inputs and no generic clock is required by the I²S.

29.6.2.1.2 Host Mode and Controller Mode

In Host Mode, the Host Clock (MCKn), the Serial Clock (SCKn), and the Frame Sync Clock (FSn) are generated by the I²S controller. The user can configure the Host Clock, Serial Clock, and Word Select Frame Sync signal (Word Select in I²S mode and Frame Sync in TDM mode) using the Clock Unit n Control register (CLKCTRLn). MCKn, SCKn, and FSn pins are outputs and a generic clock is used to derive the I²S clocks.

In some applications, audio CODECs connected to the I²S pins may require a Host Clock signal with a frequency multiple of the audio sample frequency *fs*, such as 256×*fs*.

In Controller mode, only the Clock generation unit needs to be configured by writing to the CTRLA and CLKCTRLn registers, where parameters such as clock division factors, Number of slots, Slot size, Frame Sync signal, clock enable are selected.

Downloaded from Arrow.com.

29.6.2.1.3 MCKn Clock Frequency

When the I²S is in Host mode, writing a '1' to CLKCTRLn.MCKEN will output GCLK_I2S_n as Host Clock to the MCKn pin. The Host Clock to MCKn pin can be divided by writing to CLKCTRLn.MCKSEL and CLKCTRLn.MCKOUTDIV. The Host Clock (MCKn) frequency is GCLK_I2S_n frequency divided by (MCLKOUTDIV+1).

$$f(\mathrm{MCKn}) = \frac{f(\mathrm{GCLK_I2S_}n)}{(\mathrm{MCKOUTDIV}+1)}$$

29.6.2.1.4 SCKn Clock Frequency

When the Serial Clock (SCKn) is generated from GCLK_I2S_n and both CLKCTRLn.MCKSEL and CLKCTRLn.SCKSEL are zero, the Serial Clock (SCKn) frequency is GCLK_I2S_n frequency divided by (MCKDIV+1).

i.e.

$$f(\mathrm{SCKn}) = \frac{f(\mathrm{GCLK_I2S_}n)}{(\mathrm{MCKDIV}+1)}$$

29.6.2.1.5 Relation Between MCKn, SCKn, and Sampling Frequency *fs*

Based on sampling frequency *fs*, the SCKn frequency requirement can be calculated:

- SCKn frequency: $f_{\mathrm{SCKn}} = fs \times \mathrm{total_number_of_bits_per_frame}$,
- Where $\mathrm{total_number_of_bits_per_frame} = \mathrm{number_of_slots} \times \mathrm{number_of_bits_per_slots}$.
- The number of slots is selected by writing to the Number of Slots in Frame bit field in the Clock Unit n Control (CLKCTRLn) register: $\mathrm{number_of_slots} = \mathrm{NBSLOTS} + 1$.
- The number of bits per slot (8, 16, 24, or 32 bit) is selected by writing to the Slot Size bit field in CLKCTRLn: .
- Consequently, $f_{\mathrm{SCKn}} = 8 \times fs \times (\mathrm{NBSLOTS} + 1) \times (\mathrm{SLOTSIZE} + 1)$.

The clock frequencies f_{SCKn} and f_{MCKn} are derived from the generic clock frequency $f_{\mathrm{GCLK_I2S_n}}$:

- $f_{\mathrm{GCLK_I2S_n}} = f_{\mathrm{SCKn}} \times (\mathrm{CLKCTRLn.MCKDIV} + 1)$
  $= 8 \times fs \times (\mathrm{NBSLOTS} + 1) \times (\mathrm{SLOTSIZE} + 1) \times (\mathrm{MCKDIV} + 1)$

  , and
- $f_{\mathrm{GCLK_I2S_n}} = f_{\mathrm{MCKn}} \times (\mathrm{MCKOUTDIV} + 1)$.

Substituting the right hand sides of the two last equations yields:

$$f_{\mathrm{MCKn}} = \frac{f_{\mathrm{GCLK_I2S_n}}}{\mathrm{MCKOUTDIV}+1}$$

$$f_{\mathrm{MCKn}} = \frac{8 \cdot (\mathrm{SLOTSIZE}+1) \cdot (\mathrm{NBSLOTS}+1) \cdot (\mathrm{MCKDIV}+1)}{\mathrm{MCKOUTDIV}+1}$$

If a Host Clock output is not required, the GCLK_I2S generic clock can be configured as SCKn by writing a '0'to CLKCTRLn.MCKDIV. Alternatively, if the frequency of the generic clock is a multiple of the required SCKn frequency, the MCKn-to-SCKn divider can be used with the ratio defined by writing the CLKCTRLn.MCKDIV field.

The FSn pin is used as Word Select in I²S format and as Frame Synchronization in TDM format, as described in 29.6.4 I2S Format - Reception and Transmission Sequence with Word Select and 29.6.5 TDM Format - Reception and Transmission Sequence, respectively.

29.6.2.2 Data Holding Registers

For each Serializer m, the I²S user interface includes a Data m register (DATAm). They are used to access data samples for all data slots.

29.6.2.2.1 Data Reception Mode

In receiver mode, the DATAm registers store the received data.

When a new data word is available in the DATAm register, the Receive Ready bit (RXRDYm) in the Interrupt Flag Status and Clear register (INTFLAG) is set. Reading the DATAm register will clear this bit.

A receive overrun condition occurs if a new data word becomes available before the previous data word has been read from the DATAm register. Then, the Receive Overrun bit in INTFLAG will be set (INTFLAG.RXORm). This interrupt can be cleared by writing a '1' to it.

Downloaded from Arrow.com.

29.6.2.2.2 Data Transmission Mode

In Transmitter mode, the DATAm registers contain the data to be transmitted.

when DATAm is empty, the Transmit Ready bit in the Interrupt Flag Status and Clear register is set (INTFLAG.TXRDYm). Writing to DATAm will clear this bit.

A transmit underrun condition occurs if a new data word needs to be transmitted before it has been written to DATAm. Then, the Transmit Underrun bit in INTFLAG will be set (INTFLAG.TXURm). This interrupt can be cleared by writing a '1' to it. The Transmit Data when Underrun bit in the Serializer n Control register (SERCTRLm.TXSAME) configures whether a zero data word is transmitted in case of underrun (SERCTRLm.TXSAME=0), or the previous data word for the current transmit slot number is transmitted again (SERCTRLm.TXSAME=1).

29.6.3 Host, Controller, and Client Modes

In Host and Controller modes, the I^{2}S provides the Serial Clock, a Word Select/Frame Sync signal and optionally a Host Clock.

In Controller mode, the I^{2}S Serializers are disabled. Only the clocks are enabled and output for external receivers and/or transmitters.

In Client mode, the I^{2}S receives the Serial Clock and the Word Select/Frame Sync Signal from an external host. SCKn and FSn pins are inputs.

29.6.4 I^{2}S Format - Reception and Transmission Sequence with Word Select

As specified in the I^{2}S protocol, data bits are left-adjusted in the Word Select slot, with the MSB transmitted first, starting one clock period after the transition on the Word Select line.

Figure 29-5. I^{2}S Reception and Transmission Sequence

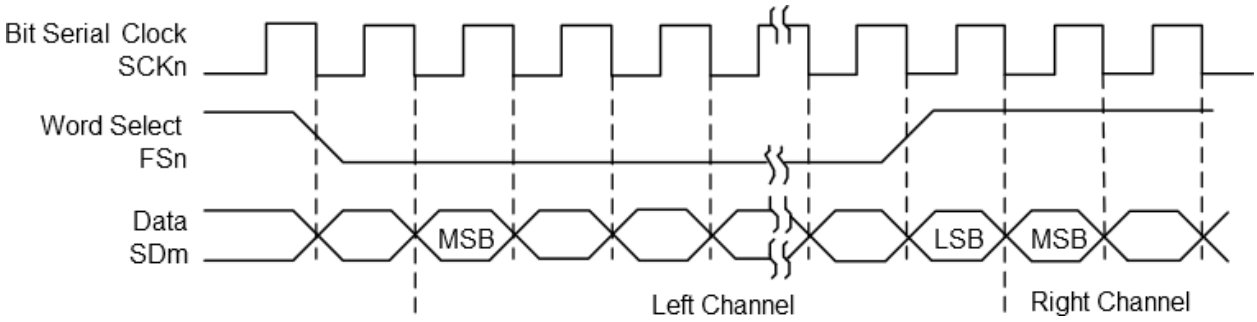

Data bits are sent on the falling edge of the Serial Clock and sampled on the rising edge of the Serial Clock. The Word Select line indicates the channel in transmission, a low level for the left channel and a high level for the right channel.

In I^{2}S format, typical configurations are described below. These configurations do not list all necessary settings, but only basic ones. Other configuration settings are to be done as per requirement such as clock and DMA configurations.

Case 1: I^{2}S 16-bit compact stereo

- Slot size configured as 16 bits (CLKCTRL0.SLOTSIZE = 0x1)
- Number of slots configured as 2 (CLKCTRL0.NBSLOTS = 0x1)
- Data size configured as 16-bit compact stereo (SERCTRL0.DATASIZE = 0x05)
- Data delay from Frame Sync configured as 1-bit delay (CLKCTRLn.BITDELAY = 0x01)
- Frame Sync Width configured as HALF frame (CLKCTRLn.FSWIDTH = 0x01)

Case 2: I^{2}S 24-bit stereo Transmitterwith 24-bit slot

- Slot size configured as 24 bits (CLKCTRL0.SLOTSIZE = 0x2)
- Number of slots configured as 2 (CLKCTRL0.NBSLOTS = 0x1)
- Data size configured as 24 bits (SERCTRL0.DATASIZE = 0x01)
- Data delay from Frame Sync configured as 1-bit delay (CLKCTRLn.BITDELAY = 0x01)

Downloaded from Arrow.com.

- Frame Sync Width configured as HALF frame (CLKCTRLn.FSWIDTH = 0x01)

In both cases, it will ensure that Word select signal is 'low level' for the left channel and 'high level' for the right channel.

The length of transmitted words can be chosen among 8, 16, 18, 20, 24, and 32 bits by writing the Data Word Size bit group in the Serializer Control mregister (SERCTRLm.DATASIZE).

If the slot allows for more data bits than the number of bits specified in the respective DATASIZE field, additional bits are appended to the transmitted or received data word as specified in the SERCTRLm.EXTEND field. If the slot allows less data bits than programmed, the extra bits are not transmitted, or received data word is extended based on the EXTEND field value.

29.6.5 TDM Format - Reception and Transmission Sequence

In Time Division Multiplexed (TDM) format, the number of data slots sent or received within each frame will be (CLKCTRLn.NBSLOTS + 1).

By configuring the CLKCTRLn register (CLKCTRLn.FSWIDTH and CLKCTRLn.FSINV), the Frame Sync pulse width and polarity can be modified.

By configuring SERCTRLm, data bits can be left-adjusted or right-adjusted in the slot. It can also configure the data transmission/reception with either the MSB or the LSB transmitted/received first and starting the transmission/reception either at the transition of the FSn pin or one clock period after.

Figure 29-6. TDM Format Reception and Transmission Sequence

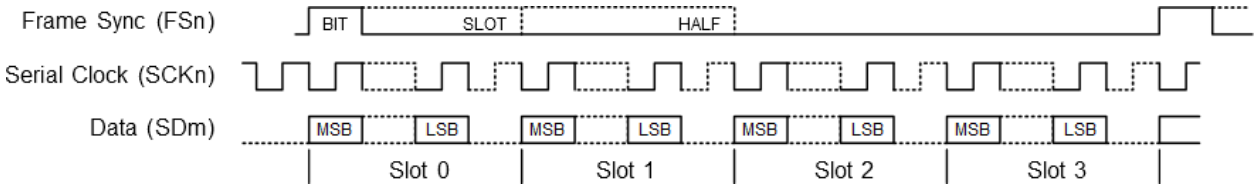

Data bits are sent on the falling edge of the Serial Clock and sampled on the rising edge of the Serial Clock. The FSn pin provides a frame synchronization signal, at the beginning of slot 0. The delay between the frame start and the first data bit is defined by writing the CLKCTRLn.BITDELAY field.

The Frame Sync pulse can be either one SCKn period (BIT), one slot (SLOT), or one half frame (HALF). This selection is done by writing the CLKCTRLn.FSWIDTH field.

The number of slots is selected by writing the CLKCTRLn.NBSLOTS field.

The number of bits in each slot is selected by writing the CLKCTRLn.SLOTSIZE field.

The length of transmitted words can be chosen among 8, 16, 18, 20, 24, and 32 bits by writing the DATASIZE field in the Serializer Control register (SERCTRLm).

If the slot allows more data bits than the number of bits specified in the SERCTRLmDATASIZE bit field, additional bits are appended to the transmitted or received data word as specified in the SERCTRLmEXTEND bit field. If the slot allows less data bits than programmed, the extra bits are not transmitted, or received data word is extended based on the EXTEND field value.

29.6.6 PDM Reception

In Pulse Density Modulation (PDM) reception mode, continuous 1-bit data samples are available on the SDI line on each SCKn rising edge, for example, by a MEMS microphone with PDM interface. When using two channel PDM microphones, the second one (right channel) is configured to output data on each SCKn falling edge.

For one PDM microphone, the I^2S controller must be configured in normal Receive mode with one slot and 16-bit or 32-bit data size, so that 16 or 32 samples of the microphone are stored into each data word.

For two PDM microphones, the I^2S controller must be configured in PDM2 mode with one slot and 32-bit data size. The Serializer will store 16 samples of each microphone in one half of the data word, with left microphone bits in lower half and right microphone bits in upper half, like in compact stereo format.

Based on oversampling frequency requirement from PDM microphone, the SCKn frequency must be configured in the I^2S controller.

Downloaded from Arrow.com.

> A microphone that requires a sampling frequency of *fs* = 48 kHz and an oversampling frequency of *fo*=64 × *fs* would require an SCKn frequency of 3.072 MHz.

After selecting a proper frequency for GCLK_I2S_n and according Host Clock Division Factor in the Clock Unit n Control register (CLKCTRLn.MCKDIV), SCKn must be selected as per required frequency.

In PDM mode, only the clock and data line (SCKn and SDIn) pins are used.

To configure PDM2 mode, set SLOTSIZE = 0x01 (16-bits), NBSLOTS = 0x01 (2 slots) and SERCTRL0.DATASIZE = 0x00 (32-bit).

29.6.7 Data Formatting Unit

To allow more flexibility, data words received by Serializer m will be formatted by the Receive Formatting Unit before being stored into the Data Holding register (RXDATA). The data words written into TXDATA register will be formatted by the Transmit Formatting Unit before transmission by Serializer m .

The formatting options are defined in SERCTRLm:

- SLOTADJ for left or right justification in the slot
- BITREV for bit reversal
- WORDADJ for left or right justification in the data word
- EXTEND for extension to the word size

29.6.8 DMA, Interrupts and Events

Table 29-4. Module Request for I²S

Condition	DMA request	DMA request is cleared	Interrupt request	Event input/ output
Receive Ready	YES	When data is read	YES	
Transmit Ready (Buffer empty)	YES	When data is written	YES	
Receive Overrun			YES	
Transmit Underrun			YES	

29.6.8.1 DMA Operation

Each Serializer can be connected either to one single DMAC channel or to one DMAC channel per data slot in stereo mode. This is selected by writing the SERCTRLm.DMA bit:

Table 29-5. I²C DMA Request Generation

SERCTRLm.DMA	Mode	Slot Parity	DMA Request Trigger
0	Receiver	all	I2S_DMAC_ID_RX_m
	Transmitter	all	I2S_DMAC_ID_TX_m
1	Receiver	even	I2S_DMAC_ID_RX_0
		odd	I2S_DMAC_ID_RX_1
	Transmitter	even	I2S_DMAC_ID_TX_0
		odd	I2S_DMAC_ID_TX_1

The DMAC reads from the DATAm register and writes to the DATAm register for all data slots, successively.

The DMAC transfers may use 32-, 16- or or 8-bit transactions according to the value of the SERCTRLm.DATASIZE field. 8-bit compact stereo uses 16-bit and 16-bit compact stereo uses 32-bit transactions.

29.6.8.2 Interrupts

The I²S has the following interrupt sources:

Downloaded from Arrow.com.

- Receive Ready (RXRDYm): this is an asynchronous interrupt and can be used to wake-up the device from any sleep mode.
- Receive Overrun (RXORm): this is an asynchronous interrupt and can be used to wake-up the device from any sleep mode.
- Transmit Ready (TXRDYm): this is an asynchronous interrupt and can be used to wake-up the device from any sleep mode.
- Transmit Underrun (TXURm): this is an asynchronous interrupt and can be used to wake-up the device from any sleep mode.

Each interrupt source has an interrupt flag associated with it. The interrupt flag in the Interrupt Flag Status and Clear (INTFLAG) register is set when the interrupt condition occurs. Each interrupt can be individually enabled by writing a one to the corresponding bit in the Interrupt Enable Set (INTENSET) register, and disabled by writing a one to the corresponding bit in the Interrupt Enable Clear (INTENCLR) register. An interrupt request is generated when the interrupt flag is set and the corresponding interrupt is enabled. The interrupt request remains active until the interrupt flag is cleared, the interrupt is disabled, or the I^2S is reset. See INTFLAG register for details on how to clear interrupt flags. All interrupt requests from the peripheral are ORed together on system level to generate one combined interrupt request to the NVIC. Refer to *Nested Vector Interrupt Controller* for details. The user must read the INTFLAG register to determine which interrupt condition is present.

Note: Interrupts must be globally enabled for interrupt requests to be generated. Refer to *Nested Vector Interrupt Controller* for details.

Related Links

11.2 Nested Vector Interrupt Controller

29.6.8.3 Events

Not applicable.

29.6.9 Sleep Mode Operation

The I^2S continues to operate in all sleep modes that still provide its clocks.

29.6.10 Synchronization

Due to asynchronicity between the main clock domain and the peripheral clock domains, some registers need to be synchronized when written or read.

When executing an operation that requires synchronization, the corresponding Synchronization Busy bit in the Synchronization Busy register (SYNCBUSY) will be set immediately, and cleared when synchronization is complete.

If an operation that requires synchronization is executed while the corresponding SYNCBUSY bit is '1', a peripheral bus error is generated.

The following bits are synchronized when written:

- Software Reset bit in the Control A register (CTRLA.SWRST). SYNCBUSY.SWRST is set to '1' while synchronization is in progress.
- Enable bit in the Control A register (CTRLA.ENABLE). SYNCBUSY.ENABLE is set to '1' while synchronization is in progress.
- Clock Unit x Enable bits in the Control A register (CTRLA.CKENx). SYNCBUSY.CKENx is set to '1' while synchronization is in progress.
- Serializer x Enable bits in the Control A register (CTRLA.SERENx). SYNCBUSY.SERENx is set to '1' while synchronization is in progress.

The following registers require synchronization when read or written:

- Data n registers (DATAn), Read-Synchronized when Serializer n is in Rx mode or Write-Synchronized when in Tx mode. SYNCBUSY.DATAn is set to '1' while synchronization is in progress.

Synchronization is denoted by the Read-Synchronized or Write-Synchronized property in the register description.

Related Links

14.3 Register Synchronization

Downloaded from Arrow.com.

29.6.11 Loop-Back Mode

For debugging purposes, the I²S can be configured to loop back the Transmitter to the Receiver. Writing a '1' to the Loop-Back Test Mode bit in the Serializer m Control register (SERCTRLm.RXLOOP) configures SDm as input and the remaining SD as output. Both SD will be connected internally, so the transmitted data is also received. For instance, writing SERCTRL0.RXLOOP=1 will connect SD1 output to SD0 input, or writing SERCTRL1.RXLOOP=1 will connect SD0 output to SD1 input.

RXLOOP=1 will connect the Transmitter output of the other Serializer to the Receiver input of the current Serializer. For the Loop-back Mode to work, the current Serializer must be configured as receiver and the other Serializer as transmitter.

Writing SERCTRLm.RXLOOP=0 will restore normal behavior and connection between Serializer m and SDm pin input.

As for other changes to the Serializer configuration, Serializer m must be disabled before writing the SERCTRLm register to update SERCTRLm.RXLOOP.

29.7 I²S Application Examples

The I²S can support several serial communication modes used in audio or high-speed serial links. Some standard applications are shown in the following figures.

Note: The following examples are not a complete list of serial link applications supported by the I²S.

Figure 29-7. Audio Application Block Diagram

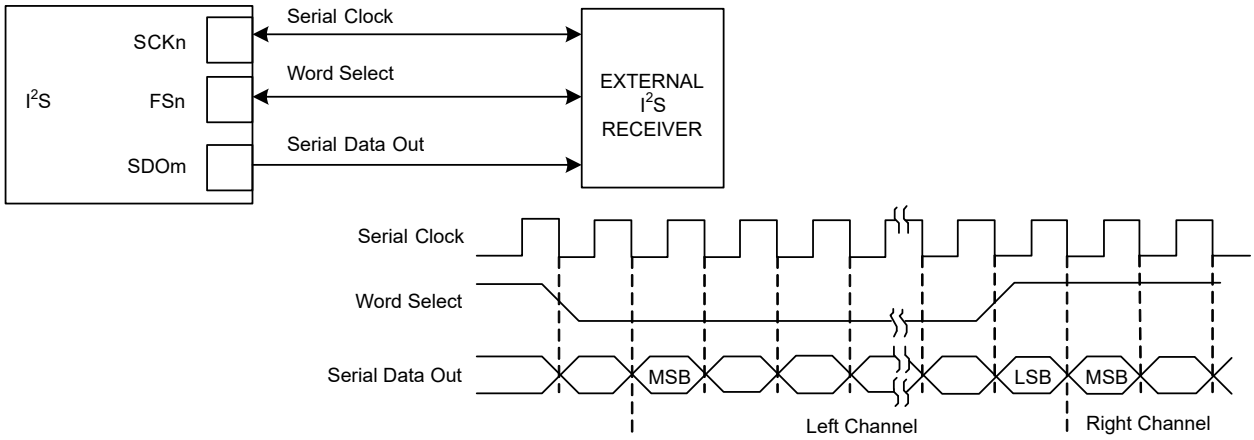

Downloaded from Arrow.com.

Figure 29-8. Time Slot Application Block Diagram

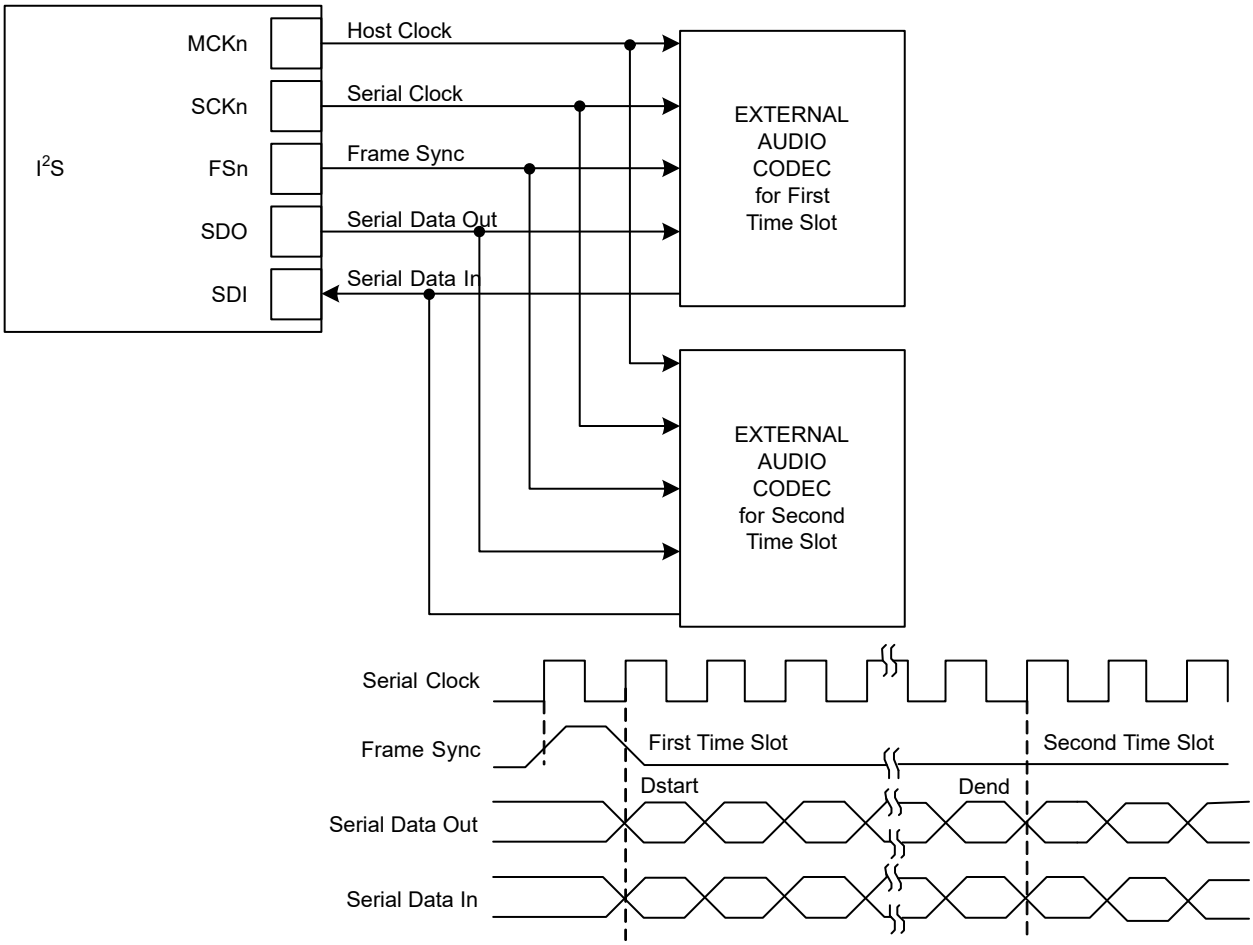

Figure 29-9. Codec Application Block Diagram

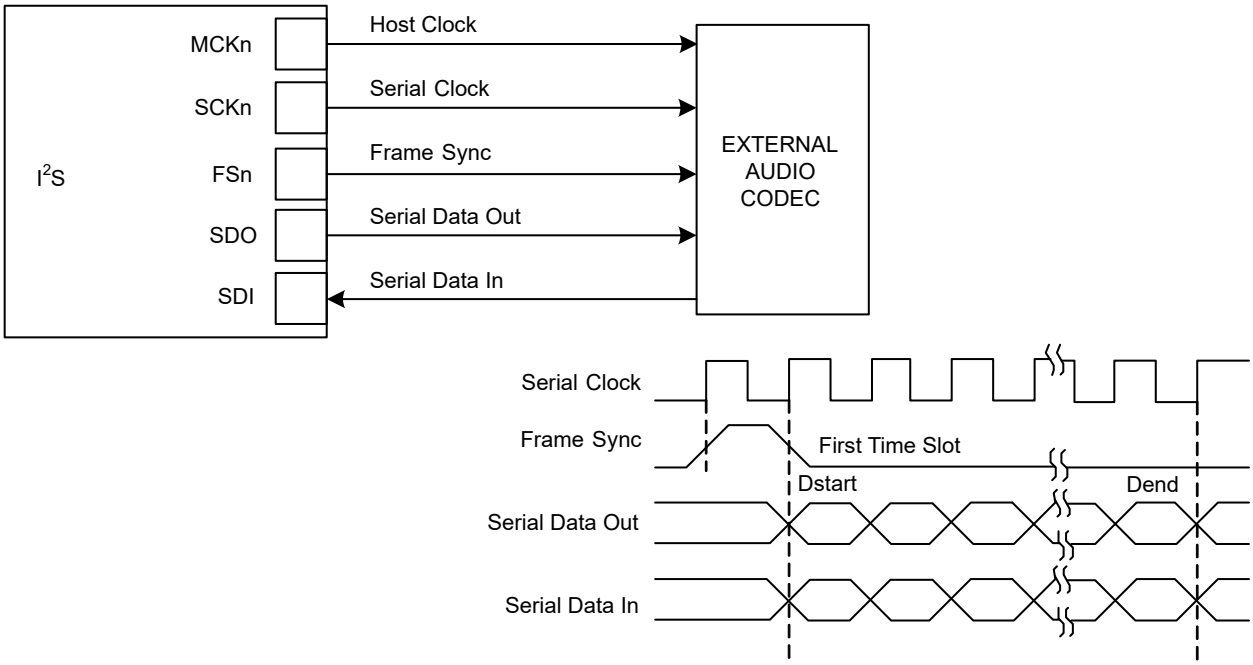

Downloaded from Arrow.com.

Figure 29-10. PDM Microphones Application Block Diagram

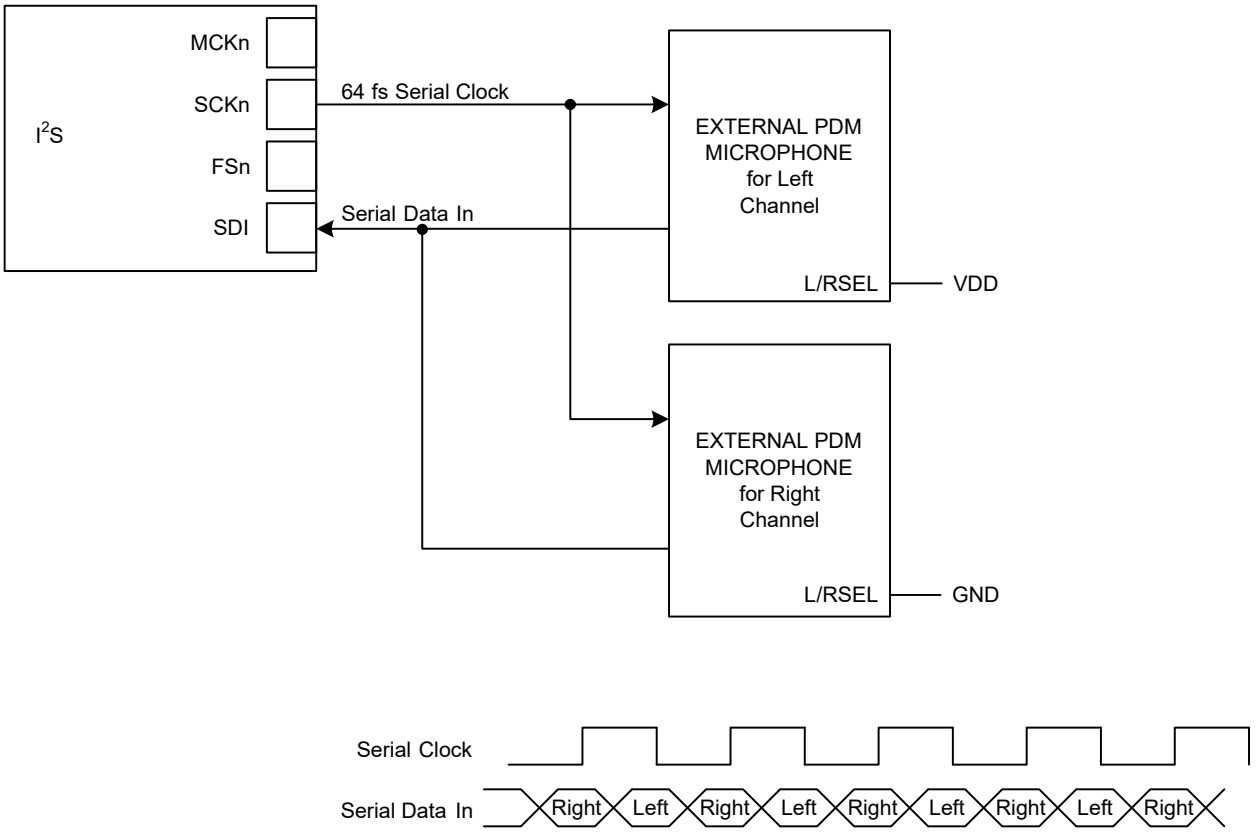

Downloaded from Arrow.com.

29.8 Register Summary

Offset	Name	Bit Pos.	7	6	5	4	3	2	1	0
0x00	CTRLA	7:0			SEREN1	SEREN0	CKEN1	CKEN0	ENABLE	SWRST
0x01 ... 0x03	Reserved									
0x04	CLKCTRL0	7:0	BITDELAY	FSWIDTH[1:0]		NBSLOTS[2:0]			SLOTSIZE[1:0]	
		15:8				SCKSEL	FSINV			FSSEL
		23:16	MCKDIV[4:0]					MCKEN		MCKSEL
		31:24	MCKOUTINV	SCKOUTINV	FSOUTINV	MCKOUTDIV[4:0]				
0x08	CLKCTRL1	7:0	BITDELAY	FSWIDTH[1:0]		NBSLOTS[2:0]			SLOTSIZE[1:0]	
		15:8				SCKSEL	FSINV			FSSEL
		23:16	MCKDIV[4:0]					MCKEN		MCKSEL
		31:24	MCKOUTINV	SCKOUTINV	FSOUTINV	MCKOUTDIV[4:0]				
0x0C	INTENCLR	7:0			RXOR1	RXOR0			RXRDY1	RXRDY0
		15:8			TXUR1	TXUR0			TXRDY1	TXRDY0
0x0E ... 0x0F	Reserved									
0x10	INTENSET	7:0			RXOR1	RXOR0			RXRDY1	RXRDY0
		15:8			TXUR1	TXUR0			TXRDY1	TXRDY0
0x12 ... 0x13	Reserved									
0x14	INTFLAG	7:0			RXOR1	RXOR0			RXRDY1	RXRDY0
		15:8			TXUR1	TXUR0			TXRDY1	TXRDY0
0x16 ... 0x17	Reserved									
0x18	SYNCBUSY	7:0			SEREN1	SEREN0	CKEN1	CKEN0	ENABLE	SWRST
		15:8							DATA1	DATA0
0x1A ... 0x1F	Reserved									
0x20	SERCTRL0	7:0	SLOTADJ		CLKSEL	TXSAME	TXDEFAULT[1:0]		SERMODE[1:0]	
		15:8	BITREV	EXTEND[1:0]		WORDADJ		DATASIZE[2:0]		
		23:16	SLOTDIS7	SLOTDIS6	SLOTDIS5	SLOTDIS4	SLOTDIS3	SLOTDIS2	SLOTDIS1	SLOTDIS0
		31:24						RXLOOP	DMA	MONO
0x24	SERCTRL1	7:0	SLOTADJ		CLKSEL	TXSAME	TXDEFAULT[1:0]		SERMODE[1:0]	
		15:8	BITREV	EXTEND[1:0]		WORDADJ		DATASIZE[2:0]		
		23:16	SLOTDIS7	SLOTDIS6	SLOTDIS5	SLOTDIS4	SLOTDIS3	SLOTDIS2	SLOTDIS1	SLOTDIS0
		31:24						RXLOOP	DMA	MONO
0x28 ... 0x2F	Reserved									
0x30	DATA0	7:0	DATA[7:0]							
		15:8	DATA[15:8]							
		23:16	DATA[23:16]							
		31:24	DATA[31:24]							
0x34	DATA1	7:0	DATA[7:0]							
		15:8	DATA[15:8]							
		23:16	DATA[23:16]							
		31:24	DATA[31:24]							
0x34	RXDATA	7:0	DATA[7:0]							
		15:8	DATA[15:8]							
		23:16	DATA[23:16]							
		31:24	DATA[31:24]							

Downloaded from Arrow.com.

29.9 Register Description

Registers can be 8, 16, or 32 bits wide. Atomic 8-, 16-, and 32-bit accesses are supported. In addition, the 8-bit quarters and 16-bit halves of a 32-bit register, and the 8-bit halves of a 16-bit register can be accessed directly.

Some registers require synchronization when read and/or written. Synchronization is denoted by the "Read-Synchronized" and/or "Write-Synchronized" property in each individual register description.

Some registers are enable-protected, meaning they can only be written when the module is disabled. Enable-protection is denoted by the "Enable-Protected" property in each individual register description.

Optional write-protection by the Peripheral Access Controller (PAC) is denoted by the "PAC Write-Protection" property in each individual register description.

Downloaded from Arrow.com.

29.9.1 Control A

Name: CTRLA
Offset: 0x00
Reset: 0x00
Property: PAC Write-Protection

Bit	7	6	5	4	3	2	1	0
			SEREN1	SEREN0	CKEN1	CKEN0	ENABLE	SWRST
Access			R/W	R/W	R/W	R/W	R/W	R/W
Reset			0	0	0	0	0	0

Bits 4, 5 – SERENx Serializer x Enable [x=1..0]
Writing a '0' to this bit will disable the Serializer x.
Writing a '1' to this bit will enable the Serializer x.

Value	Description
0	The Serializer x is disabled.
1	The Serializer x is enabled.

Bits 2, 3 – CKENx Clock Unit x Enable [x=1..0]
Writing a '0' to this bit will disable the Clock Unit x.
Writing a '1' to this bit will enable the Clock Unit x.

Value	Description
0	The Clock Unit x is disabled.
1	The Clock Unit x is enabled.

Bit 1 – ENABLE Enable
Writing a '0' to this bit will disable the module.
Writing a '1' to this bit will enable the module.

Value	Description
0	The peripheral is disabled.
1	The peripheral is enabled.

Bit 0 – SWRST Software Reset
Writing a '0' to this bit has no effect.
Writing a '1' to this bit resets all registers to their initial state, and the peripheral will be disabled.
Writing a '1' to CTRL.SWRST will always take precedence, meaning that all other writes in the same write-operation will be discarded.
The I^2S generic clocks must be enabled before triggering Software Reset, hence the logic in all clock domains can be reset.

Value	Description
0	There is no reset operation ongoing.
1	The reset operation is ongoing.

Downloaded from Arrow.com.

29.9.2 Clock Unit n Control

Name: CLKCTRLn
Offset: 0x04 + n*0x04 [n=0..1]
Reset: 0x00000000
Property: Enable-Protected, PAC Write-Protection

Bit	31	30	29	28	27	26	25	24
	MCKOUTINV	SCKOUTINV	FSOUTINV	MCKOUTDIV[4:0]				
Access	R/W	R/W	R/W	R/W	R/W	R/W	R/W	R/W
Reset	0	0	0	0	0	0	0	0

Bit	23	22	21	20	19	18	17	16
	MCKDIV[4:0]					MCKEN		MCKSEL
Access	R/W	R/W	R/W	R/W	R/W	R/W		R/W
Reset	0	0	0	0	0	0		0

Bit	15	14	13	12	11	10	9	8
				SCKSEL	FSINV			FSSEL
Access				R/W	R/W			R/W
Reset				0	0			0

Bit	7	6	5	4	3	2	1	0
	BITDELAY	FSWIDTH[1:0]		NBSLOTS[2:0]			SLOTSIZE[1:0]	
Access	R/W	R/W	R/W	R/W	R/W	R/W	R/W	R/W
Reset	0	0	0	0	0	0	0	0

Bit 31 – MCKOUTINV Host Clock Output Invert

Value	Description
0	The Host Clock n is output without inversion.
1	The Host Clock n is inverted before being output.

Bit 30 – SCKOUTINV Serial Clock Output Invert

Value	Description
0	The Serial Clock n is output without inversion.
1	The Serial Clock n is inverted before being output.

Bit 29 – FSOUTINV Frame Sync Output Invert

Value	Description
0	The Frame Sync n is output without inversion.
1	The Frame Sync n is inverted before being output.

Bits 28:24 – MCKOUTDIV[4:0] Host Clock Output Division Factor
The generic clock selected by MCKSEL is divided by (MCKOUTDIV + 1) to obtain the Host Clock n output.

Bits 23:19 – MCKDIV[4:0] Host Clock Division Factor
The Host Clock n is divided by (MCKDIV + 1) to obtain the Serial Clock n.

Bit 18 – MCKEN Host Clock Enable

Value	Description
0	The Host Clock n division and output is disabled.
1	The Host Clock n division and output is enabled.

Bit 16 – MCKSEL Host Clock Select
This field selects the source of the Host Clock n.

Downloaded from Arrow.com.

MCKSEL	Name	Description
0x0	GCLK	GCLK_I2S_n is used as Host Clock n source
0x1	MCKPIN	MCKn input pin is used as Host Clock n source

Bit 12 – SCKSEL Serial Clock Select
This field selects the source of the Serial Clock n.

SCKSEL	Name	Description
0x0	MCKDIV	Divided Host Clock n is used as Serial Clock n source
0x1	SCKPIN	SCKn input pin is used as Serial Clock n source

Bit 11 – FSINV Frame Sync Invert

Value	Description
0	The Frame Sync n is used without inversion.
1	The Frame Sync n is inverted before being used.

Bit 8 – FSSEL Frame Sync Select
This field selects the source of the Frame Sync n.

FSSEL	Name	Description
0x0	SCKDIV	Divided Serial Clock n is used as Frame Sync n source
0x1	FSPIN	FSn input pin is used as Frame Sync n source

Bit 7 – BITDELAY Data Delay from Frame Sync

BITDELAY	Name	Description
0x0	LJ	Left Justified (0 Bit Delay)
0x1	I2S	I2S (1 Bit Delay)

Bits 6:5 – FSWIDTH[1:0] Frame Sync Width
This field selects the duration of the Frame Sync output pulses.
When not in Burst mode, the Clock unit n operates in continuous mode when enabled, with periodic Frame Sync pulses and Data samples.
In Burst mode, a single Data transfer starts at each Frame Sync pulse; these pulses are 1-bit wide and occur only when a Data transfer is requested. Note that the compact stereo modes (16C and 8C) are not supported in the Burst mode.

FSWIDTH[1:0]	Name	Description
0x0	SLOT	Frame Sync Pulse is 1 Slot wide (default for I^2S protocol)
0x1	HALF	Frame Sync Pulse is half a Frame wide
0x2	BIT	Frame Sync Pulse is 1 Bit wide
0x3	BURST	Clock Unit n operates in Burst mode, with a 1-bit wide Frame Sync pulse per Data sample, only when Data transfer is requested

Bits 4:2 – NBSLOTS[2:0] Number of Slots in Frame
Each Frame for Clock Unit n is composed of (NBSLOTS + 1) Slots.

Bits 1:0 – SLOTSIZE[1:0] Slot Size
Each Slot for Clock Unit n is composed of a number of bits specified by SLOTSIZE.

SLOTSIZE[1:0]	Name	Description
0x0	8	8-bit Slot for Clock Unit n
0x1	16	16-bit Slot for Clock Unit n
0x2	24	24-bit Slot for Clock Unit n
0x3	32	32-bit Slot for Clock Unit n

Downloaded from Arrow.com.

29.9.3 Interrupt Enable Clear

Name: INTENCLR
Offset: 0x0C
Reset: 0x0000
Property: PAC Write-Protection

Bit	15	14	13	12	11	10	9	8
			TXUR1	TXUR0			TXRDY1	TXRDY0
Access			R/W	R/W			R/W	R/W
Reset			0	0			0	0

Bit	7	6	5	4	3	2	1	0
			RXOR1	RXOR0			RXRDY1	RXRDY0
Access			R/W	R/W			R/W	R/W
Reset			0	0			0	0

Bits 12, 13 – TXURx Transmit Underrun x Interrupt Enable [x=1..0]
Writing a '0' to this bit has no effect.
Writing a '1' to this bit will clear the Transmit Underrun x Interrupt Enable bit, which disables the Transmit Underrun x interrupt.

Value	Description
0	The Transmit Underrun x interrupt is disabled.
1	The Transmit Underrun x interrupt is enabled.

Bits 8, 9 – TXRDYx Transmit Ready x Interrupt Enable [x=1..0]
Writing a '0' to this bit has no effect.
Writing a '1' to this bit will clear the Transmit Ready x Interrupt Enable bit, which disables the Transmit Ready x interrupt.

Value	Description
0	The Transmit Ready x interrupt is disabled.
1	The Transmit Ready x interrupt is enabled.

Bits 4, 5 – RXORx Receive Overrun x Interrupt Enable [x=1..0]
Writing a '0' to this bit has no effect.
Writing a '1' to this bit will clear the Receive Overrun x Interrupt Enable bit, which disables the Receive Overrun x interrupt.

Value	Description
0	The Receive Overrun x interrupt is disabled.
1	The Receive Overrun x interrupt is enabled.

Bits 0, 1 – RXRDYx Receive Ready x Interrupt Enable [x=1..0]
Writing a '0' to this bit has no effect.
Writing a '1' to this bit will clear the Receive Ready x Interrupt Enable bit, which disables the Receive Ready x interrupt.

Value	Description
0	The Receive Ready x interrupt is disabled.
1	The Receive Ready x interrupt is enabled.

Downloaded from Arrow.com.

29.9.4 Interrupt Enable Set

Name: INTENSET
Offset: 0x10
Reset: 0x0000
Property: PAC Write-Protection

Bit	15	14	13	12	11	10	9	8
			TXUR1	TXUR0			TXRDY1	TXRDY0
Access			R/W	R/W			R/W	R/W
Reset			0	0			0	0

Bit	7	6	5	4	3	2	1	0
			RXOR1	RXOR0			RXRDY1	RXRDY0
Access			R/W	R/W			R/W	R/W
Reset			0	0			0	0

Bits 12, 13 – TXURx Transmit Underrun x Interrupt Enable [x=1..0]
Writing a '0' to this bit has no effect.
Writing a '1' to this bit will set the Transmit Underrun Interrupt Enable bit, which enables the Transmit Underrun interrupt.

Value	Description
0	The Transmit Underrun interrupt is disabled.
1	The Transmit Underrun interrupt is enabled.

Bits 8, 9 – TXRDYx Transmit Ready x Interrupt Enable [x=1..0]
Writing a '0' to this bit has no effect.
Writing a '1' to this bit will set the Transmit Ready Interrupt Enable bit, which enables the Transmit Ready interrupt.

Value	Description
0	The Transmit Ready interrupt is disabled.
1	The Transmit Ready interrupt is enabled.

Bits 4, 5 – RXORx Receive Overrun x Interrupt Enable [x=1..0]
Writing a '0' to this bit has no effect.
Writing a '1' to this bit will set the Receive Overrun Interrupt Enable bit, which enables the Receive Overrun interrupt.

Value	Description
0	The Receive Overrun interrupt is disabled.
1	The Receive Overrun interrupt is enabled.

Bits 0, 1 – RXRDYx Receive Ready x Interrupt Enable [x=1..0]
Writing a '0' to this bit has no effect.
Writing a '1' to this bit will set the Receive Ready Interrupt Enable bit, which enables the Receive Ready interrupt.

Value	Description
0	The Receive Ready interrupt is disabled.
1	The Receive Ready interrupt is enabled.

Downloaded from Arrow.com.

29.9.5 Interrupt Flag Status and Clear

Name: INTFLAG
Offset: 0x14
Reset: 0x0000
Property: -

Bit	15	14	13	12	11	10	9	8
			TXUR1	TXUR0			TXRDY1	TXRDY0
Access			R/W	R/W			R/W	R/W
Reset			0	0			0	0

Bit	7	6	5	4	3	2	1	0
			RXOR1	RXOR0			RXRDY1	RXRDY0
Access			R/W	R/W			R/W	R/W
Reset			0	0			0	0

Bits 12, 13 – TXURx Transmit Underrun x [x=1..0]
This flag is cleared by writing a '1' to it.
This flag is set when a Transmit Underrun condition occurs in Sequencer x, and will generate an interrupt request if INTENCLR/SET.TXURx is set to '1'.
Writing a '0' to this bit has no effect.
Writing a '1' to this bit will clear the Transmit Underrun x interrupt flag.

Bits 8, 9 – TXRDYx Transmit Ready x [x=1..0]
This flag is cleared by writing to DATAx register or writing a '1' to it.
This flag is set when Sequencer x is ready to accept a new data word to be transmitted, and will generate an interrupt request if INTENCLR/SET.TXRDYx is set to '1'.
Writing a '0' to this bit has no effect.
Writing a '1' to this bit will clear the Transmit Ready x interrupt flag.

Bits 4, 5 – RXORx Receive Overrun x [x=1..0]
This flag is cleared by writing a '1' to it.
This flag is set when a Receive Overrun condition occurs in Sequencer x, and will generate an interrupt request if INTENCLR/SET.RXORx is set to '1'.
Writing a '0' to this bit has no effect.
Writing a '1' to this bit will clear the Receive Overrun x interrupt flag.

Bits 0, 1 – RXRDYx Receive Ready x [x=1..0]
This flag is cleared by reading from DATAx register or writing a '1' to it.
This flag is set when a Sequencer x has received a new data word, and will generate an interrupt request if INTENCLR/SET.RXRDYx is set to '1'.
Writing a '0' to this bit has no effect.
Writing a '1' to this bit will clear the Receive Ready x interrupt flag.

Downloaded from Arrow.com.

29.9.6 Synchronization Busy

Name: SYNCBUSY
Offset: 0x18
Reset: 0x0000
Property: -

Bit	15	14	13	12	11	10	9	8
							DATA1	DATA0
Access							R	R
Reset							0	0

Bit	7	6	5	4	3	2	1	0
			SEREN1	SEREN0	CKEN1	CKEN0	ENABLE	SWRST
Access			R	R	R	R	R	R
Reset			0	0	0	0	0	0

Bits 8, 9 – DATAx Data x Synchronization Status [x=1..0]
Bit DATAx is cleared when the synchronization of DATA Holding register (DATAx) between the clock domains is complete.
Bit DATAx is set when the synchronization of DATA Holding register (DATAx) between the clock domains is started.

Bits 4, 5 – SERENx Serializer x Enable Synchronization Status [x=1..0]
Bit SERENx is cleared when the synchronization of the CTRLA.SERENx bit between the clock domains is complete.
Bit SERENx is set when the synchronization of the CTRLA.SERENx bit between the clock domains is started.

Bits 2, 3 – CKENx Clock Unit x Enable Synchronization Status [x=1..0]
Bit CKENx is cleared when the synchronization of the CTRLA.CKENx bit between the clock domains is complete.
Bit CKENx is set when the synchronization of the CTRLA.CKENx bit between the clock domains is started.

Bit 1 – ENABLE Enable Synchronization Status
This bit is cleared when the synchronization of the CTRLA.ENABLE bit between the clock domains is complete.
This bit is set when the synchronization of the CTRLA.ENABLE bit between the clock domains is started.

Bit 0 – SWRST Software Reset Synchronization Status
This bit is cleared when the synchronization of the CTRLA.SWRST bit between the clock domains is complete.
This bit is set when the synchronization of the CTRLA.SWRST bit between the clock domains is started.

Downloaded from Arrow.com.

29.9.7 Serializer n Control

Name: SERCTRLn
Offset: 0x20 + n*0x04 [n=0..1]
Reset: 0x00000000
Property: Enable-Protected, PAC Write-Protection

Bit	31	30	29	28	27	26	25	24
						RXLOOP	DMA	MONO
Access						R/W	R/W	R/W
Reset						0	0	0

Bit	23	22	21	20	19	18	17	16
	SLOTDIS7	SLOTDIS6	SLOTDIS5	SLOTDIS4	SLOTDIS3	SLOTDIS2	SLOTDIS1	SLOTDIS0
Access	R/W	R/W	R/W	R/W	R/W	R/W	R/W	R/W
Reset	0	0	0	0	0	0	0	0

Bit	15	14	13	12	11	10	9	8
	BITREV	EXTEND[1:0]		WORDADJ		DATASIZE[2:0]		
Access	R/W	R/W	R/W	R/W		R/W	R/W	R/W
Reset	0	0	0	0		0	0	0

Bit	7	6	5	4	3	2	1	0
	SLOTADJ		CLKSEL	TXSAME	TXDEFAULT[1:0]		SERMODE[1:0]	
Access	R/W		R/W	R/W	R/W	R/W	R/W	R/W
Reset	0		0	0	0	0	0	0

Bit 26 – RXLOOP Loop-back Test Mode
This bit enables a loop-back test mode:

Value	Description
0	Each Receiver uses its SDn pin as input (default mode).
1	Receiver uses as input the transmitter output of the other Serializer in the pair: e.g. SD1 for SD0 or SD0 for SD1.

Bit 25 – DMA Single or Multiple DMA Channels
This bit selects whether even- and odd-numbered slots use separate DMA channels or the same DMA channel.

DMA	Name	Description
0x0	SINGLE	Single DMA channel
0x1	MULTIPLE	One DMA channel per data channel

Bit 24 – MONO Mono Mode.

MONO	Name	Description
0x0	STEREO	Normal mode
0x1	MONO	Left channel data is duplicated to right channel

Bits 16, 17, 18, 19, 20, 21, 22, 23 – SLOTDISx Slot x Disabled for this Serializer [x=7..0]
This field allows disabling some slots in each transmit frame:

Value	Description
0	Slot x is used for data transfer.
1	Slot x is not used for data transfer and will be output as specified in the TXDEFAULT field.

Bit 15 – BITREV Data Formatting Bit Reverse
This bit allows changing the order of data bits in the word in the Formatting Unit.

Downloaded from Arrow.com.

BITREV	Name	Description
0x0	MSBIT	Transfer Data Most Significant Bit (MSB) first (default for I2S protocol)
0x1	LSBIT	Transfer Data Least Significant Bit (LSB) first

Bits 14:13 – EXTEND[1:0] Data Formatting Bit Extension
This field defines the bit value used to extend data samples in the Formatting Unit.

EXTEND[1:0]	Name	Description
0x0	ZERO	Extend with zeros
0x1	ONE	Extend with ones
0x2	MSBIT	Extend with Most Significant Bit
0x3	LSBIT	Extend with Least Significant Bit

Bit 12 – WORDADJ Data Word Formatting Adjust
This field defines left or right adjustment of data samples in the word in the Formatting Unit. for details.

WORDADJ	Name	Description
0x0	RIGHT	Data is right adjusted in word
0x1	LEFT	Data is left adjusted in word

Bits 10:8 – DATASIZE[2:0] Data Word Size
This field defines the number of bits in each data sample. For 8-bit compact stereo, two 8-bit data samples are packed in bits 15 to 0 of the DATAm register. For 16-bit compact stereo, two 16-bit data samples are packed in bits 31 to 0 of the DATAm register.

DATASIZE[2:0]	Name	Description
0x0	32	32 bits
0x1	24	24 bits
0x2	20	20 bits
0x3	18	18 bits
0x4	16	16 bits
0x5	16C	16 bits compact stereo
0x6	8	8 bits
0x7	8C	8 bits compact stereo

Bit 7 – SLOTADJ Data Slot Formatting Adjust
This field defines left or right adjustment of data samples in the slot.

SLOTADJ	Name	Description
0x0	RIGHT	Data is right adjusted in slot
0x1	LEFT	Data is left adjusted in slot

Bit 5 – CLKSEL Clock Unit Selection.

CLKSEL	Name	Description
0x0	CLK0	Use Clock Unit 0
0x1	CLK1	Use Clock Unit 1

Bit 4 – TXSAME Transmit Data when Underrun.

TXSAME	Name	Description
0x0	ZERO	Zero data transmitted in case of underrun
0x1	SAME	Last data transmitted in case of underrun

Bits 3:2 – TXDEFAULT[1:0] Line Default Line when Slot Disabled
This field defines the default value driven on the SDn output pin during all disabled Slots.

Downloaded from Arrow.com.

TXDEFAULT[1:0]	Name	Description
0x0	ZERO	Output Default Value is 0
0x1	ONE	Output Default Value is 1
0x2		Reserved
0x3	HIZ	Output Default Value is high impedance

Bits 1:0 – SERMODE[1:0] Serializer Mode.

SERMODE[1:0]	Name	Description
0x0	RX	Receive
0x1	TX	Transmit
0x2	PDM2	Receive one PDM data on each serial clock edge
0x3		Reserved

Downloaded from Arrow.com.

29.9.8 Data Holding m

Name: DATAm
Offset: 0x30 + m*0x04 [m=0..1]
Reset: 0x00000000
Property: Read-Synchronized, Write-Synchronized

Bit	31	30	29	28	27	26	25	24
	DATA[31:24]							
Access	R/W	R/W	R/W	R/W	R/W	R/W	R/W	R/W
Reset	0	0	0	0	0	0	0	0

Bit	23	22	21	20	19	18	17	16
	DATA[23:16]							
Access	R/W	R/W	R/W	R/W	R/W	R/W	R/W	R/W
Reset	0	0	0	0	0	0	0	0

Bit	15	14	13	12	11	10	9	8
	DATA[15:8]							
Access	R/W	R/W	R/W	R/W	R/W	R/W	R/W	R/W
Reset	0	0	0	0	0	0	0	0

Bit	7	6	5	4	3	2	1	0
	DATA[7:0]							
Access	R/W	R/W	R/W	R/W	R/W	R/W	R/W	R/W
Reset	0	0	0	0	0	0	0	0

Bits 31:0 – DATA[31:0] Sample Data
This register is used to transfer data to or from Serializer n.
Data samples written to DATAn register will be sent to Serializer n for transmission, through the Transmit Formatting Unit that will apply the formatting specified in the SERCTRLn register.
Data samples received by Serializer n will be available for reading from DATAn register, through the Receive Formatting Unit, according to formatting information for Serializer n in the SERCTRLn register.

Downloaded from Arrow.com.

29.9.9 Rx Data

Name: RXDATA
Offset: 0x34
Reset: 0x00000000
Property: Read-Synchronized

Bit	31	30	29	28	27	26	25	24
	DATA[31:24]							
Access	R/W	R/W	R/W	R/W	R/W	R/W	R/W	R/W
Reset	0	0	0	0	0	0	0	0

Bit	23	22	21	20	19	18	17	16
	DATA[23:16]							
Access	R/W	R/W	R/W	R/W	R/W	R/W	R/W	R/W
Reset	0	0	0	0	0	0	0	0

Bit	15	14	13	12	11	10	9	8
	DATA[15:8]							
Access	R/W	R/W	R/W	R/W	R/W	R/W	R/W	R/W
Reset	0	0	0	0	0	0	0	0

Bit	7	6	5	4	3	2	1	0
	DATA[7:0]							
Access	R/W	R/W	R/W	R/W	R/W	R/W	R/W	R/W
Reset	0	0	0	0	0	0	0	0

Bits 31:0 – DATA[31:0] Sample Data
This register is used to transfer data from the Rx Serializer.
Data samples received by Rx Serializer will be available for reading from RXDATA register, through the Receive Formatting Unit, according to formatting information for Rx Serializer in the RXCTRL register.

Downloaded from Arrow.com.

30. TC – Timer/Counter

30.1 Overview

The TC consists of a counter, a prescaler, compare/capture channels and control logic. The counter can be set to count events, or it can be configured to count clock pulses. The counter, together with the compare/capture channels, can be configured to timestamp input events, allowing capture of frequency and pulse width. It can also perform waveform generation, such as frequency generation and pulse-width modulation (PWM).

30.2 Features

- Selectable configuration
  - Up to five 16-bit Timer/Counters (TC), each configurable as:
    - 8-bit TC with two compare/capture channels
    - 16-bit TC with two compare/capture channels
    - 32-bit TC with two compare/capture channels, by using two TCs
- Waveform generation
  - Frequency generation
  - Single-slope pulse-width modulation
- Input capture
  - Event capture
  - Frequency capture
  - Pulse-width capture
- One input event
- Interrupts/output events on:
  - Counter overflow/underflow
  - Compare match or capture
- Internal prescaler
- Can be used with DMA and to trigger DMA transactions

Downloaded from Arrow.com.

30.3 Block Diagram

Figure 30-1. Timer/Counter Block Diagram

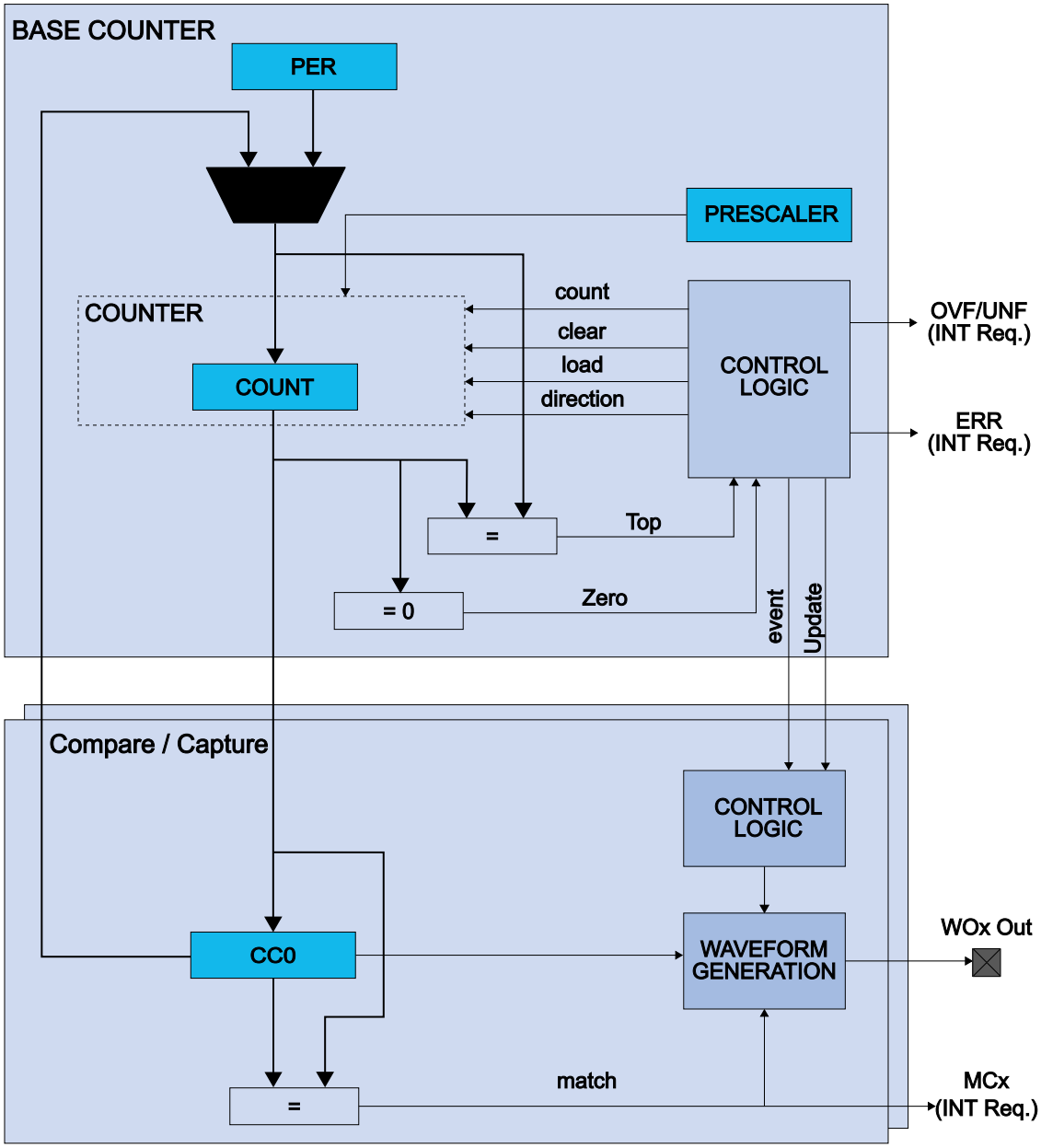

30.4 Signal Description

Signal Name	Type	Description
WO[1:0]	Digital output	Waveform output

Refer to *I/O Multiplexing and Considerations* for details on the pin mapping for this peripheral. One signal can be mapped on several pins.

Downloaded from Arrow.com.

Related Links

7. I/O Multiplexing and Considerations

30.5 Product Dependencies

In order to use this peripheral, other parts of the system must be configured correctly, as described below.

30.5.1 I/O Lines

In order to use the I/O lines of this peripheral, the I/O pins must be configured using the I/O Pin Controller (PORT).

Related Links

23. PORT - I/O Pin Controller

30.5.2 Power Management

This peripheral can continue to operate in any sleep mode where its source clock is running. The interrupts can wake up the device from sleep modes. Events connected to the event system can trigger other operations in the system without exiting sleep modes.

Related Links

16. PM – Power Manager

30.5.3 Clocks

The TC bus clock (CLK_TCx_APB, where x represents the specific TC instance number) can be enabled and disabled in the Power Manager, and the default state of CLK_TCx_APB can be found in the *Peripheral Clock Masking* section in “PM – Power Manager”.

The different TC instances are paired, even and odd, starting from TC3, and use the same generic clock, GCLK_TCx. This means that the TC instances in a TC pair cannot be set up to use different GCLK_TCx clocks.

This generic clock is asynchronous to the user interface clock (CLK_TCx_APB). Due to this asynchronicity, accessing certain registers will require synchronization between the clock domains. Refer to 30.6.6 Synchronization for further details.

Related Links

16.6.2.6 Peripheral Clock Masking

30.5.4 DMA

The DMA request lines are connected to the DMA Controller (DMAC). In order to use DMA requests with this peripheral the DMAC must be configured first. Refer to *DMAC – Direct Memory Access Controller* for details.

Related Links

20. DMAC – Direct Memory Access Controller

30.5.5 Interrupts

The interrupt request line is connected to the Interrupt Controller. In order to use interrupt requests of this peripheral, the Interrupt Controller (NVIC) must be configured first. Refer to *Nested Vector Interrupt Controller* for details.

Related Links

11.2 Nested Vector Interrupt Controller

30.5.6 Events

The events of this peripheral are connected to the Event System.

Related Links

24. EVSYS – Event System

30.5.7 Debug Operation

When the CPU is halted in debug mode, this peripheral will halt normal operation. This peripheral can be forced to continue operation during debugging - refer to the Debug Control (DBGCTRL) register for details.

Downloaded from Arrow.com.

30.5.8 Register Access Protection

Registers with write-access can be optionally write-protected by the Peripheral Access Controller (PAC), except for the following:

- Interrupt Flag register (INTFLAG)
- Status register (STATUS)
- Read Request register (READREQ)
- Count register (COUNT)
- Period register (PER)
- Compare/Capture Value registers (CCx)

Note: Optional write-protection is indicated by the "PAC Write-Protection" property in the register description.

Write-protection does not apply for accesses through an external debugger.

30.5.9 Analog Connections

Not applicable.

30.6 Functional Description

30.6.1 Principle of Operation

The following definitions are used throughout the documentation:

Table 30-1. Timer/Counter Definitions

Name	Description
TOP	The counter reaches TOP when it becomes equal to the highest value in the count sequence. The TOP value can be the same as Period (PER) or the Compare Channel 0 (CC0) register value depending on the waveform generator mode in Waveform Output Operations.
ZERO	The counter is ZERO when it contains all zeroes
MAX	The counter reaches MAX when it contains all ones
UPDATE	The timer/counter signals an update when it reaches ZERO or TOP, depending on the direction settings.
Timer	The timer/counter clock control is handled by an internal source
Counter	The clock control is handled externally (e.g. counting external events)
CC	For compare operations, the CC are referred to as “compare channels” For capture operations, the CC are referred to as “capture channels.”

The counter in the TC can either count events from the Event System, or clock ticks of the GCLK_TCx clock, which may be divided by the prescaler.

The counter value is passed to the CCx where it can be either compared to user-defined values or captured.

The compare and capture registers (CCx) and counter register (COUNT) can be configured as 8-, 16- or 32-bit registers, with according MAX values. Mode settings determine the maximum range of the counter.

In 8-bit mode, Period Value (PER) is also available. The counter range and the operating frequency determine the maximum time resolution achievable with the TC peripheral.

The TC can be set to count up or down. Under normal operation, the counter value is continuously compared to the TOP or ZERO value to determine whether the counter has reached that value. On a comparison match the TC can request DMA transactions, or generate interrupts or events for the Event System. On a comparison match the TC can request DMA transactions, or generate interrupts or events for the Event System.

Downloaded from Arrow.com.

In compare operation, the counter value is continuously compared to the values in the CCx registers. In case of a match the TC can request DMA transactions, or generate interrupts or events for the Event System. In waveform generator mode, these comparisons are used to set the waveform period or pulse width.

Capture operation can be enabled to perform input signal period and pulse width measurements, or to capture selectable edges from an internal event from Event System.

30.6.2 Basic Operation

30.6.2.1 Initialization

The following registers are enable-protected, meaning that they can only be written when the TC is disabled (CTRLA.ENABLE =0):

- Control A register (CTRLA), except the Run Standby (RUNSTDBY), Enable (ENABLE) and Software Reset (SWRST) bits

Enable-protected bits in the CTRLA register can be written at the same time as CTRLA.ENABLE is written to '1', but not at the same time as CTRLA.ENABLE is written to '0'. Enable-protection is denoted by the "Enable-Protected" property in the register description. The following bits are enable-protected:

- Event Action bits in the Event Control register (EVCTRL.EVACT)

Before enabling the TC, the peripheral must be configured by the following steps:

1. Enable the TC bus clock (CLK_TCx_APB).
2. Select 8-, 16- or 32-bit counter mode via the TC Mode bit group in the Control A register (CTRLA.MODE). The default mode is 16-bit.
3. Select one wave generation operation in the Waveform Generation Operation bit group in the Control A register (CTRLA.WAVEGEN).
4. If desired, the GCLK_TCx clock can be prescaled via the Prescaler bit group in the Control A register (CTRLA.PRESCALER).
   – If the prescaler is used, select a prescaler synchronization operation via the Prescaler and Counter Synchronization bit group in the Control A register (CTRLA.PRESYNC).
5. Select one-shot operation by writing a '1' to the One-Shot bit in the Control B Set register (CTRLBSET.ONESHOT).
6. If desired, configure the counting direction 'down' (starting from the TOP value) by writing a '1' to the Counter Direction bit in the Control B register (CTRLBSET.DIR).
7. For capture operation, enable the individual channels to capture in the Capture Channel x Enable bit group in the Control C register (CTRLC.CPTEN).
8. If desired, enable inversion of the waveform output or IO pin input signal for individual channels via the Waveform Output Invert Enable bit group in the Control C register (CTRLC.INVEN).

30.6.2.2 Enabling, Disabling and Resetting

The TC is enabled by writing a '1' to the Enable bit in the Control A register (CTRLA.ENABLE). The TC is disbled by writing a zero to CTRLA.ENABLE.

The TC is reset by writing a one to the Software Reset bit in the Control A register (CTRLA.SWRST). All registers in the TC, except DBGCTRL, will be reset to their initial state, and the TC will be disabled. Refer to the CTRLA register for details.

The TC should be disabled before the TC is reset in order to avoid undefined behavior.

30.6.2.3 Prescaler Selection

The GCLK_TCx is fed into the internal prescaler.

The prescaler consists of a counter that counts up to the selected prescaler value, whereupon the output of the prescaler toggles.

If the prescaler value is higher than one, the counter update condition can be optionally executed on the next GCLK_TCx clock pulse or the next prescaled clock pulse. For further details, refer to Prescaler (CTRLA.PRESCALER) and Counter Synchronization (CTRLA.PRESYNC) description.

Prescaler outputs from 1 to 1/1024 are available. For a complete list of available prescaler outputs, see the register description for the Prescaler bit group in the Control A register (CTRLA.PRESCALER).

Downloaded from Arrow.com.

Note: When counting events, the prescaler is bypassed.

The joint stream of prescaler ticks and event action ticks is called CLK_TC_CNT.

Figure 30-2. Prescaler

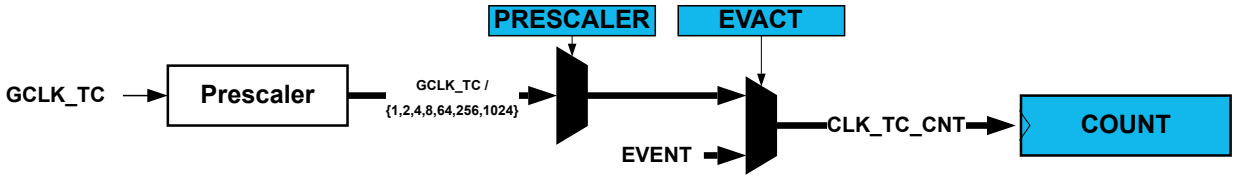

30.6.2.4 Counter Mode

The Counter mode is selected by the Mode bit group in the Control A register (CTRLA.MODE). By default, the counter is enabled in the 16-bit counter resolution. Three counter resolutions are available:

- COUNT8: The 8-bit TC has its own Period register (PER). This register is used to store the period value that can be used as the top value for waveform generation.
- COUNT16: 16-bit is the default Counter mode. There is no dedicated Period register in this mode.
- COUNT32: This mode is achieved by pairing two 16-bit TC peripherals. TC4 is paired with TC5, and TC6 is paired with TC7. TC3 does not support 32-bit resolution.

When paired, the TC peripherals are configured using the registers of the even-numbered TC (TC4 or TC6 respectively). The odd-numbered partner (TC5 or TC7 respectively) will act as client, and the Client bit in the Status register (STATUS.SLAVE) will be set. The register values of a client will not reflect the registers of the 32-bit counter. Writing to any of the Client registers will not affect the 32-bit counter. Normal access to the client COUNT and CCx registers is not allowed.

30.6.2.5 Counter Operations

The counter can be set to count up or down. When the counter is counting up and the top value is reached, the counter will wrap around to zero on the next clock cycle. When counting down, the counter will wrap around to the top value when zero is reached. In one-shot mode, the counter will stop counting after a wraparound occurs.

The counting direction is set by the Direction bit in the Control B register (CTRLB.DIR). If this bit is zero the counter is counting up, and counting down if CTRLB.DIR=1. The counter will count up or down for each tick (clock or event) until it reaches TOP or ZERO. When it is counting up and TOP is reached, the counter will be set to zero at the next tick (overflow) and the Overflow Interrupt Flag in the Interrupt Flag Status and Clear register (INTFLAG.OVF) will be set. It is also possible to generate an event on overflow or underflow when the Overflow/Underflow Event Output Enable bit in the Event Control register (EVCTRL.OVFEO) is one.

It is possible to change the counter value (by writing directly in the COUNT register) even when the counter is running. When starting the TC, the COUNT value will be either ZERO or TOP (depending on the counting direction set by CTRLBSET.DIR or CTRLBCLR.DIR), unless a different value has been written to it, or the TC has been stopped at a value other than ZERO. The write access has higher priority than count, clear, or reload. The direction of the counter can also be changed during normal operation. See also the figure below.

Downloaded from Arrow.com.

Figure 30-3. Counter Operation

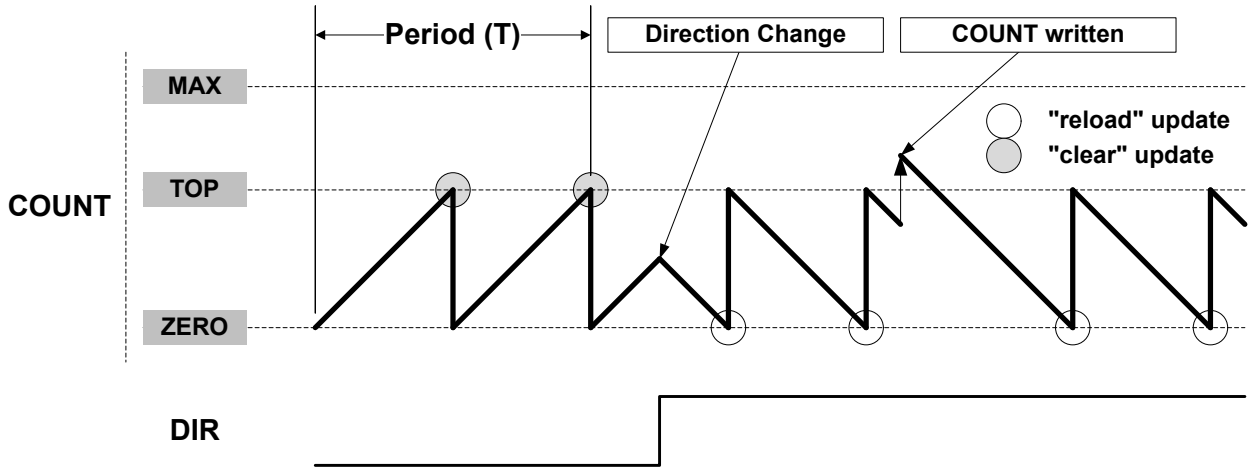

30.6.2.5.1 Stop Command and Event Action

A Stop command can be issued from software by using Command bits in the Control B Set register (CTRLBSET.CMD = 0x2, STOP). When a Stop is detected while the counter is running, the counter will retain its current value. All waveforms are cleared and the Stop bit in the Status register is set (STATUS.STOP).

30.6.2.5.2 Re-Trigger Command and Event Action

A re-trigger command can be issued from software by writing the Command bits in the Control B Set register (CTRLBSET.CMD = 0x1, RETRIGGER), or from event when a re-trigger event action is configured in the Event Control register (EVCTRL.EVACT = 0x1, RETRIGGER).

When the command is detected during counting operation, the counter will be reloaded or cleared, depending on the counting direction (CTRLBSET.DIR or CTRLBCLR.DIR). When the re-trigger command is detected while the counter is stopped, the counter will resume counting from the current value in the COUNT register.

Note: When a re-trigger event action is configured in the Event Action bits in the Event Control register (EVCTRL.EVACT=0x1, RETRIGGER), enabling the counter will not start the counter. The counter will start on the next incoming event and restart on corresponding following event.

30.6.2.5.3 Count Event Action

The TC can count events. When an event is received, the counter increases or decreases the value, depending on direction settings (CTRLBSET.DIR or CTRLBCLR.DIR). The count event action can be selected by the Event Action bit group in the Event Control register (EVCTRL.EVACT=0x2, COUNT).

30.6.2.5.4 Start Event Action

The TC can start counting operation on an event when previously stopped. In this configuration, the event has no effect if the counter is already counting. When the peripheral is enabled, the counter operation starts when the event is received or when a re-trigger software command is applied.

The Start TC on Event action can be selected by the Event Action bit group in the Event Control register (EVCTRL.EVACT=0x3, START).

30.6.2.6 Compare Operations

By default, the Compare/Capture channel is configured for compare operations.

When using the TC and the Compare/Capture Value registers (CCx) for compare operations, the counter value is continuously compared to the values in the CCx registers. This can be used for timer or for waveform operation.

30.6.2.6.1 Waveform Output Operations

The compare channels can be used for waveform generation on output port pins. To make the waveform available on the connected pin, the following requirements must be fulfilled:

1. Choose a waveform generation mode in the Waveform Generation Operation bit in Waveform register (CTRLA.WAVEGEN).
2. Optionally invert the waveform output by writing the corresponding Waveform Output Invert Enable bit in the Control C register (CTRLC.INVx).

Downloaded from Arrow.com.

3. Configure the pins with the I/O Pin Controller. Refer to *PORT - I/O Pin Controller* for details.

The counter value is continuously compared with each CCx value. On a comparison match, the Match or Capture Channel x bit in the Interrupt Flag Status and Clear register (INTFLAG.MCx) will be set on the next zero-to-one transition of CLK_TC_CNT (see the next figure). An interrupt/and or event can be generated on comparison match when INTENSET.MCx=1 and/or EVCTRL.MCEOx=1.

There are four waveform configurations for the Waveform Generation Operation bit group in the Control A register (CTRLA.WAVEGEN) . This will influence how the waveform is generated and impose restrictions on the top value. The configurations are:

- Normal frequency (NFRQ)
- Match frequency (MFRQ)
- Normal pulse-width modulation (NPWM)
- Match pulse-width modulation (MPWM)

When using NPWM or NFRQ configuration, the TOP will be determined by the counter resolution. In 8-bit counter mode, the Period register (PER) is used as TOP, and the TOP can be changed by writing to the PER register. In 16- and 32-bit counter mode, TOP is fixed to the maximum (MAX) value of the counter.

Related Links

23. PORT - I/O Pin Controller

30.6.2.6.2 Frequency Operation

Normal Frequency Generation (NFRQ)

For Normal Frequency Generation, the period time (T) is controlled by the period register (PER) for 8-bit counter mode and MAX for 16- and 32-bit mode. The waveform generation output (WO[x]) is toggled on each compare match between COUNT and CCx, and the corresponding Match or Capture Channel x Interrupt Flag (INTFLAG.MCx) will be set.

Figure 30-4. Normal Frequency Operation

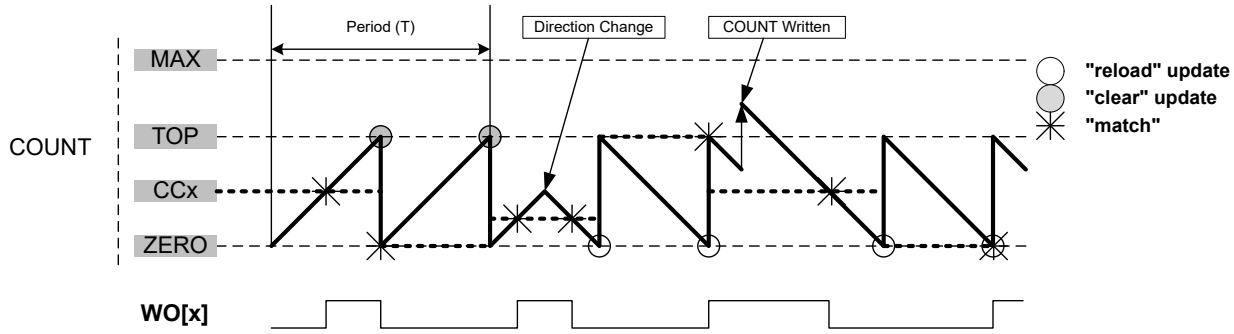

Match Frequency Generation (MFRQ)

For Match Frequency Generation, the period time (T) is controlled by the CC0 register instead of PER or MAX. WO[0] toggles on each update condition.

Downloaded from Arrow.com.

Figure 30-5. Match Frequency Operation

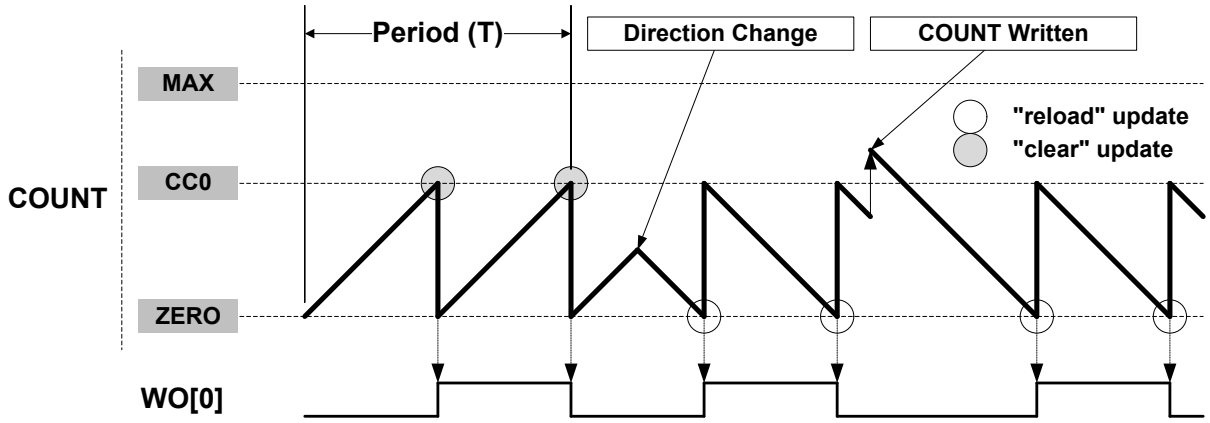

30.6.2.6.3 PWM Operation

Normal Pulse-Width Modulation Operation (NPWM)

NPWM uses single-slope PWM generation.

For single-slope PWM generation, the period time (T) is controlled by the TOP value, and CCx controls the duty cycle of the generated waveform output. When up-counting, the WO[x] is set at start or compare match between the COUNT and TOP values, and cleared on compare match between COUNT and CCx register values. When down-counting, the WO[x] is cleared at start or compare match between the COUNT and ZERO values, and set on compare match between COUNT and CCx register values.

The following equation calculates the exact resolution for a single-slope PWM (R_{PWM_SS}) waveform:

$$R_{PWM_SS} = \frac{\log(TOP+1)}{\log(2)}$$

The PWM frequency (f_{PWM_SS}) depends on TOP value and the peripheral clock frequency (f_{GCLK_TC}), and can be calculated by the following equation:

$$f_{PWM_SS} = \frac{f_{GCLK_TC}}{N(TOP+1)}$$

Where N represents the prescaler divider used (1, 2, 4, 8, 16, 64, 256, 1024).

Match Pulse-Width Modulation Operation (MPWM)

In MPWM, the output of WO[1] is depending on CC1 as shown in the figure below. On every overflow/underflow, a one-TC-clock-cycle negative pulse is put out on WO[0] (not shown in the figure).

Figure 30-6. Match PWM Operation

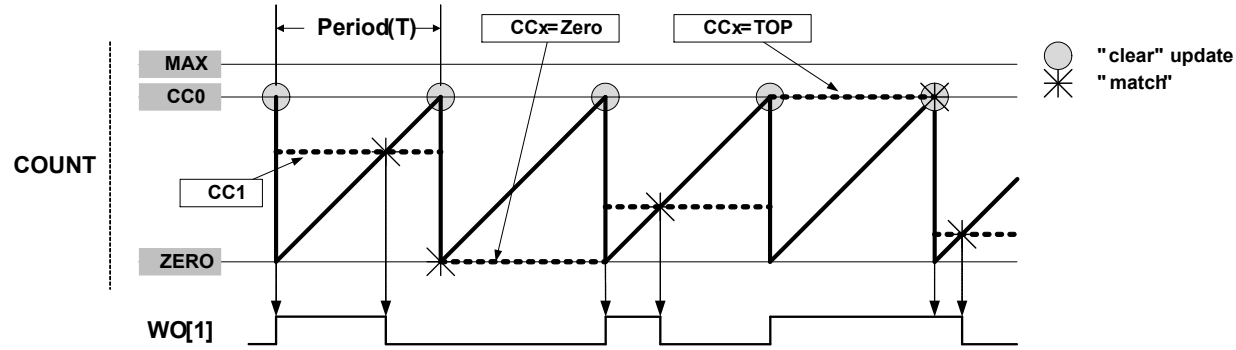

The table below shows the update counter and overflow event/interrupt generation conditions in different operation modes.

Downloaded from Arrow.com.

Table 30-2. Counter Update and Overflow Event/interrupt Conditions in TC

Name	Operation	TOP	Update	Output Waveform		OVFIF/Event	
				On Match	On Update	Up	Down
NFRQ	Normal Frequency	PER	TOP/ ZERO	Toggle	Stable	TOP	ZERO
MFRQ	Match Frequency	CC0	TOP/ ZERO	Toggle	Stable	TOP	ZERO
NPWM	Single-slope PWM	PER	TOP/ ZERO	See description above.		TOP	ZERO
MPWM	Single-slope PWM	CC0	TOP/ ZERO	Toggle	Toggle	TOP	ZERO

30.6.2.6.4 Changing the Top Value

The counter period is changed by writing a new TOP value to the Period register (PER or CC0, depending on the waveform generation mode). If a new TOP value is written when the counter value is close to zero and counting down, the counter can be reloaded with the previous TOP value, due to synchronization delays. Then, the counter will count one extra cycle before the new TOP value is used.

COUNT and TOP are continuously compared, so when a new TOP value that is lower than current COUNT is written to TOP, COUNT will wrap before a compare match.

A counter wraparound can occur in any operation mode when up-counting without buffering, see the figure below.

Figure 30-7. Changing the Top value with Up-Counting Operation

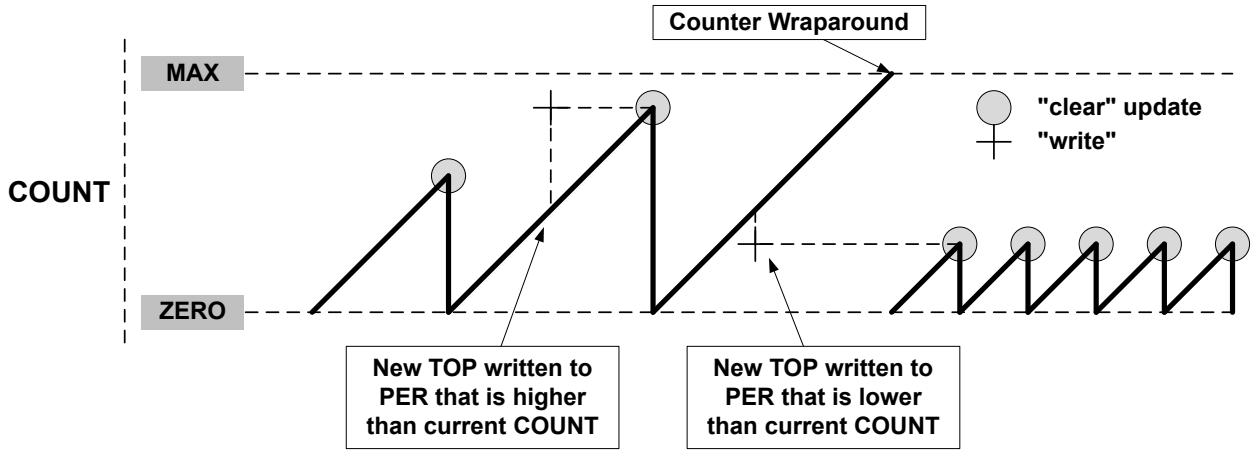

Figure 30-8. Changing the Top Value with Down-Counting Operation

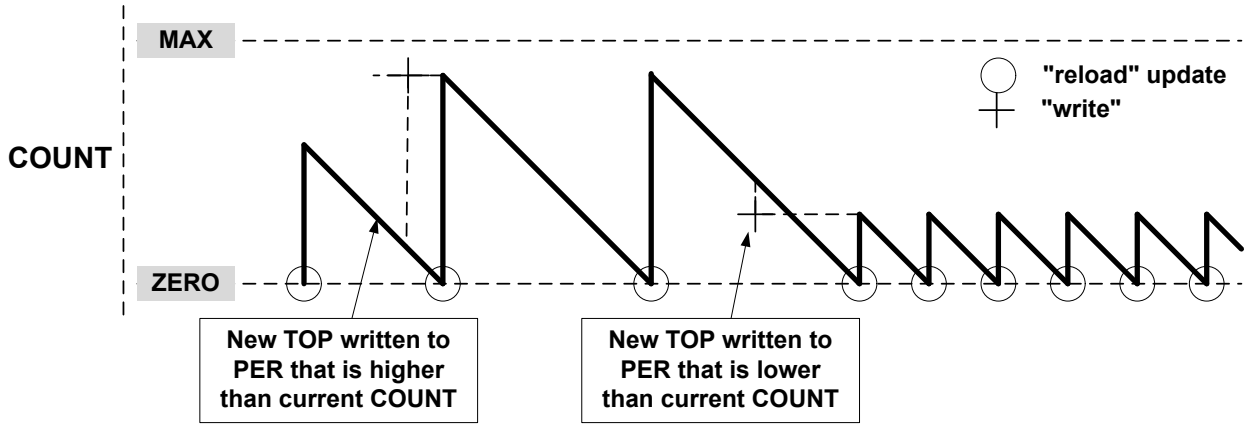

Downloaded from Arrow.com.

30.6.2.7 Capture Operations

To enable and use capture operations, the event line into the TC must be enabled using the TC Event Input bit in the Event Control register (EVCTRL.TCEI). The capture channels to be used must also be enabled in the Capture Channel x Enable bit group in the Control C register (CTRLC.CPTENx) before capture can be performed.

To enable and use capture operations, the corresponding Capture Channel x Enable bit in the Control C register (CTRLC.CAPTENx) must be written to '1'.

Note: The RETRIGGER, COUNT and START event actions are available only on an event from the Event System.

30.6.2.7.1 Event Capture Action

The compare/capture channels can be used as input capture channels to capture events from the Event System and give them a timestamp. The following figure shows four capture events for one capture channel.

Figure 30-9. Input Capture Timing

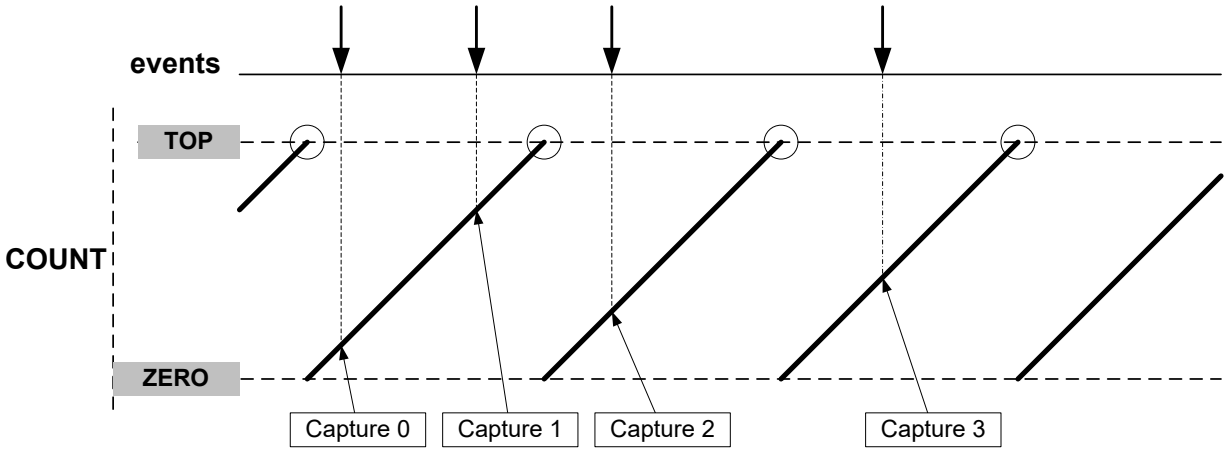

The TC can detect capture overflow of the input capture channels: When a new capture event is detected while the Capture Interrupt flag (INTFLAG.MCx) is still set, the new timestamp will not be stored and INTFLAG.ERR will be set.

30.6.2.7.2 Period and Pulse-Width (PPW) Capture Action

The TC can perform two input captures and restart the counter on one of the edges. This enables the TC to measure the pulse width and period and to characterize the frequency *f* and duty cycle of an input signal:

$$f = \frac{1}{T} \qquad \text{dutyCycle} = \frac{t_p}{T}$$

Selecting PWP (pulse-width, period) in the Event Action bit group in the Event Control register (EVCTRL.EVACT) enables the TC to perform one capture action on the rising edge and the other one on the falling edge. The period *T* will be captured into CC1 and the pulse width t_p in CC0. EVCTRL.EVACT=PPW (period and pulse-width)offers identical functionality, but will capture *T* into CC0 and t_p into CC1.

The TC Event Input Invert Enable bit in the Event Control register (EVCTRL.TCINV) is used to select whether the wraparound should occur on the rising edge or the falling edge. If EVCTRL.TCINV=1, the wraparound will happen on the falling edge.

To fully characterize the frequency and duty cycle of the input signal, activate capture on CC0 and CC1 by writing 0x3 to the Capture Channel x Enable bit group in the Control C register (CTRLC.CPTEN). When only one of these measurements is required, the second channel can be used for other purposes.

The TC can detect capture overflow of the input capture channels: When a new capture event is detected while the Capture Interrupt flag (INTFLAG.MCx) is still set, the new timestamp will not be stored and INTFLAG.ERR will be set.

Downloaded from Arrow.com.

Figure 30-10. PWP Capture

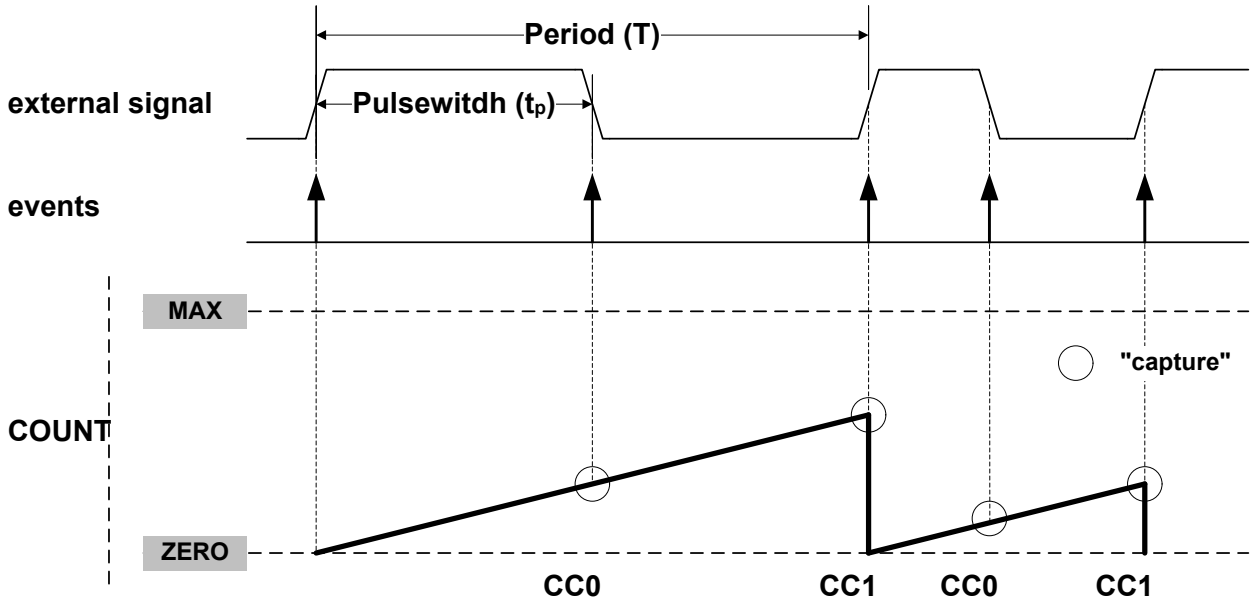

30.6.3 Additional Features

30.6.3.1 One-Shot Operation

When one-shot is enabled, the counter automatically stops on the next counter overflow or underflow condition. When the counter is stopped, the Stop bit in the Status register (STATUS.STOP) is automatically set and the waveform outputs are set to zero.

One-shot operation is enabled by writing a '1' to the One-Shot bit in the Control B Set register (CTRLBSET.ONESHOT), and disabled by writing a '1' to CTRLBCLR.ONESHOT. When enabled, the TC will count until an overflow or underflow occurs and stops counting operation. The one-shot operation can be restarted by a re-trigger software command, a re-trigger event, or a start event. When the counter restarts its operation, STATUS.STOP is automatically cleared.

30.6.4 DMA, Interrupts and Events

Table 30-3. Module Request for TC

Condition	Interrupt request	Event output	Event input	DMA request	DMA request is cleared
Overflow / Underflow	YES	YES		YES	Cleared on next clock cycle
Channel Compare Match or Capture	YES	YES		YES[1]	For compare channel – Cleared on next clock cycle. For capture channel – cleared when CCx register is read
Capture Overflow Error	YES				
Synchronization Ready	YES				

Downloaded from Arrow.com.

.....continued					
Condition	**Interrupt request**	**Event output**	**Event input**	**DMA request**	**DMA request is cleared**
Start Counter			YES		
Retrigger Counter			YES		
Increment / Decrement counter			YES		
Simple Capture			YES		
Period Capture			YES		
Pulse Width Capture			YES		

Note: 1. Two DMA requests lines are available, one for each compare/capture channel.

30.6.4.1 DMA Operation

The TC can generate the following DMA requests:

- Overflow (OVF): the request is set when an update condition (overflow, underflow) is detected. The request is cleared on next clock cycle.
- Channel Match or Capture (MCx): for a compare channel, the request is set on each compare match detection and cleared on next clock cycle. For a capture channel, the request is set when valid data is present in CCx register, and cleared when CCx register is read.

When using the TC with the DMA OVF request, the new value will be transferred to the register after the update condition. This means that the value is updated after the DMA and synchronization delay, and if the COUNT value has reached the new value before PER or CCx is updated, a match will not happen.

When using the TC with the DMA MCx request and updating CCx with a value that is lower than the current COUNT when down-counting, or higher than the current COUNT when up-counting, this value could cause a new compare match before the counter overflows. This will trigger the next DMA transfer, update CCx again, and the previous value is disregarded from the output signal WO[x].

30.6.4.2 Interrupts

The TC has the following interrupt sources:

- Overflow/Underflow (OVF)
- Match or Capture Channel x (MCx)
- Capture Overflow Error (ERR)
- Synchronization Ready (SYNCRDY)

Each interrupt source has an interrupt flag associated with it. The interrupt flag in the Interrupt Flag Status and Clear register (INTFLAG) is set when the interrupt condition occurs.

Each interrupt can be individually enabled by writing a '1' to the corresponding bit in the Interrupt Enable Set register (INTENSET), and disabled by writing a '1' to the corresponding bit in the Interrupt Enable Clear register (INTENCLR).

An interrupt request is generated when the interrupt flag is set and the corresponding interrupt is enabled. The interrupt request remains active until either the interrupt flag is cleared, the interrupt is disabled, or the TC is reset. on how to clear interrupt flags.

The TC has one common interrupt request line for all the interrupt sources. The user must read the INTFLAG register to determine which interrupt condition is present.

Note that interrupts must be globally enabled for interrupt requests to be generated. Refer to *Nested Vector Interrupt Controller* for details.

Related Links

11.2 Nested Vector Interrupt Controller

Downloaded from Arrow.com.

30.6.4.3 Events

The TC can generate the following output events:

- Overflow/Underflow (OVF)
- Match or Capture (MC)

Writing a '1' to an Event Output bit in the Event Control register (EVCTRL.MCEOx) enables the corresponding output event. The output event is disabled by writing EVCTRL.MCEOx=0.

One of the following event actions can be selected by the Event Action bit group in the Event Control register (EVCTRL.EVACT):

- Start TC (START)
- Re-trigger TC (RETRIGGER)
- Increment or decrement counter (depends on counter direction)
- Count on event (COUNT)
- Capture Period (PPW and PWP)

Writing a '1' to the TC Event Input bit in the Event Control register (EVCTRL.TCEI) enables input events to the TC. Writing a '0' to this bit disables input events to the TC. The TC requires only asynchronous event inputs. For further details on how configuring the asynchronous events, refer to *EVSYS - Event System*.

Related Links

24. EVSYS – Event System

30.6.5 Sleep Mode Operation

The TC can be configured to operate in any sleep mode. To be able to run in standby, the RUNSTDBY bit in the Control A register (CTRLA.RUNSTDBY) must be written to one. The TC can wake up the device using interrupts from any sleep mode or perform actions through the Event System.

30.6.6 Synchronization

Due to asynchronicity between the main clock domain and the peripheral clock domains, some registers need to be synchronized when written or read.

The following bits are synchronized when written:

- Software Reset bit in the Control A register (CTRLA.SWRST)
- Enable bit in the Control A register (CTRLA.ENABLE)

Required write-synchronization is denoted by the "Write-Synchronized" property in the register description.

The following registers are synchronized when written:

- Control B Clear register (CTRLBCLR)
- Control B Set register (CTRLBSET)
- Control C register (CTRLC)
- Count Value register (COUNT)
- Period Value register (PER)
- Compare/Capture Value registers (CCx)

Required write-synchronization is denoted by the "Write-Synchronized" property in the register description.

The following registers are synchronized when read:

- Control B Clear register (CTRLBCLR)
- Control B Set register (CTRLBSET)
- Control C register (CTRLC)
- Count Value register (COUNT)
- Period Value register (PER)
- Compare/Capture Value registers (CCx)

Required read-synchronization is denoted by the "Read-Synchronized" property in the register description.

Downloaded from Arrow.com.

Related Links

14.3 Register Synchronization

Downloaded from Arrow.com.

30.7 Register Summary for 8-bit Registers

Offset	Name	Bit Pos.	7	6	5	4	3	2	1	0
0x00	CTRLA	7:0		WAVEGEN[1:0]			MODE[1:0]		ENABLE	SWRST
		15:8			PRESCSYNC[1:0]		RUNSTDBY	PRESCALER[2:0]		
0x02	READREQ	7:0				ADDR[4:0]				
		15:8	RREQ	RCONT						
0x04	CTRLBCLR	7:0	CMD[1:0]					ONESHOT		DIR
0x05	CTRLBSET	7:0	CMD[1:0]					ONESHOT		DIR
0x06	CTRLC	7:0			CPTEN1	CPTEN0			INVEN1	INVEN0
0x07	Reserved									
0x08	DBGCTRL	7:0								DBGRUN
0x09	Reserved									
0x0A	EVCTRL	7:0			TCEI	TCINV		EVACT[2:0]		
		15:8			MCEO1	MCEO0				OVFEO
0x0C	INTENCLR	7:0			MC1	MC0	SYNCRDY		ERR	OVF
0x0D	INTENSET	7:0			MC1	MC0	SYNCRDY		ERR	OVF
0x0E	INTFLAG	7:0			MC1	MC0	SYNCRDY		ERR	OVF
0x0F	STATUS	7:0	SYNCBUSY				STOP			
0x10	COUNT	7:0	COUNT[7:0]							
0x11 ... 0x13	Reserved									
0x14	PER	7:0	PER[7:0]							
0x15 ... 0x17	Reserved									
0x18	CC0	7:0	CC[7:0]							
0x19	CC1	7:0	CC[7:0]							

30.8 Register Description for 8-bit Registers

Registers can be 8, 16, or 32 bits wide. Atomic 8-, 16- and 32-bit accesses are supported. In addition, the 8-bit quarters and 16-bit halves of a 32-bit register, and the 8-bit halves of a 16-bit register can be accessed directly.

Some registers are optionally write-protected by the Peripheral Access Controller (PAC). Optional PAC write-protection is denoted by the "PAC Write-Protection" property in each individual register description. For details, refer to 30.5.8 Register Access Protection

Some registers are synchronized when read and/or written. Synchronization is denoted by the "Write-Synchronized" or the "Read-Synchronized" property in each individual register description. For details, refer to 30.6.6 Synchronization.

Some registers are enable-protected, meaning they can only be written when the peripheral is disabled. Enable-protection is denoted by the "Enable-Protected" property in each individual register description.

Downloaded from Arrow.com.

30.8.1 Control A

Name: CTRLA
Offset: 0x00
Reset: 0x00000000
Property: PAC Write-Protection, Write-Synchronized, Enable-Protected

Bit	15	14	13	12	11	10	9	8
			PRESCSYNC[1:0]		RUNSTDBY	PRESCALER[2:0]		
Access			R/W	R/W	R/W	R/W	R/W	R/W
Reset			0	0	0	0	0	0

Bit	7	6	5	4	3	2	1	0
		WAVEGEN[1:0]			MODE[1:0]		ENABLE	SWRST
Access		R/W	R/W		R/W	R/W	R/W	R/W
Reset		0	0		0	0	0	0

Bits 13:12 – PRESCSYNC[1:0] Prescaler and Counter Synchronization
These bits select whether the counter should wrap around on the next GCLK_TCx clock or the next prescaled GCLK_TCx clock. It also makes it possible to reset the prescaler.
These bits are not synchronized.

Value	Name	Description
0x0	GCLK	Reload or reset the counter on next generic clock
0x1	PRESC	Reload or reset the counter on next prescaler clock
0x2	RESYNC	Reload or reset the counter on next generic clock. Reset the prescaler counter
0x3	-	Reserved

Bit 11 – RUNSTDBY Run in Standby
This bit is used to keep the TC running in Standby mode.
This bit is not synchronized.

Value	Description
0	The TC is halted in standby.
1	The TC continues to run in standby.

Bits 10:8 – PRESCALER[2:0] Prescaler
These bits select the counter prescaler factor.
These bits are not synchronized.

Value	Name	Description
0x0	DIV1	Prescaler: GCLK_TC
0x1	DIV2	Prescaler: GCLK_TC/2
0x2	DIV4	Prescaler: GCLK_TC/4
0x3	DIV8	Prescaler: GCLK_TC/8
0x4	DIV16	Prescaler: GCLK_TC/16
0x5	DIV64	Prescaler: GCLK_TC/64
0x6	DIV256	Prescaler: GCLK_TC/256
0x7	DIV1024	Prescaler: GCLK_TC/1024

Bits 6:5 – WAVEGEN[1:0] Waveform Generation Operation
These bits select the waveform generation operation. They affect the top value, as shown in “Waveform Output Operations”. It also controls whether frequency or PWM waveform generation should be used. How these modes differ can also be seen from “Waveform Output Operations”.
These bits are not synchronized.

Downloaded from Arrow.com.

Table 30-4. Waveform Generation Operation

Value	Name	Operation	Top Value	Waveform Output on Match	Waveform Output on Wraparound
0x0	NFRQ	Normal frequency	PER(1)/Max	Toggle	No action
0x1	MFRQ	Match frequency	CC0	Toggle	No action
0x2	NPWM	Normal PWM	PER(1)/Max	Clear when counting up Set when counting down	Set when counting up Clear when counting down
0x3	MPWM	Match PWM	CC0	Clear when counting up Set when counting down	Set when counting up Clear when counting down

Note:

1. This depends on the TC mode. In 8-bit mode, the top value is the Period Value register (PER). In 16- and 32-bit mode it is the maximum value.

Bits 3:2 – MODE[1:0] Timer Counter Mode
These bits select the Counter mode.
These bits are not synchronized.

Value	Name	Description
0x0	COUNT16	Counter in 16-bit mode
0x1	COUNT8	Counter in 8-bit mode
0x2	COUNT32	Counter in 32-bit mode
0x3	-	Reserved

Bit 1 – ENABLE Enable
Due to synchronization, there is delay from writing CTRLA.ENABLE until the peripheral is enabled/disabled. The value written to CTRLA.ENABLE will read back immediately, and the ENABLE Synchronization Busy bit in the SYNCBUSY register (SYNCBUSY.ENABLE) will be set. SYNCBUSY.ENABLE will be cleared when the operation is complete.
This bit is not enable protected.

Value	Description
0	The peripheral is disabled.
1	The peripheral is enabled.

Bit 0 – SWRST Software Reset
Writing a '0' to this bit has no effect.
Writing a '1' to this bit resets all registers in the TC, except DBGCTRL, to their initial state, and the TC will be disabled.
Writing a '1' to CTRLA.SWRST will always take precedence; all other writes in the same write-operation will be discarded.
Due to synchronization there is a delay from writing CTRLA.SWRST until the reset is complete. CTRLA.SWRST and SYNCBUSY.SWRST will both be cleared when the reset is complete.
This bit is not enable protected.

Value	Description
0	There is no reset operation ongoing.
1	The reset operation is ongoing.

Downloaded from Arrow.com.

30.8.2 Read Request

Name: READREQ
Offset: 0x02
Reset: 0x0000

Bit	15	14	13	12	11	10	9	8
	RREQ	RCONT						
Access	W	R/W						
Reset	0	0						

Bit	7	6	5	4	3	2	1	0
				ADDR[4:0]				
Access				R/W	R/W	R/W	R/W	R/W
Reset				0	0	0	0	0

Bit 15 – RREQ Read Request
Writing a zero to this bit has no effect.
This bit will always read as zero.
Writing a one to this bit requests synchronization of the register pointed to by the Address bit group (READREQ.ADDR) and sets the Synchronization Busy bit in the Status register (STATUS.SYNCBUSY).

Bit 14 – RCONT Read Continuously
When continuous synchronization is enabled, the register pointed to by the Address bit group (READREQ.ADDR) will be synchronized automatically every time the register is updated.
READREQ.RCONT prevents READREQ.RREQ from clearing automatically. For the continuous read mode, RREQ bit is required to be set once the RCONT bit is set.
Note: Once the continuous synchronization is enabled, the first write in the COUNT/CLOCK register will be stalled for a maximum of 6 APB + 6 TC clock cycles (the time for the on-going read synchronization to complete).

Value	Description
0	Continuous synchronization is disabled.
1	Continuous synchronization is enabled.

Bits 4:0 – ADDR[4:0] Address
These bits select the offset of the register that needs read synchronization. In the TC, only COUNT and CCx are available for read synchronization.

Downloaded from Arrow.com.

30.8.3 Control B Clear

Name: CTRLBCLR
Offset: 0x04
Reset: 0x00
Property: PAC Write-Protection, Read-Synchronized, Write-Synchronized

This register allows the user to clear bits in the CTRLB register without doing a read-modify-write operation. Changes in this register will also be reflected in the Control B Set register (CTRLBSET).

Bit	7	6	5	4	3	2	1	0
	CMD[1:0]					ONESHOT		DIR
Access	R/W	R/W				R/W		R/W
Reset	0	0				0		0

Bits 7:6 – CMD[1:0] Command
These bits are used for software control of the TC. The commands are executed on the next prescaled GCLK_TC clock cycle. When a command has been executed, the CMD bit group will be read back as zero.
Writing 0x0 to these bits has no effect.
Writing a '1' to any of these bits will clear the pending command.

Table 30-5. Command

Value	Name	Description
0x0	NONE	No action
0x1	RETRIGGER	Force a start, restart or retrigger
0x2	STOP	Force a stop
0x3	-	Reserved

Bit 2 – ONESHOT One-Shot on Counter
This bit controls one-shot operation of the TC.
Writing a '0' to this bit has no effect
Writing a '1' to this bit will disable one-shot operation.

Value	Description
0	The TC will wrap around and continue counting on an Overflow/Underflow condition.
1	The TC will wrap around and stop on the next Underflow/Overflow condition.

Bit 0 – DIR Counter Direction
This bit is used to change the direction of the counter.
Writing a '0' to this bit has no effect.
Writing a '1' to this bit will clear the bit and make the counter count up.

Value	Description
0	The timer/counter is counting up (incrementing).
1	The timer/counter is counting down (decrementing).

Downloaded from Arrow.com.

30.8.4 Control B Set

Name: CTRLBSET
Offset: 0x05
Reset: 0x00
Property: PAC Write-Protection, Read-synchronized, Write-Synchronized

This register allows the user to set bits in the CTRLB register without doing a read-modify-write operation. Changes in this register will also be reflected in the Control B Clear register (CTRLBCLR).

Bit	7	6	5	4	3	2	1	0
	CMD[1:0]					ONESHOT		DIR
Access	R/W	R/W				R/W		R/W
Reset	0	0				0		0

Bits 7:6 – CMD[1:0] Command
These bits are used for software control of the TC. The commands are executed on the next prescaled GCLK_TC clock cycle. When a command has been executed, the CMD bit group will be read back as zero.
Writing 0x0 to these bits has no effect.
Writing a '1' to one of these bits will set a command.

Table 30-6. Command

Value	Name	Description
0x0	NONE	No action
0x1	RETRIGGER	Force a start, restart or retrigger
0x2	STOP	Force a stop
0x3	-	Reserved

Bit 2 – ONESHOT One-Shot on Counter
This bit controls one-shot operation of the TC.
Writing a '0' to this bit has no effect
Writing a '1' to this bit will enable one-shot operation.

Value	Description
0	The TC will wrap around and continue counting on an Overflow/Underflow condition.
1	The TC will wrap around and stop on the next Underflow/Overflow condition.

Bit 0 – DIR Counter Direction
This bit is used to change the direction of the counter.
Writing a '0' to this bit has no effect.
Writing a '1' to this bit will make the counter count down.

Value	Description
0	The timer/counter is counting up (incrementing).
1	The timer/counter is counting down (decrementing).

Downloaded from Arrow.com.

30.8.5 Control C

Name: CTRLC
Offset: 0x06
Reset: 0x00
Property: PAC Write-Protection, Read-synchronized, Write-Synchronized

Bit	7	6	5	4	3	2	1	0
			CPTEN1	CPTEN0			INVEN1	INVEN0
Access			R/W	R/W			R/W	R/W
Reset			0	0			0	0

Bits 4, 5 – CPTENx Capture Channel x Enable
These bits are used to select the capture or compare operation on channel x.
Writing a '1' to CPTENx enables capture on channel x.
Writing a '0' to CPTENx disables capture on channel x.

Bits 0, 1 – INVENx Waveform Output x Inversion Enable
These bits are used to select inversion on the output of channel x.
Writing a '1' to INVENx inverts output from WO[x].
Writing a '0' to INVENx disables inversion of output from WO[x].

Downloaded from Arrow.com.

30.8.6 Debug Control

Name: DBGCTRL
Offset: 0x08
Reset: 0x00
Property: PAC Write-Protection

Bit	7	6	5	4	3	2	1	0
								DBGRUN
Access								R/W
Reset								0

Bit 0 – DBGRUN Debug Run Mode
This bit is not affected by a software Reset, and should not be changed by software while the TC is enabled.

Value	Description
0	The TC is halted when the device is halted in Debug mode.
1	The TC continues normal operation when the device is halted in Debug mode.

Downloaded from Arrow.com.

30.8.7 Event Control

Name: EVCTRL
Offset: 0x0A
Reset: 0x0000
Property: PAC Write-Protection, Enable-Protected

Bit	15	14	13	12	11	10	9	8
			MCEO1	MCEO0				OVFEO
Access			R/W	R/W				R/W
Reset			0	0				0

Bit	7	6	5	4	3	2	1	0
			TCEI	TCINV		EVACT[2:0]		
Access			R/W	R/W		R/W	R/W	R/W
Reset			0	0		0	0	0

Bits 12, 13 – MCEOx Match or Capture Channel x Event Output Enable [x = 1..0]
These bits enable the generation of an event for every match or capture on channel x.

Value	Description
0	Match/Capture event on channel x is disabled and will not be generated.
1	Match/Capture event on channel x is enabled and will be generated for every compare/capture.

Bit 8 – OVFEO Overflow/Underflow Event Output Enable
This bit enables the Overflow/Underflow event. When enabled, an event will be generated when the counter overflows/underflows.

Value	Description
0	Overflow/Underflow event is disabled and will not be generated.
1	Overflow/Underflow event is enabled and will be generated for every counter overflow/underflow.

Bit 5 – TCEI TC Event Enable
This bit is used to enable asynchronous input events to the TC.

Value	Description
0	Incoming events are disabled.
1	Incoming events are enabled.

Bit 4 – TCINV TC Inverted Event Input Polarity
This bit inverts the asynchronous input event source.

Value	Description
0	Input event source is not inverted.
1	Input event source is inverted.

Bits 2:0 – EVACT[2:0] Event Action
These bits define the event action the TC will perform on an event.

Value	Name	Description
0x0	OFF	Event action disabled
0x1	RETRIGGER	Start, restart or retrigger TC on event
0x2	COUNT	Count on event
0x3	START	Start TC on event
0x4	-	Reserved
0x5	PPW	Period captured in CC0, pulse width in CC1
0x6	PWP	Period captured in CC1, pulse width in CC0
0x7	-	Reserved

Downloaded from Arrow.com.

30.8.8 Interrupt Enable Clear

Name: INTENCLR
Offset: 0x0C
Reset: 0x00
Property: PAC Write-Protection

This register allows the user to disable an interrupt without doing a read-modify-write operation. Changes in this register will also be reflected in the Interrupt Enable Set register (INTENSET).

Bit	7	6	5	4	3	2	1	0
			MC1	MC0	SYNCRDY		ERR	OVF
Access			R/W	R/W	R/W		R/W	R/W
Reset			0	0	0		0	0

Bits 4, 5 – MCx Match or Capture Channel x Interrupt Enable [x = 1..0]
Writing a '0' to these bits has no effect.
Writing a '1' to MCx will clear the corresponding Match or Capture Channel x Interrupt Enable bit, which disables the Match or Capture Channel x interrupt.

Value	Description
0	The Match or Capture Channel x interrupt is disabled.
1	The Match or Capture Channel x interrupt is enabled.

Bit 3 – SYNCRDY Synchronization Ready Interrupt Enable
Writing a '0' to this bit has no effect.
Writing a one to this bit will clear the Synchronization Ready Interrupt Disable/Enable bit, which disables the Synchronization Ready interrupt.

Value	Description
0	The Synchronization Ready interrupt is disabled.
1	The Synchronization Ready interrupt is enabled.

Bit 1 – ERR Error Interrupt Enable
Writing a '0' to this bit has no effect.
Writing a '1' to this bit will clear the Error Interrupt Enable bit, which disables the Error interrupt.

Value	Description
0	The Error interrupt is disabled.
1	The Error interrupt is enabled.

Bit 0 – OVF Overflow Interrupt Enable
Writing a '0' to this bit has no effect.
Writing a '1' to this bit will clear the Overflow Interrupt Enable bit, which disables the Overflow interrupt request.

Value	Description
0	The Overflow interrupt is disabled.
1	The Overflow interrupt is enabled.

Downloaded from Arrow.com.

30.8.9 Interrupt Enable Set

Name: INTENSET
Offset: 0x0D
Reset: 0x00
Property: PAC Write-Protection

This register allows the user to enable an interrupt without doing a read-modify-write operation. Changes in this register will also be reflected in the Interrupt Enable Clear register (INTENCLR).

Bit	7	6	5	4	3	2	1	0
			MC1	MC0	SYNCRDY		ERR	OVF
Access			R/W	R/W	R/W		R/W	R/W
Reset			0	0	0		0	0

Bits 4, 5 – MCx Match or Capture Channel x Interrupt Enable [x = 1..0]
Writing a '0' to these bits has no effect.
Writing a '1' to MCx will set the corresponding Match or Capture Channel x Interrupt Enable bit, which enables the Match or Capture Channel x interrupt.

Value	Description
0	The Match or Capture Channel x interrupt is disabled.
1	The Match or Capture Channel x interrupt is enabled.

Bit 3 – SYNCRDY Synchronization Ready Interrupt Enable
Writing a '0' to this bit has no effect.
Writing a one to this bit will set the Synchronization Ready Interrupt Disable/Enable bit, which enables the Synchronization Ready interrupt.

Value	Description
0	The Synchronization Ready interrupt is disabled.
1	The Synchronization Ready interrupt is enabled.

Bit 1 – ERR Error Interrupt Enable
Writing a '0' to this bit has no effect.
Writing a '1' to this bit will set the Error Interrupt Enable bit, which enables the Error interrupt.

Value	Description
0	The Error interrupt is disabled.
1	The Error interrupt is enabled.

Bit 0 – OVF Overflow Interrupt Enable
Writing a '0' to this bit has no effect.
Writing a '1' to this bit will set the Overflow Interrupt Enable bit, which enables the Overflow interrupt request.

Value	Description
0	The Overflow interrupt is disabled.
1	The Overflow interrupt is enabled.

Downloaded from Arrow.com.

30.8.10 Interrupt Flag Status and Clear

Name: INTFLAG
Offset: 0x0E
Reset: 0x00
Property: -

Bit	7	6	5	4	3	2	1	0
			MC1	MC0	SYNCRDY		ERR	OVF
Access			R/W	R/W	R/W		R/W	R/W
Reset			0	0	0		0	0

Bits 4, 5 – MCx Match or Capture Channel x [x = 1..0]
This flag is set on a comparison match, or when the corresponding CCx register contains a valid capture value. This flag is set on the next CLK_TC_CNT cycle, and will generate an interrupt request if the corresponding Match or Capture Channel x Interrupt Enable bit in the Interrupt Enable Set register (INTENSET.MCx) is '1'.
Writing a '0' to one of these bits has no effect.
Writing a '1' to one of these bits will clear the corresponding Match or Capture Channel x Interrupt flag
In capture operation, this flag is automatically cleared when CCx register is read.

Bit 3 – SYNCRDY Synchronization Ready Interrupt Enable
Writing a '0' to this bit has no effect.
Writing a one to this bit will clear the Synchronization Ready Interrupt Disable/Enable bit, which disables the Synchronization Ready interrupt.

Value	Description
0	The Synchronization Ready interrupt is disabled.
1	The Synchronization Ready interrupt is enabled.

Bit 1 – ERR Error Interrupt Flag
This flag is set when a new capture occurs on a channel while the corresponding Match or Capture Channel x Interrupt flag is set, in which case there is nowhere to store the new capture.
Writing a '0' to this bit has no effect.
Writing a '1' to this bit clears the Error Interrupt flag.

Bit 0 – OVF Overflow Interrupt Flag
This flag is set on the next CLK_TC_CNT cycle after an Overflow condition occurs, and will generate an interrupt request if INTENCLR.OVF or INTENSET.OVF is '1'.
Writing a '0' to this bit has no effect.
Writing a '1' to this bit clears the Overflow Interrupt flag.

Downloaded from Arrow.com.

30.8.11 Status

Name: STATUS
Offset: 0x0F
Reset: 0x08
Property: -

Bit	7	6	5	4	3	2	1	0
	SYNCBUSY				STOP			
Access	R				R			
Reset	0				1			

Bit 7 – SYNCBUSY Synchronization Busy
This bit is cleared when the synchronization of registers between the clock domains is complete.
This bit is set when the synchronization of registers between clock domains is started.

Bit 3 – STOP Stop Status Flag
This bit is set when the TC is disabled, on a Stop command, or on an overflow/underflow condition when the One-Shot bit in the Control B Set register (CTRLBSET.ONESHOT) is '1'.

Value	Description
0	Counter is running.
1	Counter is stopped.

Downloaded from Arrow.com.

30.8.12 Counter Value, 8-bit Mode

Name: COUNT
Offset: 0x10
Reset: 0x00
Property: PAC Write-Protection, Write-Synchronized, Read-Synchronized

Bit	7	6	5	4	3	2	1	0
	COUNT[7:0]							
Access	R/W	R/W	R/W	R/W	R/W	R/W	R/W	R/W
Reset	0	0	0	0	0	0	0	0

Bits 7:0 – COUNT[7:0] Counter Value
These bits contain the current counter value.

Downloaded from Arrow.com.

30.8.13 Period Value, 8-bit Mode

Name: PER
Offset: 0x14
Reset: 0xFF
Property: Write-Synchronized

Bit	7	6	5	4	3	2	1	0
	PER[7:0]							
Access	R/W	R/W	R/W	R/W	R/W	R/W	R/W	R/W
Reset	0	0	0	0	0	0	0	1

Bits 7:0 – PER[7:0] Period Value
These bits hold the value of the Period Buffer register PERBUF. The value is copied to PER register on UPDATE condition.

Downloaded from Arrow.com.

30.8.14 Channel x Compare/Capture Value, 8-bit Mode

Name: CCx
Offset: 0x18 + x*0x01 [x=0..1]
Reset: 0x00
Property: Write-Synchronized

Bit	7	6	5	4	3	2	1	0
	CC[7:0]							
Access	R/W	R/W	R/W	R/W	R/W	R/W	R/W	R/W
Reset	0	0	0	0	0	0	0	0

Bits 7:0 – CC[7:0] Channel x Compare/Capture Value
These bits contain the compare/capture value in 8-bit TC mode. In Match frequency (MFRQ) or Match PWM (MPWM) waveform operation (CTRLA.WAVEGEN), the CC0 register is used as a period register.

Downloaded from Arrow.com.

30.9 Register Summary for 16-bit Registers

Offset	Name	Bit Pos.	7	6	5	4	3	2	1	0
0x00	CTRLA	7:0		WAVEGEN[1:0]			MODE[1:0]		ENABLE	SWRST
		15:8			PRESCSYNC[1:0]		RUNSTDBY	PRESCALER[2:0]		
0x02	READREQ	7:0				ADDR[4:0]				
		15:8	RREQ	RCONT						
0x04	CTRLBCLR	7:0	CMD[1:0]					ONESHOT		DIR
0x05	CTRLBSET	7:0	CMD[1:0]					ONESHOT		DIR
0x06	CTRLC	7:0			CPTEN1	CPTEN0			INVEN1	INVEN0
0x07	Reserved									
0x08	DBGCTRL	7:0								DBGRUN
0x09	Reserved									
0x0A	EVCTRL	7:0			TCEI	TCINV		EVACT[2:0]		
		15:8			MCEO1	MCEO0				OVFEO
0x0C	INTENCLR	7:0			MC1	MC0	SYNCRDY		ERR	OVF
0x0D	INTENSET	7:0			MC1	MC0	SYNCRDY		ERR	OVF
0x0E	INTFLAG	7:0			MC1	MC0	SYNCRDY		ERR	OVF
0x0F	STATUS	7:0	SYNCBUSY				STOP			
0x10	COUNT	7:0	COUNT[7:0]							
		15:8	COUNT[15:8]							
0x12 ... 0x17	Reserved									
0x18	CC0	7:0	CC[7:0]							
		15:8	CC[15:8]							
0x1A	CC1	7:0	CC[7:0]							
		15:8	CC[15:8]							

30.10 Register Description for 16-bit Registers

Registers can be 8, 16, or 32 bits wide. Atomic 8-, 16- and 32-bit accesses are supported. In addition, the 8-bit quarters and 16-bit halves of a 32-bit register, and the 8-bit halves of a 16-bit register can be accessed directly.

Some registers are optionally write-protected by the Peripheral Access Controller (PAC). Optional PAC write-protection is denoted by the "PAC Write-Protection" property in each individual register description. For details, refer to 30.5.8 Register Access Protection

Some registers are synchronized when read and/or written. Synchronization is denoted by the "Write-Synchronized" or the "Read-Synchronized" property in each individual register description. For details, refer to 30.6.6 Synchronization.

Some registers are enable-protected, meaning they can only be written when the peripheral is disabled. Enable-protection is denoted by the "Enable-Protected" property in each individual register description.

Downloaded from Arrow.com.

30.10.1 Control A

Name: CTRLA
Offset: 0x00
Reset: 0x00000000
Property: PAC Write-Protection, Write-Synchronized, Enable-Protected

Bit	15	14	13	12	11	10	9	8
			PRESCSYNC[1:0]		RUNSTDBY	PRESCALER[2:0]		
Access			R/W	R/W	R/W	R/W	R/W	R/W
Reset			0	0	0	0	0	0

Bit	7	6	5	4	3	2	1	0
		WAVEGEN[1:0]			MODE[1:0]		ENABLE	SWRST
Access		R/W	R/W		R/W	R/W	R/W	R/W
Reset		0	0		0	0	0	0

Bits 13:12 – PRESCSYNC[1:0] Prescaler and Counter Synchronization
These bits select whether the counter should wrap around on the next GCLK_TCx clock or the next prescaled GCLK_TCx clock. It also makes it possible to reset the prescaler.
These bits are not synchronized.

Value	Name	Description
0x0	GCLK	Reload or reset the counter on next generic clock
0x1	PRESC	Reload or reset the counter on next prescaler clock
0x2	RESYNC	Reload or reset the counter on next generic clock. Reset the prescaler counter
0x3	-	Reserved

Bit 11 – RUNSTDBY Run in Standby
This bit is used to keep the TC running in Standby mode.
This bit is not synchronized.

Value	Description
0	The TC is halted in standby.
1	The TC continues to run in standby.

Bits 10:8 – PRESCALER[2:0] Prescaler
These bits select the counter prescaler factor.
These bits are not synchronized.

Value	Name	Description
0x0	DIV1	Prescaler: GCLK_TC
0x1	DIV2	Prescaler: GCLK_TC/2
0x2	DIV4	Prescaler: GCLK_TC/4
0x3	DIV8	Prescaler: GCLK_TC/8
0x4	DIV16	Prescaler: GCLK_TC/16
0x5	DIV64	Prescaler: GCLK_TC/64
0x6	DIV256	Prescaler: GCLK_TC/256
0x7	DIV1024	Prescaler: GCLK_TC/1024

Bits 6:5 – WAVEGEN[1:0] Waveform Generation Operation
These bits select the waveform generation operation. They affect the top value, as shown in “Waveform Output Operations”. It also controls whether frequency or PWM waveform generation should be used. How these modes differ can also be seen from “Waveform Output Operations”.
These bits are not synchronized.

Downloaded from Arrow.com.

Table 30-7. Waveform Generation Operation

Value	Name	Operation	Top Value	Waveform Output on Match	Waveform Output on Wraparound
0x0	NFRQ	Normal frequency	PER(1)/Max	Toggle	No action
0x1	MFRQ	Match frequency	CC0	Toggle	No action
0x2	NPWM	Normal PWM	PER(1)/Max	Clear when counting up Set when counting down	Set when counting up Clear when counting down
0x3	MPWM	Match PWM	CC0	Clear when counting up Set when counting down	Set when counting up Clear when counting down

Note:

1. This depends on the TC mode. In 8-bit mode, the top value is the Period Value register (PER). In 16- and 32-bit mode it is the maximum value.

Bits 3:2 – MODE[1:0] Timer Counter Mode
These bits select the Counter mode.
These bits are not synchronized.

Value	Name	Description
0x0	COUNT16	Counter in 16-bit mode
0x1	COUNT8	Counter in 8-bit mode
0x2	COUNT32	Counter in 32-bit mode
0x3	-	Reserved

Bit 1 – ENABLE Enable
Due to synchronization, there is delay from writing CTRLA.ENABLE until the peripheral is enabled/disabled. The value written to CTRLA.ENABLE will read back immediately, and the ENABLE Synchronization Busy bit in the SYNCBUSY register (SYNCBUSY.ENABLE) will be set. SYNCBUSY.ENABLE will be cleared when the operation is complete.
This bit is not enable protected.

Value	Description
0	The peripheral is disabled.
1	The peripheral is enabled.

Bit 0 – SWRST Software Reset
Writing a '0' to this bit has no effect.
Writing a '1' to this bit resets all registers in the TC, except DBGCTRL, to their initial state, and the TC will be disabled.
Writing a '1' to CTRLA.SWRST will always take precedence; all other writes in the same write-operation will be discarded.
Due to synchronization there is a delay from writing CTRLA.SWRST until the reset is complete. CTRLA.SWRST and SYNCBUSY.SWRST will both be cleared when the reset is complete.
This bit is not enable protected.

Value	Description
0	There is no reset operation ongoing.
1	The reset operation is ongoing.

Downloaded from Arrow.com.

30.10.2 Read Request

Name: READREQ
Offset: 0x02
Reset: 0x0000

Bit	15	14	13	12	11	10	9	8
	RREQ	RCONT						
Access	W	R/W						
Reset	0	0						

Bit	7	6	5	4	3	2	1	0
				ADDR[4:0]				
Access				R/W	R/W	R/W	R/W	R/W
Reset				0	0	0	0	0

Bit 15 – RREQ Read Request
Writing a zero to this bit has no effect.
This bit will always read as zero.
Writing a one to this bit requests synchronization of the register pointed to by the Address bit group (READREQ.ADDR) and sets the Synchronization Busy bit in the Status register (STATUS.SYNCBUSY).

Bit 14 – RCONT Read Continuously
When continuous synchronization is enabled, the register pointed to by the Address bit group (READREQ.ADDR) will be synchronized automatically every time the register is updated.
READREQ.RCONT prevents READREQ.RREQ from clearing automatically. For the continuous read mode, RREQ bit is required to be set once the RCONT bit is set.
Note: Once the continuous synchronization is enabled, the first write in the COUNT/CLOCK register will be stalled for a maximum of 6 APB + 6 TC clock cycles (the time for the on-going read synchronization to complete).

Value	Description
0	Continuous synchronization is disabled.
1	Continuous synchronization is enabled.

Bits 4:0 – ADDR[4:0] Address
These bits select the offset of the register that needs read synchronization. In the TC, only COUNT and CCx are available for read synchronization.

Downloaded from Arrow.com.

30.10.3 Control B Clear

Name: CTRLBCLR
Offset: 0x04
Reset: 0x00
Property: PAC Write-Protection, Read-Synchronized, Write-Synchronized

This register allows the user to clear bits in the CTRLB register without doing a read-modify-write operation. Changes in this register will also be reflected in the Control B Set register (CTRLBSET).

Bit	7	6	5	4	3	2	1	0
	CMD[1:0]					ONESHOT		DIR
Access	R/W	R/W				R/W		R/W
Reset	0	0				0		0

Bits 7:6 – CMD[1:0] Command
These bits are used for software control of the TC. The commands are executed on the next prescaled GCLK_TC clock cycle. When a command has been executed, the CMD bit group will be read back as zero.
Writing 0x0 to these bits has no effect.
Writing a '1' to any of these bits will clear the pending command.

Table 30-8. Command

Value	Name	Description
0x0	NONE	No action
0x1	RETRIGGER	Force a start, restart or retrigger
0x2	STOP	Force a stop
0x3	-	Reserved

Bit 2 – ONESHOT One-Shot on Counter
This bit controls one-shot operation of the TC.
Writing a '0' to this bit has no effect
Writing a '1' to this bit will disable one-shot operation.

Value	Description
0	The TC will wrap around and continue counting on an Overflow/Underflow condition.
1	The TC will wrap around and stop on the next Underflow/Overflow condition.

Bit 0 – DIR Counter Direction
This bit is used to change the direction of the counter.
Writing a '0' to this bit has no effect.
Writing a '1' to this bit will clear the bit and make the counter count up.

Value	Description
0	The timer/counter is counting up (incrementing).
1	The timer/counter is counting down (decrementing).

Downloaded from Arrow.com.

30.10.4 Control B Set

Name: CTRLBSET
Offset: 0x05
Reset: 0x00
Property: PAC Write-Protection, Read-synchronized, Write-Synchronized

This register allows the user to set bits in the CTRLB register without doing a read-modify-write operation. Changes in this register will also be reflected in the Control B Clear register (CTRLBCLR).

Bit	7	6	5	4	3	2	1	0
	CMD[1:0]					ONESHOT		DIR
Access	R/W	R/W				R/W		R/W
Reset	0	0				0		0

Bits 7:6 – CMD[1:0] Command
These bits are used for software control of the TC. The commands are executed on the next prescaled GCLK_TC clock cycle. When a command has been executed, the CMD bit group will be read back as zero.
Writing 0x0 to these bits has no effect.
Writing a '1' to one of these bits will set a command.

Table 30-9. Command

Value	Name	Description
0x0	NONE	No action
0x1	RETRIGGER	Force a start, restart or retrigger
0x2	STOP	Force a stop
0x3	-	Reserved

Bit 2 – ONESHOT One-Shot on Counter
This bit controls one-shot operation of the TC.
Writing a '0' to this bit has no effect
Writing a '1' to this bit will enable one-shot operation.

Value	Description
0	The TC will wrap around and continue counting on an Overflow/Underflow condition.
1	The TC will wrap around and stop on the next Underflow/Overflow condition.

Bit 0 – DIR Counter Direction
This bit is used to change the direction of the counter.
Writing a '0' to this bit has no effect.
Writing a '1' to this bit will make the counter count down.

Value	Description
0	The timer/counter is counting up (incrementing).
1	The timer/counter is counting down (decrementing).

Downloaded from Arrow.com.

30.10.5 Control C

Name: CTRLC
Offset: 0x06
Reset: 0x00
Property: PAC Write-Protection, Read-synchronized, Write-Synchronized

Bit	7	6	5	4	3	2	1	0
			CPTEN1	CPTEN0			INVEN1	INVEN0
Access			R/W	R/W			R/W	R/W
Reset			0	0			0	0

Bits 4, 5 – CPTENx Capture Channel x Enable
These bits are used to select the capture or compare operation on channel x.
Writing a '1' to CPTENx enables capture on channel x.
Writing a '0' to CPTENx disables capture on channel x.

Bits 0, 1 – INVENx Waveform Output x Inversion Enable
These bits are used to select inversion on the output of channel x.
Writing a '1' to INVENx inverts output from WO[x].
Writing a '0' to INVENx disables inversion of output from WO[x].

Downloaded from Arrow.com.

30.10.6 Debug Control

Name: DBGCTRL
Offset: 0x08
Reset: 0x00
Property: PAC Write-Protection

Bit	7	6	5	4	3	2	1	0
								DBGRUN
Access								R/W
Reset								0

Bit 0 – DBGRUN Debug Run Mode
This bit is not affected by a software Reset, and should not be changed by software while the TC is enabled.

Value	Description
0	The TC is halted when the device is halted in Debug mode.
1	The TC continues normal operation when the device is halted in Debug mode.

Downloaded from Arrow.com.

30.10.7 Event Control

Name: EVCTRL
Offset: 0x0A
Reset: 0x0000
Property: PAC Write-Protection, Enable-Protected

Bit	15	14	13	12	11	10	9	8
			MCEO1	MCEO0				OVFEO
Access			R/W	R/W				R/W
Reset			0	0				0

Bit	7	6	5	4	3	2	1	0
			TCEI	TCINV		EVACT[2:0]		
Access			R/W	R/W		R/W	R/W	R/W
Reset			0	0		0	0	0

Bits 12, 13 – MCEOx Match or Capture Channel x Event Output Enable [x = 1..0]
These bits enable the generation of an event for every match or capture on channel x.

Value	Description
0	Match/Capture event on channel x is disabled and will not be generated.
1	Match/Capture event on channel x is enabled and will be generated for every compare/capture.

Bit 8 – OVFEO Overflow/Underflow Event Output Enable
This bit enables the Overflow/Underflow event. When enabled, an event will be generated when the counter overflows/underflows.

Value	Description
0	Overflow/Underflow event is disabled and will not be generated.
1	Overflow/Underflow event is enabled and will be generated for every counter overflow/underflow.

Bit 5 – TCEI TC Event Enable
This bit is used to enable asynchronous input events to the TC.

Value	Description
0	Incoming events are disabled.
1	Incoming events are enabled.

Bit 4 – TCINV TC Inverted Event Input Polarity
This bit inverts the asynchronous input event source.

Value	Description
0	Input event source is not inverted.
1	Input event source is inverted.

Bits 2:0 – EVACT[2:0] Event Action
These bits define the event action the TC will perform on an event.

Value	Name	Description
0x0	OFF	Event action disabled
0x1	RETRIGGER	Start, restart or retrigger TC on event
0x2	COUNT	Count on event
0x3	START	Start TC on event
0x4	-	Reserved
0x5	PPW	Period captured in CC0, pulse width in CC1
0x6	PWP	Period captured in CC1, pulse width in CC0
0x7	-	Reserved

Downloaded from Arrow.com.

30.10.8 Interrupt Enable Clear

Name: INTENCLR
Offset: 0x0C
Reset: 0x00
Property: PAC Write-Protection

This register allows the user to disable an interrupt without doing a read-modify-write operation. Changes in this register will also be reflected in the Interrupt Enable Set register (INTENSET).

Bit	7	6	5	4	3	2	1	0
			MC1	MC0	SYNCRDY		ERR	OVF
Access			R/W	R/W	R/W		R/W	R/W
Reset			0	0	0		0	0

Bits 4, 5 – MCx Match or Capture Channel x Interrupt Enable [x = 1..0]
Writing a '0' to these bits has no effect.
Writing a '1' to MCx will clear the corresponding Match or Capture Channel x Interrupt Enable bit, which disables the Match or Capture Channel x interrupt.

Value	Description
0	The Match or Capture Channel x interrupt is disabled.
1	The Match or Capture Channel x interrupt is enabled.

Bit 3 – SYNCRDY Synchronization Ready Interrupt Enable
Writing a '0' to this bit has no effect.
Writing a one to this bit will clear the Synchronization Ready Interrupt Disable/Enable bit, which disables the Synchronization Ready interrupt.

Value	Description
0	The Synchronization Ready interrupt is disabled.
1	The Synchronization Ready interrupt is enabled.

Bit 1 – ERR Error Interrupt Enable
Writing a '0' to this bit has no effect.
Writing a '1' to this bit will clear the Error Interrupt Enable bit, which disables the Error interrupt.

Value	Description
0	The Error interrupt is disabled.
1	The Error interrupt is enabled.

Bit 0 – OVF Overflow Interrupt Enable
Writing a '0' to this bit has no effect.
Writing a '1' to this bit will clear the Overflow Interrupt Enable bit, which disables the Overflow interrupt request.

Value	Description
0	The Overflow interrupt is disabled.
1	The Overflow interrupt is enabled.

Downloaded from Arrow.com.

30.10.9 Interrupt Enable Set

Name: INTENSET
Offset: 0x0D
Reset: 0x00
Property: PAC Write-Protection

This register allows the user to enable an interrupt without doing a read-modify-write operation. Changes in this register will also be reflected in the Interrupt Enable Clear register (INTENCLR).

Bit	7	6	5	4	3	2	1	0
			MC1	MC0	SYNCRDY		ERR	OVF
Access			R/W	R/W	R/W		R/W	R/W
Reset			0	0	0		0	0

Bits 4, 5 – MCx Match or Capture Channel x Interrupt Enable [x = 1..0]
Writing a '0' to these bits has no effect.
Writing a '1' to MCx will set the corresponding Match or Capture Channel x Interrupt Enable bit, which enables the Match or Capture Channel x interrupt.

Value	Description
0	The Match or Capture Channel x interrupt is disabled.
1	The Match or Capture Channel x interrupt is enabled.

Bit 3 – SYNCRDY Synchronization Ready Interrupt Enable
Writing a '0' to this bit has no effect.
Writing a one to this bit will set the Synchronization Ready Interrupt Disable/Enable bit, which enables the Synchronization Ready interrupt.

Value	Description
0	The Synchronization Ready interrupt is disabled.
1	The Synchronization Ready interrupt is enabled.

Bit 1 – ERR Error Interrupt Enable
Writing a '0' to this bit has no effect.
Writing a '1' to this bit will set the Error Interrupt Enable bit, which enables the Error interrupt.

Value	Description
0	The Error interrupt is disabled.
1	The Error interrupt is enabled.

Bit 0 – OVF Overflow Interrupt Enable
Writing a '0' to this bit has no effect.
Writing a '1' to this bit will set the Overflow Interrupt Enable bit, which enables the Overflow interrupt request.

Value	Description
0	The Overflow interrupt is disabled.
1	The Overflow interrupt is enabled.

Downloaded from Arrow.com.

30.10.10 Interrupt Flag Status and Clear

Name: INTFLAG
Offset: 0x0E
Reset: 0x00
Property: -

Bit	7	6	5	4	3	2	1	0
			MC1	MC0	SYNCRDY		ERR	OVF
Access			R/W	R/W	R/W		R/W	R/W
Reset			0	0	0		0	0

Bits 4, 5 – MCx Match or Capture Channel x [x = 1..0]
This flag is set on a comparison match, or when the corresponding CCx register contains a valid capture value. This flag is set on the next CLK_TC_CNT cycle, and will generate an interrupt request if the corresponding Match or Capture Channel x Interrupt Enable bit in the Interrupt Enable Set register (INTENSET.MCx) is '1'.
Writing a '0' to one of these bits has no effect.
Writing a '1' to one of these bits will clear the corresponding Match or Capture Channel x Interrupt flag
In capture operation, this flag is automatically cleared when CCx register is read.

Bit 3 – SYNCRDY Synchronization Ready Interrupt Enable
Writing a '0' to this bit has no effect.
Writing a one to this bit will clear the Synchronization Ready Interrupt Disable/Enable bit, which disables the Synchronization Ready interrupt.

Value	Description
0	The Synchronization Ready interrupt is disabled.
1	The Synchronization Ready interrupt is enabled.

Bit 1 – ERR Error Interrupt Flag
This flag is set when a new capture occurs on a channel while the corresponding Match or Capture Channel x Interrupt flag is set, in which case there is nowhere to store the new capture.
Writing a '0' to this bit has no effect.
Writing a '1' to this bit clears the Error Interrupt flag.

Bit 0 – OVF Overflow Interrupt Flag
This flag is set on the next CLK_TC_CNT cycle after an Overflow condition occurs, and will generate an interrupt request if INTENCLR.OVF or INTENSET.OVF is '1'.
Writing a '0' to this bit has no effect.
Writing a '1' to this bit clears the Overflow Interrupt flag.

Downloaded from Arrow.com.

30.10.11 Status

Name: STATUS
Offset: 0x0F
Reset: 0x08
Property: -

Bit	7	6	5	4	3	2	1	0
	SYNCBUSY				STOP			
Access	R				R			
Reset	0				1			

Bit 7 – SYNCBUSY Synchronization Busy
This bit is cleared when the synchronization of registers between the clock domains is complete.
This bit is set when the synchronization of registers between clock domains is started.

Bit 3 – STOP Stop Status Flag
This bit is set when the TC is disabled, on a Stop command, or on an overflow/underflow condition when the One-Shot bit in the Control B Set register (CTRLBSET.ONESHOT) is '1'.

Value	Description
0	Counter is running.
1	Counter is stopped.

Downloaded from Arrow.com.

30.10.12 Counter Value, 16-bit Mode

Name: COUNT
Offset: 0x10
Reset: 0x00
Property: PAC Write-Protection, Write-Synchronized, Read-Synchronized

Bit	15	14	13	12	11	10	9	8
	COUNT[15:8]							
Access	R/W	R/W	R/W	R/W	R/W	R/W	R/W	R/W
Reset	0	0	0	0	0	0	0	0

Bit	7	6	5	4	3	2	1	0
	COUNT[7:0]							
Access	R/W	R/W	R/W	R/W	R/W	R/W	R/W	R/W
Reset	0	0	0	0	0	0	0	0

Bits 15:0 – COUNT[15:0] Counter Value
These bits contain the current counter value.

Downloaded from Arrow.com.

30.10.13 Channel x Compare/Capture Value, 16-bit Mode

Name: CCx
Offset: 0x18 + x*0x02 [x=0..1]
Reset: 0x0000
Property: Write-Synchronized

Bit	15	14	13	12	11	10	9	8
	CC[15:8]							
Access	R/W	R/W	R/W	R/W	R/W	R/W	R/W	R/W
Reset	0	0	0	0	0	0	0	0

Bit	7	6	5	4	3	2	1	0
	CC[7:0]							
Access	R/W	R/W	R/W	R/W	R/W	R/W	R/W	R/W
Reset	0	0	0	0	0	0	0	0

Bits 15:0 – CC[15:0] Channel x Compare/Capture Value
These bits contain the compare/capture value in 16-bit TC mode. In Match frequency (MFRQ) or Match PWM (MPWM) waveform operation (CTRLA.WAVEGEN), the CC0 register is used as a period register.

Downloaded from Arrow.com.

30.11 Register Summary for 32-bit Registers

Offset	Name	Bit Pos.	7	6	5	4	3	2	1	0
0x00	CTRLA	7:0		WAVEGEN[1:0]			MODE[1:0]		ENABLE	SWRST
		15:8			PRESCSYNC[1:0]		RUNSTDBY	PRESCALER[2:0]		
0x02	READREQ	7:0				ADDR[4:0]				
		15:8	RREQ	RCONT						
0x04	CTRLBCLR	7:0	CMD[1:0]					ONESHOT		DIR
0x05	CTRLBSET	7:0	CMD[1:0]					ONESHOT		DIR
0x06	CTRLC	7:0			CPTEN1	CPTEN0			INVEN1	INVEN0
0x07	Reserved									
0x08	DBGCTRL	7:0								DBGRUN
0x09	Reserved									
0x0A	EVCTRL	7:0			TCEI	TCINV		EVACT[2:0]		
		15:8			MCEO1	MCEO0				OVFEO
0x0C	INTENCLR	7:0			MC1	MC0	SYNCRDY		ERR	OVF
0x0D	INTENSET	7:0			MC1	MC0	SYNCRDY		ERR	OVF
0x0E	INTFLAG	7:0			MC1	MC0	SYNCRDY		ERR	OVF
0x0F	STATUS	7:0	SYNCBUSY			SLAVE	STOP			
0x10	COUNT	7:0	COUNT[7:0]							
		15:8	COUNT[15:8]							
		23:16	COUNT[23:16]							
		31:24	COUNT[31:24]							
0x14 ... 0x17	Reserved									
0x18	CC0	7:0	CC[7:0]							
		15:8	CC[15:8]							
		23:16	CC[23:16]							
		31:24	CC[31:24]							
0x1C	CC1	7:0	CC[7:0]							
		15:8	CC[15:8]							
		23:16	CC[23:16]							
		31:24	CC[31:24]							

30.12 Register Description for 32-bit Registers

Registers can be 8, 16, or 32 bits wide. Atomic 8-, 16- and 32-bit accesses are supported. In addition, the 8-bit quarters and 16-bit halves of a 32-bit register, and the 8-bit halves of a 16-bit register can be accessed directly.

Some registers are optionally write-protected by the Peripheral Access Controller (PAC). Optional PAC write-protection is denoted by the "PAC Write-Protection" property in each individual register description. For details, refer to 30.5.8 Register Access Protection

Some registers are synchronized when read and/or written. Synchronization is denoted by the "Write-Synchronized" or the "Read-Synchronized" property in each individual register description. For details, refer to 30.6.6 Synchronization.

Some registers are enable-protected, meaning they can only be written when the peripheral is disabled. Enable-protection is denoted by the "Enable-Protected" property in each individual register description.

Downloaded from Arrow.com.

30.12.1 Control A

Name: CTRLA
Offset: 0x00
Reset: 0x00000000
Property: PAC Write-Protection, Write-Synchronized, Enable-Protected

Bit	15	14	13	12	11	10	9	8
			PRESCSYNC[1:0]		RUNSTDBY	PRESCALER[2:0]		
Access			R/W	R/W	R/W	R/W	R/W	R/W
Reset			0	0	0	0	0	0

Bit	7	6	5	4	3	2	1	0
		WAVEGEN[1:0]			MODE[1:0]		ENABLE	SWRST
Access		R/W	R/W		R/W	R/W	R/W	R/W
Reset		0	0		0	0	0	0

Bits 13:12 – PRESCSYNC[1:0] Prescaler and Counter Synchronization
These bits select whether the counter should wrap around on the next GCLK_TCx clock or the next prescaled GCLK_TCx clock. It also makes it possible to reset the prescaler.
These bits are not synchronized.

Value	Name	Description
0x0	GCLK	Reload or reset the counter on next generic clock
0x1	PRESC	Reload or reset the counter on next prescaler clock
0x2	RESYNC	Reload or reset the counter on next generic clock. Reset the prescaler counter
0x3	-	Reserved

Bit 11 – RUNSTDBY Run in Standby
This bit is used to keep the TC running in Standby mode.
This bit is not synchronized.

Value	Description
0	The TC is halted in standby.
1	The TC continues to run in standby.

Bits 10:8 – PRESCALER[2:0] Prescaler
These bits select the counter prescaler factor.
These bits are not synchronized.

Value	Name	Description
0x0	DIV1	Prescaler: GCLK_TC
0x1	DIV2	Prescaler: GCLK_TC/2
0x2	DIV4	Prescaler: GCLK_TC/4
0x3	DIV8	Prescaler: GCLK_TC/8
0x4	DIV16	Prescaler: GCLK_TC/16
0x5	DIV64	Prescaler: GCLK_TC/64
0x6	DIV256	Prescaler: GCLK_TC/256
0x7	DIV1024	Prescaler: GCLK_TC/1024

Bits 6:5 – WAVEGEN[1:0] Waveform Generation Operation
These bits select the waveform generation operation. They affect the top value, as shown in “Waveform Output Operations”. It also controls whether frequency or PWM waveform generation should be used. How these modes differ can also be seen from “Waveform Output Operations”.
These bits are not synchronized.

Downloaded from Arrow.com.

Table 30-10. Waveform Generation Operation

Value	Name	Operation	Top Value	Waveform Output on Match	Waveform Output on Wraparound
0x0	NFRQ	Normal frequency	PER(1)/Max	Toggle	No action
0x1	MFRQ	Match frequency	CC0	Toggle	No action
0x2	NPWM	Normal PWM	PER(1)/Max	Clear when counting up Set when counting down	Set when counting up Clear when counting down
0x3	MPWM	Match PWM	CC0	Clear when counting up Set when counting down	Set when counting up Clear when counting down

Note:

1. This depends on the TC mode. In 8-bit mode, the top value is the Period Value register (PER). In 16- and 32-bit mode it is the maximum value.

Bits 3:2 – MODE[1:0] Timer Counter Mode
These bits select the Counter mode.
These bits are not synchronized.

Value	Name	Description
0x0	COUNT16	Counter in 16-bit mode
0x1	COUNT8	Counter in 8-bit mode
0x2	COUNT32	Counter in 32-bit mode
0x3	-	Reserved

Bit 1 – ENABLE Enable
Due to synchronization, there is delay from writing CTRLA.ENABLE until the peripheral is enabled/disabled. The value written to CTRLA.ENABLE will read back immediately, and the ENABLE Synchronization Busy bit in the SYNCBUSY register (SYNCBUSY.ENABLE) will be set. SYNCBUSY.ENABLE will be cleared when the operation is complete.
This bit is not enable protected.

Value	Description
0	The peripheral is disabled.
1	The peripheral is enabled.

Bit 0 – SWRST Software Reset
Writing a '0' to this bit has no effect.
Writing a '1' to this bit resets all registers in the TC, except DBGCTRL, to their initial state, and the TC will be disabled.
Writing a '1' to CTRLA.SWRST will always take precedence; all other writes in the same write-operation will be discarded.
Due to synchronization there is a delay from writing CTRLA.SWRST until the reset is complete. CTRLA.SWRST and SYNCBUSY.SWRST will both be cleared when the reset is complete.
This bit is not enable protected.

Value	Description
0	There is no reset operation ongoing.
1	The reset operation is ongoing.

Downloaded from Arrow.com.

30.12.2 Read Request

Name: READREQ
Offset: 0x02
Reset: 0x0000

Bit	15	14	13	12	11	10	9	8
	RREQ	RCONT						
Access	W	R/W						
Reset	0	0						

Bit	7	6	5	4	3	2	1	0
				ADDR[4:0]				
Access				R/W	R/W	R/W	R/W	R/W
Reset				0	0	0	0	0

Bit 15 – RREQ Read Request
Writing a zero to this bit has no effect.
This bit will always read as zero.
Writing a one to this bit requests synchronization of the register pointed to by the Address bit group (READREQ.ADDR) and sets the Synchronization Busy bit in the Status register (STATUS.SYNCBUSY).

Bit 14 – RCONT Read Continuously
When continuous synchronization is enabled, the register pointed to by the Address bit group (READREQ.ADDR) will be synchronized automatically every time the register is updated.
READREQ.RCONT prevents READREQ.RREQ from clearing automatically. For the continuous read mode, RREQ bit is required to be set once the RCONT bit is set.
Note: Once the continuous synchronization is enabled, the first write in the COUNT/CLOCK register will be stalled for a maximum of 6 APB + 6 TC clock cycles (the time for the on-going read synchronization to complete).

Value	Description
0	Continuous synchronization is disabled.
1	Continuous synchronization is enabled.

Bits 4:0 – ADDR[4:0] Address
These bits select the offset of the register that needs read synchronization. In the TC, only COUNT and CCx are available for read synchronization.

Downloaded from Arrow.com.

30.12.3 Control B Clear

Name: CTRLBCLR
Offset: 0x04
Reset: 0x00
Property: PAC Write-Protection, Read-Synchronized, Write-Synchronized

This register allows the user to clear bits in the CTRLB register without doing a read-modify-write operation. Changes in this register will also be reflected in the Control B Set register (CTRLBSET).

Bit	7	6	5	4	3	2	1	0
	CMD[1:0]					ONESHOT		DIR
Access	R/W	R/W				R/W		R/W
Reset	0	0				0		0

Bits 7:6 – CMD[1:0] Command
These bits are used for software control of the TC. The commands are executed on the next prescaled GCLK_TC clock cycle. When a command has been executed, the CMD bit group will be read back as zero.
Writing 0x0 to these bits has no effect.
Writing a '1' to any of these bits will clear the pending command.

Table 30-11. Command

Value	Name	Description
0x0	NONE	No action
0x1	RETRIGGER	Force a start, restart or retrigger
0x2	STOP	Force a stop
0x3	-	Reserved

Bit 2 – ONESHOT One-Shot on Counter
This bit controls one-shot operation of the TC.
Writing a '0' to this bit has no effect
Writing a '1' to this bit will disable one-shot operation.

Value	Description
0	The TC will wrap around and continue counting on an Overflow/Underflow condition.
1	The TC will wrap around and stop on the next Underflow/Overflow condition.

Bit 0 – DIR Counter Direction
This bit is used to change the direction of the counter.
Writing a '0' to this bit has no effect.
Writing a '1' to this bit will clear the bit and make the counter count up.

Value	Description
0	The timer/counter is counting up (incrementing).
1	The timer/counter is counting down (decrementing).

Downloaded from Arrow.com.

30.12.4 Control B Set

Name: CTRLBSET
Offset: 0x05
Reset: 0x00
Property: PAC Write-Protection, Read-synchronized, Write-Synchronized

This register allows the user to set bits in the CTRLB register without doing a read-modify-write operation. Changes in this register will also be reflected in the Control B Clear register (CTRLBCLR).

Bit	7	6	5	4	3	2	1	0
	CMD[1:0]					ONESHOT		DIR
Access	R/W	R/W				R/W		R/W
Reset	0	0				0		0

Bits 7:6 – CMD[1:0] Command
These bits are used for software control of the TC. The commands are executed on the next prescaled GCLK_TC clock cycle. When a command has been executed, the CMD bit group will be read back as zero.
Writing 0x0 to these bits has no effect.
Writing a '1' to one of these bits will set a command.

Table 30-12. Command

Value	Name	Description
0x0	NONE	No action
0x1	RETRIGGER	Force a start, restart or retrigger
0x2	STOP	Force a stop
0x3	-	Reserved

Bit 2 – ONESHOT One-Shot on Counter
This bit controls one-shot operation of the TC.
Writing a '0' to this bit has no effect
Writing a '1' to this bit will enable one-shot operation.

Value	Description
0	The TC will wrap around and continue counting on an Overflow/Underflow condition.
1	The TC will wrap around and stop on the next Underflow/Overflow condition.

Bit 0 – DIR Counter Direction
This bit is used to change the direction of the counter.
Writing a '0' to this bit has no effect.
Writing a '1' to this bit will make the counter count down.

Value	Description
0	The timer/counter is counting up (incrementing).
1	The timer/counter is counting down (decrementing).

Downloaded from Arrow.com.

30.12.5 Control C

Name: CTRLC
Offset: 0x06
Reset: 0x00
Property: PAC Write-Protection, Read-synchronized, Write-Synchronized

Bit	7	6	5	4	3	2	1	0
			CPTEN1	CPTEN0			INVEN1	INVEN0
Access			R/W	R/W			R/W	R/W
Reset			0	0			0	0

Bits 4, 5 – CPTENx Capture Channel x Enable
These bits are used to select the capture or compare operation on channel x.
Writing a '1' to CPTENx enables capture on channel x.
Writing a '0' to CPTENx disables capture on channel x.

Bits 0, 1 – INVENx Waveform Output x Inversion Enable
These bits are used to select inversion on the output of channel x.
Writing a '1' to INVENx inverts output from WO[x].
Writing a '0' to INVENx disables inversion of output from WO[x].

Downloaded from Arrow.com.

30.12.6 Debug Control

Name: DBGCTRL
Offset: 0x08
Reset: 0x00
Property: PAC Write-Protection

Bit	7	6	5	4	3	2	1	0
								DBGRUN
Access								R/W
Reset								0

Bit 0 – DBGRUN Debug Run Mode
This bit is not affected by a software Reset, and should not be changed by software while the TC is enabled.

Value	Description
0	The TC is halted when the device is halted in Debug mode.
1	The TC continues normal operation when the device is halted in Debug mode.

Downloaded from Arrow.com.

30.12.7 Event Control

Name: EVCTRL
Offset: 0x0A
Reset: 0x0000
Property: PAC Write-Protection, Enable-Protected

Bit	15	14	13	12	11	10	9	8
			MCEO1	MCEO0				OVFEO
Access			R/W	R/W				R/W
Reset			0	0				0

Bit	7	6	5	4	3	2	1	0
			TCEI	TCINV		EVACT[2:0]		
Access			R/W	R/W		R/W	R/W	R/W
Reset			0	0		0	0	0

Bits 12, 13 – MCEOx Match or Capture Channel x Event Output Enable [x = 1..0]
These bits enable the generation of an event for every match or capture on channel x.

Value	Description
0	Match/Capture event on channel x is disabled and will not be generated.
1	Match/Capture event on channel x is enabled and will be generated for every compare/capture.

Bit 8 – OVFEO Overflow/Underflow Event Output Enable
This bit enables the Overflow/Underflow event. When enabled, an event will be generated when the counter overflows/underflows.

Value	Description
0	Overflow/Underflow event is disabled and will not be generated.
1	Overflow/Underflow event is enabled and will be generated for every counter overflow/underflow.

Bit 5 – TCEI TC Event Enable
This bit is used to enable asynchronous input events to the TC.

Value	Description
0	Incoming events are disabled.
1	Incoming events are enabled.

Bit 4 – TCINV TC Inverted Event Input Polarity
This bit inverts the asynchronous input event source.

Value	Description
0	Input event source is not inverted.
1	Input event source is inverted.

Bits 2:0 – EVACT[2:0] Event Action
These bits define the event action the TC will perform on an event.

Value	Name	Description
0x0	OFF	Event action disabled
0x1	RETRIGGER	Start, restart or retrigger TC on event
0x2	COUNT	Count on event
0x3	START	Start TC on event
0x4	-	Reserved
0x5	PPW	Period captured in CC0, pulse width in CC1
0x6	PWP	Period captured in CC1, pulse width in CC0
0x7	-	Reserved

Downloaded from Arrow.com.

30.12.8 Interrupt Enable Clear

Name: INTENCLR
Offset: 0x0C
Reset: 0x00
Property: PAC Write-Protection

This register allows the user to disable an interrupt without doing a read-modify-write operation. Changes in this register will also be reflected in the Interrupt Enable Set register (INTENSET).

Bit	7	6	5	4	3	2	1	0
			MC1	MC0	SYNCRDY		ERR	OVF
Access			R/W	R/W	R/W		R/W	R/W
Reset			0	0	0		0	0

Bits 4, 5 – MCx Match or Capture Channel x Interrupt Enable [x = 1..0]
Writing a '0' to these bits has no effect.
Writing a '1' to MCx will clear the corresponding Match or Capture Channel x Interrupt Enable bit, which disables the Match or Capture Channel x interrupt.

Value	Description
0	The Match or Capture Channel x interrupt is disabled.
1	The Match or Capture Channel x interrupt is enabled.

Bit 3 – SYNCRDY Synchronization Ready Interrupt Enable
Writing a '0' to this bit has no effect.
Writing a one to this bit will clear the Synchronization Ready Interrupt Disable/Enable bit, which disables the Synchronization Ready interrupt.

Value	Description
0	The Synchronization Ready interrupt is disabled.
1	The Synchronization Ready interrupt is enabled.

Bit 1 – ERR Error Interrupt Enable
Writing a '0' to this bit has no effect.
Writing a '1' to this bit will clear the Error Interrupt Enable bit, which disables the Error interrupt.

Value	Description
0	The Error interrupt is disabled.
1	The Error interrupt is enabled.

Bit 0 – OVF Overflow Interrupt Enable
Writing a '0' to this bit has no effect.
Writing a '1' to this bit will clear the Overflow Interrupt Enable bit, which disables the Overflow interrupt request.

Value	Description
0	The Overflow interrupt is disabled.
1	The Overflow interrupt is enabled.

Downloaded from Arrow.com.

30.12.9 Interrupt Enable Set

Name: INTENSET
Offset: 0x0D
Reset: 0x00
Property: PAC Write-Protection

This register allows the user to enable an interrupt without doing a read-modify-write operation. Changes in this register will also be reflected in the Interrupt Enable Clear register (INTENCLR).

Bit	7	6	5	4	3	2	1	0
			MC1	MC0	SYNCRDY		ERR	OVF
Access			R/W	R/W	R/W		R/W	R/W
Reset			0	0	0		0	0

Bits 4, 5 – MCx Match or Capture Channel x Interrupt Enable [x = 1..0]
Writing a '0' to these bits has no effect.
Writing a '1' to MCx will set the corresponding Match or Capture Channel x Interrupt Enable bit, which enables the Match or Capture Channel x interrupt.

Value	Description
0	The Match or Capture Channel x interrupt is disabled.
1	The Match or Capture Channel x interrupt is enabled.

Bit 3 – SYNCRDY Synchronization Ready Interrupt Enable
Writing a '0' to this bit has no effect.
Writing a one to this bit will set the Synchronization Ready Interrupt Disable/Enable bit, which enables the Synchronization Ready interrupt.

Value	Description
0	The Synchronization Ready interrupt is disabled.
1	The Synchronization Ready interrupt is enabled.

Bit 1 – ERR Error Interrupt Enable
Writing a '0' to this bit has no effect.
Writing a '1' to this bit will set the Error Interrupt Enable bit, which enables the Error interrupt.

Value	Description
0	The Error interrupt is disabled.
1	The Error interrupt is enabled.

Bit 0 – OVF Overflow Interrupt Enable
Writing a '0' to this bit has no effect.
Writing a '1' to this bit will set the Overflow Interrupt Enable bit, which enables the Overflow interrupt request.

Value	Description
0	The Overflow interrupt is disabled.
1	The Overflow interrupt is enabled.

Downloaded from Arrow.com.

30.12.10 Interrupt Flag Status and Clear

Name: INTFLAG
Offset: 0x0E
Reset: 0x00
Property: -

Bit	7	6	5	4	3	2	1	0
			MC1	MC0	SYNCRDY		ERR	OVF
Access			R/W	R/W	R/W		R/W	R/W
Reset			0	0	0		0	0

Bits 4, 5 – MCx Match or Capture Channel x [x = 1..0]
This flag is set on a comparison match, or when the corresponding CCx register contains a valid capture value. This flag is set on the next CLK_TC_CNT cycle, and will generate an interrupt request if the corresponding Match or Capture Channel x Interrupt Enable bit in the Interrupt Enable Set register (INTENSET.MCx) is '1'.
Writing a '0' to one of these bits has no effect.
Writing a '1' to one of these bits will clear the corresponding Match or Capture Channel x Interrupt flag
In capture operation, this flag is automatically cleared when CCx register is read.

Bit 3 – SYNCRDY Synchronization Ready Interrupt Enable
Writing a '0' to this bit has no effect.
Writing a one to this bit will clear the Synchronization Ready Interrupt Disable/Enable bit, which disables the Synchronization Ready interrupt.

Value	Description
0	The Synchronization Ready interrupt is disabled.
1	The Synchronization Ready interrupt is enabled.

Bit 1 – ERR Error Interrupt Flag
This flag is set when a new capture occurs on a channel while the corresponding Match or Capture Channel x Interrupt flag is set, in which case there is nowhere to store the new capture.
Writing a '0' to this bit has no effect.
Writing a '1' to this bit clears the Error Interrupt flag.

Bit 0 – OVF Overflow Interrupt Flag
This flag is set on the next CLK_TC_CNT cycle after an Overflow condition occurs, and will generate an interrupt request if INTENCLR.OVF or INTENSET.OVF is '1'.
Writing a '0' to this bit has no effect.
Writing a '1' to this bit clears the Overflow Interrupt flag.

Downloaded from Arrow.com.

30.12.11 Status

Name: STATUS
Offset: 0x0F
Reset: 0x08
Property: -

Bit	7	6	5	4	3	2	1	0
	SYNCBUSY			SLAVE	STOP			
Access	R			R	R			
Reset	0			0	1			

Bit 7 – SYNCBUSY Synchronization Busy
This bit is cleared when the synchronization of registers between the clock domains is complete.
This bit is set when the synchronization of registers between clock domains is started.

Bit 4 – SLAVE Client Status Flag
This bit is only available in 32-bit mode on the client TC (i.e., TC5 and/or TC7). The bit is set when the associated host TC (TC4 and TC6, respectively) is set to run in 32-bit mode.

Bit 3 – STOP Stop Status Flag
This bit is set when the TC is disabled, on a Stop command, or on an overflow/underflow condition when the One-Shot bit in the Control B Set register (CTRLBSET.ONESHOT) is '1'.

Value	Description
0	Counter is running.
1	Counter is stopped.

Downloaded from Arrow.com.

30.12.12 Counter Value, 32-bit Mode

Name: COUNT
Offset: 0x10
Reset: 0x00
Property: PAC Write-Protection, Write-Synchronized, Read-Synchronized

Bit	31	30	29	28	27	26	25	24
	COUNT[31:24]							
Access	R/W	R/W	R/W	R/W	R/W	R/W	R/W	R/W
Reset	0	0	0	0	0	0	0	0

Bit	23	22	21	20	19	18	17	16
	COUNT[23:16]							
Access	R/W	R/W	R/W	R/W	R/W	R/W	R/W	R/W
Reset	0	0	0	0	0	0	0	0

Bit	15	14	13	12	11	10	9	8
	COUNT[15:8]							
Access	R/W	R/W	R/W	R/W	R/W	R/W	R/W	R/W
Reset	0	0	0	0	0	0	0	0

Bit	7	6	5	4	3	2	1	0
	COUNT[7:0]							
Access	R/W	R/W	R/W	R/W	R/W	R/W	R/W	R/W
Reset	0	0	0	0	0	0	0	0

Bits 31:0 – COUNT[31:0] Counter Value
These bits contain the current counter value.

Downloaded from Arrow.com.

30.12.13 Channel x Compare/Capture Value, 32-bit Mode

Name: CCx
Offset: 0x18 + x*0x04 [x=0..1]
Reset: 0x00000000
Property: Write-Synchronized

Bit	31	30	29	28	27	26	25	24
	CC[31:24]							
Access	R/W	R/W	R/W	R/W	R/W	R/W	R/W	R/W
Reset	0	0	0	0	0	0	0	0

Bit	23	22	21	20	19	18	17	16
	CC[23:16]							
Access	R/W	R/W	R/W	R/W	R/W	R/W	R/W	R/W
Reset	0	0	0	0	0	0	0	0

Bit	15	14	13	12	11	10	9	8
	CC[15:8]							
Access	R/W	R/W	R/W	R/W	R/W	R/W	R/W	R/W
Reset	0	0	0	0	0	0	0	0

Bit	7	6	5	4	3	2	1	0
	CC[7:0]							
Access	R/W	R/W	R/W	R/W	R/W	R/W	R/W	R/W
Reset	0	0	0	0	0	0	0	0

Bits 31:0 – CC[31:0] Channel x Compare/Capture Value
These bits contain the compare/capture value in 32-bit TC mode. In Match frequency (MFRQ) or Match PWM (MPWM) waveform operation (CTRLA.WAVEGEN), the CC0 register is used as a period register.

Downloaded from Arrow.com.

31. TCC – Timer/Counter for Control Applications

31.1 Overview

The device provides up to four instances of the Timer/Counter for Control applications (TCC) peripheral, TCC[0:3].

Each TCC instance consists of a counter, a prescaler, compare/capture channels and control logic. The counter can be set to count events or clock pulses. The counter together with the compare/capture channels can be configured to time stamp input events, allowing capture of frequency and pulse width. It can also perform waveform generation, such as frequency generation and Pulse-Width Modulation (PWM).

Waveform extensions are featured for motor control, ballast, LED, H-bridge, power converters, and other power control applications. They allow for low-side and high-side output with optional dead-time insertion. Waveform extensions can also generate a synchronized bit pattern across the waveform output pins. The fault options enable fault protection for safe and deterministic handling, disabling and shut down of external drivers.

Figure 31-1 illustrates the block diagram of TCC.

Note: The TCC configurations, such as channel numbers and features, may be reduced for some of the TCC instances.

Related Links

7.2.5 TCC Configurations

31.2 Features

- Up to four compare/capture channels (CC) with:
  - Double buffered period setting
  - Double buffered compare or capture channel
  - Circular buffer on period and compare channel registers
- Waveform generation:
  - Frequency generation
  - Single-slope pulse-width modulation (PWM)
  - Dual-slope pulse-width modulation with half-cycle reload capability
- Input capture:
  - Event capture
  - Frequency capture
  - Pulse-width capture
- Waveform extensions:
  - Configurable distribution of compare channels outputs across port pins
  - Low- and high-side output with programmable dead-time insertion
  - Waveform swap option with double buffer support
  - Pattern generation with double buffer support
  - Dithering support
- Fault protection for safe disabling of drivers:
  - Two recoverable fault sources
  - Two non-recoverable fault sources
  - Debugger can be source of non-recoverable fault
- Input events:
  - Two input events (EVx) for counter
  - One input event (MCx) for each channel
- Output events:
  - Three output events (Count, Re-Trigger and Overflow) available for counter

Downloaded from Arrow.com.

  - One Compare Match/Input Capture event output for each channel
- Interrupts:
  - Overflow and Re-Trigger interrupt
  - Compare Match/Input Capture interrupt
  - Interrupt on fault detection
- Can be used with DMA and can trigger DMA transactions

31.3 Block Diagram

Figure 31-1. Timer/Counter for Control Applications - Block Diagram

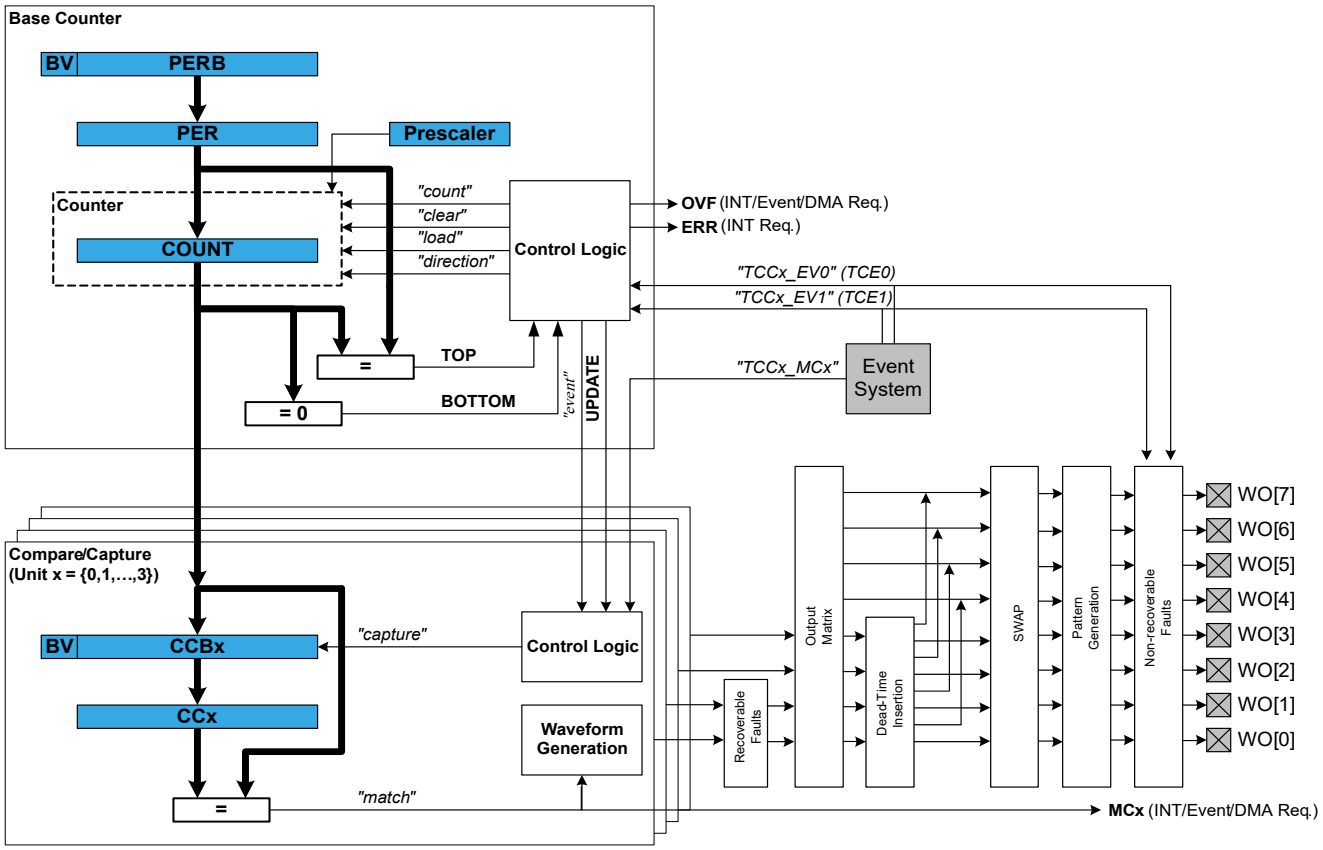

31.4 Signal Description

Pin Name	Type	Description
TCCx/WO[0]	Digital output	Compare channel 0 waveform output
TCCx/WO[1]	Digital output	Compare channel 1 waveform output
…	...	...
TCCx/WO[WO_NUM-1]	Digital output	Compare channel n waveform output

Refer to *I/O Multiplexing and Considerations* for details on the pin mapping for this peripheral. One signal can be mapped on several pins.

Related Links

7. I/O Multiplexing and Considerations

Downloaded from Arrow.com.

31.5 Product Dependencies

In order to use this peripheral, other parts of the system must be configured correctly, as described below.

31.5.1 I/O Lines

In order to use the I/O lines of this peripheral, the I/O pins must be configured using the I/O Pin Controller (PORT).

Related Links

23. PORT - I/O Pin Controller

31.5.2 Power Management

This peripheral can continue to operate in any sleep mode where its source clock is running. The interrupts can wake up the device from sleep modes. Events connected to the event system can trigger other operations in the system without exiting sleep modes.

31.5.3 Clocks

The TCC bus clocks (CLK_TCCx_APB) can be enabled and disabled in the Power Manager module. The default state of CLK_TCCx_APB can be found in the Peripheral Clock Masking section (see the Related Links below).

A generic clock (GCLK_TCCx) is required to clock the TCC. This clock must be configured and enabled in the generic clock controller before using the TCC. Note that TCC0 and TCC1 share a peripheral clock generator.

The generic clocks (GCLK_TCCx) are asynchronous to the bus clock (CLK_TCCx_APB). Due to this asynchronicity, writing certain registers will require synchronization between the clock domains. Refer to 31.6.6 Synchronization for further details.

Related Links

15. GCLK - Generic Clock Controller
16.6.2.6 Peripheral Clock Masking

31.5.4 DMA

The DMA request lines are connected to the DMA Controller (DMAC). In order to use DMA requests with this peripheral the DMAC must be configured first. Refer to *DMAC – Direct Memory Access Controller* for details.

Related Links

20. DMAC – Direct Memory Access Controller

31.5.5 Interrupts

The interrupt request line is connected to the Interrupt Controller. In order to use interrupt requests of this peripheral, the Interrupt Controller (NVIC) must be configured first. Refer to *Nested Vector Interrupt Controller* for details.

Related Links

11.2 Nested Vector Interrupt Controller

31.5.6 Events

The events of this peripheral are connected to the Event System.

Related Links

24. EVSYS – Event System

31.5.7 Debug Operation

When the CPU is halted in debug mode, this peripheral will halt normal operation. This peripheral can be forced to continue operation during debugging - refer to the Debug Control (DBGCTRL) register for details.

Refer to 31.8.8 DBGCTRL register for details.

31.5.8 Register Access Protection

Registers with write-access can be optionally write-protected by the Peripheral Access Controller (PAC), except for the following:

Downloaded from Arrow.com.

- Interrupt Flag register (INTFLAG)
- Status register (STATUS)
- Period and Period Buffer registers (PER, PERB)
- Compare/Capture and Compare/Capture Buffer registers (CCx, CCBx)
- Control Waveform register (WAVE)
- Control Waveform Buffer register (WAVEB)
- Pattern Generation Value and Pattern Generation Value Buffer registers (PATT, PATTB)

Note: Optional write-protection is indicated by the "PAC Write-Protection" property in the register description.

Write-protection does not apply for accesses through an external debugger.

31.5.9 Analog Connections

Not applicable.

31.6 Functional Description

31.6.1 Principle of Operation

The following definitions are used throughout the documentation:

Table 31-1. Timer/Counter for Control Applications - Definitions

Name	Description
TOP	The counter reaches TOP when it becomes equal to the highest value in the count sequence. The TOP value can be the same as Period (PER) or the Compare Channel 0 (CC0) register value depending on the waveform generator mode in 31.6.2.5.1 Waveform Output Generation Operations.
ZERO	The counter reaches ZERO when it contains all zeroes.
MAX	The counter reaches maximum when it contains all ones.
UPDATE	The timer/counter signals an update when it reaches ZERO or TOP, depending on the direction settings.
Timer	The timer/counter clock control is handled by an internal source.
Counter	The clock control is handled externally (e.g., counting external events).
CC	For compare operations, the CC are referred to as "compare channels." For capture operations, the CC are referred to as "capture channels."

Each TCC instance has up to four compare/capture channels (CCx).

The counter register (COUNT), period registers with buffer (PER and PERB), and compare and capture registers with buffers (CCx and CCBx) are 16- or 24-bit registers, depending on each TCC instance. Each buffer register has a buffer valid (BUFV) flag that indicates when the buffer contains a new value.

Under normal operation, the counter value is continuously compared to the TOP or ZERO value to determine whether the counter has reached TOP or ZERO. In either case, the TCC can generate interrupt requests, request DMA transactions, or generate events for the Event System. In waveform generator mode, these comparisons are used to set the waveform period or pulse width.

A prescaled generic clock (GCLK_TCCx) and events from the event system can be used to control the counter. The event system is also used as a source to the input capture.

The Recoverable Fault Unit enables event controlled waveforms by acting directly on the generated waveforms of the TCC compare channels output. These events can restart, halt the timer/counter period, shorten the output pulse active time, or disable waveform output as long as the fault condition is present. This can typically be used for current sensing regulation, and zero-crossing and demagnetization re-triggering.

Downloaded from Arrow.com.

The MCE0 and MCE1 asynchronous event sources are shared with the Recoverable Fault Unit. Only asynchronous events are used internally when fault unit extension is enabled. For further details on how to configure asynchronous events routing, refer to *EVSYS – Event System*.

Recoverable fault sources can be filtered and/or windowed to avoid false triggering, for example from I/O pin glitches, by using digital filtering, input blanking, and qualification options. See also 31.6.3.5 Recoverable Faults.

In order to support applications with different types of motor control, ballast, LED, H-bridge, power converter, and other types of power switching applications, the following independent units are implemented in some of the TCC instances as optional and successive units:

- Recoverable faults and non-recoverable faults
- Output matrix
- Dead-time insertion
- Swap
- Pattern generation

See also Figure 31-1.

The output matrix (OTMX) can distribute and route out the TCC waveform outputs across the port pins in different configurations, each optimized for different application types. The Dead-Time Insertion (DTI) unit splits the four lower OTMX outputs into two non-overlapping signals: the non-inverted low side (LS) and inverted high side (HS) of the waveform output with optional dead-time insertion between LS and HS switching. The SWAP unit can swap the LS and HS pin outputs, and can be used for fast decay motor control.

The pattern generation unit can be used to generate synchronized waveforms with constant logic level on TCC UPDATE conditions. This is useful for easy stepper motor and full bridge control.

The non-recoverable fault module enables event controlled fault protection by acting directly on the generated waveforms of the timer/counter compare channel outputs. When a non-recoverable fault condition is detected, the output waveforms are forced to a preconfigured value that is safe for the application. This is typically used for instant and predictable shut down and disabling high current or voltage drives.

The count event sources (TCE0 and TCE1) are shared with the non-recoverable fault extension. The events can be optionally filtered. If the filter options are not used, the non-recoverable faults provide an immediate asynchronous action on waveform output, even for cases where the clock is not present. For further details on how to configure asynchronous events routing, refer to section *EVSYS – Event System*.

Related Links

24. EVSYS – Event System

31.6.2 Basic Operation

31.6.2.1 Initialization

The following registers are enable-protected, meaning that they can only be written when the TCC is disabled(CTRLA.ENABLE=0):

- Control A (CTRLA) register, except Run Standby (RUNSTDBY), Enable (ENABLE) and Software Reset (SWRST) bits
- Recoverable Fault n Control registers (FCTRLA and FCTRLB)
- Waveform Extension Control register (WEXCTRL)
- Drive Control register (DRVCTRL)
- Event Control register (EVCTRL)

Enable-protected bits in the CTRLA register can be written at the same time as CTRLA.ENABLE is written to '1', but not at the same time as CTRLA.ENABLE is written to '0'. Enable-protection is denoted by the “Enable-Protected” property in the register description.

Before the TCC is enabled, it must be configured as outlined by the following steps:

1. Enable the TCC bus clock (CLK_TCCx_APB).
2. If Capture mode is required, enable the channel in capture mode by writing a '1' to the Capture Enable bit in the Control A register (CTRLA.CPTEN).

Optionally, the following configurations can be set before enabling TCC:

Downloaded from Arrow.com.

1. Select PRESCALER setting in the Control A register (CTRLA.PRESCALER).
2. Select Prescaler Synchronization setting in Control A register (CTRLA.PRESCSYNC).
3. If down-counting operation is desired, write the Counter Direction bit in the Control B Set register (CTRLBSET.DIR) to '1'.
4. Select the Waveform Generation operation in the WAVE register (WAVE.WAVEGEN).
5. Select the Waveform Output Polarity in the WAVE register (WAVE.POL).
6. The waveform output can be inverted for the individual channels using the Waveform Output Invert Enable bit group in the Driver register (DRVCTRL.INVEN).

31.6.2.2 Enabling, Disabling, and Resetting

The TCC is enabled by writing a '1' to the Enable bit in the Control A register (CTRLA.ENABLE). The TCC is disabled by writing a zero to CTRLA.ENABLE.

The TCC is reset by writing '1' to the Software Reset bit in the Control A register (CTRLA.SWRST). All registers in the TCC, except DBGCTRL, will be reset to their initial state, and the TCC will be disabled. Refer to Control A (31.8.1 CTRLA) register for details.

The TCC should be disabled before the TCC is reset to avoid undefined behavior.

31.6.2.3 Prescaler Selection

The GCLK_TCCx clock is fed into the internal prescaler.

The prescaler consists of a counter that counts up to the selected prescaler value, whereupon the output of the prescaler toggles.

If the prescaler value is higher than one, the counter update condition can be optionally executed on the next GCLK_TCC clock pulse or the next prescaled clock pulse. For further details, refer to the Prescaler (CTRLA.PRESCALER) and Counter Synchronization (CTRLA.PRESYNC) descriptions.

Prescaler outputs from 1 to 1/1024 are available. For a complete list of available prescaler outputs, see the register description for the Prescaler bit group in the Control A register (CTRLA.PRESCALER).

Note: When counting events, the prescaler is bypassed.

The joint stream of prescaler ticks and event action ticks is called CLK_TCC_COUNT.

Figure 31-2. Prescaler

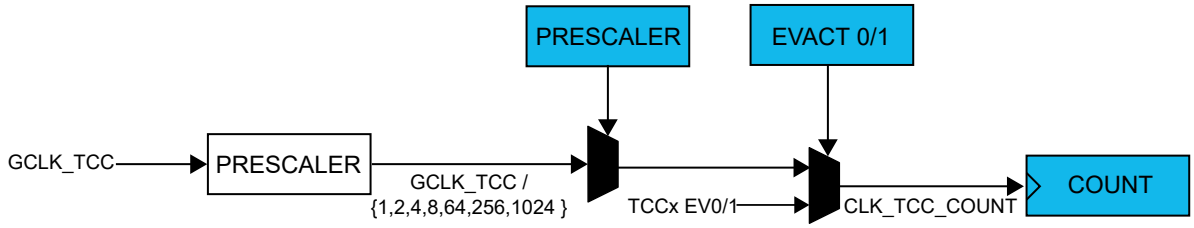

31.6.2.4 Counter Operation

Depending on the mode of operation, the counter is cleared, reloaded, incremented, or decremented at each TCC clock input (CLK_TCC_COUNT). A counter clear or reload mark the end of current counter cycle and the start of a new one.

The counting direction is set by the Direction bit in the Control B register (CTRLB.DIR). If the bit is zero, it's counting up and one if counting down.

The counter will count up or down for each tick (clock or event) until it reaches TOP or ZERO. When it's counting up and TOP is reached, the counter will be set to zero at the next tick (overflow) and the Overflow Interrupt Flag in the Interrupt Flag Status and Clear register (INTFLAG.OVF) will be set. When down-counting, the counter is reloaded with the TOP value when ZERO is reached (underflow), and INTFLAG.OVF is set.

INTFLAG.OVF can be used to trigger an interrupt, a DMA request, or an event. An overflow/underflow occurrence (i.e. a compare match with TOP/ZERO) will stop counting if the One-Shot bit in the Control B register is set (CTRLBSET.ONESHOT). The One-Shot feature is explained in the Additional Features section.

Downloaded from Arrow.com.

Figure 31-3. Counter Operation

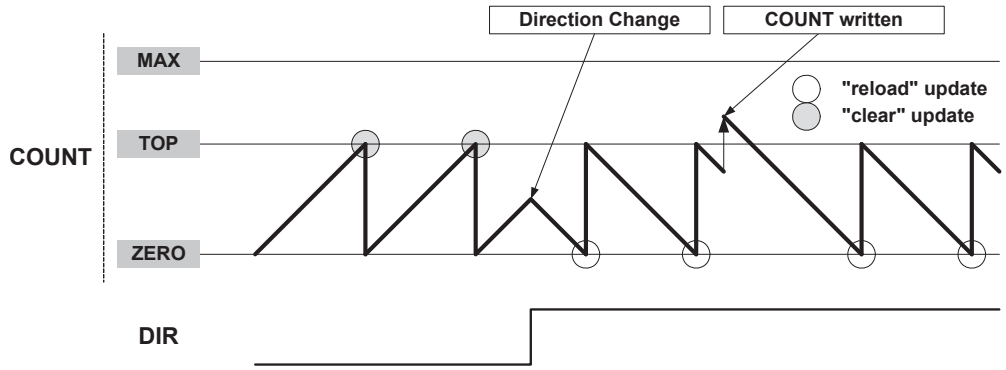

It is possible to change the counter value (by writing directly in the COUNT register) even when the counter is running. The COUNT value will always be ZERO or TOP, depending on direction set by CTRLBSET.DIR or CTRLBCLR.DIR, when starting the TCC, unless a different value has been written to it, or the TCC has been stopped at a value other than ZERO. The write access has higher priority than count, clear, or reload. The direction of the counter can also be changed during normal operation. See also Figure 31-3.

Stop Command

A stop command can be issued from software by using TCC Command bits in Control B Set register (CTRLBSET.CMD=0x2, STOP).

When a stop is detected while the counter is running, the counter will maintain its current value. If the waveform generation (WG) is used, all waveforms are set to a state defined in Non-Recoverable State x Output Enable bit and Non- Recoverable State x Output Value bit in the Driver Control register (DRVCTRL.NREx and DRVCTRL.NRVx), and the Stop bit in the Status register is set (STATUS.STOP).

Pause Event Action

A pause command can be issued when the stop event action is configured in the Input Event Action 1 bits in Event Control register (EVCTRL.EVACT1=0x3, STOP).

When a pause is detected, the counter can stop immediatly maintaining its current value and all waveforms keep their current state, as long as a start event action is detected: Input Event Action 0 bits in Event Control register (EVCTRL.EVACT0=0x3, START).

Re-Trigger Command and Event Action

A re-trigger command can be issued from software by using TCC Command bits in Control B Set register (CTRLBSET.CMD=0x1, RETRIGGER), or from event when the re-trigger event action is configured in the Input Event 0/1 Action bits in Event Control register (EVCTRL.EVACTn=0x1, RETRIGGER).

When the command is detected during counting operation, the counter will be reloaded or cleared, depending on the counting direction (CTRLBSET.DIR or CTRLBCLR.DIR). The Re-Trigger bit in the Interrupt Flag Status and Clear register will be set (INTFLAG.TRG). It is also possible to generate an event by writing a '1' to the Re-Trigger Event Output Enable bit in the Event Control register (EVCTRL.TRGEO). If the re-trigger command is detected when the counter is stopped, the counter will resume counting operation from the value in COUNT.

Note:
When a re-trigger event action is configured in the Event Action bits in the Event Control register (EVCTRL.EVACTn=0x1, RETRIGGER), enabling the counter will not start the counter. The counter will start on the next incoming event and restart on corresponding following event.

Start Event Action

The start action can be selected in the Event Control register (EVCTRL.EVACT0=0x3, START) and can start the counting operation when previously stopped. The event has no effect if the counter is already counting. When the module is enabled, the counter operation starts when the event is received or when a re-trigger software command is applied.

Downloaded from Arrow.com.

Note:
When a start event action is configured in the Event Action bits in the Event Control register (EVCTRL.EVACT0=0x3, START), enabling the counter will not start the counter. The counter will start on the next incoming event, but it will not restart on subsequent events.

Count Event Action

The TCC can count events. When an event is received, the counter increases or decreases the value, depending on direction settings (CTRLBSET.DIR or CTRLBCLR.DIR).

The count event action is selected by the Event Action 0 bit group in the Event Control register (EVCTRL.EVACT0=0x5, COUNT).

Direction Event Action

The direction event action can be selected in the Event Control register (EVCTRL.EVACT1=0x2, DIR). When this event is used, the asynchronous event path specified in the event system must be configured or selected. The direction event action can be used to control the direction of the counter operation, depending on external events level. When received, the event level overrides the Direction settings (CTRLBSET.DIR or CTRLBCLR.DIR) and the direction bit value is updated accordingly.

Increment Event Action

The increment event action can be selected in the Event Control register (EVCTRL.EVACT0=0x4, INC) and can change the counter state when an event is received. When the TCE0 event (TCCx_EV0) is received, the counter increments, whatever the direction setting (CTRLBSET.DIR or CTRLBCLR.DIR) is.

Decrement Event Action

The decrement event action can be selected in the Event Control register (EVCTRL.EVACT1=0x4, DEC) and can change the counter state when an event is received. When the TCE1 (TCCx_EV1) event is received, the counter decrements, whatever the direction setting (CTRLBSET.DIR or CTRLBCLR.DIR) is.

Non-recoverable Fault Event Action

Non-recoverable fault actions can be selected in the Event Control register (EVCTRL.EVACTn=0x7, FAULT). When received, the counter will be stopped and the output of the compare channels is overridden according to the Driver Control register settings (DRVCTRL.NREx and DRVCTRL.NRVx). TCE0 and TCE1 must be configured as asynchronous events.

Event Action Off

If the event action is disabled (EVCTRL.EVACTn=0x0, OFF), enabling the counter will also start the counter.

Related Links
31.6.3.1 One-Shot Operation

31.6.2.5 Compare Operations

By default, the Compare/Capture channel is configured for compare operations. To perform capture operations, it must be re-configured.

When using the TCC with the Compare/Capture Value registers (CCx) for compare operations, the counter value is continuously compared to the values in the CCx registers. This can be used for timer or for waveform operation.

The Channel x Compare/Capture Buffer Value (CCBx) registers provide double buffer capability. The double buffering synchronizes the update of the CCx register with the buffer value at the UPDATE condition or a force update command (CTRLBSET.CMD=0x3, UPDATE). For further details, refer to 31.6.2.6 Double Buffering. The synchronization prevents the occurrence of odd-length, non-symmetrical pulses and ensures glitch-free output.

31.6.2.5.1 Waveform Output Generation Operations

The compare channels can be used for waveform generation on output port pins. To make the waveform available on the connected pin, the following requirements must be fulfilled:

1. Choose a waveform generation mode in the Waveform Generation Operation bit in Waveform register (WAVE.WAVEGEN).
2. Optionally invert the waveform output WO[x] by writing the corresponding Waveform Output x Inversion bit in the Driver Control register (DRVCTRL.INVENx).

Downloaded from Arrow.com.

3. Configure the pins with the I/O Pin Controller. Refer to *PORT - I/O Pin Controller* for details.

The counter value is continuously compared with each CCx value. On a comparison match, the Match or Capture Channel x bit in the Interrupt Flag Status and Clear register (INTFLAG.MCx) will be set on the next zero-to-one transition of CLK_TCC_COUNT (see Normal Frequency Operation). An interrupt and/or event can be generated on the same condition if Match/Capture occurs, i.e. INTENSET.MCx and/or EVCTRL.MCEOx is '1'. Both interrupt and event can be generated simultaneously. The same condition generates a DMA request.

There are seven waveform configurations for the Waveform Generation Operation bit group in the Waveform register (WAVE.WAVEGEN). This will influence how the waveform is generated and impose restrictions on the top value. The configurations are:

- Normal Frequency (NFRQ)
- Match Frequency (MFRQ)
- Normal Pulse-Width Modulation (NPWM)
- Dual-slope, interrupt/event at TOP (DSTOP)
- Dual-slope, interrupt/event at ZERO (DSBOTTOM)
- Dual-slope, interrupt/event at Top and ZERO (DSBOTH)
- Dual-slope, critical interrupt/event at ZERO (DSCRITICAL)

When using MFRQ configuration, the TOP value is defined by the CC0 register value. For the other waveform operations, the TOP value is defined by the Period (PER) register value.

For dual-slope waveform operations, the update time occurs when the counter reaches ZERO. For the other waveforms generation modes, the update time occurs on counter wraparound, on overflow, underflow, or re-trigger.

The table below shows the update counter and overflow event/interrupt generation conditions in different operation modes.

Table 31-2. Counter Update and Overflow Event/interrupt Conditions

Name	Operation	TOP	Update	Output Waveform		OVFIF/Event	
				On Match	On Update	Up	Down
NFRQ	Normal Frequency	PER	TOP/ ZERO	Toggle	Stable	TOP	ZERO
MFRQ	Match Frequency	CC0	TOP/ ZERO	Toggle	Stable	TOP	ZERO
NPWM	Single-slope PWM	PER	TOP/ ZERO	See section 'Output Polarity' below		TOP	ZERO
DSCRITICAL	Dual-slope PWM	PER	ZERO			-	ZERO
DSBOTTOM	Dual-slope PWM	PER	ZERO			-	ZERO
DSBOTH	Dual-slope PWM	PER	TOP(1) & ZERO			TOP	ZERO
DSTOP	Dual-slope PWM	PER	ZERO			TOP	–

1. The UPDATE condition on TOP only will occur when circular buffer is enabled for the channel.

Related Links

31.6.3.2 Circular Buffer

23. PORT - I/O Pin Controller

Downloaded from Arrow.com.

31.6.2.5.2 Normal Frequency (NFRQ)

For Normal Frequency generation, the period time (T) is controlled by the period register (PER). The waveform generation output (WO[x]) is toggled on each compare match between COUNT and CCx, and the corresponding Match or Capture Channel x Interrupt Flag (EVCTRL.MCEOx) will be set.

Figure 31-4. Normal Frequency Operation

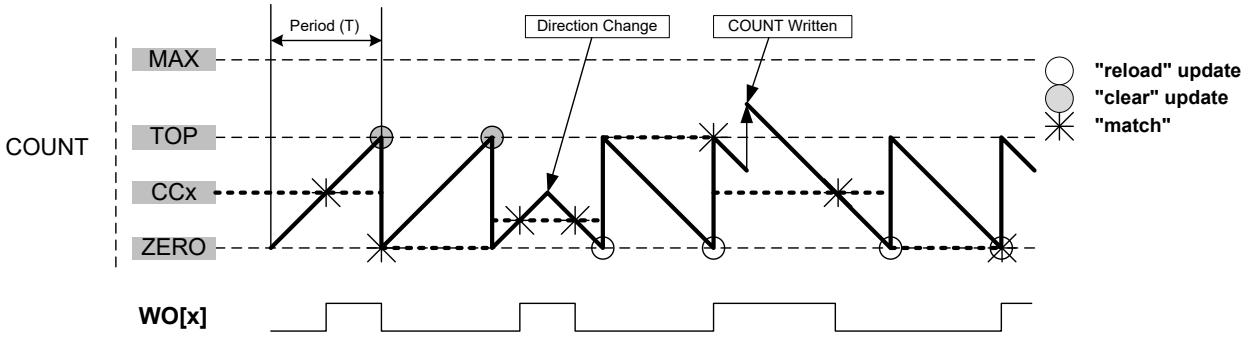

31.6.2.5.3 Match Frequency (MFRQ)

For Match Frequency generation, the period time (T) is controlled by CC0 register instead of PER. WO[0] toggles on each update condition.

Figure 31-5. Match Frequency Operation

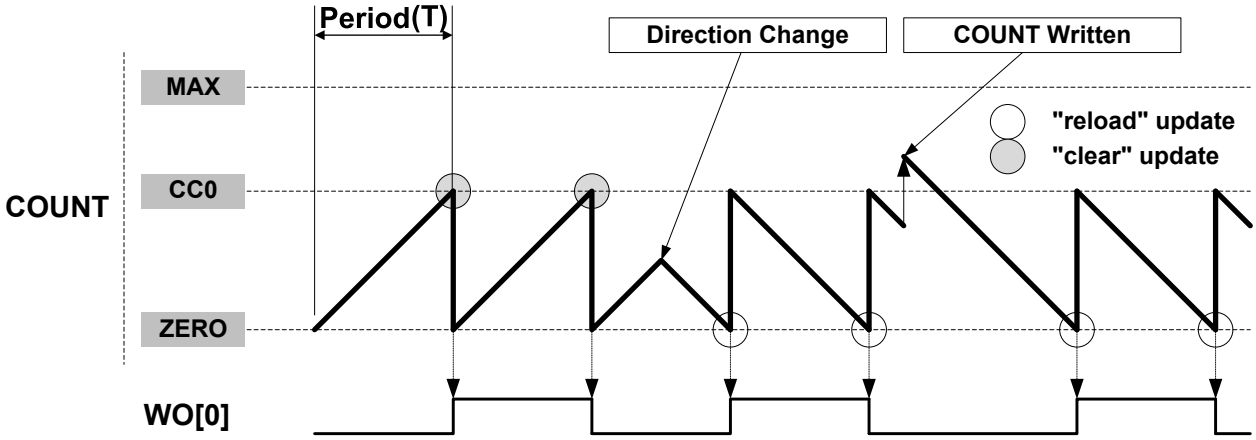

31.6.2.5.4 Normal Pulse-Width Modulation (NPWM)

NPWM uses single-slope PWM generation.

31.6.2.5.5 Single-Slope PWM Operation

For single-slope PWM generation, the period time (T) is controlled by Top value, and CCx controls the duty cycle of the generated waveform output. When up-counting, the WO[x] is set at start or compare match between the COUNT and TOP values, and cleared on compare match between COUNT and CCx register values. When down-counting, the WO[x] is cleared at start or compare match between the COUNT and ZERO values, and set on compare match between COUNT and CCx register values.

Downloaded from Arrow.com.

Figure 31-6. Single-Slope PWM Operation

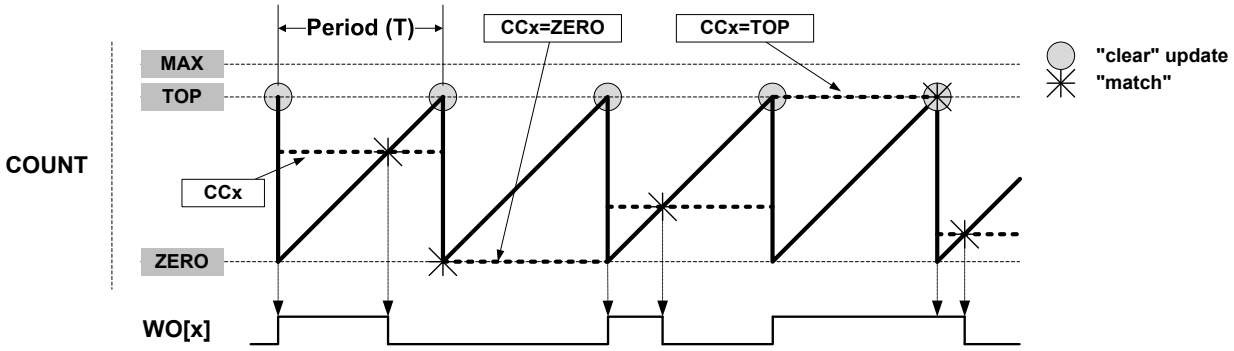

The following equation calculates the exact resolution for a single-slope PWM (R_{PWM_SS}) waveform:

$$R_{PWM_SS} = \frac{\log(TOP+1)}{\log(2)}$$

The PWM frequency depends on the Period register value (PER) and the peripheral clock frequency (f_{GCLK_TCC}), and can be calculated by the following equation:

$$f_{PWM_SS} = \frac{f_{GCLK_TCC}}{N(TOP+1)}$$

Where N represents the prescaler divider used (1, 2, 4, 8, 16, 64, 256, 1024).

31.6.2.5.6 Dual-Slope PWM Generation

For dual-slope PWM generation, the period setting (TOP) is controlled by PER, while CCx control the duty cycle of the generated waveform output. The figure below shows how the counter repeatedly counts from ZERO to PER and then from PER to ZERO. The waveform generator output is set on compare match when up-counting, and cleared on compare match when down-counting. An interrupt and/or event is generated on TOP (when counting upwards) and/or ZERO (when counting up or down).

In DSBOTH operation, the circular buffer must be enabled to enable the update condition on TOP.

Figure 31-7. Dual-Slope Pulse Width Modulation

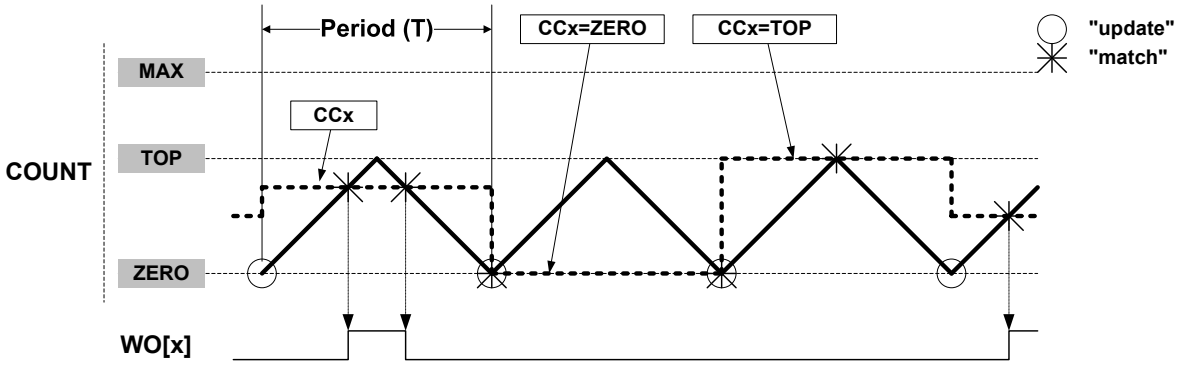

Using dual-slope PWM results in a lower maximum operation frequency compared to single-slope PWM generation. The period (TOP) defines the PWM resolution. The minimum resolution is 1 bit (TOP=0x00000001).

The following equation calculates the exact resolution for dual-slope PWM (R_{PWM_DS}):

$$R_{PWM_DS} = \frac{\log(PER+1)}{\log(2)}.$$

The PWM frequency f_{PWM_DS} depends on the period setting (TOP) and the peripheral clock frequency f_{GCLK_TCC}, and can be calculated by the following equation:

$$f_{PWM_DS} = \frac{f_{GCLK_TCC}}{2N \cdot PER}$$

Downloaded from Arrow.com.

N represents the prescaler divider used. The waveform generated will have a maximum frequency of half of the TCC clock frequency (f_{GCLK_TCC}) when TOP is set to 0x00000001 and no prescaling is used.

The pulse width (P_{PWM_DS}) depends on the compare channel (CCx) register value and the peripheral clock frequency (f_{GCLK_TCC}), and can be calculated by the following equation:

$$P_{PWM_DS} = \frac{2N \cdot (TOP - CCx)}{f_{GCLK_TCC}}$$

N represents the prescaler divider used.

Note: In DSTOP, DSBOTTOM and DSBOTH operation, when TOP is lower than MAX/2, the CCx MSB bit defines the ramp on which the CCx Match interrupt or event is generated. (Rising if CCx[MSB] = 0, falling if CCx[MSB] = 1.)

Related Links

31.6.3.2 Circular Buffer

31.6.2.5.7 Dual-Slope Critical PWM Generation

Critical mode generation allows generation of non-aligned centered pulses. In this mode, the period time is controlled by PER while CCx control the generated waveform output edge during up-counting and CC(x+CC_NUM/2) control the generated waveform output edge during down-counting.

Figure 31-8. Dual-Slope Critical Pulse Width Modulation (N=CC_NUM)

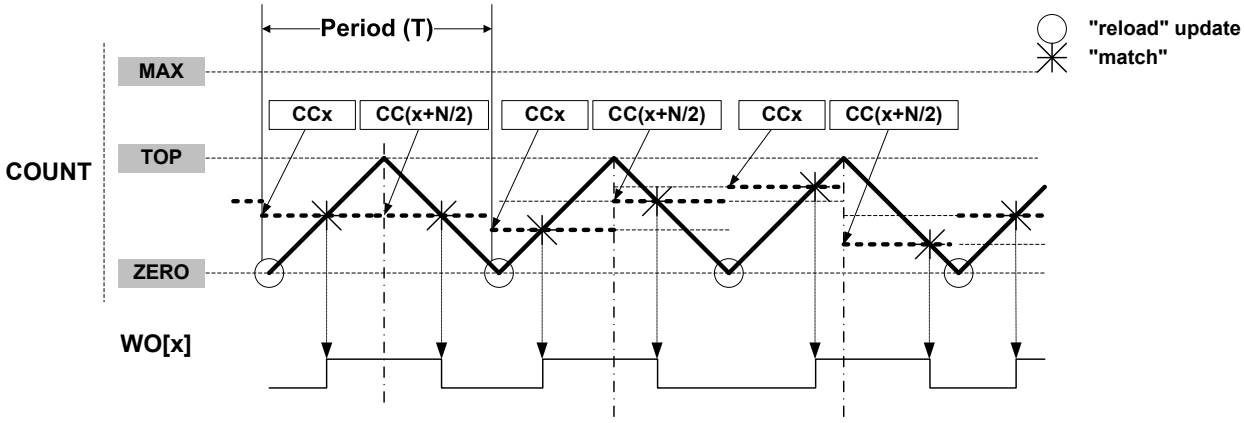

31.6.2.5.8 Output Polarity

The polarity (WAVE.POLx) is available in all waveform output generation. In single-slope and dual-slope PWM operation, it is possible to invert the pulse edge alignment individually on start or end of a PWM cycle for each compare channels. The table below shows the waveform output set/clear conditions, depending on the settings of timer/counter, direction, and polarity.

Table 31-3. Waveform Generation Set/Clear Conditions

Waveform Generation operation	DIR	POLx	Waveform Generation Output Update	
			Set	Clear
Single-Slope PWM	0	0	Timer/counter matches TOP	Timer/counter matches CCx
		1	Timer/counter matches CC	Timer/counter matches TOP
	1	0	Timer/counter matches CC	Timer/counter matches ZERO
		1	Timer/counter matches ZERO	Timer/counter matches CC
Dual-Slope PWM	x	0	Timer/counter matches CC when counting up	Timer/counter matches CC when counting down
		1	Timer/counter matches CC when counting down	Timer/counter matches CC when counting up

Downloaded from Arrow.com.

In Normal and Match Frequency, the WAVE.POLx value represents the initial state of the waveform output.

31.6.2.6 Double Buffering

The Pattern (PATT), Waveform (WAVE), Period (PER) and Compare Channels (CCx) registers are all double buffered. Each buffer register has a buffer valid (PATTBV, WAVEBV, PERBV and CCBVx) bit in the STATUS register, which indicates that the buffer register contains a valid value that can be copied into the corresponding register. .

When the buffer valid flag bit in the STATUS register is '1' and the Lock Update bit in the CTRLB register is set to '0', (writing CTRLBCLR.LUPD to '1'), double buffering is enabled: the data from buffer registers will be copied into the corresponding register under hardware UPDATE conditions, then the buffer valid flags bit in the STATUS register are automatically cleared by hardware.

Note: Software update command (CTRLBSET.CMD=0x3) act independently of LUPD value.

A compare register is double buffered as in the following figure.

Figure 31-9. Compare Channel Double Buffering

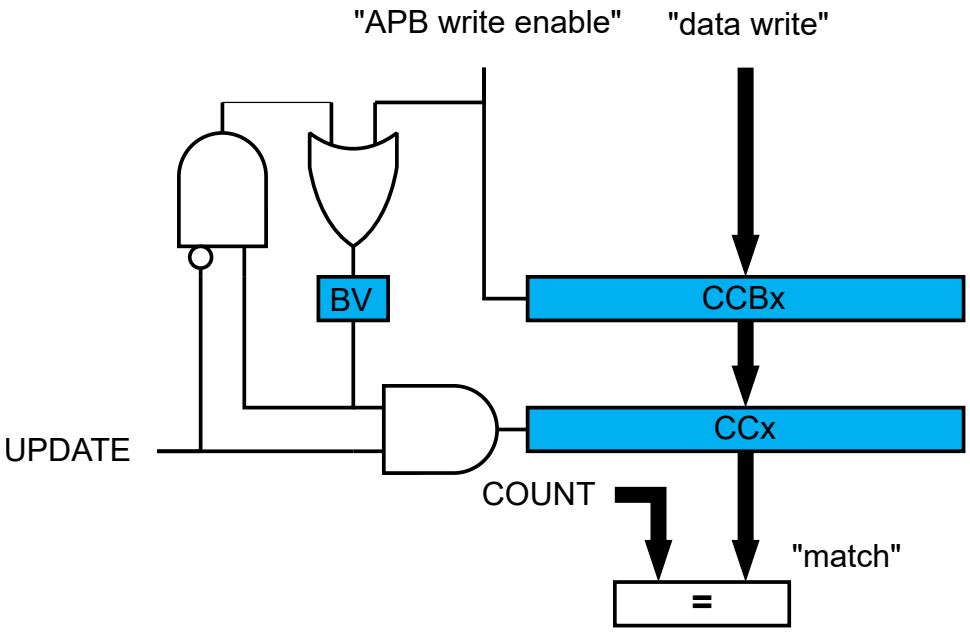

Both the registers (PATT/WAVE/PER/CCx) and corresponding buffer registers (PATTB/WAVEBV/PERB/CCBx) are available in the I/O register map, and the double buffering feature is not mandatory. The double buffering is disabled by writing a '1' to CTRLSET.LUPD.

Note: In NFRQ, MFRQ or PWM down-counting counter mode (CTRLBSET.DIR=1), when double buffering is enabled (CTRLBCLR.LUPD=1), PERB register is continuously copied into the PER independently of update conditions.

Changing the Period

The counter period can be changed by writing a new Top value to the Period register (PER or CC0, depending on the waveform generation mode), any period update on registers (PER or CCx) is effective after the synchronization delay, whatever double buffering enabling is.

Downloaded from Arrow.com.

Figure 31-10. Unbuffered Single-Slope Up-Counting Operation

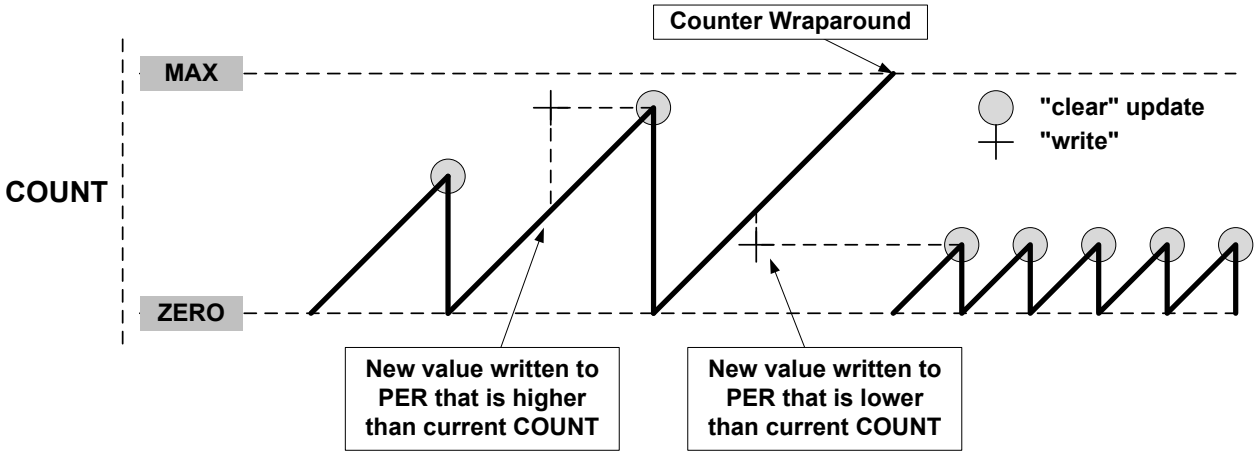

Figure 31-11. Unbuffered Single-Slope Down-Counting Operation

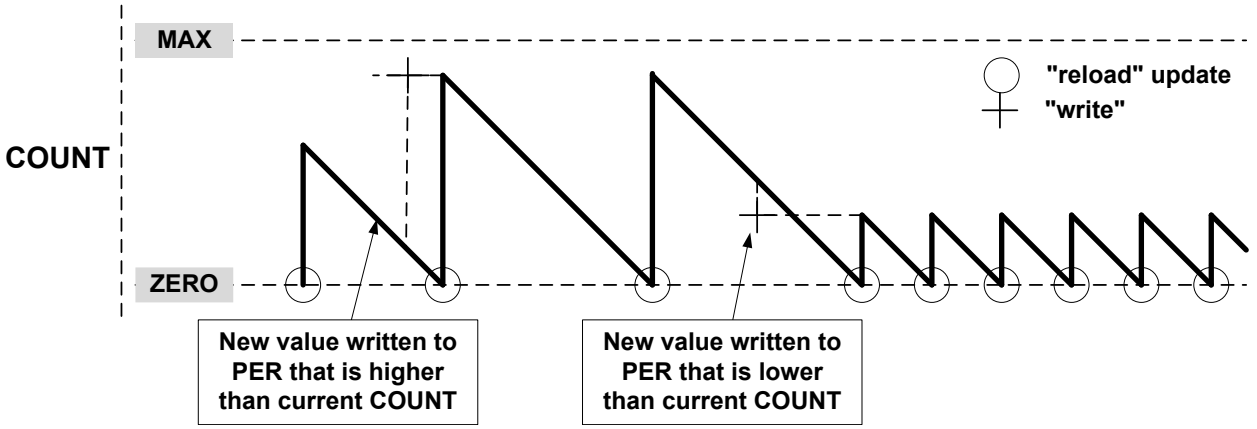

A counter wraparound can occur in any operation mode when up-counting without buffering, see Figure 31-10. COUNT and TOP are continuously compared, so when a new value that is lower than the current COUNT is written to TOP, COUNT will wrap before a compare match.

Figure 31-12. Unbuffered Dual-Slope Operation

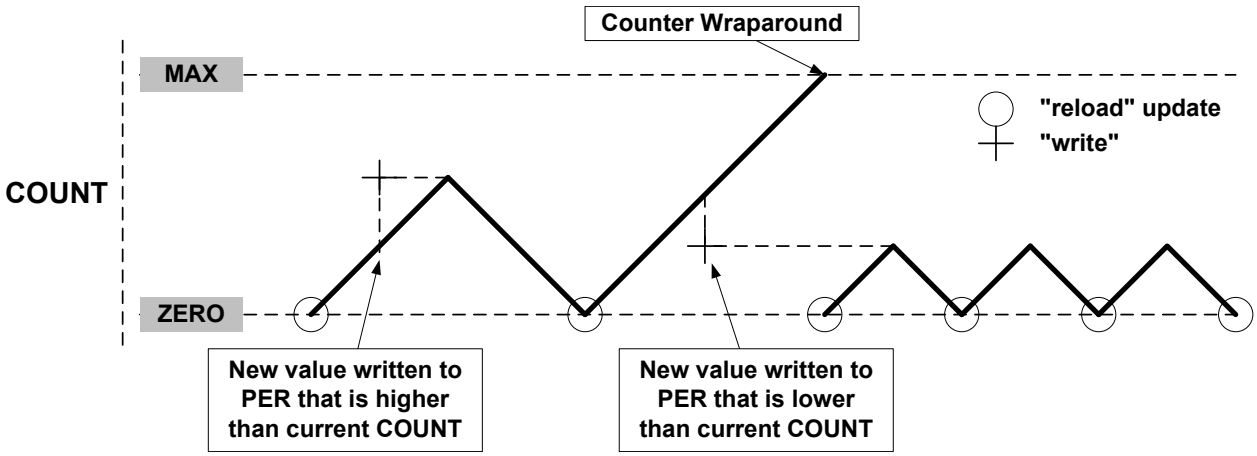

When double buffering is used, the buffer can be written at any time and the counter will still maintain correct operation. The period register is always updated on the update condition, as shown in Figure 31-13. This prevents wraparound and the generation of odd waveforms.

Downloaded from Arrow.com.

Figure 31-13. Changing the Period Using Buffering

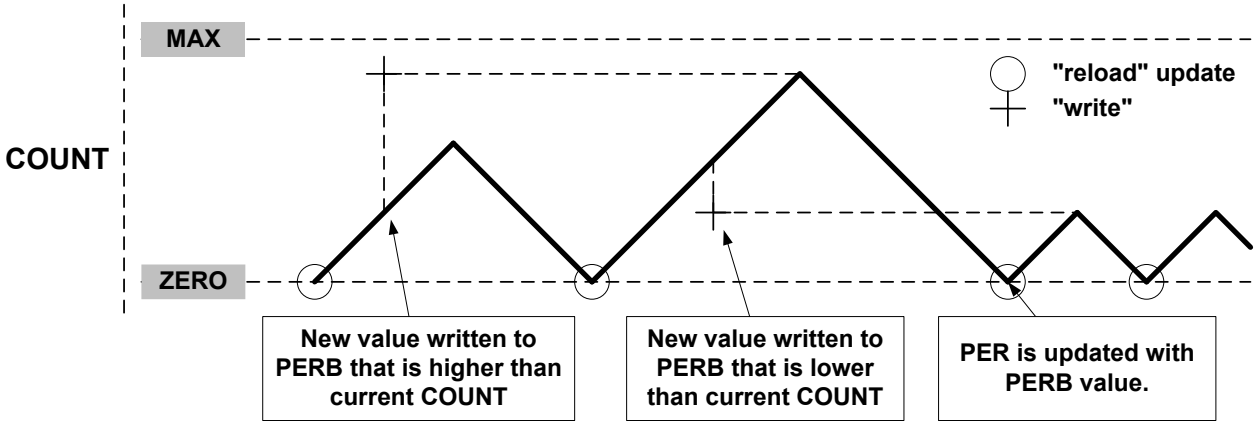

31.6.2.7 Capture Operations

To enable and use capture operations, the Match or Capture Channel x Event Input Enable bit in the Event Control register (EVCTRL.MCEIx) must be written to '1'. The capture channels to be used must also be enabled in the Capture Channel x Enable bit in the Control A register (CTRLA.CPTENx) before capturing can be performed.

Event Capture Action

The compare/capture channels can be used as input capture channels to capture events from the Event System, and give them a timestamp. The following figure shows four capture events for one capture channel.

Figure 31-14. Input Capture Timing

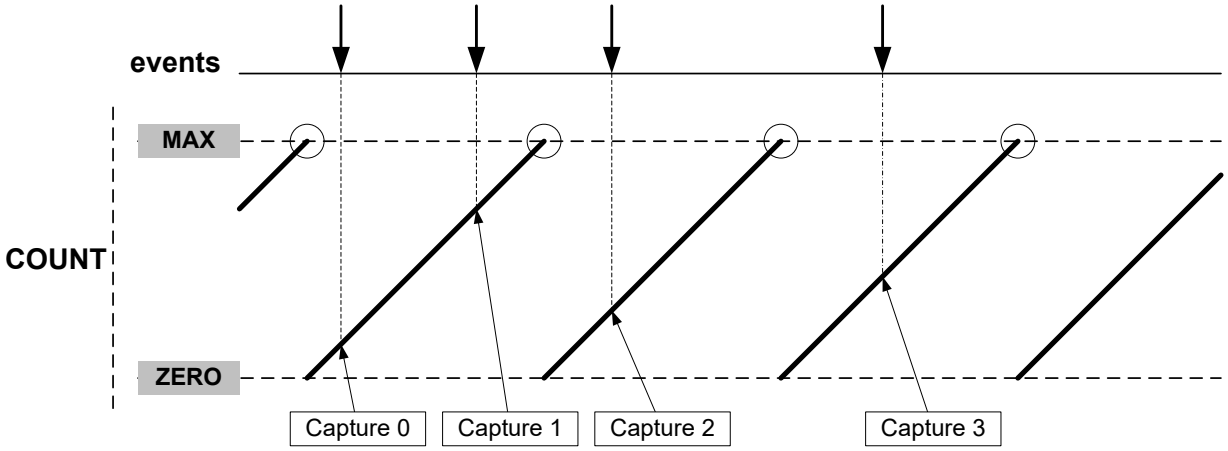

For input capture, the buffer register and the corresponding CCx act like a FIFO. When CCx is empty or read, any content in CCBx is transferred to CCx. The buffer valid flag is passed to set the CCx interrupt flag (IF) and generate the optional interrupt, event or DMA request. CCBx register value can't be read, all captured data must be read from CCx register.

Downloaded from Arrow.com.

Figure 31-15. Capture Double Buffering

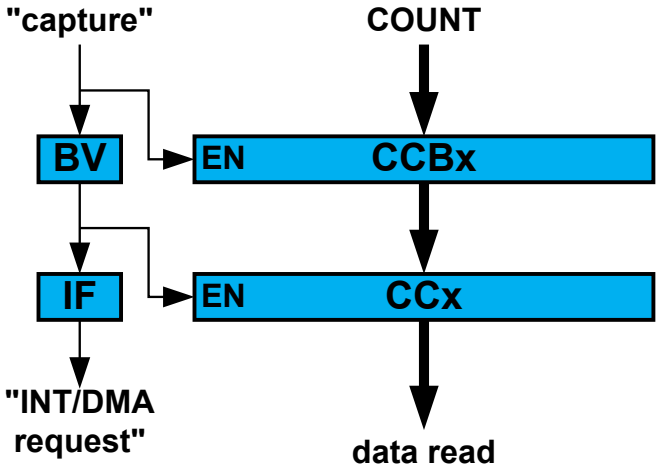

The TCC can detect capture overflow of the input capture channels: When a new capture event is detected while the Capture Buffer Valid flag (STATUS.CCBV) is still set, the new timestamp will not be stored and INTFLAG.ERR will be set.

Period and Pulse-Width (PPW) Capture Action

The TCC can perform two input captures and restart the counter on one of the edges. This enables the TCC to measure the pulse-width and period and to characterize the frequency *f* and *dutyCycle* of an input signal:

$$f = \frac{1}{T} \quad , \quad dutyCycle = \frac{t_p}{T}$$

Figure 31-16. PWP Capture

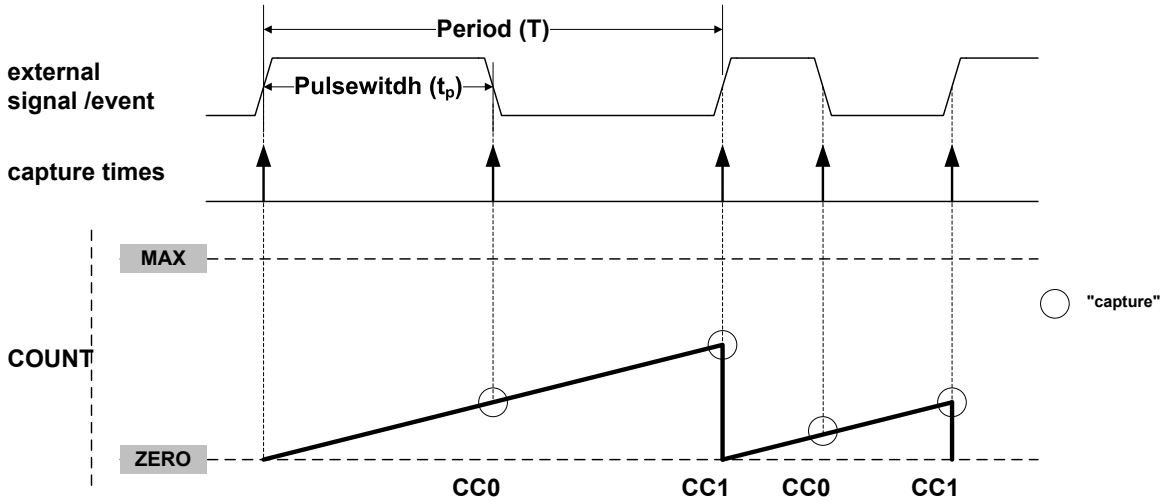

Selecting PWP or PPW in the Timer/Counter Event Input 1 Action bit group in the Event Control register (EVCTRL.EVACT1) enables the TCC to perform one capture action on the rising edge and the other one on the falling edge. When using PPW (period and pulse-width) event action, period *T* will be captured into CC0 and the pulse-width t_p into CC1. The PWP (Pulse-width and Period) event action offers the same functionality, but *T* will be captured into CC1 and t_p into CC0.

The Timer/Counter Event x Invert Enable bit in Event Control register (EVCTRL.TCEINVx) is used for event source x to select whether the wraparound should occur on the rising edge or the falling edge. If EVCTRL.TCEINVx=1, the wraparound will happen on the falling edge.

The corresponding capture is done only if the channel is enabled in capture mode (CTRLA.CPTENx=1). If not, the capture action will be ignored and the channel will be enabled in compare mode of operation. When only one of these channel is required, the other channel can be used for other purposes.

Downloaded from Arrow.com.

The TCC can detect capture overflow of the input capture channels: When a new capture event is detected while the INTFLAG.MCx is still set, the new timestamp will not be stored and INTFLAG.ERR will be set.

Note: When up-counting (CTRLBSET.DIR=0), counter values lower than 1 cannot be captured in Capture Minimum mode (FCTRLn.CAPTURE=CAPTMIN). To capture the full range including value 0, the TCC must be configured in down-counting mode (CTRLBSET.DIR=0).

Note: In dual-slope PWM operation, and when TOP is lower than MAX/2, the CCx MSB captures the CTRLB.DIR state to identify the ramp on which the capture has been done. For rising ramps CCx[MSB] is zero, for falling ramps CCx[MSB]=1.

31.6.3 Additional Features

31.6.3.1 One-Shot Operation

When one-shot is enabled, the counter automatically stops on the next counter overflow or underflow condition. When the counter is stopped, the Stop bit in the Status register (STATUS.STOP) is set and the waveform outputs are set to the value defined by DRVCTRL.NREx and DRVCTRL.NRVx.

One-shot operation can be enabled by writing a '1' to the One-Shot bit in the Control B Set register (CTRLBSET.ONESHOT) and disabled by writing a '1' to CTRLBCLR.ONESHOT. When enabled, the TCC will count until an overflow or underflow occurs and stop counting. The one-shot operation can be restarted by a re-trigger software command, a re-trigger event or a start event. When the counter restarts its operation, STATUS.STOP is automatically cleared.

31.6.3.2 Circular Buffer

The Period register (PER) and the compare channels register (CC0 to CC3) support circular buffer operation. When circular buffer operation is enabled, the PER or CCx values are copied into the corresponding buffer registers at each update condition. Circular buffering is dedicated to RAMP2, RAMP2A, and DSBOTH operations.

Figure 31-17. Circular Buffer on Channel 0

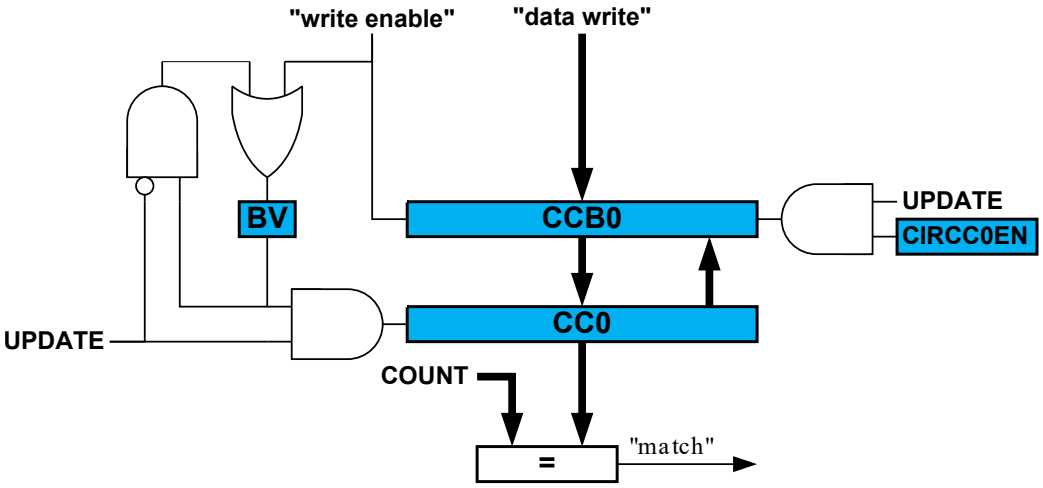

31.6.3.3 Dithering Operation

The TCC supports dithering on Pulse-width or Period on a 16, 32 or 64 PWM cycles frame.

Dithering consists in adding some extra clocks cycles in a frame of several PWM cycles, and can improve the accuracy of the *average* output pulse width and period. The extra clock cycles are added on some of the compare match signals, one at a time, through a "blue noise" process that minimizes the flickering on the resulting dither patterns.

Dithering is enabled by writing the corresponding configuration in the Enhanced Resolution bits in CTRLA register (CTRLA.RESOLUTION):

- DITH4 enable dithering every 16 PWM frames
- DITH5 enable dithering every 32 PWM frames
- DITH6 enable dithering every 64 PWM frames

Downloaded from Arrow.com.

The DITHERCY bits of COUNT, PER and CCx define the number of extra cycles to add into the frame (DITHERCY bits from the respective COUNT, PER or CCx registers). The remaining bits of COUNT, PER, CCx define the compare value itself.

The pseudo code, giving the extra cycles insertion regarding the cycle is:

```
int extra_cycle(resolution, dithercy, cycle){
  int MASK;
  int value
  switch (resolution){
    DITH4: MASK = 0x0f;
    DITH5: MASK = 0x1f;
    DITH6: MASK = 0x3f;
  }
  value = cycle * dithercy;
  if (((MASK & value) + dithercy) > MASK)
    return 1;
 return 0;
}
```

Dithering on Period

Writing DITHERCY in PER will lead to an average PWM period configured by the following formulas.

DITH4 mode:

$$PwmPeriod = \left(\frac{\mathrm{DITHERCY}}{16} + \mathrm{PER}\right)\left(\frac{1}{f_{\mathrm{GCLK_TCC}}}\right)$$

Note: If DITH4 mode is enabled, the last 4 significant bits from PER/CCx or COUNT register correspond to the DITHERCY value, rest of the bits corresponds to PER/CCx or COUNT value.

DITH5 mode:

$$PwmPeriod = \left(\frac{\mathrm{DITHERCY}}{32} + \mathrm{PER}\right)\left(\frac{1}{f_{\mathrm{GCLK_TCC}}}\right)$$

DITH6 mode:

$$PwmPeriod = \left(\frac{\mathrm{DITHERCY}}{64} + \mathrm{PER}\right)\left(\frac{1}{f_{\mathrm{GCLK_TCC}}}\right)$$

Dithering on Pulse Width

Writing DITHERCY in CCx will lead to an average PWM pulse width configured by the following formula.

DITH4 mode:

$$PwmPulseWidth = \left(\frac{\mathrm{DITHERCY}}{16} + \mathrm{CCx}\right)\left(\frac{1}{f_{\mathrm{GCLK_TCC}}}\right)$$

DITH5 mode:

$$PwmPulseWidth = \left(\frac{\mathrm{DITHERCY}}{32} + \mathrm{CCx}\right)\left(\frac{1}{f_{\mathrm{GCLK_TCC}}}\right)$$

DITH6 mode:

$$PwmPulseWidth = \left(\frac{\mathrm{DITHERCY}}{64} + \mathrm{CCx}\right)\left(\frac{1}{f_{\mathrm{GCLK_TCC}}}\right)$$

Note: The PWM period will remain static in this case.

31.6.3.4 Ramp Operations

Three ramp operation modes are supported. All of them require the timer/counter running in single-slope PWM generation. The ramp mode is selected by writing to the Ramp Mode bits in the Waveform Control register (WAVE.RAMP).

Downloaded from Arrow.com.

RAMP1 Operation

This is the default PWM operation, described in Single-Slope PWM Generation.

RAMP2 Operation

These operation modes are dedicated for power factor correction (PFC), Half-Bridge and Push-Pull SMPS topologies, where two consecutive timer/counter cycles are interleaved, see Figure 31-18. In cycle A, odd channel output is disabled, and in cycle B, even channel output is disabled. The ramp index changes after each update, but can be software modified using the Ramp index command bits in Control B Set register (CTRLBSET.IDXCMD).

Standard RAMP2 (RAMP2) Operation

Ramp A and B periods are controlled by the PER register value. The PER value can be different on each ramp by the Circular Period buffer option in the Wave register (WAVE.CIPEREN=1). This mode uses a two-channel TCC to generate two output signals, or one output signal with another CC channel enabled in capture mode.

Figure 31-18. RAMP2 Standard Operation

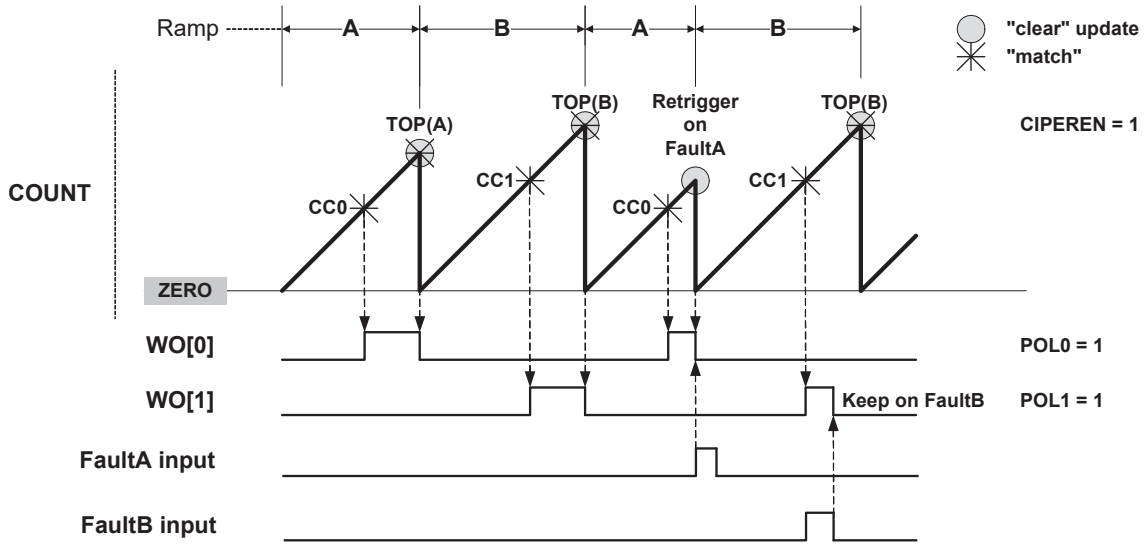

Alternate RAMP2 (RAMP2A) Operation

Alternate RAMP2 operation is similar to RAMP2, but CC0 controls both WO[0] and WO[1] waveforms when the corresponding circular buffer option is enabled (CIPEREN=1). The waveform polarity is the same on both outputs. Channel 1 can be used in capture mode.

Downloaded from Arrow.com.

Figure 31-19. RAMP2 Alternate Operation

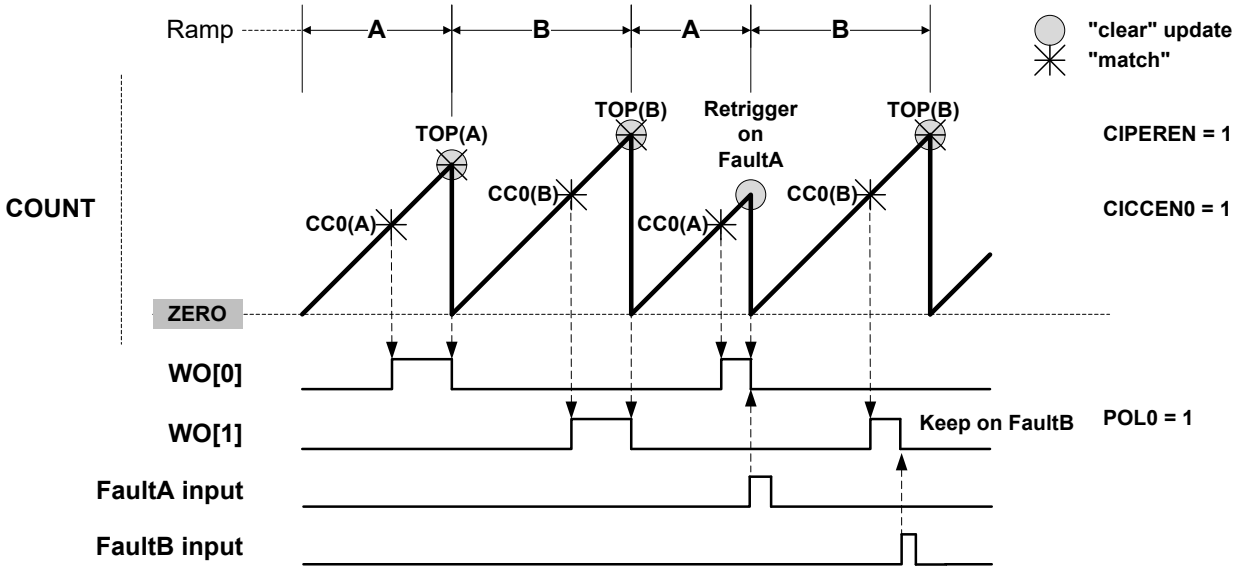

Critical RAMP2 (RAMP2C) Operation

Critical RAMP2 operation provides a way to cover RAMP2 operation requirements without the update constraint associated with the use of circular buffers. In this mode, CC0 is controlling the period of ramp A and PER is controlling the period of ramp B. When using more than two channels, WO[0] output is controlled by CC2 (HIGH) and CC0 (LOW). On TCC with 2 channels, a pulse on WO[0] will last the entire period of ramp A, if WAVE.POL0=0.

Figure 31-20. RAMP2 Critical Operation With More Than 2 Channels

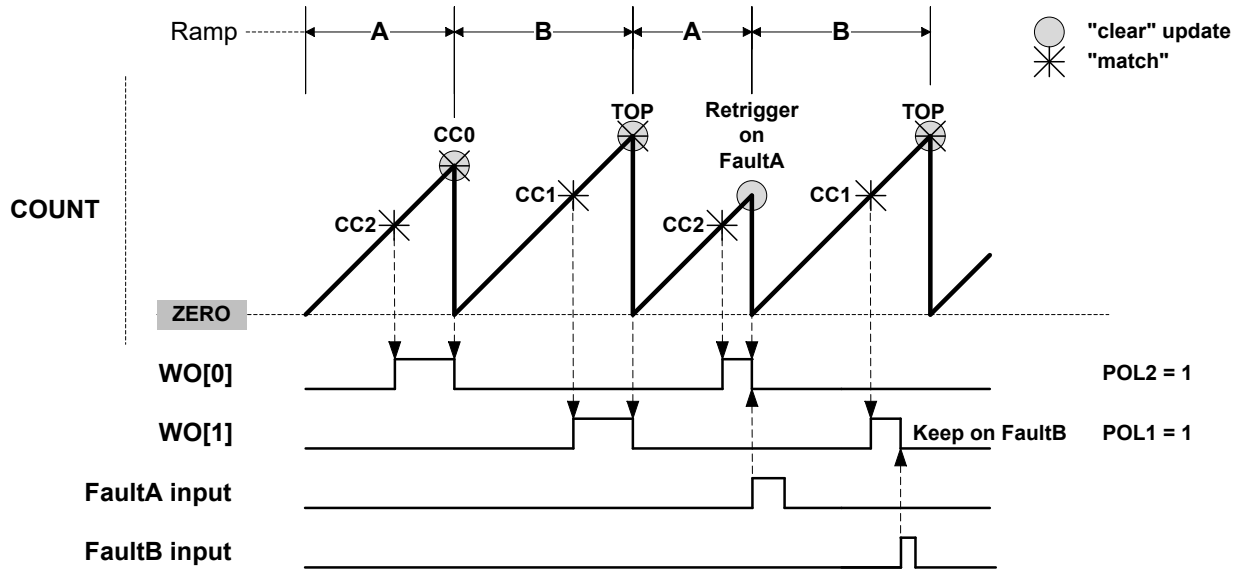

Downloaded from Arrow.com.

Figure 31-21. RAMP2 Critical Operation With 2 Channels

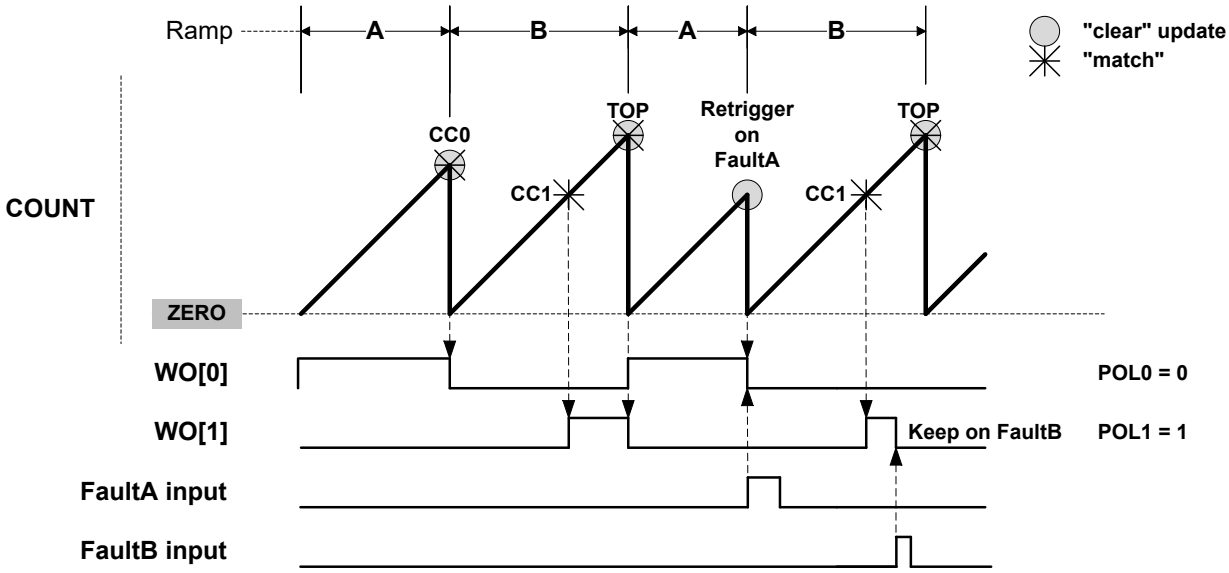

31.6.3.5 Recoverable Faults

Recoverable faults can restart or halt the timer/counter. Two faults, called Fault A and Fault B, can trigger recoverable fault actions on the compare channels CC0 and CC1 of the TCC. The compare channels' outputs can be clamped to inactive state either as long as the fault condition is present, or from the first valid fault condition detection on until the end of the timer/counter cycle.

Fault Inputs

The first two channel input events (TCCxMC0 and TCCxMC1) can be used as Fault A and Fault B inputs, respectively. Event system channels connected to these fault inputs must be configured as asynchronous. The TCC must work in a PWM mode.

Fault Filtering

There are three filters available for each input Fault A and Fault B. They are configured by the corresponding Recoverable Fault n Configuration registers (FCTRLA and FCTRLB). The three filters can either be used independently or in any combination.

Input Filtering

By default, the event detection is asynchronous. When the event occurs, the fault system will immediately and asynchronously perform the selected fault action on the compare channel output, also in device power modes where the clock is not available. To avoid false fault detection on external events (e.g. due to a glitch on an I/O port) a digital filter can be enabled and configured by the Fault B Filter Value bits in the Fault n Configuration registers (FCTRLn.FILTERVAL). If the event width is less than FILTERVAL (in clock cycles), the event will be discarded. A valid event will be delayed by FILTERVAL clock cycles.

Fault Blanking

This ignores any fault input for a certain time just after a selected waveform output edge. This can be used to prevent false fault triggering due to signal bouncing, as shown in the figure below. Blanking can be enabled by writing an edge triggering configuration to the Fault n Blanking Mode bits in the Recoverable Fault n Configuration register (FCTRLn.BLANK). The desired duration of the blanking must be written to the Fault n Blanking Time bits (FCTRLn.BLANKVAL).
The blanking time $t_b$is calculated by

$$t_b = \frac{1 + \mathrm{BLANKVAL}}{f_{\mathrm{GCLK_TCCx_PRESC}}}$$

Here, $f_{\mathrm{GCLK_TCCx_PRESC}}$ is the frequency of the prescaled peripheral clock frequency $f_{\mathrm{GCLK_TCCx}}$.

Downloaded from Arrow.com.

The maximum blanking time (FCTRLn.BLANKVAL=
255) at f_{GCLK_TCCx}=96MHz is 2.67µs (no prescaler) or 170µs (prescaling). For f_{GCLK_TCCx}=1MHz, the maximum blanking time is either 170µs (no prescaling) or 10.9ms (prescaling enabled).

Figure 31-22. Fault Blanking in RAMP1 Operation with Inverted Polarity

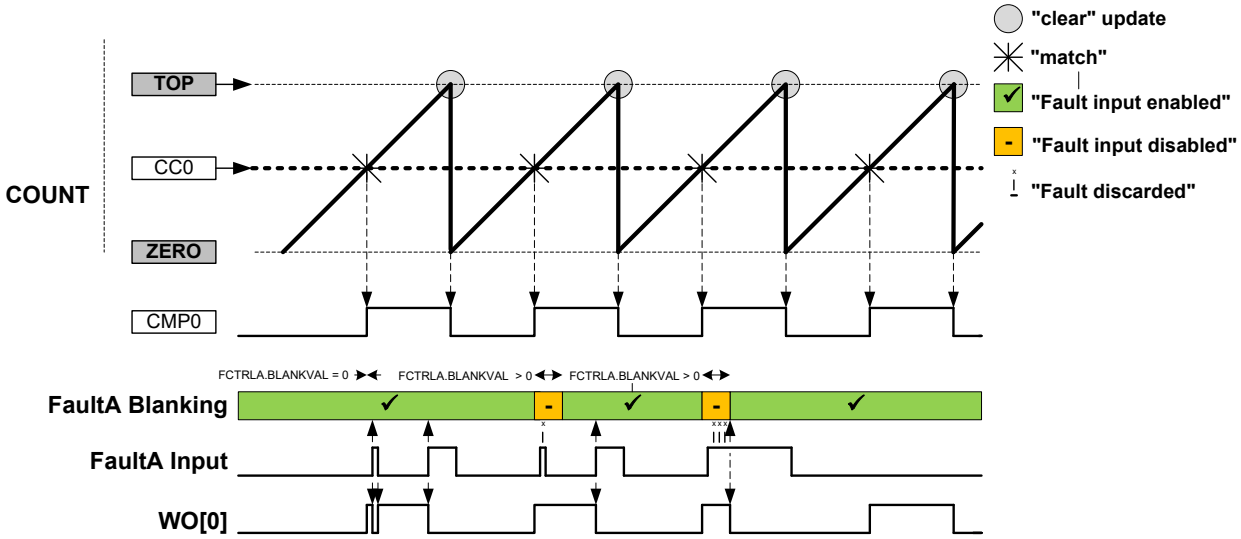

Fault Qualification

This is enabled by writing a '1' to the Fault n Qualification bit in the Recoverable Fault n Configuration register (FCTRLn.QUAL). When the recoverable fault qualification is enabled (FCTRLn.QUAL=1), the fault input is disabled all the time the corresponding channel output has an inactive level, as shown in the figures below.

Figure 31-23. Fault Qualification in RAMP1 Operation

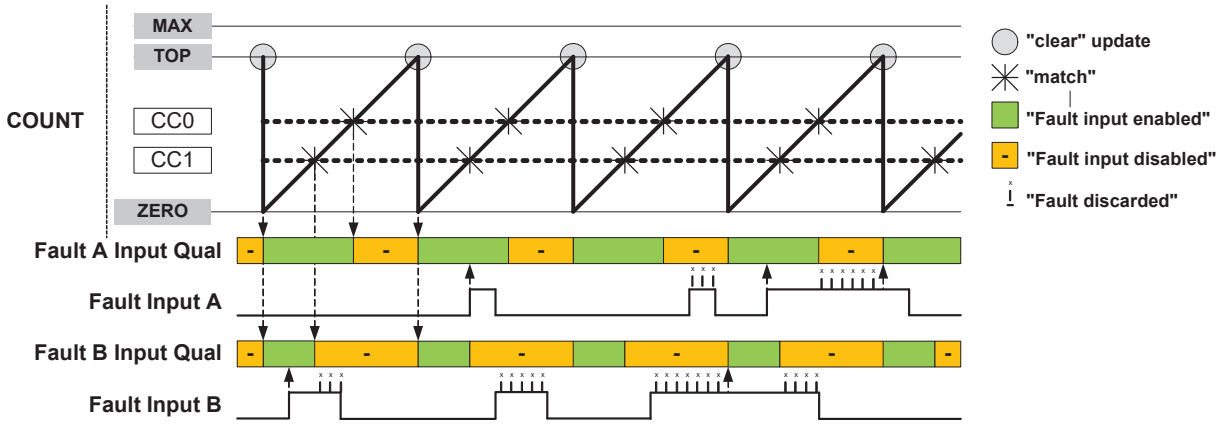

Downloaded from Arrow.com.

Figure 31-24. Fault Qualification in RAMP2 Operation with Inverted Polarity

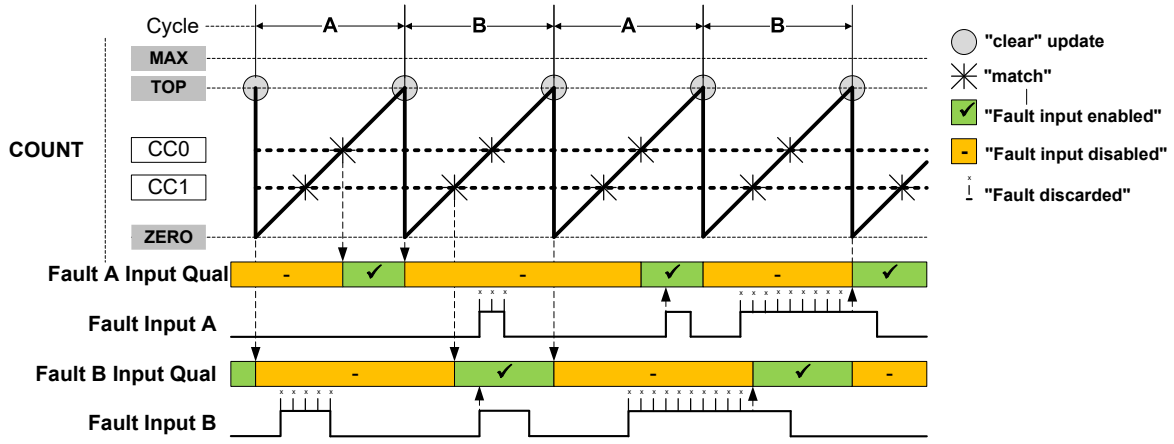

Fault Actions

Different fault actions can be configured individually for Fault A and Fault B. Most fault actions are not mutually exclusive; hence two or more actions can be enabled at the same time to achieve a result that is a combination of fault actions.

Keep Action This is enabled by writing the Fault n Keeper bit in the Recoverable Fault n Configuration register (FCTRLn.KEEP) to '1'. When enabled, the corresponding channel output will be clamped to zero as long as the fault condition is present. The clamp will be released on the start of the first cycle after the fault condition is no longer present, see next Figure.

Figure 31-25. Waveform Generation with Fault Qualification and Keep Action

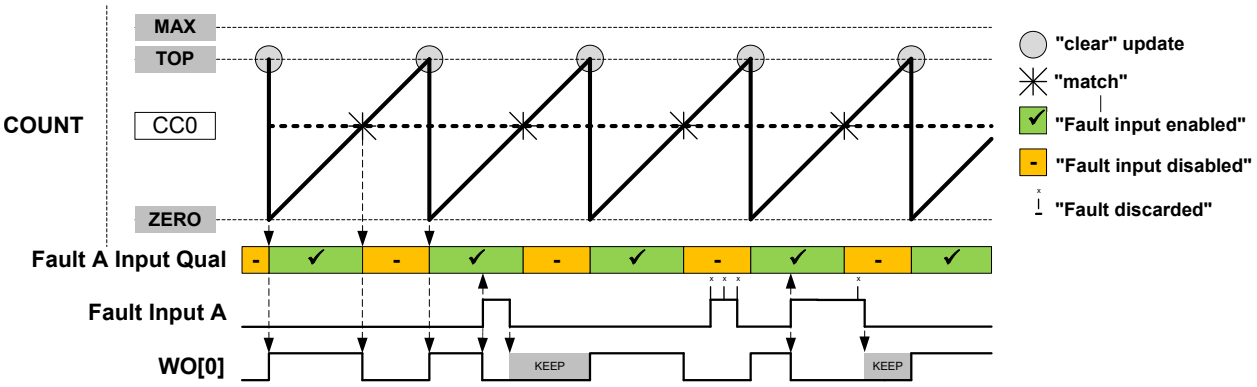

Restart Action This is enabled by writing the Fault n Restart bit in Recoverable Fault n Configuration register (FCTRLn.RESTART) to '1'. When enabled, the timer/counter will be restarted as soon as the corresponding fault condition is present. The ongoing cycle is stopped and the timer/counter starts a new cycle, see Figure 31-26. In Ramp 1 mode, when the new cycle starts, the compare outputs will be clamped to inactive level as long as the fault condition is present.

Note: For RAMP2 operation, when a new timer/counter cycle starts the cycle index will change automatically, see Figure 31-27. Fault A and Fault B are qualified only during the cycle A and cycle B respectively: Fault A is disabled during cycle B, and Fault B is disabled during cycle A.

Downloaded from Arrow.com.

Figure 31-26. Waveform Generation in RAMP1 mode with Restart Action

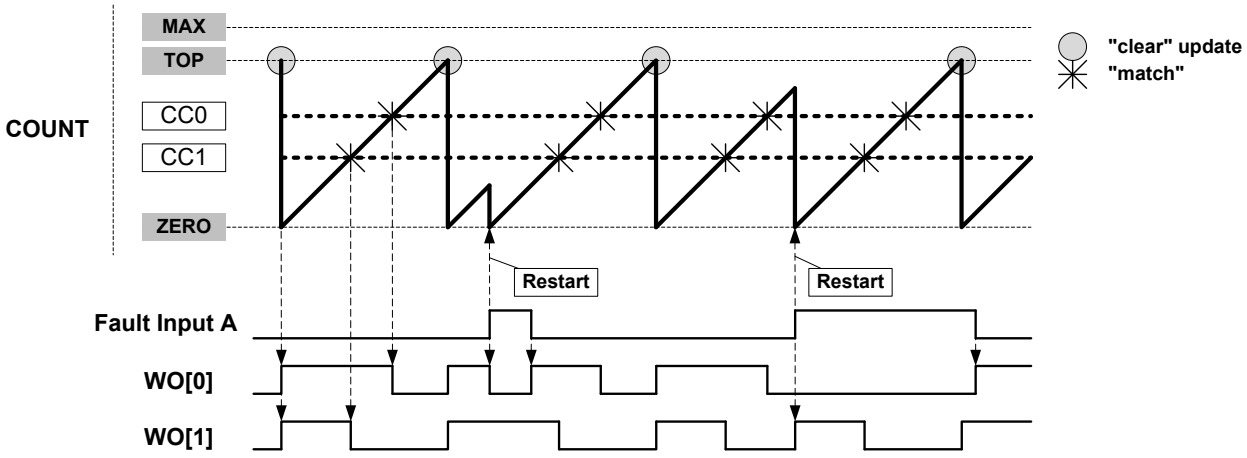

Figure 31-27. Waveform Generation in RAMP2 mode with Restart Action

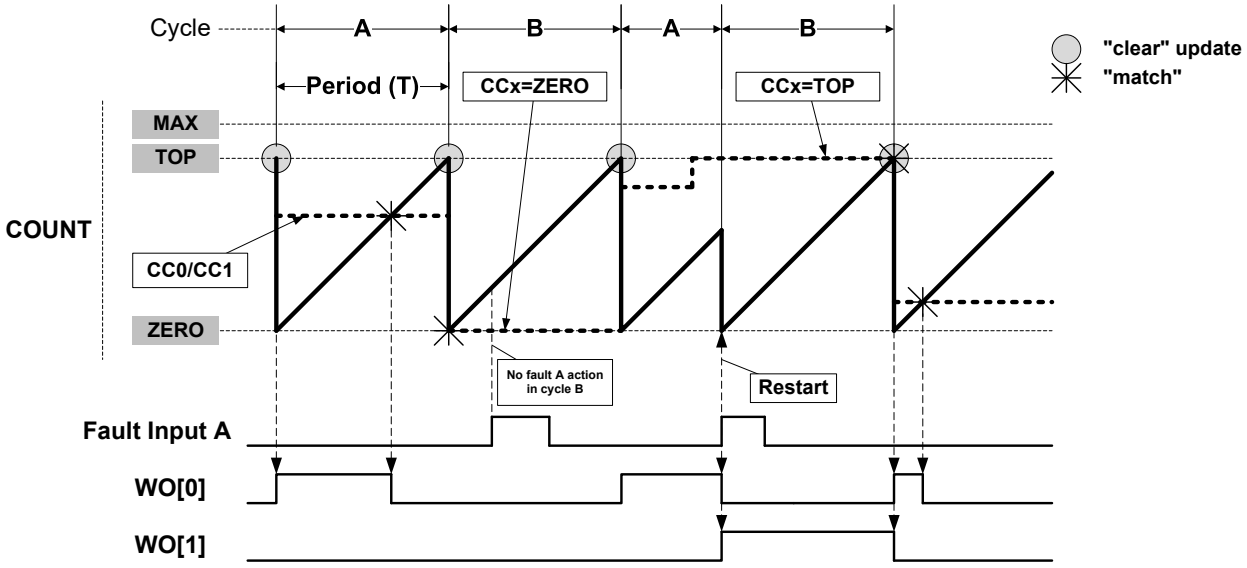

Capture Action

Several capture actions can be selected by writing the Fault n Capture Action bits in the Fault n Control register (FCTRLn.CAPTURE). When one of the capture operations is selected, the counter value is captured when the fault occurs. These capture operations are available:

- CAPT - the equivalent to a standard capture operation, for further details refer to 31.6.2.7 Capture Operations
- CAPTMIN - gets the minimum time stamped value: on each new local minimum captured value, an event or interrupt is issued.
- CAPTMAX - gets the maximum time stamped value: on each new local maximum captured value, an event or interrupt (IT) is issued, see Figure 31-28.
- LOCMIN - notifies by event or interrupt when a local minimum captured value is detected.
- LOCMAX - notifies by event or interrupt when a local maximum captured value is detected.
- DERIV0 - notifies by event or interrupt when a local extreme captured value is detected, see Figure 31-29.

CCx Content:

In CAPTMIN and CAPTMAX operations, CCx keeps the respective extremum captured values, see Figure 31-28. In LOCMIN, LOCMAX or DERIV0 operation, CCx follows the counter value at fault time, see Figure 31-29.

Downloaded from Arrow.com.

Before enabling CAPTMIN or CAPTMAX mode of capture, the user must initialize the corresponding CCx register value to a value different from zero (for CAPTMIN) top (for CAPTMAX). If the CCx register initial value is zero (for CAPTMIN) top (for CAPTMAX), no captures will be performed using the corresponding channel.

MCx Behaviour:

In LOCMIN and LOCMAX operation, capture is performed on each capture event. The MCx interrupt flag is set only when the captured value is above or equal (for LOCMIN) or below or equal (for LOCMAX) to the previous captured value. So interrupt flag is set when a new relative local Minimum (for CAPTMIN) or Maximum (for CAPTMAX) value has been detected. DERIV0 is equivalent to an OR function of (LOCMIN, LOCMAX).

In CAPT operation, capture is performed on each capture event. The MCx interrupt flag is set on each new capture.

In CAPTMIN and CAPTMAX operation, capture is performed only when on capture event time, the counter value is lower (for CAPTMIN) or higher (for CAPMAX) than the last captured value. The MCx interrupt flag is set only when on capture event time, the counter value is higher or equal (for CAPTMIN) or lower or equal (for CAPTMAX) to the value captured on the previous event. So interrupt flag is set when a new absolute local Minimum (for CAPTMIN) or Maximum (for CAPTMAX) value has been detected.

Interrupt Generation

In CAPT mode, an interrupt is generated on each filtered Fault n and each dedicated CCx channel capture counter value. In other modes, an interrupt is only generated on an extreme captured value.

Figure 31-28. Capture Action “CAPTMAX”

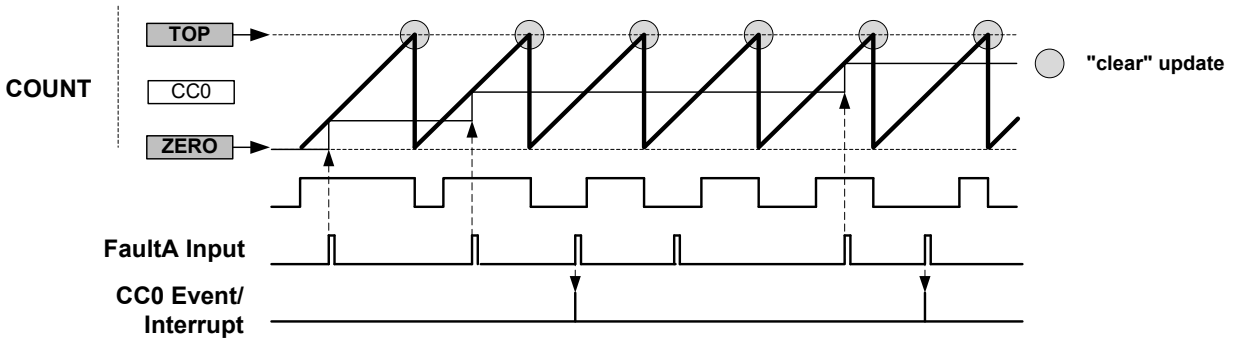

Figure 31-29. Capture Action “DERIV0”

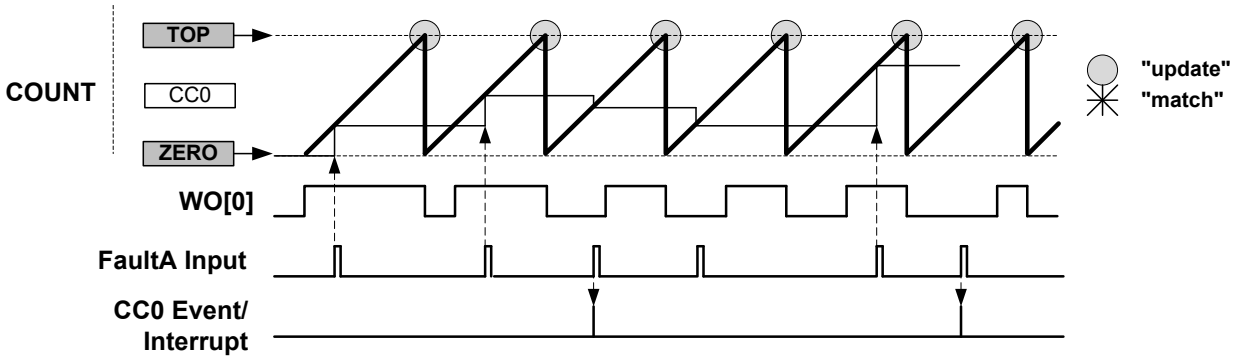

Hardware Halt Action

This is configured by writing 0x1 to the Fault n Halt mode bits in the Recoverable Fault n Configuration register (FCTRLn.HALT). When enabled, the timer/counter is halted and the cycle is extended as long as the corresponding fault is present.

The next figure ('Waveform Generation with Halt and Restart Actions') shows an example where both restart action and hardware halt action are enabled for Fault A. The compare channel 0 output

Downloaded from Arrow.com.

is clamped to inactive level as long as the timer/counter is halted. The timer/counter resumes the counting operation as soon as the fault condition is no longer present. As the restart action is enabled in this example, the timer/counter is restarted after the fault condition is no longer present.

The figure after that ('Waveform Generation with Fault Qualification, Halt, and Restart Actions') shows a similar example, but with additionally enabled fault qualification. Here, counting is resumed after the fault condition is no longer present.

Note that in RAMP2 and RAMP2A operations, when a new timer/counter cycle starts, the cycle index will automatically change.

Figure 31-30. Waveform Generation with Halt and Restart Actions

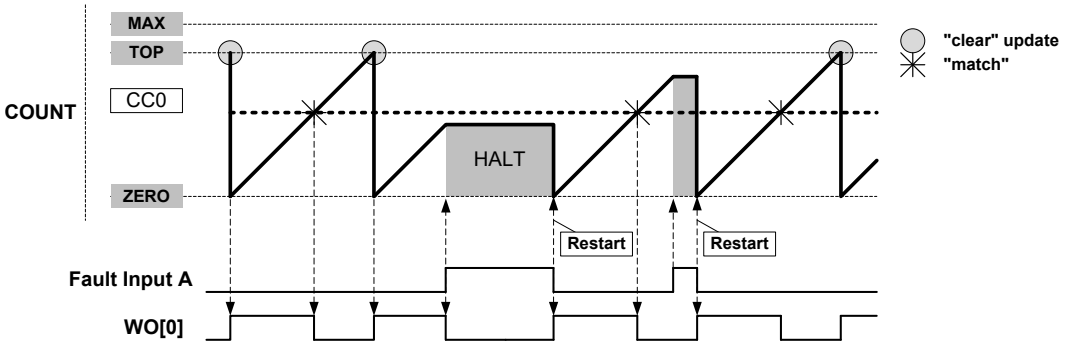

Figure 31-31. Waveform Generation with Fault Qualification, Halt, and Restart Actions

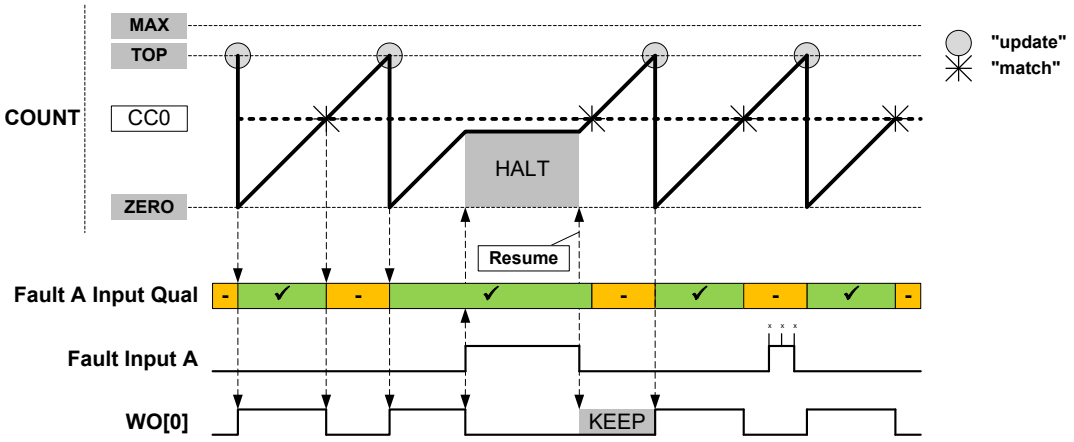

Software Halt Action

This is configured by writing 0x2 to the Fault n Halt mode bits in the Recoverable Fault n configuration register (FCTRLn.HALT). Software halt action is similar to hardware halt action, but in order to restart the timer/counter, the corresponding fault condition must not be present anymore, and the corresponding FAULT n bit in the STATUS register must be cleared by software.

Downloaded from Arrow.com.

Figure 31-32. Waveform Generation with Software Halt, Fault Qualification, Keep and Restart Actions

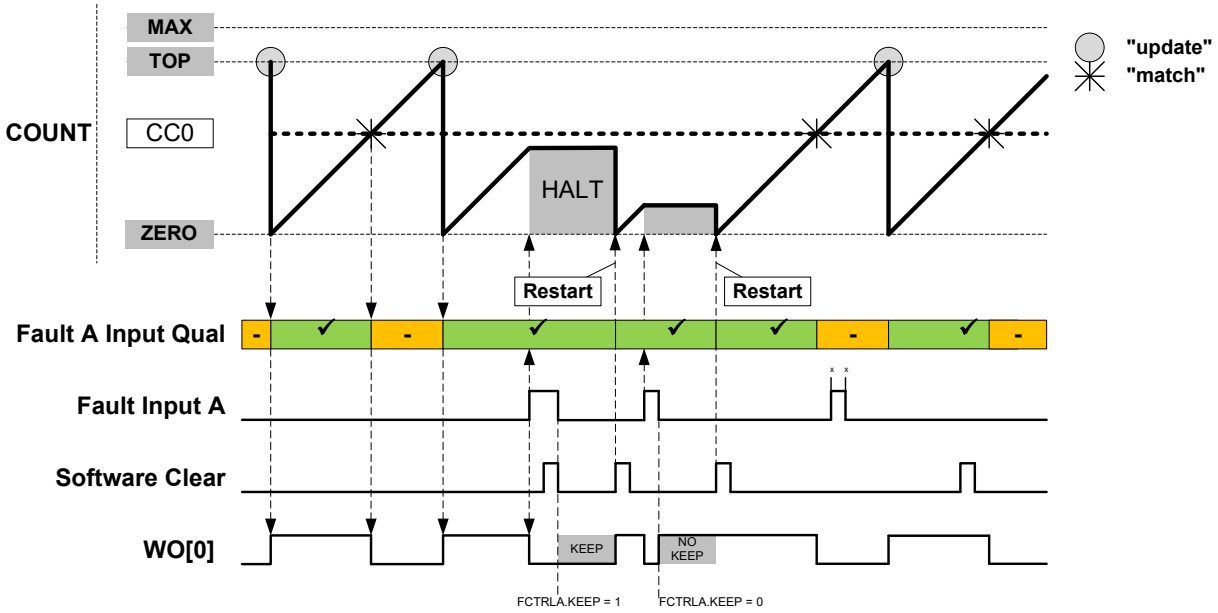

31.6.3.6 Non-Recoverable Faults

The non-recoverable fault action will force all the compare outputs to a pre-defined level programmed into the Driver Control register (DRVCTRL.NRE and DRVCTRL.NRV). The non-recoverable fault input (EV0 and EV1) actions are enabled in Event Control register (EVCTRL.EVACT0 and EVCTRL.EVACT1).

To avoid false fault detection on external events (e.g. a glitch on an I/O port) a digital filter can be enabled using Non-Recoverable Fault Input x Filter Value bits in the Driver Control register (DRVCTRL.FILTERVALn). Therefore, the event detection is synchronous, and event action is delayed by the selected digital filter value clock cycles.

When the Fault Detection on Debug Break Detection bit in Debug Control register (DGBCTRL.FDDBD) is written to '1', a non-recoverable Debug Faults State and an interrupt (DFS) is generated when the system goes in debug operation.

In RAMP2, RAMP2A, or DSBOTH operation, when the Lock Update bit in the Control B register is set by writing CTRLBSET.LUPD=1 and the ramp index or counter direction changes, a non-recoverable Update Fault State and the respective interrupt (UFS) are generated.

31.6.3.7 Waveform Extension

Figure 31-33 shows a schematic diagram of actions of the four optional units that follow the recoverable fault stage on a port pin pair: Output Matrix (OTMX), Dead-Time Insertion (DTI), SWAP and Pattern Generation. The DTI and SWAP units can be seen as a four port pair slices:

- Slice 0 DTI0 / SWAP0 acting on port pins (WO[0], WO[WO_NUM/2 +0])
- Slice 1 DTI1 / SWAP1 acting on port pins (WO[1], WO[WO_NUM/2 +1])

And more generally:

- Slice n DTIx / SWAPx acting on port pins (WO[x], WO[WO_NUM/2 +x])

Downloaded from Arrow.com.

Figure 31-33. Waveform Extension Stage Details

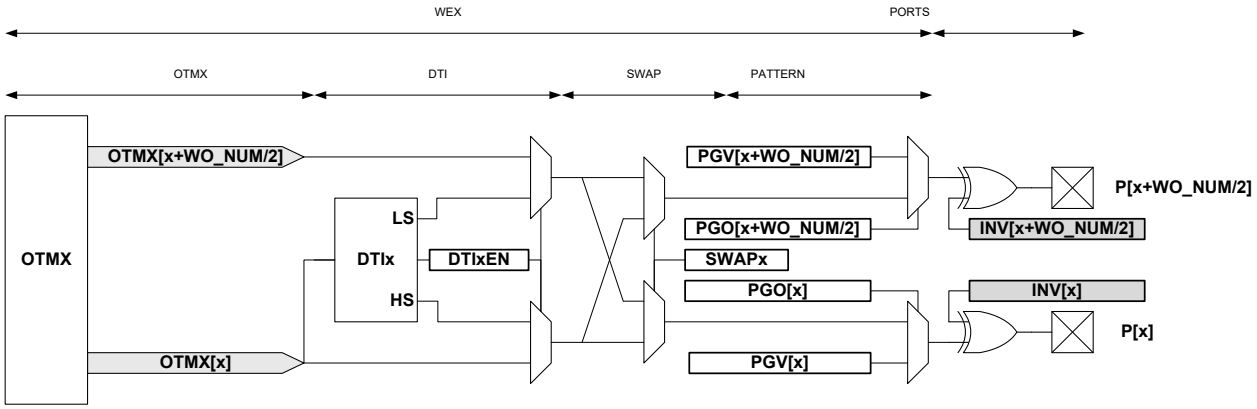

The output matrix (OTMX) unit distributes compare channels, according to the selectable configurations in Table 31-4.

Table 31-4. Output Matrix Channel Pin Routing Configuration

Value	OTMX[x]							
0x0	CC3	CC2	CC1	CC0	CC3	CC2	CC1	CC0
0x1	CC1	CC0	CC1	CC0	CC1	CC0	CC1	CC0
0x2	CC0	CC0	CC0	CC0	CC0	CC0	CC0	CC0
0x3	CC1	CC1	CC1	CC1	CC1	CC1	CC1	CC0

Notes on Table 31-4:

- Configuration 0x0 is the default configuration. The channel location is the default one, and channels are distributed on outputs modulo the number of channels. Channel 0 is routed to the Output matrix output OTMX[0], and Channel 1 to OTMX[1]. If there are more outputs than channels, then channel 0 is duplicated to the Output matrix output OTMX[CC_NUM], channel 1 to OTMX[CC_NUM+1] and so on.
- Configuration 0x1 distributes the channels on output modulo half the number of channels. This assigns twice the number of output locations to the lower channels than the default configuration. This can be used, for example, to control the four transistors of a full bridge using only two compare channels.
  Using pattern generation, some of these four outputs can be overwritten by a constant level, enabling flexible drive of a full bridge in all quadrant configurations.
- Configuration 0x2 distributes compare channel 0 (CC0) to all port pins. With pattern generation, this configuration can control a stepper motor.
- Configuration 0x3 distributes the compare channel CC0 to the first output, and the channel CC1 to all other outputs. Together with pattern generation and the fault extension, this configuration can control up to seven LED strings, with a boost stage.

Table 31-5. Example: four compare channels on four outputs

Value	OTMX[3]	OTMX[2]	OTMX[1]	OTMX[0]
0x0	CC3	CC2	CC1	CC0
0x1	CC1	CC0	CC1	CC0
0x2	CC0	CC0	CC0	CC0
0x3	CC1	CC1	CC1	CC0

The dead-time insertion (DTI) unit generates OFF time with the non-inverted low side (LS) and inverted high side (HS) of the wave generator output forced at low level. This OFF time is called dead time. Dead-time insertion ensures that the LS and HS will never switch simultaneously.

Downloaded from Arrow.com.

The DTI stage consists of four equal dead-time insertion generators; one for each of the first four compare channels. Figure 31-34 shows the block diagram of one DTI generator. The four channels have a common register which controls the dead time, which is independent of high side and low side setting.

Figure 31-34. Dead-Time Generator Block Diagram

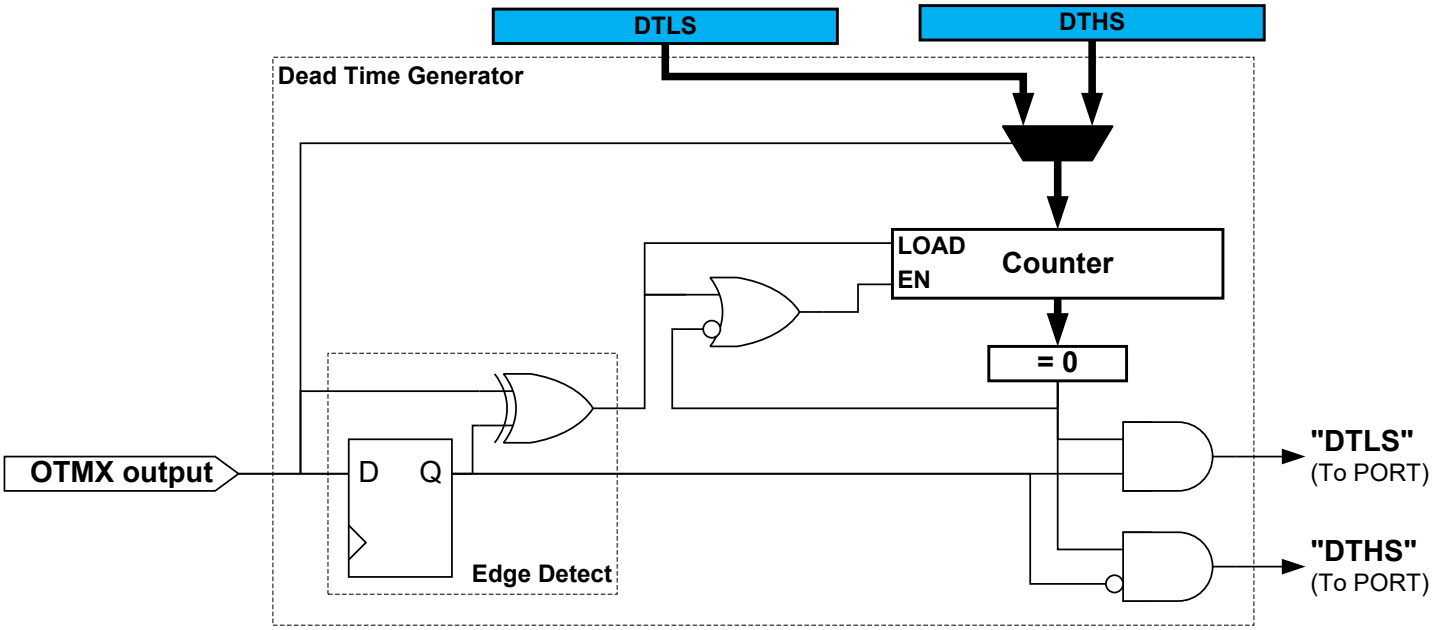

As shown in Figure 31-35, the 8-bit dead-time counter is decremented by one for each peripheral clock cycle until it reaches zero. A non-zero counter value will force both the low side and high side outputs into their OFF state. When the output matrix (OTMX) output changes, the dead-time counter is reloaded according to the edge of the input. When the output changes from low to high (positive edge) it initiates a counter reload of the DTLS register. When the output changes from high to low (negative edge) it reloads the DTHS register.

Figure 31-35. Dead-Time Generator Timing Diagram

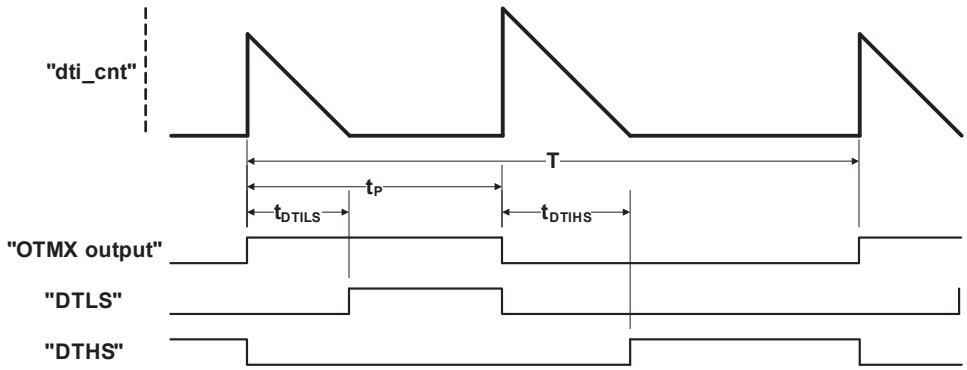

The pattern generator unit produces a synchronized bit pattern across the port pins it is connected to. The pattern generation features are primarily intended for handling the commutation sequence in brushless DC motors (BLDC), stepper motors, and full bridge control. See also Figure 31-36.

Downloaded from Arrow.com.

Figure 31-36. Pattern Generator Block Diagram

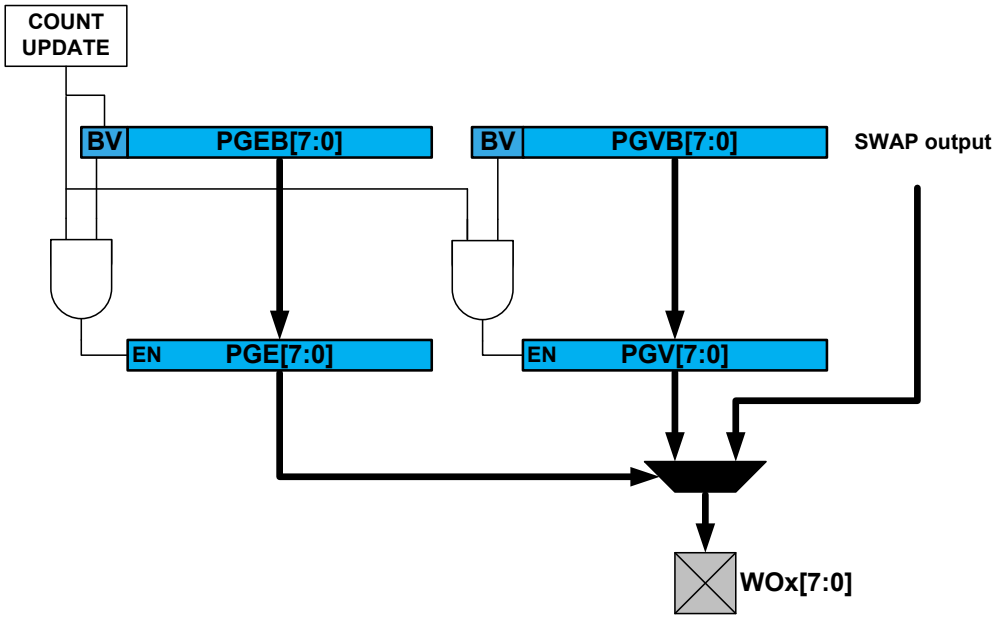

As with other double-buffered timer/counter registers, the register update is synchronized to the UPDATE condition set by the timer/counter waveform generation operation. If synchronization is not required by the application, the software can simply access directly the PATT.PGE, PATT.PGV bits registers.

31.6.4 DMA, Interrupts, and Events

Table 31-6. Module Requests for TCC

Condition	Interrupt request	Event output	Event input	DMA request	DMA request is cleared
Overflow / Underflow	Yes	Yes		Yes(1)	On DMA acknowledge
Channel Compare Match or Capture	Yes	Yes	Yes(2)	Yes(3)	For circular buffering: on DMA acknowledge For capture channel: when CCx register is read
Retrigger	Yes	Yes			
Count	Yes	Yes			
Capture Overflow Error	Yes				
Debug Fault State	Yes				
Recoverable Faults	Yes				
Non-Recoverable Faults	Yes				
TCCx Event 0 input			Yes(4)		
TCCx Event 1 input			Yes(5)		

Notes:
1. DMA request set on overflow, underflow or re-trigger conditions.
2. Can perform capture or generate recoverable fault on an event input.
3. In capture or circular modes.
4. On event input, either action can be executed:

Downloaded from Arrow.com.

- re-trigger counter
- control counter direction
- stop the counter
- decrement the counter
- perform period and pulse width capture
- generate non-recoverable fault

5. On event input, either action can be executed:
   - re-trigger counter
   - increment or decrement counter depending on direction
   - start the counter
   - increment or decrement counter based on direction
   - increment counter regardless of direction
   - generate non-recoverable fault

31.6.4.1 DMA Operation

The TCC can generate the following DMA requests:

Counter overflow (OVF)	The TCC generates a DMA request on each cycle when an update condition (Overflow, Underflow or Re-trigger) is detected. In both cases, the request is cleared by hardware on DMA acknowledge.
Channel Match (MCx)	A DMA request is set only on a compare match . The request is cleared by hardware on DMA acknowledge.
Channel Capture (MCx)	For a capture channel, the request is set when valid data is present in the CCx register, and cleared once the CCx register is read.

DMA Operation with Circular Buffer

When circular buffer operation is enabled, the Buffer registers must be written in a correct order and synchronized to the update times of the timer. The DMA triggers of the TCC provide a way to ensure a safe and correct update of circular buffers.

Note: Circular buffer are intended to be used with RAMP2, RAMP2A and DSBOTH operation only.

DMA Operation with Circular Buffer in RAMP2 and RAMP2A Mode

When a CCx channel is selected as a circular buffer, the related DMA request is not set on a compare match detection, but on start of ramp B.

If at least one circular buffer is enabled, the DMA overflow request is conditioned to the start of ramp A with an effective DMA transfer on previous ramp B (DMA acknowledge).

The update of all circular buffer values for ramp A can be done through a DMA channel triggered on a MC trigger. The update of all circular buffer values for ramp B, can be done through a second DMA channel triggered by the overflow DMA request.

Downloaded from Arrow.com.

Figure 31-37. DMA Triggers in RAMP and RAMP2 Operation Mode and Circular Buffer Enabled

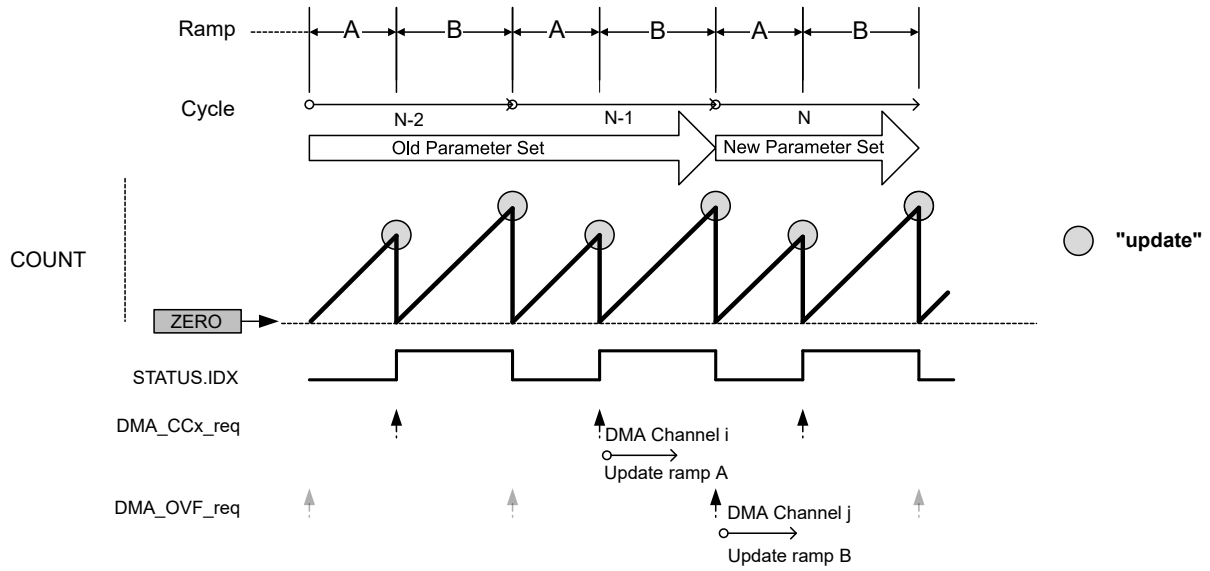

DMA Operation with Circular Buffer in DSBOTH Mode
When a CC channel is selected as a circular buffer, the related DMA request is not set on a compare match detection, but on start of down-counting phase.

If at least one circular buffer is enabled, the DMA overflow request is conditioned to the start of up-counting phase with an effective DMA transfer on previous down-counting phase (DMA acknowledge).

When up-counting, all circular buffer values can be updated through a DMA channel triggered by MC trigger. When down-counting, all circular buffer values can be updated through a second DMA channel, triggered by the OVF DMA request.

Figure 31-38. DMA Triggers in DSBOTH Operation Mode and Circular Buffer Enabled

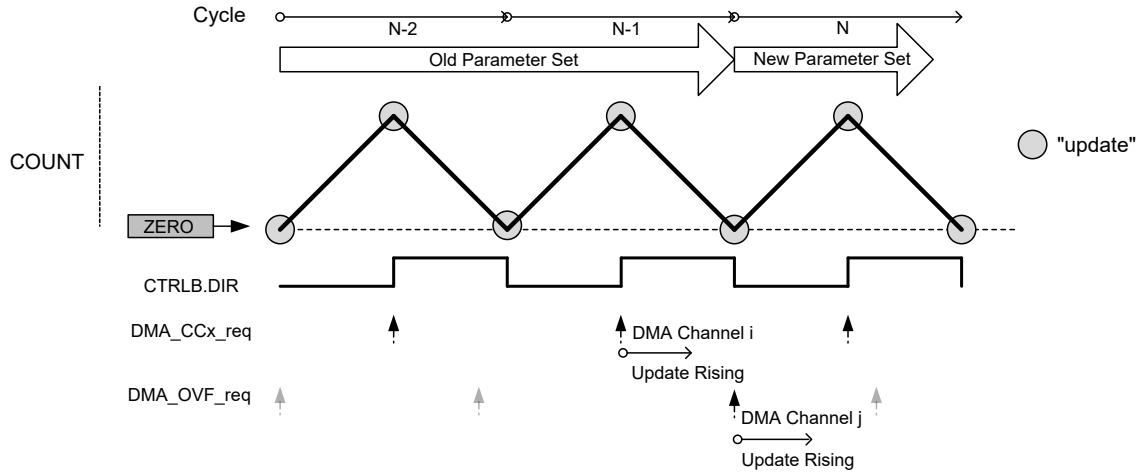

31.6.4.2 Interrupts

The TCC has the following interrupt sources:

- Overflow/Underflow (OVF)
- Retrigger (TRG)
- Count (CNT) - refer also to description of EVCTRL.CNTSEL.
- Capture Overflow Error (ERR)
- Non-Recoverable Update Fault (UFS)

Downloaded from Arrow.com.

- Debug Fault State (DFS)
- Recoverable Faults (FAULTn)
- Non-recoverable Faults (FAULTx)
- Compare Match or Capture Channels (MCx)

These interrupts are asynchronous wake-up sources. See Sleep Mode Entry and Exit Table in PM/Sleep Mode Controller section for details.

Each interrupt source has an interrupt flag associated with it. The interrupt flag in the Interrupt Flag Status and Clear (INTFLAG) register is set when the interrupt condition occurs. Each interrupt can be individually enabled by writing a '1' to the corresponding bit in the Interrupt Enable Set (INTENSET) register, and disabled by writing a '1' to the corresponding bit in the Interrupt Enable Clear (INTENCLR) register. An interrupt request is generated when the interrupt flag is set and the corresponding interrupt is enabled. The interrupt request remains active until the interrupt flag is cleared, the interrupt is disabled, or the TCC is reset. See 31.8.12 INTFLAG for details on how to clear interrupt flags. The TCC has one common interrupt request line for all the interrupt sources. The user must read the INTFLAG register to determine which interrupt condition is present.

Note: Interrupts must be globally enabled for interrupt requests to be generated. Refer to *Nested Vector Interrupt Controller* for details.

Related Links

11.2 Nested Vector Interrupt Controller
16.6.2.8 Sleep Mode Controller
16.6.2.8.1 IDLE Mode
16.6.2.8.2 STANDBY Mode

31.6.4.3 Events

The TCC can generate the following output events:

- Overflow/Underflow (OVF)
- Trigger (TRG)
- Counter (CNT) For further details, refer to EVCTRL.CNTSEL description.
- Compare Match or Capture on compare/capture channels: MCx

Writing a '1' ('0') to an Event Output bit in the Event Control Register (EVCTRL.xxEO) enables (disables) the corresponding output event. Refer also to *EVSYS – Event System*.

The TCC can take the following actions on a channel input event (MCx):

- Capture event
- Generate a recoverable or non-recoverable fault

The TCC can take the following actions on counter Event 1 (TCCx EV1):

- Counter re-trigger
- Counter direction control
- Stop the counter
- Decrement the counter on event
- Period and pulse width capture
- Non-recoverable fault

The TCC can take the following actions on counter Event 0 (TCCx EV0):

- Counter re-trigger
- Count on event (increment or decrement, depending on counter direction)
- Counter start - start counting on the event rising edge. Further events will not restart the counter; the counter will keep on counting using prescaled GCLK_TCCx, until it reaches TOP or ZERO, depending on the direction.
- Counter increment on event. This will increment the counter, irrespective of the counter direction.
- Count during active state of an asynchronous event (increment or decrement, depending on counter direction). In this case, the counter will be incremented or decremented on each cycle of the prescaled clock, as long as the event is active.
- Non-recoverable fault

Downloaded from Arrow.com.

The counter Event Actions are available in the Event Control registers (EVCTRL.EVACT0 and EVCTRL.EVACT1). For further details, refer to EVCTRL.

Writing a '1' ('0') to an Event Input bit in the Event Control register (EVCTRL.MCEIx or EVCTRL.TCEIx) enables (disables) the corresponding action on input event.

Note: When several events are connected to the TCC, the enabled action will apply for each of the incoming events. Refer to *EVSYS – Event System* for details on how to configure the event system.

Related Links
24. EVSYS – Event System

31.6.5 Sleep Mode Operation

The TCC can be configured to operate in any sleep mode. To be able to run in standby the RUNSTDBY bit in the Control A register (CTRLA.RUNSTDBY) must be '1'. The MODULE can in any sleep mode wake up the device using interrupts or perform actions through the Event System.

31.6.6 Synchronization

Due to asynchronicity between the main clock domain and the peripheral clock domains, some registers need to be synchronized when written or read.

The following bits are synchronized when written:

- Software Reset and Enable bits in Control A register (CTRLA.SWRST and CTRLA.ENABLE)

The following registers are synchronized when written:

- Control B Clear and Control B Set registers (CTRLBCLR and CTRLBSET)
- Status register (STATUS)
- Pattern and Pattern Buffer registers (PATT and PATTB)
- Waveform register (WAVE)
- Count Value register (COUNT)
- Period Value and Period Buffer Value registers (PER and PERB)
- Compare/Capture Channel x and Channel x Compare/Capture Buffer Value registers (CCx and CCBx)

The following registers are synchronized when read:

- Control B Clear and Control B Set registers (CTRLBCLR and CTRLBSET)
- Count Value register (COUNT): synchronization is done on demand through READSYNC command (CTRLBSET.CMD)
- Pattern and Pattern Buffer registers (PATT and PATTB)
- Waveform register (WAVE)
- Period Value and Period Buffer Value registers (PER and PERB)
- Compare/Capture Channel x and Channel x Compare/Capture Buffer Value registers (CCx and CCBx)

Required write-synchronization is denoted by the "Write-Synchronized" property in the register description.

Required read-synchronization is denoted by the "Read-Synchronized" property in the register description.

Related Links
14.3 Register Synchronization

Downloaded from Arrow.com.

31.7 Register Summary

Offset	Name	Bit Pos.	7	6	5	4	3	2	1	0
0x00	CTRLA	7:0		RESOLUTION[1:0]					ENABLE	SWRST
		15:8		ALOCK	PRESCYNC[1:0]		RUNSTDBY	PRESCALER[2:0]		
		23:16								
		31:24					CPTEN3	CPTEN2	CPTEN1	CPTEN0
0x04	CTRLBCLR	7:0	CMD[2:0]			IDXCMD[1:0]		ONESHOT	LUPD	DIR
0x05	CTRLBSET	7:0	CMD[2:0]			IDXCMD[1:0]		ONESHOT	LUPD	DIR
0x06 ... 0x07	Reserved									
0x08	SYNCBUSY	7:0	PER	WAVE	PATT	COUNT	STATUS	CTRLB	ENABLE	SWRST
		15:8					CC3	CC2	CC1	CC0
		23:16		CCB3	CCB2	CCB1	CCB0	PERB	WAVEB	PATTB
		31:24								
0x0C	FCTRLA	7:0	RESTART	BLANK[1:0]		QUAL	KEEP		SRC[1:0]	
		15:8		CAPTURE[2:0]			CHSEL[1:0]		HALT[1:0]	
		23:16	BLANKVAL[7:0]							
		31:24					FILTERVAL[3:0]			
0x10	FCTRLB	7:0	RESTART	BLANK[1:0]		QUAL	KEEP		SRC[1:0]	
		15:8		CAPTURE[2:0]			CHSEL[1:0]		HALT[1:0]	
		23:16	BLANKVAL[7:0]							
		31:24					FILTERVAL[3:0]			
0x14	WEXCTRL	7:0							OTMX[1:0]	
		15:8					DTIEN3	DTIEN2	DTIEN1	DTIEN0
		23:16	DTLS[7:0]							
		31:24	DTHS[7:0]							
0x18	DRVCTRL	7:0	NRE7	NRE6	NRE5	NRE4	NRE3	NRE2	NRE1	NRE0
		15:8	NRV7	NRV6	NRV5	NRV4	NRV3	NRV2	NRV1	NRV0
		23:16	INVEN7	INVEN6	INVEN5	INVEN4	INVEN3	INVEN2	INVEN1	INVEN0
		31:24	FILTERVAL1[3:0]				FILTERVAL0[3:0]			
0x1C ... 0x1D	Reserved									
0x1E	DBGCTRL	7:0						FDDBD		DBGRUN
0x1F	Reserved									
0x20	EVCTRL	7:0	CNTSEL[1:0]		EVACT1[2:0]			EVACT0[2:0]		
		15:8	TCEI1	TCEI0	TCINV1	TCINV0		CNTEO	TRGEO	OVFEO
		23:16					MCEI3	MCEI2	MCEI1	MCEI0
		31:24					MCEO3	MCEO2	MCEO1	MCEO0
0x24	INTENCLR	7:0					ERR	CNT	TRG	OVF
		15:8	FAULT1	FAULT0	FAULTB	FAULTA	DFS	UFS		
		23:16					MC3	MC2	MC1	MC0
		31:24								
0x28	INTENSET	7:0					ERR	CNT	TRG	OVF
		15:8	FAULT1	FAULT0	FAULTB	FAULTA	DFS	UFS		
		23:16					MC3	MC2	MC1	MC0
		31:24								
0x2C	INTFLAG	7:0					ERR	CNT	TRG	OVF
		15:8	FAULT1	FAULT0	FAULTB	FAULTA	DFS	UFS		
		23:16					MC3	MC2	MC1	MC0
		31:24								
0x30	STATUS	7:0	PERBV	WAVEBV	PATTBV		DFS	UFS	IDX	STOP
		15:8	FAULT1	FAULT0	FAULTB	FAULTA	FAULT1IN	FAULT0IN	FAULTBIN	FAULTAIN
		23:16					CCBV3	CCBV2	CCBV1	CCBV0
		31:24					CMP3	CMP2	CMP1	CMP0

Downloaded from Arrow.com.

.....continued

Offset	Name	Bit Pos.	7	6	5	4	3	2	1	0
0x34	COUNT	7:0	COUNT[7:0]							
		15:8	COUNT[15:8]							
		23:16	COUNT[23:16]							
		31:24								
0x38	PATT	7:0	PGE7	PGE6	PGE5	PGE4	PGE3	PGE2	PGE1	PGE0
		15:8	PGV7	PGV6	PGV5	PGV4	PGV3	PGV2	PGV1	PGV0
0x3A ... 0x3B	Reserved									
0x3C	WAVE	7:0	CIPEREN		RAMP[1:0]			WAVEGEN[2:0]		
		15:8					CICCEN3	CICCEN2	CICCEN1	CICCEN0
		23:16					POL3	POL2	POL1	POL0
		31:24					SWAP3	SWAP2	SWAP1	SWAP0
0x40	PER	7:0	PER[1:0]		DITHER[5:0]					
		15:8	PER[9:2]							
		23:16	PER[17:10]							
		31:24								
0x44	CC0	7:0	CC[1:0]		DITHER[5:0]					
		15:8	CC[9:2]							
		23:16	CC[17:10]							
		31:24								
0x48	CC1	7:0	CC[1:0]		DITHER[5:0]					
		15:8	CC[9:2]							
		23:16	CC[17:10]							
		31:24								
0x4C	CC2	7:0	CC[1:0]		DITHER[5:0]					
		15:8	CC[9:2]							
		23:16	CC[17:10]							
		31:24								
0x50	CC3	7:0	CC[1:0]		DITHER[5:0]					
		15:8	CC[9:2]							
		23:16	CC[17:10]							
		31:24								
0x54 ... 0x63	Reserved									
0x64	PATTB	7:0	PGEB7	PGEB6	PGEB5	PGEB4	PGEB3	PGEB2	PGEB1	PGEB0
		15:8	PGVB7	PGVB6	PGVB5	PGVB4	PGVB3	PGVB2	PGVB1	PGVB0
0x66 ... 0x67	Reserved									
0x68	WAVEB	7:0	CIPERENB		RAMPB[1:0]			WAVEGENB[2:0]		
		15:8					CICCENB3	CICCENB2	CICCENB1	CICCENB0
		23:16					POLB3	POLB2	POLB1	POLB0
		31:24					SWAPB 3	SWAPB 2	SWAPB 1	SWAPB 0
0x6C	PERB	7:0	PERB[1:0]		DITHERB[5:0]					
		15:8	PERB[9:2]							
		23:16	PERB[17:10]							
		31:24								
0x70	CCB0	7:0	CCB[1:0]		DITHERB[5:0]					
		15:8	CCB[9:2]							
		23:16	CCB[17:10]							
		31:24								
0x74	CCB1	7:0	CCB[1:0]		DITHERB[5:0]					
		15:8	CCB[9:2]							
		23:16	CCB[17:10]							
		31:24								

Downloaded from Arrow.com.

.....continued

Offset	Name	Bit Pos.	7	6	5	4	3	2	1	0
0x78	CCB2	7:0	CCB[1:0]		DITHERB[5:0]					
		15:8	CCB[9:2]							
		23:16	CCB[17:10]							
		31:24								
0x7C	CCB3	7:0	CCB[1:0]		DITHERB[5:0]					
		15:8	CCB[9:2]							
		23:16	CCB[17:10]							
		31:24								

31.8 Register Description

Registers can be 8, 16, or 32 bits wide. Atomic 8-, 16-, and 32-bit accesses are supported. In addition, the 8-bit quarters and 16-bit halves of a 32-bit register, and the 8-bit halves of a 16-bit register can be accessed directly.

Some registers require synchronization when read and/or written. Synchronization is denoted by the "Read-Synchronized" and/or "Write-Synchronized" property in each individual register description.

Optional write-protection by the Peripheral Access Controller (PAC) is denoted by the "PAC Write-Protection" property in each individual register description.

Some registers are enable-protected, meaning they can only be written when the module is disabled. Enable-protection is denoted by the "Enable-Protected" property in each individual register description.

Downloaded from Arrow.com.

31.8.1 Control A

Name: CTRLA
Offset: 0x00
Reset: 0x00000000
Property: PAC Write-Protection, Enable-Protected, Write-Synchronized (ENABLE, SWRST)

Bit	31	30	29	28	27	26	25	24
					CPTEN3	CPTEN2	CPTEN1	CPTEN0
Access					R/W	R/W	R/W	R/W
Reset					0	0	0	0

Bit	23	22	21	20	19	18	17	16
Access								
Reset								

Bit	15	14	13	12	11	10	9	8
		ALOCK	PRESCYNC[1:0]		RUNSTDBY	PRESCALER[2:0]		
Access		R/W	R/W	R/W	R/W	R/W	R/W	R/W
Reset		0	0	0	0	0	0	0

Bit	7	6	5	4	3	2	1	0
		RESOLUTION[1:0]					ENABLE	SWRST
Access		R/W	R/W				R/W	R/W
Reset		0	0				0	0

Bits 24, 25, 26, 27 – CPTEN Capture Channel x Enable
These bits are used to select the capture or compare operation on channel x.
Writing a '1' to CPTENx enables capture on channel x.
Writing a '0' to CPTENx disables capture on channel x.

Bit 14 – ALOCK Auto Lock
This bit is not synchronized.

Value	Description
0	The Lock Update bit in the Control B register (CTRLB.LUPD) is not affected by overflow/underflow, and re-trigger events
1	CTRLB.LUPD is set to '1' on each overflow/underflow or re-trigger event.

Bits 13:12 – PRESCYNC[1:0] Prescaler and Counter Synchronization
These bits select if on re-trigger event, the Counter is cleared or reloaded on either the next GCLK_TCCx clock, or on the next prescaled GCLK_TCCx clock. It is also possible to reset the prescaler on re-trigger event.
These bits are not synchronized.

Value	Name	Description	
		Counter Reloaded	Prescaler
0x0	GCLK	Reload or reset Counter on next GCLK	-
0x1	PRESC	Reload or reset Counter on next prescaler clock	-
0x2	RESYNC	Reload or reset Counter on next GCLK	Reset prescaler counter
0x3	Reserved		

Bit 11 – RUNSTDBY Run in Standby
This bit is used to keep the TCC running in standby mode.
This bit is not synchronized.

Downloaded from Arrow.com.

Value	Description
0	The TCC is halted in standby.
1	The TCC continues to run in standby.

Bits 10:8 – PRESCALER[2:0] Prescaler
These bits select the Counter prescaler factor.
These bits are not synchronized.

Value	Name	Description
0x0	DIV1	Prescaler: GCLK_TCC
0x1	DIV2	Prescaler: GCLK_TCC/2
0x2	DIV4	Prescaler: GCLK_TCC/4
0x3	DIV8	Prescaler: GCLK_TCC/8
0x4	DIV16	Prescaler: GCLK_TCC/16
0x5	DIV64	Prescaler: GCLK_TCC/64
0x6	DIV256	Prescaler: GCLK_TCC/256
0x7	DIV1024	Prescaler: GCLK_TCC/1024

Bits 6:5 – RESOLUTION[1:0] Dithering Resolution
These bits increase the TCC resolution by enabling the dithering options.
These bits are not synchronized.

Table 31-7. Dithering

Value	Name	Description
0x0	NONE	The dithering is disabled.
0x1	DITH4	Dithering is done every 16 PWM frames. PER[3:0] and CCx[3:0] contain dithering pattern selection.
0x2	DITH5	Dithering is done every 32 PWM frames. PER[4:0] and CCx[4:0] contain dithering pattern selection.
0x3	DITH6	Dithering is done every 64 PWM frames. PER[5:0] and CCx[5:0] contain dithering pattern selection.

Bit 1 – ENABLE Enable
Due to synchronization there is delay from writing CTRLA.ENABLE until the peripheral is enabled/disabled. The value written to CTRLA.ENABLE will read back immediately and the ENABLE bit in the SYNCBUSY register (SYNCBUSY.ENABLE) will be set. SYNCBUSY.ENABLE will be cleared when the operation is complete.

Value	Description
0	The peripheral is disabled.
1	The peripheral is enabled.

Bit 0 – SWRST Software Reset
Writing a '0' to this bit has no effect.
Writing a '1' to this bit resets all registers in the TCC (except DBGCTRL) to their initial state, and the TCC will be disabled.
Writing a '1' to CTRLA.SWRST will always take precedence; all other writes in the same write-operation will be discarded.
Due to synchronization there is a delay from writing CTRLA.SWRST until the reset is complete. CTRLA.SWRST and SYNCBUSY.SWRST will both be cleared when the reset is complete.

Value	Description
0	There is no reset operation ongoing.
1	The reset operation is ongoing.

Downloaded from Arrow.com.

31.8.2 Control B Clear

Name: CTRLBCLR
Offset: 0x04
Reset: 0x00
Property: PAC Write-Protection, Write-Synchronized, Read-Synchronized

This register allows the user to change this register without doing a read-modify-write operation. Changes in this register will also be reflected in the Control B Set (CTRLBSET) register.

Bit	7	6	5	4	3	2	1	0
	CMD[2:0]			IDXCMD[1:0]		ONESHOT	LUPD	DIR
Access	R/W	R/W	R/W	R/W	R/W	R/W	R/W	R/W
Reset	0	0	0	0	0	0	0	0

Bits 7:5 – CMD[2:0] TCC Command
Writing zero to this bit group has no effect.
Writing a '1' to any of these bits will clear the pending command.

Value	Name	Description
0x0	NONE	No action
0x1	RETRIGGER	Clear start, restart or retrigger
0x2	STOP	Force stop
0x3	UPDATE	Force update of double buffered registers
0x4	READSYNC	Force COUNT read synchronization

Bits 4:3 – IDXCMD[1:0] Ramp Index Command
These bits can be used to force cycle A and cycle B changes in RAMP2 and RAMP2A operation. On timer/counter update condition, the command is executed, the IDX flag in STATUS register is updated and the IDXCMD command is cleared.
Writing zero to these bits has no effect.
Writing a '1' to any of these bits will clear the pending command.

Value	Name	Description
0x0	DISABLE	DISABLE Command disabled: IDX toggles between cycles A and B
0x1	SET	Set IDX: cycle B will be forced in the next cycle
0x2	CLEAR	Clear IDX: cycle A will be forced in next cycle
0x3	HOLD	Hold IDX: the next cycle will be the same as the current cycle.

Bit 2 – ONESHOT One-Shot
This bit controls one-shot operation of the TCC. When one-shot operation is enabled, the TCC will stop counting on the next overflow/underflow condition or on a stop command.
Writing a '0' to this bit has no effect
Writing a '1' to this bit will disable the one-shot operation.

Value	Description
0	The TCC will update the counter value on overflow/underflow condition and continue operation.
1	The TCC will stop counting on the next underflow/overflow condition.

Bit 1 – LUPD Lock Update
This bit controls the update operation of the TCC buffered registers.
When CTRLB.LUPD is cleared, the hardware UPDATE registers with value from their buffered registers is enabled.
This bit has no effect when input capture operation is enabled.
Writing a '0' to this bit has no effect.
Writing a '1' to this bit will enable the registers updates on hardware UPDATE condition.

Value	Description
0	The CCBx, PERB, PGVB, and PGEB buffer registers values *are* copied into the corresponding CCx, PER, PGV, and PGE registers on hardware update condition.
1	The CCBx, PERB, PGVB, and PGEB buffer registers values are *not* copied into the corresponding CCx, PER, PGV, and PGE registers on hardware update condition.

Downloaded from Arrow.com.

Bit 0 – DIR Counter Direction
This bit is used to change the direction of the counter.
Writing a '0' to this bit has no effect
Writing a '1' to this bit will clear the bit and make the counter count up.

Value	Description
0	The timer/counter is counting up (incrementing).
1	The timer/counter is counting down (decrementing).

Downloaded from Arrow.com.

31.8.3 Control B Set

Name: CTRLBSET
Offset: 0x05
Reset: 0x00
Property: PAC Write-Protection, Write-Synchronized, Read-Synchronized

This register allows the user to change this register without doing a read-modify-write operation. Changes in this register will also be reflected in the Control B Set (CTRLBCLR) register.

Bit	7	6	5	4	3	2	1	0
	CMD[2:0]			IDXCMD[1:0]		ONESHOT	LUPD	DIR
Access	R/W	R/W	R/W	R/W	R/W	R/W	R/W	R/W
Reset	0	0	0	0	0	0	0	0

Bits 7:5 – CMD[2:0] TCC Command
These bits can be used for software control of re-triggering and stop commands of the TCC. When a command has been executed, the CMD bit field will be read back as zero. The commands are executed on the next prescaled GCLK_TCC clock cycle.
Writing zero to this bit group has no effect
Writing a valid value to this bit group will set the associated command.

Value	Name	Description
0x0	NONE	No action
0x1	RETRIGGER	Force start, restart or retrigger
0x2	STOP	Force stop
0x3	UPDATE	Force update of double buffered registers
0x4	READSYNC	Force a read synchronization of COUNT

Bits 4:3 – IDXCMD[1:0] Ramp Index Command
These bits can be used to force cycle A and cycle B changes in RAMP2 and RAMP2A operation. On timer/counter update condition, the command is executed, the IDX flag in STATUS register is updated and the IDXCMD command is cleared.
Writing a zero to these bits has no effect.
Writing a valid value to these bits will set a command.

Value	Name	Description
0x0	DISABLE	Command disabled: IDX toggles between cycles A and B
0x1	SET	Set IDX: cycle B will be forced in the next cycle
0x2	CLEAR	Clear IDX: cycle A will be forced in next cycle
0x3	HOLD	Hold IDX: the next cycle will be the same as the current cycle.

Bit 2 – ONESHOT One-Shot
This bit controls one-shot operation of the TCC. When in one-shot operation, the TCC will stop counting on the next overflow/underflow condition or a stop command.
Writing a '0' to this bit has no effect.
Writing a '1' to this bit will enable the one-shot operation.

Value	Description
0	The TCC will count continuously.
1	The TCC will stop counting on the next underflow/overflow condition.

Bit 1 – LUPD Lock Update
This bit controls the update operation of the TCC buffered registers.
When CTRLB.LUPD is set, the hardware UPDATE registers with value from their buffered registers is disabled. Disabling the update ensures that all buffer registers are valid before an hardware update is performed. After all the buffer registers are loaded correctly, the buffered registers can be unlocked.
This bit has no effect when input capture operation is enabled.
Writing a '0' to this bit has no effect.
Writing a '1' to this bit will disable the registers updates on hardware UPDATE condition.

Downloaded from Arrow.com.

Value	Description
0	The CCBx, PERB, PGVB, PGOB, and SWAPBx buffer registers values *are* copied into the corresponding CCx, PER, PGV, PGO and SWAPx registers on hardware update condition.
1	The CCBx, PERB, PGVB, PGOB, and SWAPBx buffer registers values are *not* copied into CCx, PER, PGV, PGO and SWAPx registers on hardware update condition.

Bit 0 – DIR Counter Direction
This bit is used to change the direction of the counter.
Writing a '0' to this bit has no effect
Writing a '1' to this bit will clear the bit and make the counter count up.

Value	Description
0	The timer/counter is counting up (incrementing).
1	The timer/counter is counting down (decrementing).

Downloaded from Arrow.com.

31.8.4 Synchronization Busy

Name: SYNCBUSY
Offset: 0x08
Reset: 0x00000000
Property: -

Bit	31	30	29	28	27	26	25	24
Access								
Reset								

Bit	23	22	21	20	19	18	17	16
		CCB3	CCB2	CCB1	CCB0	PERB	WAVEB	PATTB
Access		R	R	R	R	R	R	R
Reset		0	0	0	0	0	0	0

Bit	15	14	13	12	11	10	9	8
					CC3	CC2	CC1	CC0
Access					R	R	R	R
Reset					0	0	0	0

Bit	7	6	5	4	3	2	1	0
	PER	WAVE	PATT	COUNT	STATUS	CTRLB	ENABLE	SWRST
Access	R	R	R	R	R	R	R	R
Reset	0	0	0	0	0	0	0	0

Bits 19, 20, 21, 22 – CCB Compare/Capture Buffer Channel x Synchronization Busy
This bit is cleared when the synchronization of Compare/Capture Buffer Channel x register between the clock domains is complete.
This bit is set when the synchronization of Compare/Capture Buffer Channel x register between clock domains is started.
CCBx bit is available only for existing Compare/Capture Channels. For details on CC channels number, refer to each TCC feature list.

Bit 18 – PERB PER Buffer Synchronization Busy
This bit is cleared when the synchronization of PERB register between the clock domains is complete.
This bit is set when the synchronization of PERB register between clock domains is started.

Bit 17 – WAVEB WAVE Buffer Synchronization Busy
This bit is cleared when the synchronization of WAVEB register between the clock domains is complete.
This bit is set when the synchronization of WAVEB register between clock domains is started.

Bit 16 – PATTB PATT Buffer Synchronization Busy
This bit is cleared when the synchronization of PATTB register between the clock domains is complete.
This bit is set when the synchronization of PATTB register between clock domains is started.

Bits 8, 9, 10, 11 – CC Compare/Capture Channel x Synchronization Busy
This bit is cleared when the synchronization of Compare/Capture Channel x register between the clock domains is complete.
This bit is set when the synchronization of Compare/Capture Channel x register between clock domains is started.
CCx bit is available only for existing Compare/Capture Channels. For details on CC channels number, refer to each TCC feature list.
This bit is set when the synchronization of CCx register between clock domains is started.

Downloaded from Arrow.com.

Bit 7 – PER PER Synchronization Busy
This bit is cleared when the synchronization of PER register between the clock domains is complete.
This bit is set when the synchronization of PER register between clock domains is started.

Bit 6 – WAVE WAVE Synchronization Busy
This bit is cleared when the synchronization of WAVE register between the clock domains is complete.
This bit is set when the synchronization of WAVE register between clock domains is started.

Bit 5 – PATT PATT Synchronization Busy
This bit is cleared when the synchronization of PATTERN register between the clock domains is complete.
This bit is set when the synchronization of PATTERN register between clock domains is started.

Bit 4 – COUNT COUNT Synchronization Busy
This bit is cleared when the synchronization of COUNT register between the clock domains is complete.
This bit is set when the synchronization of COUNT register between clock domains is started.

Bit 3 – STATUS STATUS Synchronization Busy
This bit is cleared when the synchronization of STATUS register between the clock domains is complete.
This bit is set when the synchronization of STATUS register between clock domains is started.

Bit 2 – CTRLB CTRLB Synchronization Busy
This bit is cleared when the synchronization of CTRLB register between the clock domains is complete.
This bit is set when the synchronization of CTRLB register between clock domains is started.

Bit 1 – ENABLE ENABLE Synchronization Busy
This bit is cleared when the synchronization of ENABLE bit between the clock domains is complete.
This bit is set when the synchronization of ENABLE bit between clock domains is started.

Bit 0 – SWRST SWRST Synchronization Busy
This bit is cleared when the synchronization of SWRST bit between the clock domains is complete.
This bit is set when the synchronization of SWRST bit between clock domains is started.

Downloaded from Arrow.com.

31.8.5 Fault Control A and B

Name: FCTRLn
Offset: 0x0C + n*0x04 [n=0..1]
Reset: 0x00000000
Property: PAC Write-Protection, Enable-Protected

Bit	31	30	29	28	27	26	25	24
					FILTERVAL[3:0]			
Access					R/W	R/W	R/W	R/W
Reset					0	0	0	0

Bit	23	22	21	20	19	18	17	16
	BLANKVAL[7:0]							
Access	R/W	R/W	R/W	R/W	R/W	R/W	R/W	R/W
Reset	0	0	0	0	0	0	0	0

Bit	15	14	13	12	11	10	9	8
		CAPTURE[2:0]			CHSEL[1:0]		HALT[1:0]	
Access		R/W	R/W	R/W	R/W	R/W	R/W	R/W
Reset		0	0	0	0	0	0	0

Bit	7	6	5	4	3	2	1	0
	RESTART	BLANK[1:0]		QUAL	KEEP		SRC[1:0]	
Access	R/W	R/W	R/W	R/W	R/W		R/W	R/W
Reset	0	0	0	0	0		0	0

Bits 27:24 – FILTERVAL[3:0] Recoverable Fault n Filter Value
These bits define the filter value applied on MCEx (x=0,1) event input line. The value must be set to zero when MCEx event is used as synchronous event.

Bits 23:16 – BLANKVAL[7:0] Recoverable Fault n Blanking Value
These bits determine the duration of the blanking of the fault input source. Activation and edge selection of the blank filtering are done by the BLANK bits (FCTRLn.BLANK).
When enabled, the fault input source is internally disabled for BLANKVAL* prescaled GCLK_TCC periods after the detection of the waveform edge.

Bits 14:12 – CAPTURE[2:0] Recoverable Fault n Capture Action
These bits select the capture and Fault n interrupt/event conditions.

Table 31-8. Fault n Capture Action

Value	Name	Description
0x0	DISABLE	Capture on valid recoverable Fault n is disabled
0x1	CAPT	On rising edge of a valid recoverable Fault n, capture counter value on channel selected by CHSEL[1:0]. INTFLAG.FAULTn flag rises on each new captured value.
0x2	CAPTMIN	On rising edge of a valid recoverable Fault n, capture counter value on channel selected by CHSEL[1:0], if COUNT value is lower than the last stored capture value (CC). INTFLAG.FAULTn flag rises on each local minimum detection.
0x3	CAPTMAX	On rising edge of a valid recoverable Fault n, capture counter value on channel selected by CHSEL[1:0], if COUNT value is higher than the last stored capture value (CC). INTFLAG.FAULTn flag rises on each local maximun detection.
0x4	LOCMIN	On rising edge of a valid recoverable Fault n, capture counter value on channel selected by CHSEL[1:0]. INTFLAG.FAULTn flag rises on each local minimum value detection.
0x5	LOCMAX	On rising edge of a valid recoverable Fault n, capture counter value on channel selected by CHSEL[1:0]. INTFLAG.FAULTn flag rises on each local maximun detection.

Downloaded from Arrow.com.

.....continued		
Value	Name	Description
0x6	DERIV0	On rising edge of a valid recoverable Fault n, capture counter value on channel selected by CHSEL[1:0]. INTFLAG.FAULTn flag rises on each local maximun or minimum detection.
0x7	CAPTMARK	Capture with ramp index as MSB value.

Bits 11:10 – CHSEL[1:0] Recoverable Fault n Capture Channel
These bits select the channel for capture operation triggered by recoverable Fault n.

Value	Name	Description
0x0	CC0	Capture value stored into CC0
0x1	CC1	Capture value stored into CC1
0x2	CC2	Capture value stored into CC2
0x3	CC3	Capture value stored into CC3

Bits 9:8 – HALT[1:0] Recoverable Fault n Halt Operation
These bits select the halt action for recoverable Fault n.

Value	Name	Description
0x0	DISABLE	Halt action disabled
0x1	HW	Hardware halt action
0x2	SW	Software halt action
0x3	NR	Non-recoverable fault

Bit 7 – RESTART Recoverable Fault n Restart
Setting this bit enables restart action for Fault n.

Value	Description
0	Fault n restart action is disabled.
1	Fault n restart action is enabled.

Bits 6:5 – BLANK[1:0] Recoverable Fault n Blanking Operation
These bits, select the blanking start point for recoverable Fault n.

Value	Name	Description
0x0	START	Blanking applied from start of the Ramp period
0x1	RISE	Blanking applied from rising edge of the waveform output
0x2	FALL	Blanking applied from falling edge of the waveform output
0x3	BOTH	Blanking applied from each toggle of the waveform output

Bit 4 – QUAL Recoverable Fault n Qualification
Setting this bit enables the recoverable Fault n input qualification.

Value	Description
0	The recoverable Fault n input is not disabled on CMPx value condition.
1	The recoverable Fault n input is disabled when output signal is at inactive level (CMPx == 0).

Bit 3 – KEEP Recoverable Fault n Keep
Setting this bit enables the Fault n keep action.

Value	Description
0	The Fault n state is released as soon as the recoverable Fault n is released.
1	The Fault n state is released at the end of TCC cycle.

Bits 1:0 – SRC[1:0] Recoverable Fault n Source
These bits select the TCC event input for recoverable Fault n.
Event system channel connected to MCEx event input, must be configured to route the event asynchronously, when used as a recoverable Fault n input.

Value	Name	Description
0x0	DISABLE	Fault input disabled
0x1	ENABLE	MCEx (x=0,1) event input
0x2	INVERT	Inverted MCEx (x=0,1) event input

Downloaded from Arrow.com.

Value	Name	Description
0x3	ALTFAULT	Alternate fault (A or B) state at the end of the previous period.

Downloaded from Arrow.com.

31.8.6 Waveform Extension Control

Name: WEXCTRL
Offset: 0x14
Reset: 0x00000000
Property: PAC Write-Protection, Enable-Protected

Bit	31	30	29	28	27	26	25	24
	DTHS[7:0]							
Access	R/W	R/W	R/W	R/W	R/W	R/W	R/W	R/W
Reset	0	0	0	0	0	0	0	0

Bit	23	22	21	20	19	18	17	16
	DTLS[7:0]							
Access	R/W	R/W	R/W	R/W	R/W	R/W	R/W	R/W
Reset	0	0	0	0	0	0	0	0

Bit	15	14	13	12	11	10	9	8
					DTIEN3	DTIEN2	DTIEN1	DTIEN0
Access					R/W	R/W	R/W	R/W
Reset					0	0	0	0

Bit	7	6	5	4	3	2	1	0
							OTMX[1:0]	
Access							R/W	R/W
Reset							0	0

Bits 31:24 – DTHS[7:0] Dead-Time High Side Outputs Value
This register holds the number of GCLK_TCC clock cycles for the dead-time high side.

Bits 23:16 – DTLS[7:0] Dead-time Low Side Outputs Value
This register holds the number of GCLK_TCC clock cycles for the dead-time low side.

Bits 8, 9, 10, 11 – DTIENx Dead-time Insertion Generator x Enable
Setting any of these bits enables the dead-time insertion generator for the corresponding output matrix. This will override the output matrix [x] and [x+WO_NUM/2], with the low side and high side waveform respectively.

Value	Description
0	No dead-time insertion override.
1	Dead time insertion override on signal outputs[x] and [x+WO_NUM/2], from matrix outputs[x] signal.

Bits 1:0 – OTMX[1:0] Output Matrix
These bits define the matrix routing of the TCC waveform generation outputs to the port pins, according to 31.6.3.7 Waveform Extension.

Downloaded from Arrow.com.

31.8.7 Driver Control

Name: DRVCTRL
Offset: 0x18
Reset: 0x00000000
Property: PAC Write-Protection, Enable-Protected

Bit	31	30	29	28	27	26	25	24
	FILTERVAL1[3:0]				FILTERVAL0[3:0]			
Access	R/W	R/W	R/W	R/W	R/W	R/W	R/W	R/W
Reset	0	0	0	0	0	0	0	0

Bit	23	22	21	20	19	18	17	16
	INVEN7	INVEN6	INVEN5	INVEN4	INVEN3	INVEN2	INVEN1	INVEN0
Access	R/W	R/W	R/W	R/W	R/W	R/W	R/W	R/W
Reset	0	0	0	0	0	0	0	0

Bit	15	14	13	12	11	10	9	8
	NRV7	NRV6	NRV5	NRV4	NRV3	NRV2	NRV1	NRV0
Access	R/W	R/W	R/W	R/W	R/W	R/W	R/W	R/W
Reset	0	0	0	0	0	0	0	0

Bit	7	6	5	4	3	2	1	0
	NRE7	NRE6	NRE5	NRE4	NRE3	NRE2	NRE1	NRE0
Access	R/W	R/W	R/W	R/W	R/W	R/W	R/W	R/W
Reset	0	0	0	0	0	0	0	0

Bits 31:28 – FILTERVAL1[3:0] Non-Recoverable Fault Input 1 Filter Value
These bits define the filter value applied on TCE1 event input line. When the TCE1 event input line is configured as a synchronous event, this value must be 0x0.

Bits 27:24 – FILTERVAL0[3:0] Non-Recoverable Fault Input 0 Filter Value
These bits define the filter value applied on TCE0 event input line. When the TCE0 event input line is configured as a synchronous event, this value must be 0x0.

Bits 16, 17, 18, 19, 20, 21, 22, 23 – INVENx Waveform Output x Inversion
These bits are used to select inversion on the output of channel x.
Writing a '1' to INVENx inverts output from WO[x].
Writing a '0' to INVENx disables inversion of output from WO[x].

Bits 8, 9, 10, 11, 12, 13, 14, 15 – NRVx NRVx Non-Recoverable State x Output Value
These bits define the value of the enabled override outputs, under non-recoverable fault condition.

Bits 0, 1, 2, 3, 4, 5, 6, 7 – NREx Non-Recoverable State x Output Enable
These bits enable the override of individual outputs by NRVx value, under non-recoverable fault condition.

Value	Description
0	Non-recoverable fault tri-state the output.
1	Non-recoverable faults set the output to NRVx level.

Downloaded from Arrow.com.

31.8.8 Debug control

Name: DBGCTRL
Offset: 0x1E
Reset: 0x00
Property: PAC Write-Protection

Bit	7	6	5	4	3	2	1	0
						FDDBD		DBGRUN
Access						R/W		R/W
Reset						0		0

Bit 2 – FDDBD Fault Detection on Debug Break Detection
This bit is not affected by software Reset and should not be changed by software while the TCC is enabled.
By default this bit is zero, and the on-chip debug (OCD) fault protection is disabled.

Value	Description
0	No faults are generated when TCC is halted in Debug mode.
1	A non recoverable fault is generated and FAULTD flag is set when TCC is halted in Debug mode.

Bit 0 – DBGRUN Debug Running State
This bit is not affected by software Reset and should not be changed by software while the TCC is enabled.

Value	Description
0	The TCC is halted when the device is halted in Debug mode.
1	The TCC continues normal operation when the device is halted in Debug mode.

Downloaded from Arrow.com.

31.8.9 Event Control

Name: EVCTRL
Offset: 0x20
Reset: 0x00000000
Property: PAC Write-Protection, Enable-Protected

Bit	31	30	29	28	27	26	25	24
					MCEO3	MCEO2	MCEO1	MCEO0
Access					R/W	R/W	R/W	R/W
Reset					0	0	0	0

Bit	23	22	21	20	19	18	17	16
					MCEI3	MCEI2	MCEI1	MCEI0
Access					R/W	R/W	R/W	R/W
Reset					0	0	0	0

Bit	15	14	13	12	11	10	9	8
	TCEI1	TCEI0	TCINV1	TCINV0		CNTEO	TRGEO	OVFEO
Access	R/W	R/W	R/W	R/W		R/W	R/W	R/W
Reset	0	0	0	0		0	0	0

Bit	7	6	5	4	3	2	1	0
	CNTSEL[1:0]		EVACT1[2:0]			EVACT0[2:0]		
Access	R/W	R/W	R/W	R/W	R/W	R/W	R/W	R/W
Reset	0	0	0	0	0	0	0	0

Bits 24, 25, 26, 27 – MCEOx Match or Capture Channel x Event Output Enable
These bits control if the match/capture event on channel x is enabled and will be generated for every match or capture.

Value	Description
0	Match/capture x event is disabled and will not be generated.
1	Match/capture x event is enabled and will be generated for every compare/capture on channel x.

Bits 16, 17, 18, 19 – MCEIx Match or Capture Channel x Event Input Enable
These bits indicate if the match/capture x incoming event is enabled
These bits are used to enable match or capture input events to the CCx channel of TCC.

Value	Description
0	Incoming events are disabled.
1	Incoming events are enabled.

Bits 14, 15 – TCEIx Timer/Counter Event Input x Enable
This bit is used to enable input event x to the TCC.

Value	Description
0	Incoming event x is disabled.
1	Incoming event x is enabled.

Bits 12, 13 – TCINVx Timer/Counter Event x Invert Enable
This bit inverts the event x input.

Value	Description
0	Input event source x is not inverted.
1	Input event source x is inverted.

Bit 10 – CNTEO Timer/Counter Event Output Enable
This bit is used to enable the counter cycle event. When enabled, an event will be generated on begin or end of counter cycle depending of CNTSEL[1:0] settings.

Downloaded from Arrow.com.

Value	Description
0	Counter cycle output event is disabled and will not be generated.
1	Counter cycle output event is enabled and will be generated depend of CNTSEL[1:0] value.

Bit 9 – TRGEO Retrigger Event Output Enable
This bit is used to enable the counter retrigger event. When enabled, an event will be generated when the counter retriggers operation.

Value	Description
0	Counter retrigger event is disabled and will not be generated.
1	Counter retrigger event is enabled and will be generated for every counter retrigger.

Bit 8 – OVFEO Overflow/Underflow Event Output Enable
This bit is used to enable the overflow/underflow event. When enabled an event will be generated when the counter reaches the TOP or the ZERO value.

Value	Description
0	Overflow/underflow counter event is disabled and will not be generated.
1	Overflow/underflow counter event is enabled and will be generated for every counter overflow/ underflow.

Bits 7:6 – CNTSEL[1:0] Timer/Counter Interrupt and Event Output Selection
These bits define on which part of the counter cycle the counter event output is generated.

Value	Name	Description
0x0	BEGIN	An interrupt/event is generated at begin of each counter cycle
0x1	END	An interrupt/event is generated at end of each counter cycle
0x2	BETWEEN	An interrupt/event is generated between each counter cycle.
0x3	BOUNDARY	An interrupt/event is generated at begin of first counter cycle, and end of last counter cycle.

Bits 5:3 – EVACT1[2:0] Timer/Counter Event Input 1 Action
These bits define the action the TCC will perform on TCE1 event input.

Value	Name	Description
0x0	OFF	Event action disabled.
0x1	RETRIGGER	Start, restart or re-trigger TC on event
0x2	DIR (asynch)	Direction control
0x3	STOP	Stop TC on event
0x4	DEC	Decrement TC on event
0x5	PPW	Period captured into CC0 Pulse Width on CC1
0x6	PWP	Period captured into CC1 Pulse Width on CC0
0x7	FAULT	Non-recoverable Fault

Bits 2:0 – EVACT0[2:0] Timer/Counter Event Input 0 Action
These bits define the action the TCC will perform on TCE0 event input 0.

Value	Name	Description
0x0	OFF	Event action disabled.
0x1	RETRIGGER	Start, restart or re-trigger TC on event
0x2	COUNTEV	Count on event.
0x3	START	Start TC on event
0x4	INC	Increment TC on EVENT
0x5	COUNT (async)	Count on active state of asynchronous event
0x6	-	Reserved
0x7	FAULT	Non-recoverable Fault

Downloaded from Arrow.com.

31.8.10 Interrupt Enable Clear

Name: INTENCLR
Offset: 0x24
Reset: 0x00000000
Property: PAC Write-Protection

This register allows the user to enable an interrupt without doing a read-modify-write operation. Changes in this register will also be reflected in the Interrupt Enable Set (INTENSET) register.

Bit	31	30	29	28	27	26	25	24
Access								
Reset								

Bit	23	22	21	20	19	18	17	16
					MC3	MC2	MC1	MC0
Access					R/W	R/W	R/W	R/W
Reset					0	0	0	0

Bit	15	14	13	12	11	10	9	8
	FAULT1	FAULT0	FAULTB	FAULTA	DFS	UFS		
Access	R/W	R/W	R/W	R/W	R/W	R/W		
Reset	0	0	0	0	0	0		

Bit	7	6	5	4	3	2	1	0
					ERR	CNT	TRG	OVF
Access					R/W	R/W	R/W	R/W
Reset					0	0	0	0

Bits 16, 17, 18, 19 – MCx Match or Capture Channel x Interrupt Enable
Writing a '0' to this bit has no effect.
Writing a '1' to this bit will clear the corresponding Match or Capture Channel x Interrupt Disable/Enable bit, which disables the Match or Capture Channel x interrupt.

Value	Description
0	The Match or Capture Channel x interrupt is disabled.
1	The Match or Capture Channel x interrupt is enabled.

Bit 15 – FAULT1 Non-Recoverable Fault x Interrupt Enable
Writing a '0' to this bit has no effect.
Writing a '1' to this bit will clear the Non-Recoverable Fault x Interrupt Disable/Enable bit, which disables the Non-Recoverable Fault x interrupt.

Value	Description
0	The Non-Recoverable Fault x interrupt is disabled.
1	The Non-Recoverable Fault x interrupt is enabled.

Bit 14 – FAULT0 Non-Recoverable Fault x Interrupt Enable
Writing a '0' to this bit has no effect.
Writing a '1' to this bit will clear the Non-Recoverable Fault x Interrupt Disable/Enable bit, which disables the Non-Recoverable Fault x interrupt.

Value	Description
0	The Non-Recoverable Fault x interrupt is disabled.
1	The Non-Recoverable Fault x interrupt is enabled.

Bit 13 – FAULTB Recoverable Fault B Interrupt Enable
Writing a '0' to this bit has no effect.

Downloaded from Arrow.com.

Writing a '1' to this bit will clear the Recoverable Fault B Interrupt Disable/Enable bit, which disables the Recoverable Fault B interrupt.

Value	Description
0	The Recoverable Fault B interrupt is disabled.
1	The Recoverable Fault B interrupt is enabled.

Bit 12 – FAULTA Recoverable Fault A Interrupt Enable
Writing a '0' to this bit has no effect.
Writing a '1' to this bit will clear the Recoverable Fault A Interrupt Disable/Enable bit, which disables the Recoverable Fault A interrupt.

Value	Description
0	The Recoverable Fault A interrupt is disabled.
1	The Recoverable Fault A interrupt is enabled.

Bit 11 – DFS Non-Recoverable Debug Fault Interrupt Enable
Writing a '0' to this bit has no effect.
Writing a '1' to this bit will clear the Debug Fault State Interrupt Disable/Enable bit, which disables the Debug Fault State interrupt.

Value	Description
0	The Debug Fault State interrupt is disabled.
1	The Debug Fault State interrupt is enabled.

Bit 10 – UFS Non-Recoverable Update Fault Interrupt Enable
Writing a zero to this bit has no effect.
Writing a one to this bit will clear the Non-Recoverable Update Fault Interrupt Disable/Enable bit, which disables the Non-Recoverable Update Fault interrupt.
Note: This bit is only available on variant L devices. Refer to the *Configuration Summary* for more information.

Value	Description
0	The Non-Recoverable Update Fault interrupt is disabled.
1	The Non-Recoverable Update Fault interrupt is enabled.

Bit 3 – ERR Error Interrupt Enable
Writing a '0' to this bit has no effect.
Writing a '1' to this bit will clear the Error Interrupt Disable/Enable bit, which disables the Compare interrupt.

Value	Description
0	The Error interrupt is disabled.
1	The Error interrupt is enabled.

Bit 2 – CNT Counter Interrupt Enable
Writing a '0' to this bit has no effect.
Writing a '1' to this bit will clear the Counter Interrupt Disable/Enable bit, which disables the Counter interrupt.

Value	Description
0	The Counter interrupt is disabled.
1	The Counter interrupt is enabled.

Bit 1 – TRG Retrigger Interrupt Enable
Writing a '0' to this bit has no effect.
Writing a '1' to this bit will clear the Retrigger Interrupt Disable/Enable bit, which disables the Retrigger interrupt.

Value	Description
0	The Retrigger interrupt is disabled.
1	The Retrigger interrupt is enabled.

Bit 0 – OVF Overflow Interrupt Enable
Writing a '0' to this bit has no effect.
Writing a '1' to this bit will clear the Overflow Interrupt Disable/Enable bit, which disables the Overflow interrupt request.

Downloaded from Arrow.com.

Value	Description
0	The Overflow interrupt is disabled.
1	The Overflow interrupt is enabled.

Downloaded from Arrow.com.

31.8.11 Interrupt Enable Set

Name: INTENSET
Offset: 0x28
Reset: 0x00000000
Property: PAC Write-Protection

This register allows the user to enable an interrupt without doing a read-modify-write operation. Changes in this register will also be reflected in the Interrupt Enable Clear (INTENCLR) register.

Bit	31	30	29	28	27	26	25	24
Access								
Reset								

Bit	23	22	21	20	19	18	17	16
					MC3	MC2	MC1	MC0
Access					R/W	R/W	R/W	R/W
Reset					0	0	0	0

Bit	15	14	13	12	11	10	9	8
	FAULT1	FAULT0	FAULTB	FAULTA	DFS	UFS		
Access	R/W	R/W	R/W	R/W	R/W	R/W		
Reset	0	0	0	0	0	0		

Bit	7	6	5	4	3	2	1	0
					ERR	CNT	TRG	OVF
Access					R/W	R/W	R/W	R/W
Reset					0	0	0	0

Bits 16, 17, 18, 19 – MCx Match or Capture Channel x Interrupt Enable
Writing a '0' to this bit has no effect.
Writing a '1' to this bit will clear the corresponding Match or Capture Channel x Interrupt Disable/Enable bit, which disables the Match or Capture Channel x interrupt.

Value	Description
0	The Match or Capture Channel x interrupt is disabled.
1	The Match or Capture Channel x interrupt is enabled.

Bit 15 – FAULT1 Non-Recoverable Fault x Interrupt Enable
Writing a '0' to this bit has no effect.
Writing a '1' to this bit will set the Non-Recoverable Fault x Interrupt Disable/Enable bit, which enables the Non-Recoverable Fault x interrupt.

Value	Description
0	The Non-Recoverable Fault x interrupt is disabled.
1	The Non-Recoverable Fault x interrupt is enabled.

Bit 14 – FAULT0 Non-Recoverable Fault x Interrupt Enable
Writing a '0' to this bit has no effect.
Writing a '1' to this bit will clear the Non-Recoverable Fault x Interrupt Disable/Enable bit, which disables the Non-Recoverable Fault x interrupt.

Value	Description
0	The Non-Recoverable Fault x interrupt is disabled.
1	The Non-Recoverable Fault x interrupt is enabled.

Bit 13 – FAULTB Recoverable Fault B Interrupt Enable
Writing a '0' to this bit has no effect.

Downloaded from Arrow.com.

Writing a '1' to this bit will set the Recoverable Fault B Interrupt Disable/Enable bit, which enables the Recoverable Fault B interrupt.

Value	Description
0	The Recoverable Fault B interrupt is disabled.
1	The Recoverable Fault B interrupt is enabled.

Bit 12 – FAULTA Recoverable Fault A Interrupt Enable
Writing a '0' to this bit has no effect.
Writing a '1' to this bit will set the Recoverable Fault A Interrupt Disable/Enable bit, which enables the Recoverable Fault A interrupt.

Value	Description
0	The Recoverable Fault A interrupt is disabled.
1	The Recoverable Fault A interrupt is enabled.

Bit 11 – DFS Non-Recoverable Debug Fault Interrupt Enable
Writing a '0' to this bit has no effect.
Writing a '1' to this bit will set the Debug Fault State Interrupt Disable/Enable bit, which enables the Debug Fault State interrupt.

Value	Description
0	The Debug Fault State interrupt is disabled.
1	The Debug Fault State interrupt is enabled.

Bit 10 – UFS Non-Recoverable Update Fault Interrupt Enable
Writing a zero to this bit has no effect.
Writing a one to this bit will set the Non-Recoverable Update Fault Interrupt Disable/Enable bit, which enables the Non-Recoverable Update Fault interrupt.
Note: This bit is only available on variant L devices. Refer to the *Configuration Summary* for more information.

Value	Description
0	The Non-Recoverable Update Fault interrupt is disabled.
1	The Non-Recoverable Update Fault interrupt is enabled.

Bit 3 – ERR Error Interrupt Enable
Writing a '0' to this bit has no effect.
Writing a '1' to this bit will set the Error Interrupt Disable/Enable bit, which enables the Compare interrupt.

Value	Description
0	The Error interrupt is disabled.
1	The Error interrupt is enabled.

Bit 2 – CNT Counter Interrupt Enable
Writing a '0' to this bit has no effect.
Writing a '1' to this bit will set the Retrigger Interrupt Disable/Enable bit, which enables the Counter interrupt.

Value	Description
0	The Counter interrupt is disabled.
1	The Counter interrupt is enabled.

Bit 1 – TRG Retrigger Interrupt Enable
Writing a '0' to this bit has no effect.
Writing a '1' to this bit will set the Retrigger Interrupt Disable/Enable bit, which enables the Retrigger interrupt.

Value	Description
0	The Retrigger interrupt is disabled.
1	The Retrigger interrupt is enabled.

Bit 0 – OVF Overflow Interrupt Enable
Writing a '0' to this bit has no effect.
Writing a '1' to this bit will set the Overflow Interrupt Disable/Enable bit, which enables the Overflow interrupt request.

Value	Description
0	The Overflow interrupt is disabled.

Downloaded from Arrow.com.

Value	Description
1	The Overflow interrupt is enabled.

Downloaded from Arrow.com.

31.8.12 Interrupt Flag Status and Clear

Name: INTFLAG
Offset: 0x2C
Reset: 0x00000000
Property: -

Bit	31	30	29	28	27	26	25	24
Access								
Reset								

Bit	23	22	21	20	19	18	17	16
					MC3	MC2	MC1	MC0
Access					R/W	R/W	R/W	R/W
Reset					0	0	0	0

Bit	15	14	13	12	11	10	9	8
	FAULT1	FAULT0	FAULTB	FAULTA	DFS	UFS		
Access	R/W	R/W	R/W	R/W	R/W	R/W		
Reset	0	0	0	0	0	0		

Bit	7	6	5	4	3	2	1	0
					ERR	CNT	TRG	OVF
Access					R/W	R/W	R/W	R/W
Reset					0	0	0	0

Bits 16, 17, 18, 19 – MCx Match or Capture Channel x Interrupt Flag
This flag is set on the next CLK_TCC_COUNT cycle after a match with the compare condition or once CCx register contain a valid capture value.
Writing a '0' to one of these bits has no effect.
Writing a '1' to one of these bits will clear the corresponding Match or Capture Channel x interrupt flag
In Capture operation, this flag is automatically cleared when CCx register is read.

Bit 15 – FAULT1 Non-Recoverable Fault x Interrupt Flag
This flag is set on the next CLK_TCC_COUNT cycle after a Non-Recoverable Fault x occurs.
Writing a '0' to this bit has no effect.
Writing a '1' to this bit clears the Non-Recoverable Fault 1 interrupt flag.

Bit 14 – FAULT0 Non-Recoverable Fault x Interrupt Flag
Writing a '0' to this bit has no effect.
Writing a '1' to this bit clears the Non-Recoverable Fault 0 interrupt flag.

Bit 13 – FAULTB Recoverable Fault B Interrupt Flag
This flag is set on the next CLK_TCC_COUNT cycle after a Recoverable Fault B occurs.
Writing a '0' to this bit has no effect.
Writing a '1' to this bit clears the Recoverable Fault B interrupt flag.

Bit 12 – FAULTA Recoverable Fault A Interrupt Flag
This flag is set on the next CLK_TCC_COUNT cycle after a Recoverable Fault B occurs.
Writing a '0' to this bit has no effect.
Writing a '1' to this bit clears the Recoverable Fault B interrupt flag.

Bit 11 – DFS Non-Recoverable Debug Fault State Interrupt Flag
This flag is set on the next CLK_TCC_COUNT cycle after an Debug Fault State occurs.
Writing a '0' to this bit has no effect.

Downloaded from Arrow.com.

Writing a '1' to this bit clears the Debug Fault State interrupt flag.

Bit 10 – UFS Non-Recoverable Update Fault
This flag is set when the RAMP index changes and the Lock Update bit is set (CTRLBSET.LUPD).
Writing a zero to this bit has no effect.
Writing a one to this bit clears the Non-Recoverable Update Fault interrupt flag.
Note: This bit is only available on variant L devices. Refer to the *Configuration Summary* for more information.

Bit 3 – ERR Error Interrupt Flag
This flag is set if a new capture occurs on a channel when the corresponding Match or Capture Channel x interrupt flag is one. In which case there is nowhere to store the new capture.
Writing a '0' to this bit has no effect.
Writing a '1' to this bit clears the error interrupt flag.

Bit 2 – CNT Counter Interrupt Flag
This flag is set on the next CLK_TCC_COUNT cycle after a counter event occurs.
Writing a '0' to this bit has no effect.
Writing a '1' to this bit clears the CNT interrupt flag.

Bit 1 – TRG Retrigger Interrupt Flag
This flag is set on the next CLK_TCC_COUNT cycle after a counter retrigger occurs.
Writing a '0' to this bit has no effect.
Writing a '1' to this bit clears the re-trigger interrupt flag.

Bit 0 – OVF Overflow Interrupt Flag
This flag is set on the next CLK_TCC_COUNT cycle after an overflow condition occurs.
Writing a '0' to this bit has no effect.
Writing a '1' to this bit clears the Overflow interrupt flag.

Downloaded from Arrow.com.

31.8.13 Status

Name: STATUS
Offset: 0x30
Reset: 0x00000001
Property: -

Bit	31	30	29	28	27	26	25	24
					CMP3	CMP2	CMP1	CMP0
Access					R/W	R/W	R/W	R/W
Reset					0	0	0	0

Bit	23	22	21	20	19	18	17	16
					CCBV3	CCBV2	CCBV1	CCBV0
Access					R/W	R/W	R/W	R/W
Reset					0	0	0	0

Bit	15	14	13	12	11	10	9	8
	FAULT1	FAULT0	FAULTB	FAULTA	FAULT1IN	FAULT0IN	FAULTBIN	FAULTAIN
Access	R/W	R/W	R/W	R/W	R	R	R	R
Reset	0	0	0	0	0	0	0	0

Bit	7	6	5	4	3	2	1	0
	PERBV	WAVEBV	PATTBV		DFS	UFS	IDX	STOP
Access	R/W	R/W	R/W		R/W	R/W	R	R
Reset	0	0	0		0	0	0	1

Bits 24, 25, 26, 27 – CMPx Channel x Compare Value
This bit reflects the channel x output compare value.

Value	Description
0	Channel compare output value is 0.
1	Channel compare output value is 1.

Bits 16, 17, 18, 19 – CCBVx Channel x Compare or Capture Buffer Valid
For a compare channel, this bit is set when a new value is written to the corresponding CCBx register. The bit is cleared either by writing a '1' to the corresponding location when CTRLB.LUPD is set, or automatically on an UPDATE condition.
For a capture channel, the bit is set when a valid capture value is stored in the CCBx register. The bit is automatically cleared when the CCx register is read.

Bits 14, 15 – FAULTx Non-recoverable Fault x State
This bit is set by hardware as soon as non-recoverable Fault x condition occurs.
This bit is cleared by writing a one to this bit and when the corresponding FAULTxIN status bit is low.
Once this bit is clear, the timer/counter will restart from the last COUNT value. To restart the timer/counter from BOTTOM, the timer/counter restart command must be executed before clearing the corresponding STATEx bit. For further details on timer/counter commands, refer to available commands description (31.8.3 CTRLBSET.CMD).

Bit 13 – FAULTB Recoverable Fault B State
This bit is set by hardware as soon as recoverable Fault B condition occurs.
This bit can be clear by hardware when Fault B action is resumed, or by writing a '1' to this bit when the corresponding FAULTBIN bit is low. If software halt command is enabled (FAULTB.HALT=SW), clearing this bit will release the timer/counter.

Bit 12 – FAULTA Recoverable Fault A State
This bit is set by hardware as soon as recoverable Fault A condition occurs.

Downloaded from Arrow.com.

This bit can be clear by hardware when Fault A action is resumed, or by writing a '1' to this bit when the corresponding FAULTAIN bit is low. If software halt command is enabled (FAULTA.HALT=SW), clearing this bit will release the timer/counter.

Bit 11 – FAULT1IN Non-Recoverable Fault 1 Input
This bit is set while an active Non-Recoverable Fault 1 input is present.

Bit 10 – FAULT0IN Non-Recoverable Fault 0 Input
This bit is set while an active Non-Recoverable Fault 0 input is present.

Bit 9 – FAULTBIN Recoverable Fault B Input
This bit is set while an active Recoverable Fault B input is present.

Bit 8 – FAULTAIN Recoverable Fault A Input
This bit is set while an active Recoverable Fault A input is present.

Bit 7 – PERBV Period Buffer Valid
This bit is set when a new value is written to the PERB register. This bit is automatically cleared by hardware on UPDATE condition when CTRLB.LUPD is set, or by writing a '1' to this bit.

Bit 6 – WAVEBV Waveform Control Buffer Valid
This bit is set when a new value is written to the WAVEB register. This bit is automatically cleared by hardware on UPDATE condition when CTRLB.LUPD is set, or by writing a '1' to this bit.

Bit 5 – PATTBV Pattern Generator Value Buffer Valid
This bit is set when a new value is written to the PATTB register. This bit is automatically cleared by hardware on UPDATE condition when CTRLB.LUPD is set, or by writing a '1' to this bit.

Bit 3 – DFS Debug Fault State
This bit is set by hardware in Debug mode when DDBGCTRL.FDDBD bit is set. The bit is cleared by writing a '1' to this bit and when the TCC is not in Debug mode.
When the bit is set, the counter is halted and the Waveforms state depend on DRVCTRL.NRE and DRVCTRL.NRV registers.

Bit 2 – UFS Non-recoverable Update Fault State
This bit is set by hardware when the RAMP index changes and the Lock Update bit is set (CTRLBSET.LUPD). The bit is cleared by writing a one to this bit.
When the bit is set, the waveforms state depend on DRVCTRL.NRE and DRVCTRL.NRV registers.

Bit 1 – IDX Ramp Index
In RAMP2 and RAMP2A operation, the bit is cleared during the cycle A and set during the cycle B. In RAMP1 operation, the bit always reads zero. For details on ramp operations, refer to 31.6.3.4 Ramp Operations.

Bit 0 – STOP Stop
This bit is set when the TCC is disabled either on a STOP command or on an UPDATE condition when One-Shot operation mode is enabled (CTRLBSET.ONESHOT=1).
This bit is clear on the next incoming counter increment or decrement.

Value	Description
0	Counter is running.
1	Counter is stopped.

Downloaded from Arrow.com.

31.8.14 Counter Value

Name: COUNT
Offset: 0x34
Reset: 0x00000000
Property: PAC Write-Protection, Write-Synchronized, Read-Synchronized

Note: Prior to any read access, this register must be synchronized by user by writing the according TCC Command value to the Control B Set register (CTRLBSET.CMD=READSYNC).

Bit	31	30	29	28	27	26	25	24
Access								
Reset								

Bit	23	22	21	20	19	18	17	16
	COUNT[23:16]							
Access	R/W	R/W	R/W	R/W	R/W	R/W	R/W	R/W
Reset	0	0	0	0	0	0	0	0

Bit	15	14	13	12	11	10	9	8
	COUNT[15:8]							
Access	R/W	R/W	R/W	R/W	R/W	R/W	R/W	R/W
Reset	0	0	0	0	0	0	0	0

Bit	7	6	5	4	3	2	1	0
	COUNT[7:0]							
Access	R/W	R/W	R/W	R/W	R/W	R/W	R/W	R/W
Reset	0	0	0	0	0	0	0	0

Bits 23:0 – COUNT[23:0] Counter Value
These bits hold the value of the counter register.
Note: When the TCC is configured as 16-bit timer/counter, the excess bits are read zero.

Note: This bit field occupies the MSB of the register, [23:m]. m is dependent on the Resolution bit in the Control A register (CTRLA.RESOLUTION):

CTRLA.RESOLUTION	Bits [23:m]
0x0 - NONE	23:0 (depicted)
0x1 - DITH4	23:4
0x2 - DITH5	23:5
0x3 - DITH6	23:6

Downloaded from Arrow.com.

31.8.15 Pattern

Name: PATT
Offset: 0x38
Reset: 0x0000
Property: Write-Synchronized

Bit	15	14	13	12	11	10	9	8
	PGV7	PGV6	PGV5	PGV4	PGV3	PGV2	PGV1	PGV0
Access	R/W	R/W	R/W	R/W	R/W	R/W	R/W	R/W
Reset	0	0	0	0	0	0	0	0

Bit	7	6	5	4	3	2	1	0
	PGE7	PGE6	PGE5	PGE4	PGE3	PGE2	PGE1	PGE0
Access	R/W	R/W	R/W	R/W	R/W	R/W	R/W	R/W
Reset	0	0	0	0	0	0	0	0

Bits 8, 9, 10, 11, 12, 13, 14, 15 – PGV Pattern Generation Output Value
This register holds the values of pattern for each waveform output.

Bits 0, 1, 2, 3, 4, 5, 6, 7 – PGE Pattern Generation Output Enable
This register holds the enable status of pattern generation for each waveform output. A bit written to '1' will override the corresponding SWAP output with the corresponding PGVn value.

Downloaded from Arrow.com.

31.8.16 Waveform

Name: WAVE
Offset: 0x3C
Reset: 0x00000000
Property: Write-Synchronized

Bit	31	30	29	28	27	26	25	24
					SWAP3	SWAP2	SWAP1	SWAP0
Access					R/W	R/W	R/W	R/W
Reset					0	0	0	0

Bit	23	22	21	20	19	18	17	16
					POL3	POL2	POL1	POL0
Access					R/W	R/W	R/W	R/W
Reset					0	0	0	0

Bit	15	14	13	12	11	10	9	8
					CICCEN3	CICCEN2	CICCEN1	CICCEN0
Access					R/W	R/W	R/W	R/W
Reset					0	0	0	0

Bit	7	6	5	4	3	2	1	0
	CIPEREN		RAMP[1:0]			WAVEGEN[2:0]		
Access	R/W		R/W	R/W		R/W	R/W	R/W
Reset	0		0	0		0	0	0

Bits 24, 25, 26, 27 – SWAP Swap DTI Output Pair x
Setting these bits enables output swap of DTI outputs [x] and [x+WO_NUM/2]. Note the DTIxEN settings will not affect the swap operation.

Bits 16, 17, 18, 19 – POL Channel Polarity x
Setting these bits enables the output polarity in single-slope and dual-slope PWM operations.

Value	Name	Description
0	(single-slope PWM waveform generation)	Compare output is initialized to ~DIR and set to DIR when TCC counter matches CCx value
1	(single-slope PWM waveform generation)	Compare output is initialized to DIR and set to ~DIR when TCC counter matches CCx value.
0	(dual-slope PWM waveform generation)	Compare output is set to ~DIR when TCC counter matches CCx value
1	(dual-slope PWM waveform generation)	Compare output is set to DIR when TCC counter matches CCx value.

Bits 8, 9, 10, 11 – CICCEN Circular CC Enable x
Setting this bits enables the compare circular buffer option on channel. When the bit is set, CCx register value is copied-back into the CCx register on UPDATE condition.

Bit 7 – CIPEREN Circular Period Enable
Setting this bits enable the period circular buffer option. When the bit is set, the PER register value is copied-back into the PERB register on UPDATE condition.

Bits 5:4 – RAMP[1:0] Ramp Operation
These bits select Ramp operation (RAMP). These bits are not synchronized.

Value	Name	Description
0x0	RAMP1	RAMP1 operation
0x1	RAMP2A	Alternative RAMP2 operation

Downloaded from Arrow.com.

Value	Name	Description
0x2	RAMP2	RAMP2 operation
0x3	RAMP2C. This bit is only available in variant L devices. Refer to *Configuration Summary* for more information.	Critical RAMP2 operation
0x4	-	Reserved

Bits 2:0 – WAVEGEN[2:0] Waveform Generation Operation
These bits select the waveform generation operation. The settings impact the top value and control if frequency or PWM waveform generation should be used. These bits are not synchronized.

Value	Name	Description						
		Operation	Top	Update	Waveform Output On Match	Waveform Output On Update	OVFIF/Event Up Down	
0x0	NFRQ	Normal Frequency	PER	TOP/Zero	Toggle	Stable	TOP	Zero
0x1	MFRQ	Match Frequency	CC0	TOP/Zero	Toggle	Stable	TOP	Zero
0x2	NPWM	Normal PWM	PER	TOP/Zero	Set	Clear	TOP	Zero
0x3	Reserved	-	-	-	-	-	-	-
0x4	DSCRITICAL	Dual-slope PWM	PER	Zero	~DIR	Stable	–	Zero
0x5	DSBOTTOM	Dual-slope PWM	PER	Zero	~DIR	Stable	–	Zero
0x6	DSBOTH	Dual-slope PWM	PER	TOP & Zero	~DIR	Stable	TOP	Zero
0x7	DSTOP	Dual-slope PWM	PER	Zero	~DIR	Stable	TOP	–

Downloaded from Arrow.com.

31.8.17 Period Value

Name: PER
Offset: 0x40
Reset: 0xFFFFFFFF
Property: Write-Synchronized

Bit	31	30	29	28	27	26	25	24
Access								
Reset								

Bit	23	22	21	20	19	18	17	16
	PER[17:10]							
Access	R/W	R/W	R/W	R/W	R/W	R/W	R/W	R/W
Reset	1	1	1	1	1	1	1	1

Bit	15	14	13	12	11	10	9	8
	PER[9:2]							
Access	R/W	R/W	R/W	R/W	R/W	R/W	R/W	R/W
Reset	1	1	1	1	1	1	1	1

Bit	7	6	5	4	3	2	1	0
	PER[1:0]		DITHER[5:0]					
Access	R/W	R/W	R/W	R/W	R/W	R/W	R/W	R/W
Reset	1	1	1	1	1	1	1	1

Bits 23:6 – PER[17:0] Period Value
These bits hold the value of the period buffer register.
Note: When the TCC is configured as 16-bit timer/counter, the excess bits are read zero.

Note: This bit field occupies the MSB of the register, [23:m]. m is dependent on the Resolution bit in the Control A register (CTRLA.RESOLUTION):

CTRLA.RESOLUTION	Bits [23:m]
0x0 - NONE	23:0
0x1 - DITH4	23:4
0x2 - DITH5	23:5
0x3 - DITH6	23:6 (depicted)

Bits 5:0 – DITHER[5:0] Dithering Cycle Number
These bits hold the number of extra cycles that are added on the PWM pulse period every 64 PWM frames.
Note: This bit field consists of the n LSB of the register. n is dependent on the value of the Resolution bits in the Control A register (CTRLA.RESOLUTION):

CTRLA.RESOLUTION	Bits [n:0]
0x0 - NONE	-
0x1 - DITH4	3:0
0x2 - DITH5	4:0
0x3 - DITH6	5:0 (depicted)

Downloaded from Arrow.com.

31.8.18 Compare/Capture Channel x

Name: CC
Offset: 0x44 + n*0x04 [n=0..3]
Reset: 0x00000000
Property: Write-Synchronized, Read-Synchronized

The CCx register represents the 16-, 24- bit value, CCx. The register has two functions, depending of the mode of operation.

For capture operation, this register represents the second buffer level and access point for the CPU and DMA.

For compare operation, this register is continuously compared to the counter value. Normally, the output form the comparator is then used for generating waveforms.

CCx register is updated with the buffer value from their corresponding CCBx register when an UPDATE condition occurs.

In addition, in match frequency operation, the CC0 register controls the counter period.

Bit	31	30	29	28	27	26	25	24
Access								
Reset								

Bit	23	22	21	20	19	18	17	16
	CC[17:10]							
Access	R/W	R/W	R/W	R/W	R/W	R/W	R/W	R/W
Reset	0	0	0	0	0	0	0	0

Bit	15	14	13	12	11	10	9	8
	CC[9:2]							
Access	R/W	R/W	R/W	R/W	R/W	R/W	R/W	R/W
Reset	0	0	0	0	0	0	0	0

Bit	7	6	5	4	3	2	1	0
	CC[1:0]		DITHER[5:0]					
Access	R/W	R/W	R/W	R/W	R/W	R/W	R/W	R/W
Reset	0	0	0	0	0	0	0	0

Bits 23:6 – CC[17:0] Channel x Compare/Capture Value
These bits hold the value of the Channel x compare/capture register.
Note: When the TCC is configured as 16-bit timer/counter, the excess bits are read zero.

Note: This bit field occupies the m MSB of the register, [23:m]. m is dependent on the Resolution bit in the Control A register (CTRLA.RESOLUTION):

CTRLA.RESOLUTION	Bits [23:m]
0x0 - NONE	23:0
0x1 - DITH4	23:4
0x2 - DITH5	23:5
0x3 - DITH6	23:6 (depicted)

Bits 5:0 – DITHER[5:0] Dithering Cycle Number
These bits hold the number of extra cycles that are added on the PWM pulse width every 64 PWM frames.

Downloaded from Arrow.com.

Note: This bit field consists of the n LSB of the register. n is dependent on the value of the Resolution bits in the Control A register (CTRLA.RESOLUTION):

CTRLA.RESOLUTION	Bits [n:0]
0x0 - NONE	-
0x1 - DITH4	3:0
0x2 - DITH5	4:0
0x3 - DITH6	5:0 (depicted)

Downloaded from Arrow.com.

31.8.19 Pattern Buffer

Name: PATTB
Offset: 0x64
Reset: 0x0000
Property: Write-Synchronized, Read-Synchronized

Bit	15	14	13	12	11	10	9	8
	PGVB7	PGVB6	PGVB5	PGVB4	PGVB3	PGVB2	PGVB1	PGVB0
Access	R/W	R/W	R/W	R/W	R/W	R/W	R/W	R/W
Reset	0	0	0	0	0	0	0	0

Bit	7	6	5	4	3	2	1	0
	PGEB7	PGEB6	PGEB5	PGEB4	PGEB3	PGEB2	PGEB1	PGEB0
Access	R/W	R/W	R/W	R/W	R/W	R/W	R/W	R/W
Reset	0	0	0	0	0	0	0	0

Bits 8, 9, 10, 11, 12, 13, 14, 15 – PGVB Pattern Generation Output Value Buffer
This register is the buffer for the PGV register. If double buffering is used, valid content in this register is copied to the PGV register on an UPDATE condition.

Bits 0, 1, 2, 3, 4, 5, 6, 7 – PGEB Pattern Generation Output Enable Buffer
This register is the buffer of the PGE register. If double buffering is used, valid content in this register is copied into the PGE register at an UPDATE condition.

Downloaded from Arrow.com.

31.8.20 Waveform Buffer

Name: WAVEB
Offset: 0x68
Reset: 0x00000000
Property: Write-Synchronized, Read-Synchronized

Bit	31	30	29	28	27	26	25	24
					SWAPB 3	SWAPB 2	SWAPB 1	SWAPB 0
Access					R/W	R/W	R/W	R/W
Reset					0	0	0	0

Bit	23	22	21	20	19	18	17	16
					POLB3	POLB2	POLB1	POLB0
Access					R/W	R/W	R/W	R/W
Reset					0	0	0	0

Bit	15	14	13	12	11	10	9	8
					CICCENB3	CICCENB2	CICCENB1	CICCENB0
Access					R/W	R/W	R/W	R/W
Reset					0	0	0	0

Bit	7	6	5	4	3	2	1	0
	CIPERENB		RAMPB[1:0]			WAVEGENB[2:0]		
Access	R/W		R/W	R/W		R/W	R/W	R/W
Reset	0		0	0		0	0	0

Bits 24, 25, 26, 27 – SWAPB Swap DTI output pair x Buffer
These register bits are the buffer bits for the SWAP register bits. If double buffering is used, valid content in these bits is copied to the corresponding SWAPx bits on an UPDATE condition.

Bits 16, 17, 18, 19 – POLB Channel Polarity x Buffer
These register bits are the buffer bits for POLx register bits. If double buffering is used, valid content in these bits is copied to the corresponding POBx bits on an UPDATE condition.

Bits 8, 9, 10, 11 – CICCENB Circular CCx Buffer Enable
These register bits are the buffer bits for CICCENx register bits. If double buffering is used, valid content in these bits is copied to the corresponding CICCENx bits on a UPDATE condition.

Bit 7 – CIPERENB Circular Period Enable Buffer
This register bit is the buffer bit for CIPEREN register bit. If double buffering is used, valid content in this bit is copied to the corresponding CIPEREN bit on a UPDATE condition.

Bits 5:4 – RAMPB[1:0] Ramp Operation Buffer
These register bits are the buffer bits for RAMP register bits. If double buffering is used, valid content in these bits is copied to the corresponding RAMP bits on a UPDATE condition.

Value	Name	Description
0x0	RAMP1	RAMP1 operation
0x1	RAMP2A	Alternative RAMP2 operation
0x2	RAMP2	RAMP2 operation
0x3	RAMP2C. This bit is only available in variant L devices. Refer to *Configuration Summary* for more information.	Critical RAMP2 operation
0x4	-	Reserved

Downloaded from Arrow.com.

Bits 2:0 – WAVEGENB[2:0] Waveform Generation Operation Buffer
These register bits are the buffer bits for WAVEGEN register bits. If double buffering is used, valid content in these bits is copied to the corresponding WAVEGEN bits on a UPDATE condition.

Value	Name	Description						
		Operation	Top	Update	Waveform Output On Match	Waveform Output On Update	OVFIF/Event Up Down	
0x0	NFRQ	Normal Frequency	PER	TOP/Zero	Toggle	Stable	TOP	Zero
0x1	MFRQ	Match Frequency	CC0	TOP/Zero	Toggle	Stable	TOP	Zero
0x2	NPWM	Normal PWM	PER	TOP/Zero	Set	Clear	TOP	Zero
0x3	Reserved	-	-	-	-	-	-	-
0x4	DSCRITICAL	Dual-slope PWM	PER	Zero	~DIR	Stable	–	Zero
0x5	DSBOTTOM	Dual-slope PWM	PER	Zero	~DIR	Stable	–	Zero
0x6	DSBOTH	Dual-slope PWM	PER	TOP & Zero	~DIR	Stable	TOP	Zero
0x7	DSTOP	Dual-slope PWM	PER	Zero	~DIR	Stable	TOP	–

Downloaded from Arrow.com.

31.8.21 Period Buffer Value

Name: PERB
Offset: 0x6C
Reset: 0xFFFFFFFF
Property: Write-Synchronized, Read-Synchronized

Bit	31	30	29	28	27	26	25	24
Access								
Reset								

Bit	23	22	21	20	19	18	17	16
	PERB[17:10]							
Access	R/W	R/W	R/W	R/W	R/W	R/W	R/W	R/W
Reset	1	1	1	1	1	1	1	1

Bit	15	14	13	12	11	10	9	8
	PERB[9:2]							
Access	R/W	R/W	R/W	R/W	R/W	R/W	R/W	R/W
Reset	1	1	1	1	1	1	1	1

Bit	7	6	5	4	3	2	1	0
	PERB[1:0]		DITHERB[5:0]					
Access	R/W	R/W	R/W	R/W	R/W	R/W	R/W	R/W
Reset	1	1	1	1	1	1	1	1

Bits 23:6 – PERB[17:0] Period Buffer Value
These bits hold the value of the period buffer register. The value is copied to PER register on UPDATE condition.
Note: When the TCC is configured as 16-bit timer/counter, the excess bits are read zero.

Note: This bit field occupies the MSB of the register, [23:m]. m is dependent on the Resolution bit in the Control A register (CTRLA.RESOLUTION):

CTRLA.RESOLUTION	Bits [23:m]
0x0 - NONE	23:0
0x1 - DITH4	23:4
0x2 - DITH5	23:5
0x3 - DITH6	23:6 (depicted)

Bits 5:0 – DITHERB[5:0] Dithering Buffer Cycle Number
These bits represent the PER.DITHER bits buffer. When the double buffering is enabled, the value of this bit field is copied to the PER.DITHER bits on an UPDATE condition.
Note: This bit field consists of the n LSB of the register. n is dependent on the value of the Resolution bits in the Control A register (CTRLA.RESOLUTION):

CTRLA.RESOLUTION	Bits [n:0]
0x0 - NONE	-
0x1 - DITH4	3:0
0x2 - DITH5	4:0
0x3 - DITH6	5:0 (depicted)

Downloaded from Arrow.com.

31.8.22 Channel x Compare/Capture Buffer Value

Name: CCB
Offset: 0x70 + n*0x04 [n=0..3]
Reset: 0x00000000
Property: Write-Synchronized, Read-Synchronized

CCBx is copied into CCx at TCC update time

Bit	31	30	29	28	27	26	25	24
Access								
Reset								

Bit	23	22	21	20	19	18	17	16
	CCB[17:10]							
Access	R/W	R/W	R/W	R/W	R/W	R/W	R/W	R/W
Reset	0	0	0	0	0	0	0	0

Bit	15	14	13	12	11	10	9	8
	CCB[9:2]							
Access	R/W	R/W	R/W	R/W	R/W	R/W	R/W	R/W
Reset	0	0	0	0	0	0	0	0

Bit	7	6	5	4	3	2	1	0
	CCB[1:0]		DITHERB[5:0]					
Access	R/W	R/W	R/W	R/W	R/W	R/W	R/W	R/W
Reset	0	0	0	0	0	0	0	0

Bits 23:6 – CCB[17:0] Channel x Compare/Capture Buffer Value
These bits hold the value of the Channel x Compare/Capture Buffer Value register. The register serves as the buffer for the associated compare or capture registers (CCx). Accessing this register using the CPU or DMA will affect the corresponding CCBVx status bit.
Note: When the TCC is configured as 16-bit timer/counter, the excess bits are read zero.

Note: This bit field occupies the MSB of the register, [23:m]. m is dependent on the Resolution bit in the Control A register (CTRLA.RESOLUTION):

CTRLA.RESOLUTION	Bits [23:m]
0x0 - NONE	23:0
0x1 - DITH4	23:4
0x2 - DITH5	23:5
0x3 - DITH6	23:6 (depicted)

Bits 5:0 – DITHERB[5:0] Dithering Buffer Cycle Number
These bits represent the CCx.DITHER bits buffer. When the double buffering is enable, DITHERBUF bits value is copied to the CCx.DITHER bits on an UPDATE condition.
Note: This bit field consists of the n LSB of the register. n is dependent on the value of the Resolution bits in the Control A register (CTRLA.RESOLUTION):

CTRLA.RESOLUTION	Bits [n:0]
0x0 - NONE	-
0x1 - DITH4	3:0
0x2 - DITH5	4:0
0x3 - DITH6	5:0 (depicted)

Downloaded from Arrow.com.

32. USB – Universal Serial Bus

32.1 Overview

The Universal Serial Bus interface (USB) module complies with the Universal Serial Bus (USB) 2.1 specification supporting both device and embedded host modes.

The USB device mode supports 8 endpoint addresses. All endpoint addresses have one input and one output endpoint, for a total of 16 endpoints. Each endpoint is fully configurable in any of the four transfer types: control, interrupt, bulk or isochronous. The USB host mode supports up to 8 pipes. The maximum data payload size is selectable up to 1023 bytes.

Internal SRAM is used to keep the configuration and data buffer for each endpoint. The memory locations used for the endpoint configurations and data buffers is fully configurable. The amount of memory allocated is dynamic according to the number of endpoints in use, and the configuration of these. The USB module has a built-in Direct Memory Access (DMA) and will read/write data from/to the system RAM when a USB transaction takes place. No CPU or DMA Controller resources are required.

To maximize throughput, an endpoint can be configured for ping-pong operation. When this is done the input and output endpoint with the same address are used in the same direction. The CPU or DMA Controller can then read/write one data buffer while the USB module writes/reads from the other buffer. This gives double buffered communication.

Multi-packet transfer enables a data payload exceeding the maximum packet size of an endpoint to be transferred as multiple packets without any software intervention. This reduces the number of interrupts and software intervention needed for USB transfers.

For low power operation the USB module can put the microcontroller in any sleep mode when the USB bus is idle and a suspend condition is given. Upon bus resume, the USB module can wake the microcontroller from any sleep mode.

32.2 Features

- Compatible with the USB 2.1 specification
- USB Embedded Host and Device mode
- Supports full (12Mbit/s) and low (1.5Mbit/s) speed communication
- Supports Link Power Management (LPM-L1) protocol
- On-chip transceivers with built-in pull-ups and pull-downs
- On-Chip USB serial resistors
- 1kHz SOF clock available on external pin
- Device mode
  - Supports 8 IN endpoints and 8 OUT endpoints
  - No endpoint size limitations
  - Built-in DMA with multi-packet and dual bank for all endpoints
  - Supports feedback endpoint
  - Supports crystal less clock
- Host mode
  - Supports 8 physical pipes
  - No pipe size limitations
  - Supports multiplexed virtual pipe on one physical pipe to allow an unlimited USB tree
  - Built-in DMA with multi-packet support and dual bank for all pipes
  - Supports feedback endpoint
  - Supports the USB 2.0 Phase-locked SOFs feature

Downloaded from Arrow.com.

32.3 USB Block Diagram

Figure 32-1. LS/FS Implementation: USB Block Diagram

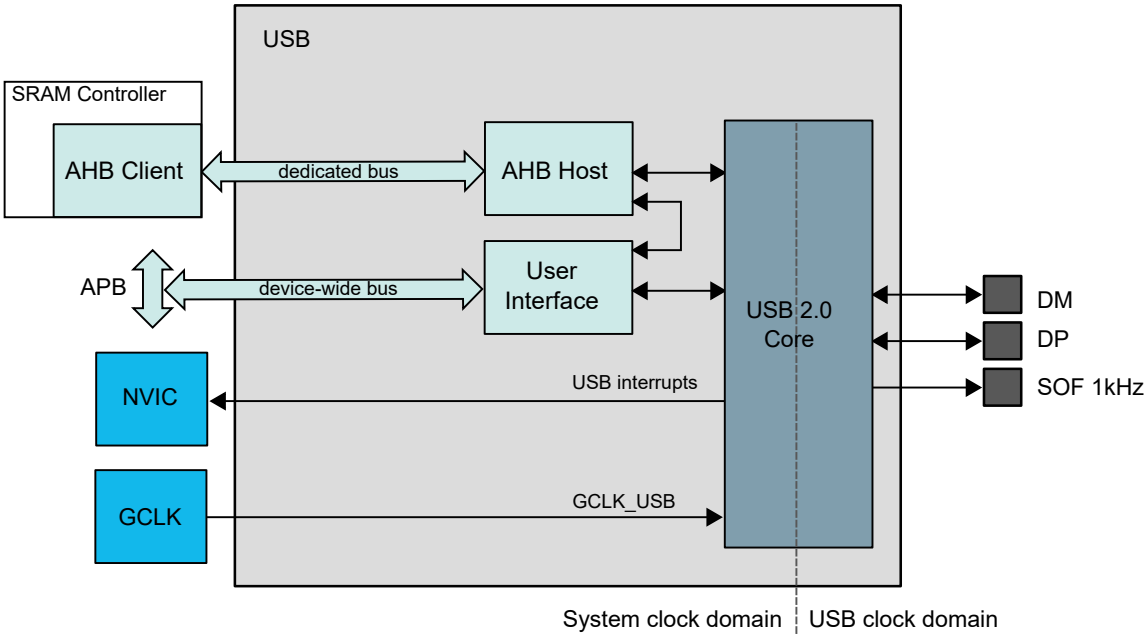

32.4 Signal Description

Pin Name	Pin Description	Type
DM	Data -: Differential Data Line - Port	Input/Output
DP	Data +: Differential Data Line + Port	Input/Output
SOF 1kHZ	SOF Output	Output

Refer to *I/O Multiplexing and Considerations* for details on the pin mapping for this peripheral. One signal can be mapped on several pins.

Related Links

7. I/O Multiplexing and Considerations

32.5 Product Dependencies

In order to use this peripheral module, other parts of the system must be configured correctly, as described below.

32.5.1 I/O Lines

The USB pins may be multiplexed with the I/O lines Controller. The user must first configure the I/O Controller to assign the USB pins to their peripheral functions.

A 1kHz SOF clock is available on an external pin. The user must first configure the I/O Controller to assign the 1kHz SOF clock to the peripheral function. The SOF clock is available for device and host mode.

32.5.2 Power Management

This peripheral can continue to operate in any sleep mode where its source clock is running. The interrupts can wake up the device from sleep modes. Events connected to the event system can trigger other operations in the system without exiting sleep modes.

Downloaded from Arrow.com.

Related Links

16. PM – Power Manager

32.5.3 Clocks

The USB bus clock (CLK_USB_AHB) can be enabled and disabled in the Main Clock module, MCLK, and the default state of CLK_USB_AHB can be found in the *Peripheral Clock Masking*.

A generic clock (GCLK_USB) is required to clock the USB. This clock must be configured and enabled in the Generic Clock Controller before using the USB.

This generic clock is asynchronous to the bus clock (CLK_USB_AHB). Due to this asynchronicity, writes to certain registers will require synchronization between the clock domains.

The USB module requires a GCLK_USB of 48 MHz ± 0.25% clock for low speed and full speed operation. To follow the USB data rate at 12 Mbit/s in full-speed mode, the CLK_USB_AHB clock should be at minimum 8 MHz.

Clock recovery is achieved by a digital phase-locked loop in the USB module, which complies with the USB jitter specifications. If crystal-less operation is used in USB device mode, refer to *USB Clock Recovery Module*.

Related Links

15. GCLK - Generic Clock Controller

16.6.2.6 Peripheral Clock Masking

15.6.6 Synchronization

32.5.4 DMA

The USB has a built-in Direct Memory Access (DMA) and will read/write data to/from the system RAM when a USB transaction takes place. No CPU or DMA Controller resources are required.

32.5.5 Interrupts

The interrupt request line is connected to the Interrupt Controller. In order to use interrupt requests of this peripheral, the Interrupt Controller (NVIC) must be configured first. Refer to *Nested Vector Interrupt Controller* for details.

Related Links

11.2 Nested Vector Interrupt Controller

32.5.6 Events

Not applicable.

32.5.7 Debug Operation

When the CPU is halted in debug mode the USB peripheral continues normal operation. If the USB peripheral is configured in a way that requires it to be periodically serviced by the CPU through interrupts or similar, improper operation or data loss may result during debugging.

32.5.8 Register Access Protection

Registers with write-access can be optionally write-protected by the Peripheral Access Controller (PAC), except for the following:

- Device Interrupt Flag (INTFLAG) register
- Endpoint Interrupt Flag (EPINTFLAG) register
- Host Interrupt Flag (INTFLAG) register
- Pipe Interrupt Flag (PINTFLAG) register

Note: Optional write-protection is indicated by the "PAC Write-Protection" property in the register description.

Write-protection does not apply for accesses through an external debugger.

32.5.9 Analog Connections

Not applicable.

Downloaded from Arrow.com.

32.5.10 Calibration

The output drivers for the DP/DM USB line interface can be fine tuned with calibration values from production tests. The calibration values must be loaded from the NVM Software Calibration Area into the USB Pad Calibration register (PADCAL) by software, before enabling the USB, to achieve the specified accuracy. Refer to *NVM Software Calibration Area Mapping* for further details.

For additional information on Pad Calibration, refer to the Pad Calibration (PADCAL) register.

Related Links

10.3.2 NVM Software Calibration Area Mapping

32.6 Functional Description

32.6.1 USB General Operation

32.6.1.1 Initialization

After a hardware reset, the USB is disabled. The user should first enable the USB (CTRLA.ENABLE) in either device mode or host mode (CTRLA.MODE).

Figure 32-2. General States

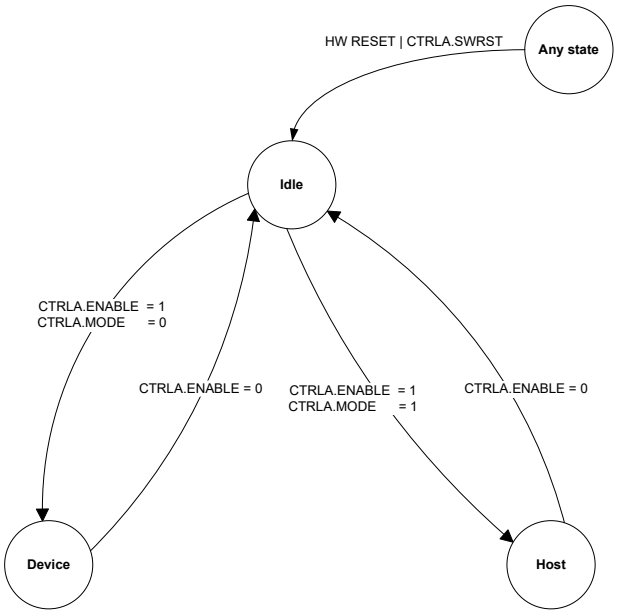

After a hardware reset, the USB is in the idle state. In this state:

- The module is disabled. The USB Enable bit in the Control A register (CTRLA.ENABLE) is reset.
- The module clock is stopped in order to minimize power consumption.
- The USB pad is in suspend mode.
- The internal states and registers of the device and host are reset.

Downloaded from Arrow.com.

Before using the USB, the Pad Calibration register (PADCAL) must be loaded with production calibration values from the NVM Software Calibration Area.

The USB is enabled by writing a '1' to CTRLA.ENABLE. The USB is disabled by writing a '0' to CTRLA.ENABLE.

The USB is reset by writing a '1' to the Software Reset bit in CTRLA (CTRLA.SWRST). All registers in the USB will be reset to their initial state, and the USB will be disabled. Refer to the CTRLA register for details.

The user can configure pads and speed before enabling the USB by writing to the Operating Mode bit in the Control A register (CTRLA.MODE) and the Speed Configuration field in the Control B register (CTRLB.SPDCONF). These values are taken into account once the USB has been enabled by writing a '1' to CTRLA.ENABLE.

After writing a '1' to CTRLA.ENABLE, the USB enters device mode or host mode (according to CTRLA.MODE).

The USB can be disabled at any time by writing a '0' to CTRLA.ENABLE.

Refer to 32.6.2 USB Device Operations for the basic operation of the device mode.

Refer to 32.6.3 Host Operations for the basic operation of the host mode.

Related Links

10.3.2 NVM Software Calibration Area Mapping

32.6.2 USB Device Operations

This section gives an overview of the USB module device operation during normal transactions. For more details on general USB and USB protocol, refer to the Universal Serial Bus specification revision 2.1.

32.6.2.1 Initialization

To attach the USB device to start the USB communications from the USB host, a zero should be written to the Detach bit in the Device Control B register (CTRLB.DETACH). To detach the device from the USB host, a one must be written to the CTRLB.DETACH.

After the device is attached, the host will request the USB device descriptor using the default device address zero. On successful transmission, it will send a USB reset. After that, it sends an address to be configured for the device. All further transactions will be directed to this device address. This address should be configured in the Device Address field in the Device Address register (DADD.DADD) and the Address Enable bit in DADD (DADD.ADDEN) should be written to one to accept communications directed to this address. DADD.ADDEN is automatically cleared on receiving a USB reset.

32.6.2.2 Endpoint Configuration

Endpoint data can be placed anywhere in the device RAM. The USB controller accesses these endpoints directly through the AHB host (built-in DMA) with the help of the endpoint descriptors. The base address of the endpoint descriptors needs to be written in the Descriptor Address register (DESCADD) by the user. For additional information, refer to Endpoint Description Structure.

Before using an endpoint, the user should configure the direction and type of the endpoint in Type of Endpoint field in the Device Endpoint Configuration register (EPCFG.EPTYPE0/1). The endpoint descriptor registers should be initialized to known values before using the endpoint, so that the USB controller does not read random values from the RAM.

The Endpoint Size field in the Packet Size register (PCKSIZE.SIZE) should be configured as per the size reported to the host for that endpoint. The Address of Data Buffer register (ADDR) should be set to the data buffer used for endpoint transfers.

The RAM Access Interrupt bit in Device Interrupt Flag register (INTFLAG.RAMACER) is set when a RAM access underflow error occurs during IN data stage.

When an endpoint is disabled, the following registers are cleared for that endpoint:

- Device Endpoint Interrupt Enable Clear/Set (EPINTENCLR/SET) register
- Device Endpoint Interrupt Flag (EPINTFLAG) register
- Transmit Stall 0 bit in the Endpoint Status register (EPSTATUS.STALLRQ0)
- Transmit Stall 1 bit in the Endpoint Status register (EPSTATUS.STALLRQ1)

Downloaded from Arrow.com.

32.6.2.3 Multi-Packet Transfers

Multi-packet transfer enables a data payload exceeding the endpoint maximum transfer size to be transferred as multiple packets without software intervention. This reduces the number of interrupts and software intervention required to manage higher level USB transfers. Multi-packet transfer is identical to the IN and OUT transactions described below unless otherwise noted in this section.

The application software provides the size and address of the RAM buffer to be proceeded by the USB module for a specific endpoint, and the USB module will split the buffer in the required USB data transfers without any software intervention.

Figure 32-3. Multi-Packet Feature - Reduction of CPU Overhead

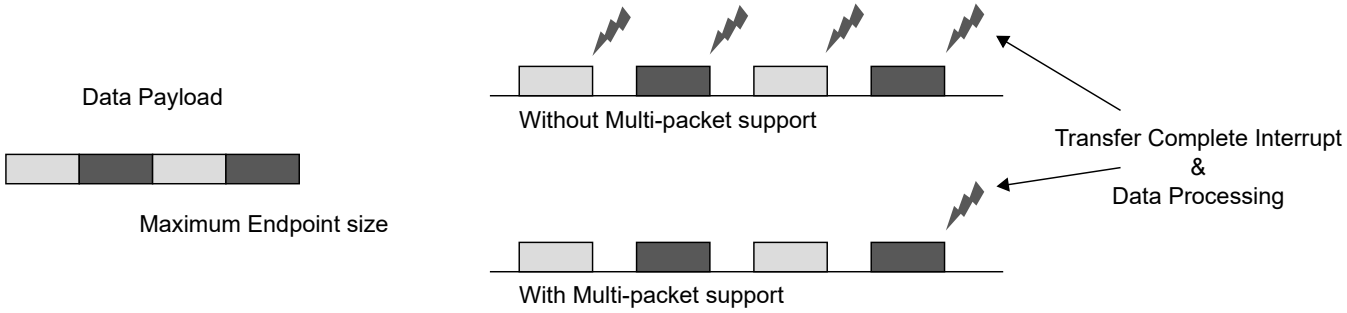

32.6.2.4 USB Reset

The USB bus reset is initiated by a connected host and managed by hardware.

During USB reset the following registers are cleared:

- Device Endpoint Configuration (EPCFG) register - except for Endpoint 0
- Device Frame Number (FNUM) register
- Device Address (DADD) register
- Device Endpoint Interrupt Enable Clear/Set (EPINTENCLR/SET) register
- Device Endpoint Interrupt Flag (EPINTFLAG) register
- Transmit Stall 0 bit in the Endpoint Status register (EPSTATUS.STALLRQ0)
- Transmit Stall 1 bit in the Endpoint Status register (EPSTATUS.STALLRQ1)
- Endpoint Interrupt Summary (EPINTSMRY) register
- Upstream resume bit in the Control B register (CTRLB.UPRSM)

At the end of the reset process, the End of Reset bit is set in the Interrupt Flag register (INTFLAG.EORST).

32.6.2.5 Start-of-Frame

When a Start-of-Frame (SOF) token is detected, the frame number from the token is stored in the Frame Number field in the Device Frame Number register (FNUM.FNUM), and the Start-of-Frame interrupt bit in the Device Interrupt Flag register (INTFLAG.SOF) is set. If there is a CRC or bit-stuff error, the Frame Number Error status flag (FNUM.FNCERR) in the FNUM register is set.

32.6.2.6 Management of SETUP Transactions

When a SETUP token is detected and the device address of the token packet does not match DADD.DADD, the packet is discarded and the USB module returns to idle and waits for the next token packet.

When the address matches, the USB module checks if the endpoint is enabled in EPCFG. If the addressed endpoint is disabled, the packet is discarded and the USB module returns to idle and waits for the next token packet.

When the endpoint is enabled, the USB module then checks on the EPCFG of the addressed endpoint. If the EPCFG.EPTYPE0 is not set to control, the USB module returns to idle and waits for the next token packet.

When the EPCFG.EPTYPE0 matches, the USB module then fetches the Data Buffer Address (ADDR) from the addressed endpoint's descriptor and waits for a DATA0 packet. If a PID error or any other PID than DATA0 is detected, the USB module returns to idle and waits for the next token packet.

Downloaded from Arrow.com.

When the data PID matches and if the Received Setup Complete interrupt bit in the Device Endpoint Interrupt Flag register (EPINTFLAG.RXSTP) is equal to zero, ignoring the Bank 0 Ready bit in the Device Endpoint Status register (EPSTATUS.BK0RDY), the incoming data is written to the data buffer pointed to by the Data Buffer Address (ADDR). If the number of received data bytes exceeds the endpoint's maximum data payload size as specified by the PCKSIZE.SIZE, the remainders of the received data bytes are discarded. The packet will still be checked for bit-stuff and CRC errors. Software must never report a endpoint size to the host that is greater than the value configured in PCKSIZE.SIZE. If a bit-stuff or CRC error is detected in the packet, the USB module returns to idle and waits for the next token packet.

If data is successfully received, an ACK handshake is returned to the host, and the number of received data bytes, excluding the CRC, is written to the Byte Count (PCKSIZE.BYTE_COUNT). If the number of received data bytes is the maximum data payload specified by PCKSIZE.SIZE, no CRC data is written to the data buffer. If the number of received data bytes is the maximum data payload specified by PCKSIZE.SIZE minus one, only the first CRC data is written to the data buffer. If the number of received data is equal or less than the data payload specified by PCKSIZE.SIZE minus two, both CRC data bytes are written to the data buffer.

Finally the EPSTATUS is updated. Data Toggle OUT bit (EPSTATUS.DTGLOUT), the Data Toggle IN bit (EPSTATUS.DTGLIN), the current bank bit (EPSTATUS.CURRBK) and the Bank Ready 0 bit (EPSTATUS.BK0RDY) are set. Bank Ready 1 bit (EPSTATUS.BK1RDY) and the Stall Bank 0/1 bit (EPSTATUS.STALLQR0/1) are cleared on receiving the SETUP request. The RXSTP bit is set and triggers an interrupt if the Received Setup Interrupt Enable bit is set in Endpoint Interrupt Enable Set/Clear register (EPINTENSET/CLR.RXSTP).

32.6.2.7 Management of OUT Transactions

Figure 32-4. OUT Transfer: Data Packet Host to USB Device

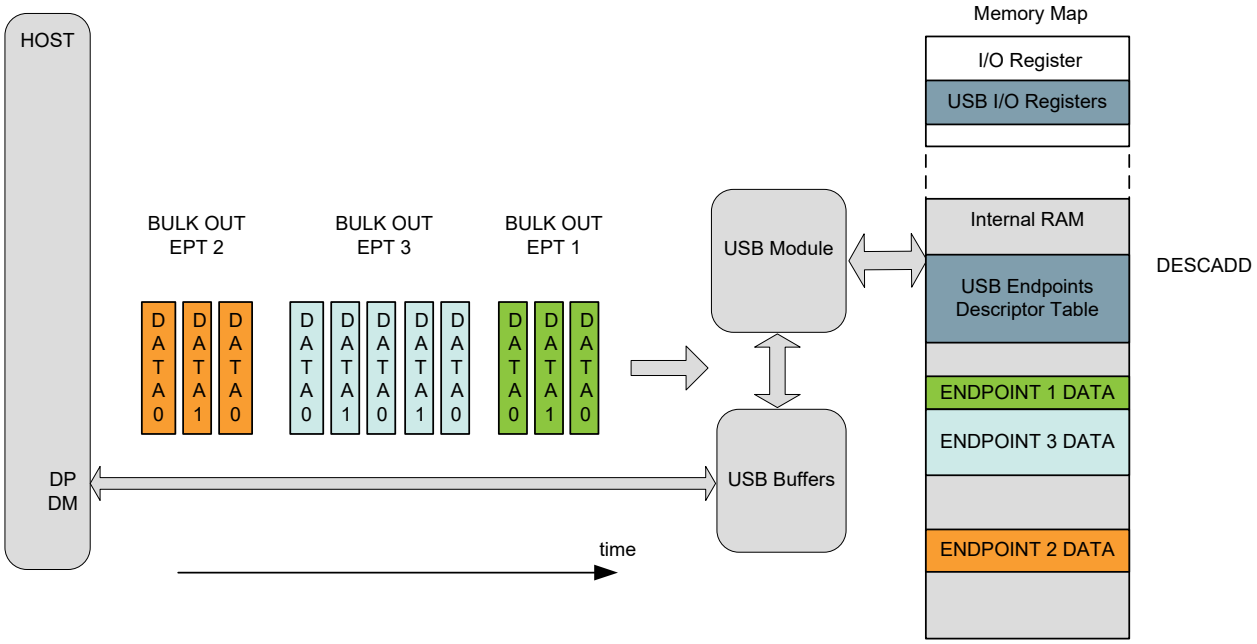

When an OUT token is detected, and the device address of the token packet does not match DADD.DADD, the packet is discarded and the USB module returns to idle and waits for the next token packet.

If the address matches, the USB module checks if the endpoint number received is enabled in the EPCFG of the addressed endpoint. If the addressed endpoint is disabled, the packet is discarded and the USB module returns to idle and waits for the next token packet.

When the endpoint is enabled, the USB module then checks the Endpoint Configuration register (EPCFG) of the addressed output endpoint. If the type of the endpoint (EPCFG.EPTYPE0) is not set to OUT, the USB module returns to idle and waits for the next token packet.

The USB module then fetches the Data Buffer Address (ADDR) from the addressed endpoint's descriptor, and waits for a DATA0 or DATA1 packet. If a PID error or any other PID than DATA0 or DATA1 is detected, the USB module returns to idle and waits for the next token packet.

Downloaded from Arrow.com.

If EPSTATUS.STALLRQ0 in EPSTATUS is set, the incoming data is discarded. If the endpoint is not isochronous, a STALL handshake is returned to the host and the Transmit Stall Bank 0 interrupt bit in EPINTFLAG (EPINTFLAG.STALL0) is set.

For isochronous endpoints, data from both a DATA0 and DATA1 packet will be accepted. For other endpoint types the PID is checked against EPSTATUS.DTGLOUT. If a PID mismatch occurs, the incoming data is discarded, and an ACK handshake is returned to the host.

If EPSTATUS.BK0RDY is set, the incoming data is discarded, the bit Transmit Fail 0 interrupt bit in EPINTFLAG (EPINTFLAG.TRFAIL0) and the status bit STATUS_BK.ERRORFLOW are set. If the endpoint is not isochronous, a NAK handshake is returned to the host.

The incoming data is written to the data buffer pointed to by the Data Buffer Address (ADDR). If the number of received data bytes exceeds the maximum data payload specified as PCKSIZE.SIZE, the remainders of the received data bytes are discarded. The packet will still be checked for bit-stuff and CRC errors. If a bit-stuff or CRC error is detected in the packet, the USB module returns to idle and waits for the next token packet.

If the endpoint is isochronous and a bit-stuff or CRC error in the incoming data, the number of received data bytes, excluding CRC, is written to PCKSIZE.BYTE_COUNT. Finally the EPINTFLAG.TRFAIL0 and CRC Error bit in the Device Bank Status register (STATUS_BK.CRCERR) is set for the addressed endpoint.

If data was successfully received, an ACK handshake is returned to the host if the endpoint is not isochronous, and the number of received data bytes, excluding CRC, is written to PCKSIZE.BYTE_COUNT. If the number of received data bytes is the maximum data payload specified by PCKSIZE.SIZE no CRC data bytes are written to the data buffer. If the number of received data bytes is the maximum data payload specified by PCKSIZE.SIZE minus one, only the first CRC data byte is written to the data buffer If the number of received data is equal or less than the data payload specified by PCKSIZE.SIZE minus two, both CRC data bytes are written to the data buffer.

Finally in EPSTATUS for the addressed output endpoint, EPSTATUS.BK0RDY is set and EPSTATUS.DTGLOUT is toggled if the endpoint is not isochronous. The flag Transmit Complete 0 interrupt bit in EPINTFLAG (EPINTFLAG.TRCPT0) is set for the addressed endpoint.

32.6.2.8 Multi-Packet Transfers for OUT Endpoint

The number of data bytes received is stored in endpoint PCKSIZE.BYTE_COUNT as for normal operation. Since PCKSIZE.BYTE_COUNT is updated after each transaction, it must be set to zero when setting up a new transfer. The total number of bytes to be received must be written to PCKSIZE.MULTI_PACKET_SIZE. This value must be a multiple of PCKSIZE.SIZE, otherwise excess data may be written to SRAM locations used by other parts of the application.

EPSTATUS.DTGLOUT management for non-isochronous packets and EPINTFLAG.BK1RDY/BK0RDY management are as for normal operation.

If a maximum payload size packet is received, PCKSIZE.BYTE_COUNT will be incremented by PCKSIZE.SIZE after the transaction has completed, and EPSTATUS.DTGLOUT will be toggled if the endpoint is not isochronous. If the updated PCKSIZE.BYTE_COUNT is equal to PCKSIZE.MULTI_PACKET_SIZE (i.e. the last transaction), EPSTATUS.BK1RDY/BK0RDY, and EPINTFLAG.TRCPT0/TRCPT1 will be set.

Downloaded from Arrow.com.

32.6.2.9 Management of IN Transactions

Figure 32-5. IN Transfer: Data Packet USB Device to Host After Request from Host

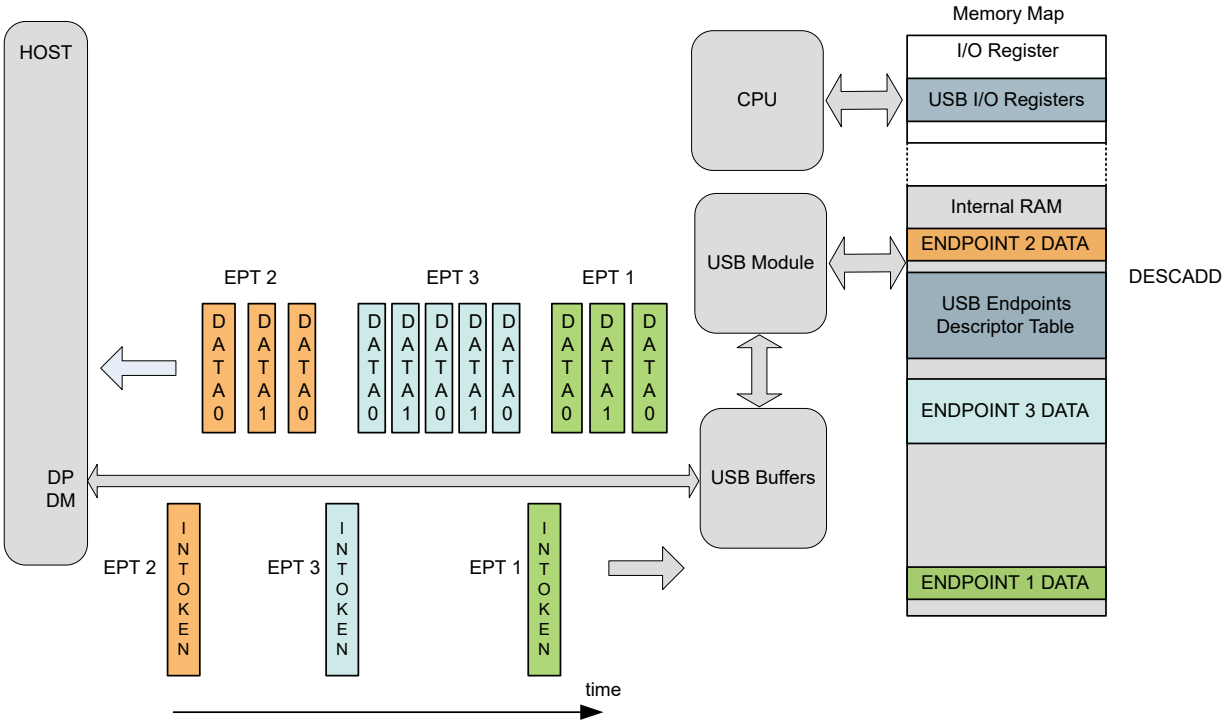

When an IN token is detected, and if the device address of the token packet does not match DADD.DADD, the packet is discarded and the USB module returns to idle and waits for the next token packet.

When the address matches, the USB module checks if the endpoint received is enabled in the EPCFG of the addressed endpoint and if not, the packet is discarded and the USB module returns to idle and waits for the next token packet.

When the endpoint is enabled, the USB module then checks on the EPCFG of the addressed input endpoint. If the EPCFG.EPTYPE1 is not set to IN, the USB module returns to idle and waits for the next token packet.

If EPSTATUS.STALLRQ1 in EPSTATUS is set, and the endpoint is not isochronous, a STALL handshake is returned to the host and EPINTFLAG.STALL1 is set.

If EPSTATUS.BK1RDY is cleared, the flag EPINTFLAG.TRFAIL1 is set. If the endpoint is not isochronous, a NAK handshake is returned to the host.

The USB module then fetches the Data Buffer Address (ADDR) from the addressed endpoint's descriptor. The data pointed to by the Data Buffer Address (ADDR) is sent to the host in a DATA0 packet if the endpoint is isochronous. For non-isochronous endpoints a DATA0 or DATA1 packet is sent depending on the state of EPSTATUS.DTGLIN. When the number of data bytes specified in endpoint PCKSIZE.BYTE_COUNT is sent, the CRC is appended and sent to the host.

For isochronous endpoints, EPSTATUS.BK1RDY is cleared and EPINTFLAG.TRCPT1 is set.

For all non-isochronous endpoints the USB module waits for an ACK handshake from the host. If an ACK handshake is not received within 16 bit times, the USB module returns to idle and waits for the next token packet. If an ACK handshake is successfully received EPSTATUS.BK1RDY is cleared, EPINTFLAG.TRCPT1 is set and EPSTATUS.DTGLIN is toggled.

Downloaded from Arrow.com.

32.6.2.10 Multi-Packet Transfers for IN Endpoint

The total number of data bytes to be sent is written to PCKSIZE.BYTE_COUNT as for normal operation. The Multi-packet size register (PCKSIZE.MULTI_PACKET_SIZE) is used to store the number of bytes that are sent, and must be written to zero when setting up a new transfer.

When an IN token is received, PCKSIZE.BYTE_COUNT and PCKSIZE.MULTI_PACKET_SIZE are fetched. If PCKSIZE.BYTE_COUNT minus PCKSIZE.MULTI_PACKET_SIZE is less than the endpoint PCKSIZE.SIZE, endpoint BYTE_COUNT minus endpoint PCKSIZE.MULTI_PACKET_SIZE bytes are transmitted, otherwise PCKSIZE.SIZE number of bytes are transmitted. If endpoint PCKSIZE.BYTE_COUNT is a multiple of PCKSIZE.SIZE, the last packet sent will be zero-length if the AUTOZLP bit is set.

If a maximum payload size packet was sent (i.e. not the last transaction), MULTI_PACKET_SIZE will be incremented by the PCKSIZE.SIZE. If the endpoint is not isochronous the EPSTATUS.DTLGIN bit will be toggled when the transaction has completed. If a short packet was sent (i.e. the last transaction), MULTI_PACKET_SIZE is incremented by the data payload. EPSTATUS.BK0/1RDY will be cleared and EPINTFLAG.TRCPT0/1 will be set.

32.6.2.11 Ping-Pong Operation

When an endpoint is configured for ping-pong operation, it uses both the input and output data buffers (banks) for a given endpoint in a single direction. The direction is selected by enabling one of the IN or OUT direction in EPCFG.EPTYPE0/1 and configuring the opposite direction in EPCFG.EPTYPE1/0 as Dual Bank.

When ping-pong operation is enabled for an endpoint, the endpoint in the opposite direction must be configured as dual bank. The data buffer, data address pointer and byte counter from the enabled endpoint are used as Bank 0, while the matching registers from the disabled endpoint are used as Bank 1.

Figure 32-6. Ping-Pong Overview

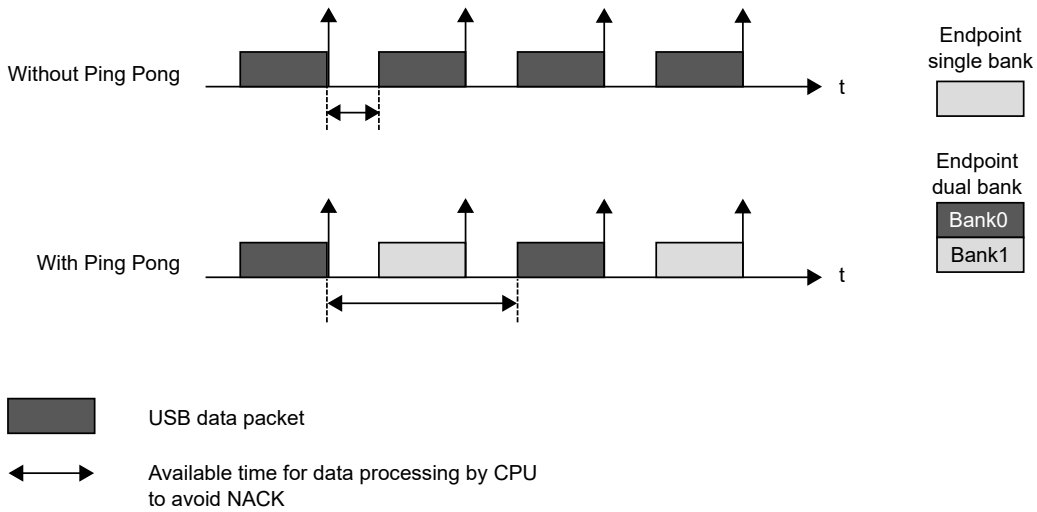

The Bank Select flag in EPSTATUS.CURBK indicates which bank data will be used in the next transaction, and is updated after each transaction. According to EPSTATUS.CURBK, EPINTFLAG.TRCPT0 or EPINTFLAG.TRFAIL0 or EPINTFLAG.TRCPT1 or EPINTFLAG.TRFAIL1 in EPINTFLAG and Data Buffer 0/1 ready (EPSTATUS.BK0RDY and EPSTATUS.BK1RDY) are set. The EPSTATUS.DTGLOUT and EPSTATUS.DTGLIN are updated for the enabled endpoint direction only.

32.6.2.12 Feedback Operation

Feedback endpoints are endpoints with same the address but in different directions. This is usually used in explicit feedback mechanism in USB Audio, where a feedback endpoint is associated to one or more isochronous data endpoints to which it provides feedback service. The feedback endpoint always has the opposite direction from the data endpoint.

The feedback endpoint always has the opposite direction from the data endpoint(s). The feedback endpoint has the same endpoint number as the first (lower) data endpoint. A feedback endpoint can be created by configuring an endpoint with different endpoint size (PCKSIZE.SIZE) and different endpoint type (EPCFG.EPTYPE0/1) for the IN and OUT direction.

Downloaded from Arrow.com.

Example Configuration for Feedback Operation:

- Endpoint n / IN: EPCFG.EPTYPE1 = Interrupt IN, PCKSIZE.SIZE = 64.
- Endpoint n / OUT: EPCFG.EPTYPE0= Isochronous OUT, PCKSIZE.SIZE = 512.

32.6.2.13 Suspend State and Pad Behavior

The following figure, Pad Behavior, illustrates the behavior of the USB pad in Device mode.

Figure 32-7. Pad Behavior

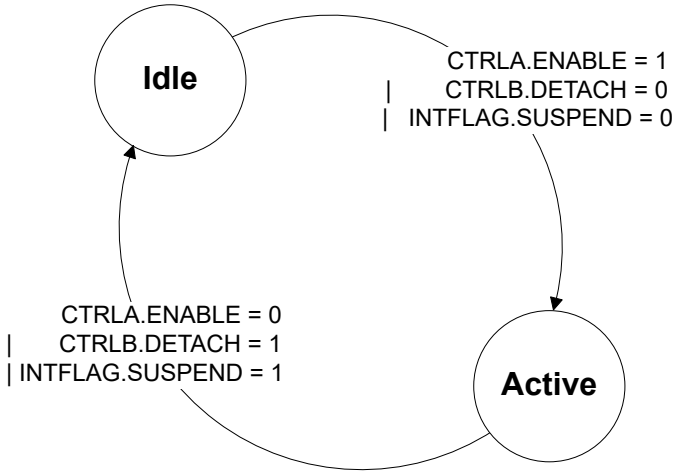

In Idle state, the pad is in Low Power Consumption mode.

In Active state, the pad is active.

The following figure, Pad Events, illustrates the pad events leading to a PAD state change.

Downloaded from Arrow.com.

Figure 32-8. Pad Events

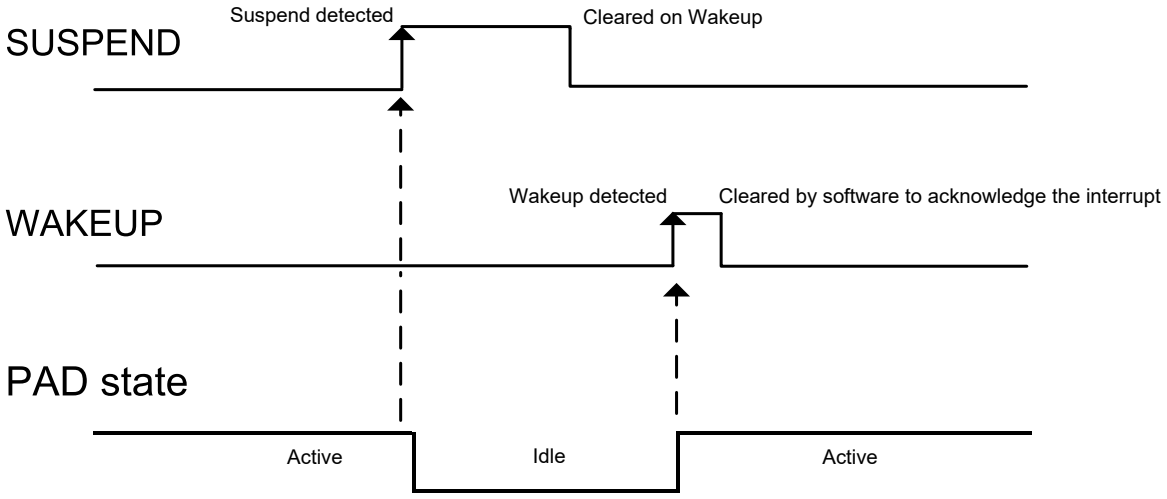

The Suspend Interrupt bit in the Device Interrupt Flag register (INTFLAG.SUSPEND) is set when a USB Suspend state has been detected on the USB bus. The USB pad is then automatically put in the Idle state. The detection of a non-idle state sets the Wake Up Interrupt bit (INTFLAG.WAKEUP) and wakes the USB pad.

The pad goes to the Idle state if the USB module is disabled or if CTRLB.DETACH is written to one. It returns to the Active state when CTRLA.ENABLE is written to one and CTRLB.DETACH is written to zero.

32.6.2.14 Remote Wakeup

The remote wakeup request (also known as upstream resume) is the only request the device may send on its own initiative. This should be preceded by a DEVICE_REMOTE_WAKEUP request from the host.

First, the USB must have detected a “Suspend” state on the bus, i.e. the remote wakeup request can only be sent after INTFLAG.SUSPEND has been set.

The user may then write a one to the Remote Wakeup bit (CTRLB.UPRSM) to send an Upstream Resume to the host initiating the wakeup. This will automatically be done by the controller after 5 ms of inactivity on the USB bus.

When the controller sends the Upstream Resume INTFLAG.WAKEUP is set and INTFLAG.SUSPEND is cleared.

The CTRLB.UPRSM is cleared at the end of the transmitting Upstream Resume.

In case of a rebroadcast resume initiated by the host, the End of Resume bit (INTFLAG.EORSM) flag is set when the rebroadcast resume is completed.

In the case where the CTRLB.UPRSM bit is set while a host initiated downstream resume is already started, the CTRLB.UPRSM is cleared and the upstream resume request is ignored.

32.6.2.15 Link Power Management L1 (LPM-L1) Suspend State Entry and Exit as Device

The LPM Handshake bit in CTRLB.LPMHDSK should be configured to accept the LPM transaction.

When a LPM transaction is received on any enabled endpoint n and a handshake has been sent in response by the controller according to CTRLB.LPMHDSK, the Device Link Power Manager (EXTREG) register is updated

Downloaded from Arrow.com.

in the bank 0 of the addressed endpoint's descriptor. It contains information such as the Best Effort Service Latency (BESL), the Remote Wake bit (bRemoteWake), and the Link State parameter (bLinkState). Usually, the LPM transaction uses only the endpoint number 0.

If the LPM transaction was positively acknowledged (ACK handshake), USB sets the Link Power Management Interrupt bit (INTFLAG.LPMSUSP) bit which indicates that the USB transceiver is suspended, reducing power consumption. This suspend occurs 9 microseconds after the LPM transaction according to the specification.

To further reduce consumption, it is recommended to stop the USB clock while the device is suspended.

The MCU can also enter in one of the available sleep modes if the wakeup time latency of the selected sleep mode complies with the host latency constraint, refer to the BESL parameter in EXTREG register.

Recovering from this LPM-L1 suspend state is exactly the same as the Suspend state (see Section 32.6.2.13 Suspend State and Pad Behavior) except that the remote wakeup duration initiated by USB is shorter to comply with the Link Power Management specification.

If the LPM transaction is responded with a NYET, the Link Power Management Not Yet Interrupt Flag (INTFLAG.LPMNYET) is set. This generates an interrupt if the Link Power Management Not Yet Interrupt Enable bit (INTENCLR/SET.LPMNYET) is set.

If the LPM transaction is responded with a STALL or no handshake, no flag is set, and the transaction is ignored.

Downloaded from Arrow.com.

32.6.2.16 USB Device Interrupt

Figure 32-9. Device Interrupt

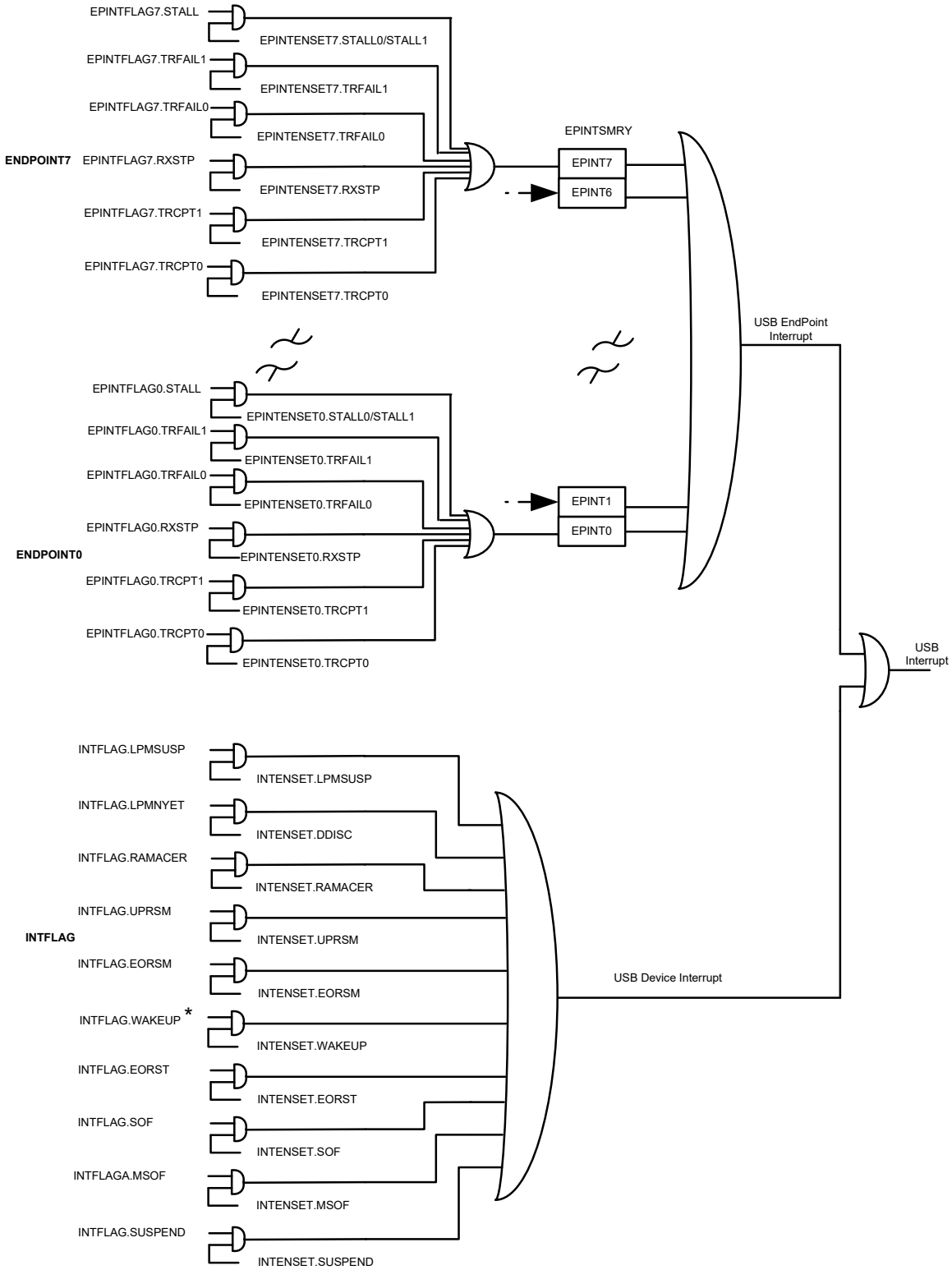

* Asynchronous interrupt

The WAKEUP is an asynchronous interrupt and can be used to wake-up the device from any sleep mode.

Downloaded from Arrow.com.

32.6.3 Host Operations

This section gives an overview of the USB module Host operation during normal transactions. For more details on general USB and USB protocol, refer to Universal Serial Bus Specification revision 2.1.

32.6.3.1 Device Detection and Disconnection

Prior to device detection the software must set the VBUS is OK bit (CTRLB.VBUSOK) register when the VBUS is available. This notifies the USB host that USB operations can be started. When the bit CTRLB.VBUSOK is zero and even if the USB HOST is configured and enabled, host operation is halted. Setting the bit CTRLB.VBUSOK will allow host operation when the USB is configured.

The Device detection is managed by the software using the Line State field in the Host Status (STATUS.LINESTATE) register. The device connection is detected by the host controller when DP or DM is pulled high, depending of the speed of the device.

The device disconnection is detected by the host controller when both DP and DM are pulled down using the STATUS.LINESTATE registers.

The Device Connection Interrupt bit (INTFLAG.DCONN) is set if a device connection is detected.

The Device Disconnection Interrupt bit (INTFLAG.DDISC) is set if a device disconnection is detected.

32.6.3.2 Host Terminology

In host mode, the term pipe is used instead of endpoint. A host pipe corresponds to a device endpoint, refer to "Universal Serial Bus Specification revision 2.1." for more information.

32.6.3.3 USB Reset

The USB sends a USB reset signal when the user writes a one to the USB Reset bit (CTRLB.BUSRESET). When the USB reset has been sent, the USB Reset Sent Interrupt bit in the INTFLAG (INTFLAG.RST) is set and all pipes will be disabled.

If the bus was previously in a suspended state (i.e., the Start of Frame Generation Enable bit (CTRLB.SOFE) is zero), the USB will switch it to the Resume state, causing the bus to asynchronously set the Host Wakeup Interrupt flag (INTFLAG.WAKEUP). The CTRLB.SOFE bit will be set in order to generate SOFs immediately after the USB reset.

During USB reset the following registers are cleared:

- All Host Pipe Configuration register (PCFG)
- Host Frame Number register (FNUM)
- Interval for the Bulk-Out/Ping transaction register (BINTERVAL)
- Host Start-of-Frame Control register (HSOFC)
- Pipe Interrupt Enable Clear/Set register (PINTENCLR/SET)
- Pipe Interrupt Flag register (PINTFLAG)
- Pipe Freeze bit in Pipe Status register (PSTATUS.FREEZE)

After the reset the user should check the Speed Status field in the Status register (STATUS.SPEED) to find out the current speed according to the capability of the peripheral.

32.6.3.4 Pipe Configuration

Pipe data can be placed anywhere in the RAM. The USB controller accesses these pipes directly through the AHB host (built-in DMA) with the help of the pipe descriptors. The base address of the pipe descriptors needs to be written in the Descriptor Address register (DESCADD) by the user. Refer to Pipe Description Structure.

Before using a pipe, the user should configure the direction and type of the pipe in Type of Pipe field in the Host Pipe Configuration register (PCFG.PTYPE). The pipe descriptor registers should be initialized to known values before using the pipe, so that the USB controller does not read the random values from the RAM.

The Pipe Size field in the Packet Size register (PCKSIZE.SIZE) should be configured as per the size reported by the device for the endpoint associated with this pipe. The Address of Data Buffer register (ADDR) should be set to the data buffer used for pipe transfers.

The Pipe Bank bit (PCFG.BK) should be set to one if dual banking is desired. Dual bank is not supported for Control pipes.

Downloaded from Arrow.com.

The Ram Access Interrupt bit in Host Interrupt Flag register (INTFLAG.RAMACER) is set when a RAM access underflow error occurs during an OUT stage.

When a pipe is disabled, the following registers are cleared for that pipe:

- Interval for the Bulk-Out/Ping transaction register (BINTERVAL)
- Pipe Interrupt Enable Clear/Set register (PINTENCLR/SET)
- Pipe Interrupt Flag register (PINTFLAG)
- Pipe Freeze bit in Pipe Status register (PSTATUS.FREEZE)

32.6.3.5 Pipe Activation

A disabled pipe is inactive, and will be reset along with its context registers (pipe registers for the pipe n). Pipes are enabled by writing the Type of the Pipe bit (PCFG.PTYPE) to a value different than 0x0 (disabled).

When a pipe is enabled, the Pipe Freeze bit in the Pipe Status register (PSTATUS.FREEZE) is set. This allows the user to complete the configuration of the pipe, without starting a USB transfer.

When starting an enumeration, the user retrieves the device descriptor by sending a GET_DESCRIPTOR USB request. This descriptor contains the maximal packet size of the device default control endpoint (bMaxPacketSize0), which the user should use to reconfigure the size of the default control pipe.

32.6.3.6 Pipe Address Setup

Once the device has answered the first host requests with the default device address 0, the host assigns a new address to the device. The host controller has to send a USB reset to the device and a SET_ADDRESS(addr) SETUP request with the new address to be used by the device. Once this SETUP transaction is complete, the user writes the new address to the Pipe Device Address field in the Host Control Pipe register (CTRL_PIPE.PDADDR) in Pipe descriptor. All following requests by this pipe will be performed using this new address.

32.6.3.7 Suspend and Wakeup

Setting CTRLB.SOFE to zero when in host mode will cause the USB to cease sending Start-of-Frames on the USB bus and enter the Suspend state. The USB device will enter the Suspend state 3ms later.

Before entering suspend by writing CTRLB.SOFE to zero, the user must freeze the active pipes by setting their PSTATUS.FREEZE bit. Any current on-going pipe will complete its transaction, and then all pipes will be inactive. The user should wait at least 1 complete frame before entering the suspend mode to avoid any data loss.

The device can awaken the host by sending an Upstream Resume (Remote Wakeup feature). When the host detects a non-idle state on the USB bus, it sets the INTFLAG.WAKEUP. If the non-idle bus state corresponds to an Upstream Resume (K state), the Upstream Resume Received Interrupt bit in INTFLAG (INTFLAG.UPRSM) is set and the user must generate a Downstream Resume within 1 ms and for at least 20 ms. It is required to first write a one to the Send USB Resume bit in CTRLB (CTRLB.RESUME) to respond to the upstream resume with a downstream resume. Alternatively, the host can resume from a suspend state by sending a Downstream Resume on the USB bus (CTRLB.RESUME set to 1). In both cases, when the downstream resume is completed, the CTRLB.SOFE bit is automatically set and the host enters again the active state.

32.6.3.8 Phase-locked SOFs

To support the Synchronous Endpoints capability, the period of the emitted Start-of-Frame is maintained while the USB connection is not in the active state. This does not apply for the disconnected/connected/reset states. It applies for active/idle/suspend/resume states. The period of Start-of-Frame will be 1ms when the USB connection is in active state and an integer number of milli-seconds across idle/suspend/resume states.

To ensure the Synchronous Endpoints capability, the GCLK_USB clock must be kept running. If the GCLK_USB is interrupted, the period of the emitted Start-of-Frame will be erratic.

32.6.3.9 Management of Control Pipes

A control transaction is composed of three stages:

- SETUP
- Data (IN or OUT)
- Status (IN or OUT)

The user has to change the pipe token according to each stage using the Pipe Token field in PCFG (PCFG.PTOKEN).

Downloaded from Arrow.com.

For control pipes only, the token is assigned a specific initial data toggle sequence:

- SETUP: Data0
- IN: Data1
- OUT: Data1

32.6.3.10 Management of IN Pipes

IN packets are sent by the USB device controller upon IN request reception from the host. All the received data from the device to the host will be stored in the bank provided the bank is empty. The pipe and its descriptor in RAM must be configured.

The host indicates it is able to receive data from the device by clearing the Bank 0/1 Ready bit in PSTATUS (PSTATUS.BK0/1RDY), which means that the memory for the bank is available for new USB transfer.

The USB will perform IN requests as long as the pipe is not frozen by the user.

The generation of IN requests starts when the pipe is unfrozen (PSTATUS.PFREEZE is set to zero).

When the current bank is full, the Transmit Complete 0/1 bit in PINTFLAG (PINTFLAG.TRCPT0/1) will be set and trigger an interrupt if enabled and the PSTATUS.BK0/1RDY bit will be set.

PINTFLAG.TRCPT0/1 must be cleared by software to acknowledge the interrupt. This is done by writing a one to the PINTFLAG.TRCPT0/1 of the addressed pipe.

The user reads the PCKSIZE.BYTE_COUNT to know how many bytes should be read.

To free the bank the user must read the IN data from the address ADDR in the pipe descriptor and clear the PKSTATUS.BK0/1RDY bit. When the IN pipe is composed of multiple banks, a successful IN transaction will switch to the next bank. Another IN request will be performed by the host as long as the PSTATUS.BK0/1RDY bit for that bank is set. The PINTFLAG.TRCPT0/1 and PSTATUS.BK0/1RDY will be updated accordingly.

The user can follow the current bank looking at Current Bank bit in PSTATUS (PSTATUS.CURBK) and by looking at Data Toggle for IN pipe bit in PSTATUS (PSTATUS.DTGLIN).

When the pipe is configured as single bank (Pipe Bank bit in PCFG (PCFG.BK) is 0), only PINTFLAG.TRCPT0 and PSTATUS.BK0 are used. When the pipe is configured as dual bank (PCFG.BK is 1), both PINTFLAG.TRCPT0/1 and PSTATUS.BK0/1 are used.

32.6.3.11 Management of OUT Pipes

OUT packets are sent by the host. All the data stored in the bank will be sent to the device provided the bank is filled. The pipe and its descriptor in RAM must be configured.

The host can send data to the device by writing to the data bank 0 in single bank or the data bank 0/1 in dual bank.

The generation of OUT packet starts when the pipe is unfrozen (PSTATUS.PFREEZE is zero).

The user writes the OUT data to the data buffer pointer by ADDR in the pipe descriptor and allows the USB to send the data by writing a one to the PSTATUS.BK0/1RDY. This will also cause a switch to the next bank if the OUT pipe is part of a dual bank configuration.

PINTFLAGn.TRCPT0/1 must be cleared before setting PSTATUS.BK0/1RDY to avoid missing an PINTFLAGn.TRCPT0/1 event.

32.6.3.12 Alternate Pipe

The user has the possibility to run sequentially several logical pipes on the same physical pipe. It allows addressing of any device endpoint of any attached device on the bus.

Before switching pipe, the user should save the pipe context (Pipe registers and descriptor for pipe n).

After switching pipe, the user should restore the pipe context (Pipe registers and descriptor for pipe n) and in particular PCFG, and PSTATUS.

32.6.3.13 Data Flow Error

This error exists only for isochronous and interrupt pipes for both IN and OUT directions. It sets the Transmit Fail bit in PINTFLAG (PINTFLAG.TRFAIL), which triggers an interrupt if the Transmit Fail bit in PINTENCLR/SET(PINTENCLR/SET.TRFAIL) is set. The user must check the Pipe Interrupt Summary register (PINTSMRY) to find out the pipe which triggered the interrupt. Then the user must check the origin of the interrupt's bank by

Downloaded from Arrow.com.

looking at the Pipe Bank Status register (STATUS_BK) for each bank. If the Error Flow bit in the STATUS_BK (STATUS_BK.ERRORFLOW) is set then the user is able to determine the origin of the data flow error. As the user knows that the endpoint is an IN or OUT the error flow can be deduced as OUT underflow or as an IN overflow.

An underflow can occur during an OUT stage if the host attempts to send data from an empty bank. If a new transaction is successful, the relevant bank descriptor STATUS_BK.ERRORFLOW will be cleared.

An overflow can occur during an IN stage if the device tries to send a packet while the bank is full. Typically this occurs when a CPU is not fast enough. The packet data is not written to the bank and is lost. If a new transaction is successful, the relevant bank descriptor STATUS_BK.ERRORFLOW will be cleared.

32.6.3.14 CRC Error

This error exists only for isochronous IN pipes. It sets the PINTFLAG.TRFAIL, which triggers an interrupt if PINTENCLR/SET.TRFAIL is set. The user must check the PINTSMRY to find out the pipe which triggered the interrupt. Then the user must check the origin of the interrupt's bank by looking at the bank descriptor STATUS_BK for each bank and if the CRC Error bit in STATUS_BK (STATUS_BK.CRCERR) is set then the user is able to determine the origin of the CRC error. A CRC error can occur during the IN stage if the USB detects a corrupted packet. The IN packet will remain stored in the bank and PINTFLAG.TRCPT0/1 will be set.

32.6.3.15 PERR Error

This error exists for all pipes. It sets the PINTFLAG.PERR Interrupt, which triggers an interrupt if PINTFLAG.PERR is set. The user must check the PINTSMRY register to find out the pipe which can cause an interrupt.

A PERR error occurs if one of the error field in the STATUS_PIPE register in the Host pipe descriptor is set and the Error Count field in STATUS_PIPE (STATUS_PIPE.ERCNT) exceeds the maximum allowed number of Pipe error(s) as defined in Pipe Error Max Number field in CTRL_PIPE (CTRL_PIPE.PERMAX). Refer to Host Control Pipe and Host Status Pipe registers.

If one of the error field in the STATUS_PIPE register from the Host Pipe Descriptor is set and the STATUS_PIPE.ERCNT is less than the CTRL_PIPE.PERMAX, the STATUS_PIPE.ERCNT is incremented.

32.6.3.16 Link Power Management L1 (LPM-L1) Suspend State Entry and Exit as Host.

An EXTENDED LPM transaction can be transmitted by any enabled pipe. The PCFGn.PTYPE should be set to EXTENDED. Other fields as PCFG.PTOKEN, PCFG.BK and PCKSIZE.SIZE are irrelevant in this configuration. The user should also set the EXTREG.VARIABLE in the descriptor as described in the EXTREG Register.

When the pipe is configured and enabled, an EXTENDED TOKEN followed by a LPM TOKEN are transmitted. The device responds with a valid HANDSHAKE, corrupted HANDSHAKE or no HANDSHAKE (TIME-OUT).

If the valid HANDSHAKE is an ACK, the host will immediately proceed to L1 SLEEP and the PINTFLAG.TRCT0 is set. The minimum duration of the L1 SLEEP state will be the TL1RetryAndResidency as defined in the reference document "ENGINEERING CHANGE NOTICE, USB 2.0 Link Power Management Addendum". When entering the L1 SLEEP state, the CTRLB.SOFE is cleared, avoiding Start-of-Frame generation.

If the valid HANDSHAKE is a NYET PINTFLAG.TRFAIL is set.

If the valid HANDSHAKE is a STALL the PINTFLAG.STALL is set.

If there is no HANDSHAKE or corrupted HANDSHAKE, the EXTENDED/LPM pair of TOKENS will be transmitted again until reaching the maximum number of retries as defined by the CTRL_PIPE.PERMAX in the pipe descriptor.

If the last retry returns no valid HANDSHAKE, the PINTFLAGn.PERR is set, and the STATUS_BK is updated in the pipe descriptor.

All LPM transactions, should they end up with a ACK, a NYET, a STALL or a PERR, will set the PSTATUS.PFREEZE bit, freezing the pipe before a succeeding operation. The user should unfreeze the pipe to start a new LPM transaction.

To exit the L1 STATE, the user initiate a DOWNSTREAM RESUME by setting the bit CTRLB.RESUME or a L1 RESUME by setting the Send L1 Resume bit in CTRLB (CTRLB.L1RESUME). In the case of a L1 RESUME, the K STATE duration is given by the BESL bit field in the EXTREG.VARIABLE field. Refer to the EXTREG Register.

When the host is in the L1 SLEEP state after a successful LPM transmitted, the device can initiate an UPSTREAM RESUME. This will set the Upstream Resume Interrupt bit in INTFLAG (INTFLAG.UPRSM). The host should proceed then to a L1 RESUME as described above.

After resuming from the L1 SLEEP state, the bit CTRLB.SOFE is set, allowing Start-of-Frame generation.

Downloaded from Arrow.com.

32.6.3.17 Host Interrupt

Figure 32-10. Host Interrupt

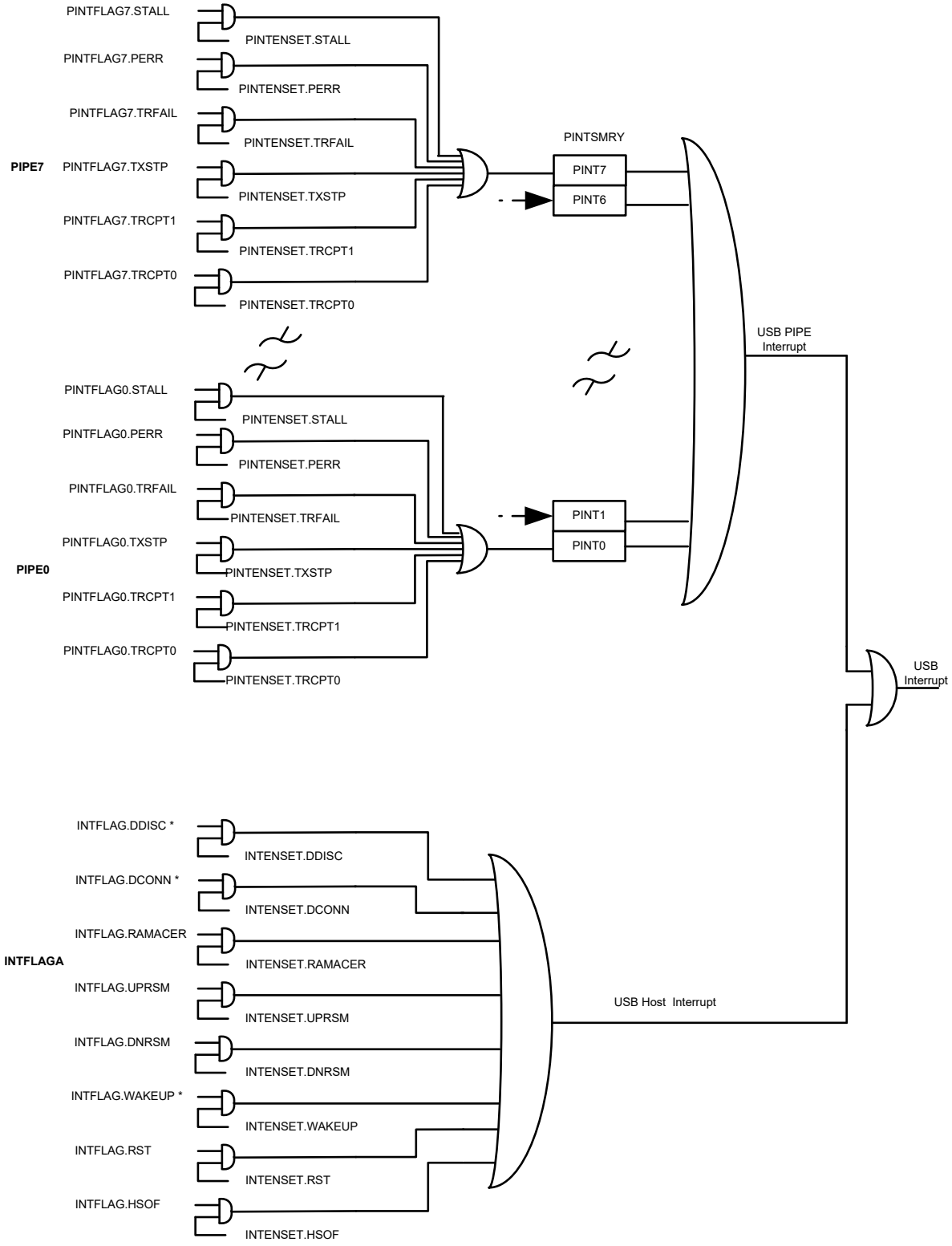

* Asynchronous interrupt

The WAKEUP is an asynchronous interrupt and can be used to wake-up the device from any sleep mode.

Downloaded from Arrow.com.

32.7 Communication Device Host Register Summary

Offset	Name	Bit Pos.	7	6	5	4	3	2	1	0
0x00	CTRLA	7:0	MODE					RUNSTDBY	ENABLE	SWRST
0x01	Reserved									
0x02	SYNCBUSY	7:0							ENABLE	SWRST
0x03	QOSCTRL	7:0					DQOS[1:0]		CQOS[1:0]	
0x04 ... 0x0C	Reserved									
0x0D	FSMSTATUS	7:0		FSMSTATE[6:0]						
0x0E ... 0x23	Reserved									
0x24	DESCADD	7:0	DESCADD[7:0]							
		15:8	DESCADD[15:8]							
		23:16	DESCADD[23:16]							
		31:24	DESCADD[31:24]							
0x28	PADCAL	7:0	TRANSN[1:0]			TRANSP[4:0]				
		15:8		TRIM[2:0]				TRANSN[4:2]		

32.8 Communication Device Host Register Description

Registers can be 8, 16, or 32 bits wide. Atomic 8-, 16-, and 32-bit accesses are supported. In addition, the 8-bit quarters and 16-bit halves of a 32-bit register, and the 8-bit halves of a 16-bit register can be accessed directly.

Some registers require synchronization when read and/or written. Synchronization is denoted by the "Read-Synchronized" and/or "Write-Synchronized" property in each individual register description.

Optional write-protection by the PAC - Peripheral Access Controller is denoted by the "PAC Write-Protection" property in each individual register description.

Some registers are enable-protected, meaning they can only be written when the module is disabled. Enable-protection is denoted by the "Enable-Protected" property in each individual register description.

Downloaded from Arrow.com.

32.8.1 Control A

Name: CTRLA
Offset: 0x00
Reset: 0x00
Property: PAC Write-Protection, Write-Synchronised

Bit	7	6	5	4	3	2	1	0
	MODE					RUNSTDBY	ENABLE	SWRST
Access	R/W					R/W	R/W	R/W
Reset	0					0	0	0

Bit 7 – MODE Operating Mode
This bit defines the operating mode of the USB.

Value	Description
0	USB Device mode
1	USB Host mode

Bit 2 – RUNSTDBY Run in Standby Mode
This bit is Enable-Protected.

Value	Description
0	USB clock is stopped in standby mode.
1	USB clock is running in standby mode

Bit 1 – ENABLE Enable
Due to synchronization there is delay from writing CTRLA.ENABLE until the peripheral is enabled/disabled. The value written to CTRLA.ENABLE will read back immediately and the Synchronization status enable bit in the Synchronization Busy register (SYNCBUSY.ENABLE) will be set. SYNCBUSY.ENABLE will be cleared when the operation is complete.
This bit is Write-Synchronized.

Value	Description
0	The peripheral is disabled or being disabled.
1	The peripheral is enabled or being enabled.

Bit 0 – SWRST Software Reset
Writing a zero to this bit has no effect.
Writing a '1' to this bit resets all registers in the USB, to their initial state, and the USB will be disabled.
Writing a '1' to CTRLA.SWRST will always take precedence, meaning that all other writes in the same write-operation will be discarded.
Due to synchronization there is a delay from writing CTRLA.SWRST until the reset is complete. CTRLA.SWRST and SYNCBUSY.SWRST will both be cleared when the reset is complete.
This bit is Write-Synchronized.

Value	Description
0	There is no reset operation ongoing.
1	The reset operation is ongoing.

Downloaded from Arrow.com.

32.8.2 Synchronization Busy

Name: SYNCBUSY
Offset: 0x02
Reset: 0x00
Property: -

Bit	7	6	5	4	3	2	1	0
							ENABLE	SWRST
Access							R	R
Reset							0	0

Bit 1 – ENABLE Synchronization Enable status bit
This bit is cleared when the synchronization of ENABLE register between the clock domains is complete.
This bit is set when the synchronization of ENABLE register between clock domains is started.

Bit 0 – SWRST Synchronization Software Reset status bit
This bit is cleared when the synchronization of SWRST register between the clock domains is complete.
This bit is set when the synchronization of SWRST register between clock domains is started.

Downloaded from Arrow.com.

32.8.3 QOS Control

Name: QOSCTRL
Offset: 0x03
Reset: 0x000x0F
Property: PAC Write-Protection

Bit	7	6	5	4	3	2	1	0
					DQOS[1:0]		CQOS[1:0]	
Access					R/W	R/W	R/W	R/W
Reset					0	0	0	0

Bits 3:2 – DQOS[1:0] Data Quality of Service
These bits define the memory priority access during the endpoint or pipe read/write data operation. Refer to *SRAM Quality of Service*.

Bits 1:0 – CQOS[1:0] Configuration Quality of Service
These bits define the memory priority access during the endpoint or pipe read/write configuration operation. Refer to *SRAM Quality of Service*.

Downloaded from Arrow.com.

32.8.4 Finite State Machine Status

Name: FSMSTATUS
Offset: 0x0D
Reset: 0xXXXX
Property: Read only

Bit	7	6	5	4	3	2	1	0
		FSMSTATE[6:0]						
Access		R	R	R	R	R	R	R
Reset		0	0	0	0	0	0	1

Bits 6:0 – FSMSTATE[6:0] Fine State Machine Status
These bits indicate the state of the finite state machine of the USB controller.

Value	Name	Description
0x01	OFF (L3)	Corresponds to the powered-off, disconnected, and disabled state.
0x02	ON (L0)	Corresponds to the Idle and Active states.
0x04	SUSPEND (L2)	
0x08	SLEEP (L1)	
0x10	DNRESUME	Down Stream Resume.
0x20	UPRESUME	Up Stream Resume.
0x40	RESET	USB lines Reset.
Others		Reserved

Downloaded from Arrow.com.

32.8.5 Descriptor Address

Name: DESCADD
Offset: 0x24
Reset: 0x00000000
Property: PAC Write-Protection

Bit	31	30	29	28	27	26	25	24
	DESCADD[31:24]							
Access	R/W	R/W	R/W	R/W	R/W	R/W	R/W	R/W
Reset	0	0	0	0	0	0	0	0

Bit	23	22	21	20	19	18	17	16
	DESCADD[23:16]							
Access	R/W	R/W	R/W	R/W	R/W	R/W	R/W	R/W
Reset	0	0	0	0	0	0	0	0

Bit	15	14	13	12	11	10	9	8
	DESCADD[15:8]							
Access	R/W	R/W	R/W	R/W	R/W	R/W	R/W	R/W
Reset	0	0	0	0	0	0	0	0

Bit	7	6	5	4	3	2	1	0
	DESCADD[7:0]							
Access	R/W	R/W	R/W	R/W	R/W	R/W	R/W	R/W
Reset	0	0	0	0	0	0	0	0

Bits 31:0 – DESCADD[31:0] Descriptor Address Value
These bits define the base address of the main USB descriptor in RAM. The two least significant bits must be written to zero.

Downloaded from Arrow.com.

32.8.6 Pad Calibration

Name: PADCAL
Offset: 0x28
Reset: 0x0000
Property: PAC Write-Protection

The Pad Calibration values must be loaded from the NVM Software Calibration Area into the USB Pad Calibration register by software, before enabling the USB, to achieve the specified accuracy.
Refer to NVM Software Calibration Area Mapping for further details.

Refer to for further details.

Bit	15	14	13	12	11	10	9	8
		TRIM[2:0]				TRANSN[4:2]		
Access		R/W	R/W	R/W		R/W	R/W	R/W
Reset		0	0	0		0	0	0

Bit	7	6	5	4	3	2	1	0
	TRANSN[1:0]			TRANSP[4:0]				
Access	R/W	R/W		R/W	R/W	R/W	R/W	R/W
Reset	0	0		0	0	0	0	0

Bits 14:12 – TRIM[2:0] Trim bits for DP/DM
These bits calibrate the matching of rise/fall of DP/DM.

Bits 10:6 – TRANSN[4:0] Trimmable Output Driver Impedance N
These bits calibrate the NMOS output impedance of DP/DM drivers.

Bits 4:0 – TRANSP[4:0] Trimmable Output Driver Impedance P
These bits calibrate the PMOS output impedance of DP/DM drivers.

Downloaded from Arrow.com.

32.9 Device Registers - Common -Register Summary

Offset	Name	Bit Pos.	7	6	5	4	3	2	1	0
0x00 ... 0x07	Reserved									
0x08	CTRLB	7:0	TSTPCKT	TSTK	TSTJ	NREPLY	SPDCONF[1:0]		UPRSM	DETACH
		15:8					LPMHDSK[1:0]		GNAK	OPMODE2
0x0A	DADD	7:0	ADDEN	DADD[6:0]						
0x0B	Reserved									
0x0C	STATUS	7:0	LINESTATE[1:0]				SPEED[1:0]			
0x0D ... 0x0F	Reserved									
0x10	FNUM	7:0	FNUM[4:0]					MFNUM[2:0]		
		15:8	FNCERR		FNUM[10:5]					
0x12 ... 0x13	Reserved									
0x14	INTENCLR	7:0	RAMACER	UPRSM	EORSM	WAKEUP	EORST	SOF	MSOF	SUSPEND
		15:8							LPMSUSP	LPMNYET
0x16 ... 0x17	Reserved									
0x18	INTENSET	7:0	RAMACER	UPRSM	EORSM	WAKEUP	EORST	SOF	MSOF	SUSPEND
		15:8							LPMSUSP	LPMNYET
0x1A ... 0x1B	Reserved									
0x1C	INTFLAG	7:0	RAMACER	UPRSM	EORSM	WAKEUP	EORST	SOF	MSOF	SUSPEND
		15:8							LPMSUSP	LPMNYET
0x1E ... 0x1F	Reserved									
0x20	EPINTSMRY	7:0	EPINT7	EPINT6	EPINT5	EPINT4	EPINT3	EPINT2	EPINT1	EPINT0
		15:8								

32.10 Device Registers - Common

Registers can be 8, 16, or 32 bits wide. Atomic 8-, 16-, and 32-bit accesses are supported. In addition, the 8-bit quarters and 16-bit halves of a 32-bit register, and the 8-bit halves of a 16-bit register can be accessed directly.

Some registers require synchronization when read and/or written. Synchronization is denoted by the "Read-Synchronized" and/or "Write-Synchronized" property in each individual register description.

Optional write-protection by the PAC - Peripheral Access Controller is denoted by the "PAC Write-Protection" property in each individual register description.

Some registers are enable-protected, meaning they can only be written when the module is disabled. Enable-protection is denoted by the "Enable-Protected" property in each individual register description

Downloaded from Arrow.com.

32.10.1 Control B

Name: CTRLB
Offset: 0x08
Reset: 0x0000
Property: PAC Write-Protection

Bit	15	14	13	12	11	10	9	8
					LPMHDSK[1:0]		GNAK	OPMODE2
Access					R/W	R/W	R/W	R/W
Reset					0	0	0	0

Bit	7	6	5	4	3	2	1	0
	TSTPCKT	TSTK	TSTJ	NREPLY	SPDCONF[1:0]		UPRSM	DETACH
Access	R/W	R/W	R/W	R	R/W	R/W	R/W	R/W
Reset	0	0	0	0	0	0	0	0

Bits 11:10 – LPMHDSK[1:0] Link Power Management Handshake
These bits select the Link Power Management Handshake configuration.

Value	Description
0x0	No handshake. LPM is not supported.
0x1	ACK
0x2	NYET
0x3	Reserved

Bit 9 – GNAK Global NAK
This bit configures the operating mode of the NAK.
This bit is not synchronized.

Value	Description
0	The handshake packet reports the status of the USB transaction
1	A NAK handshake is answered for each USB transaction regardless of the current endpoint memory bank status

Bit 8 – OPMODE2 Specific Operational Mode

Value	Description
0	The UTMI transceiver is in normal operation Mode.
1	The UTMI transceiver is in the “disabled bit stuffing and NRZI encoding” operational mode for test purpose.

Bit 7 – TSTPCKT Test Packet Mode

Value	Description
0	The UTMI transceiver is in normal operation Mode.
1	The UTMI transceiver generates test packets for test purpose.

Bit 6 – TSTK Test Mode K

Value	Description
0	The UTMI transceiver is in normal operation Mode.
1	The UTMI transceiver generates high speed K state for test purpose.

Bit 5 – TSTJ Test Mode J

Value	Description
0	The UTMI transceiver is in normal operation Mode.
1	The UTMI transceiver generates high speed J state for test purpose.

Bit 4 – NREPLY No reply excepted SETUP Token
This bit is cleared by hardware when receiving a SETUP packet.

Downloaded from Arrow.com.

This bit has no effect for any other endpoint but endpoint 0.

Value	Description
0	Disable the “NO_REPLY” feature: Any transaction to endpoint 0 will be handled according to the USB2.0 standard.
1	Enable the “NO_REPLY” feature: Any transaction to endpoint 0 will be ignored except SETUP.

Bits 3:2 – SPDCONF[1:0] Speed Configuration
These bits select the speed configuration.

Value	Description
0x0	FS: Full-speed
0x1	LS: Low-speed
0x2	HS: High-speed capable
0x3	HSTM: High-speed Test Mode (force High-speed mode for test mode)

Bit 1 – UPRSM Upstream Resume
This bit is cleared when the USB receives a USB reset or once the upstream resume has been sent.

Value	Description
0	Writing a zero to this bit has no effect.
1	Writing a one to this bit will generate an upstream resume to the host for a remote wakeup.

Bit 0 – DETACH Detach

Value	Description
0	The device is attached to the USB bus so that communications may occur.
1	It is the default value at reset. The internal device pull-ups are disabled, removing the device from the USB bus.

Downloaded from Arrow.com.

32.10.2 Device Address

Name: DADD
Offset: 0x0A
Reset: 0x00
Property: PAC Write-Protection

Bit	7	6	5	4	3	2	1	0
	ADDEN	DADD[6:0]						
Access	R/W	R/W	R/W	R/W	R/W	R/W	R/W	R/W
Reset	0	0	0	0	0	0	0	0

Bit 7 – ADDEN Device Address Enable
This bit is cleared when a USB reset is received.

Value	Description
0	Writing a zero will deactivate the DADD field (USB device address) and return the device to default address 0.
1	Writing a one will activate the DADD field (USB device address).

Bits 6:0 – DADD[6:0] Device Address
These bits define the device address. The DADD register is reset when a USB reset is received.

Downloaded from Arrow.com.

32.10.3 Status

Name: STATUS
Offset: 0x0C
Reset: 0x40
Property: -

Bit	7	6	5	4	3	2	1	0
	LINESTATE[1:0]				SPEED[1:0]			
Access	R	R			R/W	R/W		
Reset	0	1			0	1		

Bits 7:6 – LINESTATE[1:0] USB Line State Status
These bits define the current line state DP/DM.

LINESTATE[1:0]	USB Line Status
0x0	SE0/RESET
0x1	FS-J or LS-K State
0x2	FS-K or LS-J State

Bits 3:2 – SPEED[1:0] Speed Status
These bits define the current speed used of the device.

SPEED[1:0]	SPEED STATUS
0x0	Full-speed mode
0x1	Low-speed mode
0x2	High-speed mode
0x3	Reserved

Downloaded from Arrow.com.

32.10.4 Device Frame Number

Name: FNUM
Offset: 0x10
Reset: 0x0000
Property: Read only

Bit	15	14	13	12	11	10	9	8
	FNCERR		FNUM[10:5]					
Access	R/W		R/W	R/W	R/W	R/W	R/W	R/W
Reset	0		0	0	0	0	0	0

Bit	7	6	5	4	3	2	1	0
	FNUM[4:0]					MFNUM[2:0]		
Access	R/W	R/W	R/W	R/W	R/W	R/W	R/W	R/W
Reset	0	0	0	0	0	0	0	0

Bit 15 – FNCERR Frame Number CRC Error
This bit is cleared upon receiving a USB reset.
This bit is set when a corrupted frame number (or micro-frame number) is received.
This bit and the SOF (or MSOF) interrupt bit are updated at the same time.

Bits 13:3 – FNUM[10:0] Frame Number
These bits are cleared upon receiving a USB reset.
These bits are updated with the frame number information as provided from the last SOF packet even if a corrupted SOF is received.

Bits 2:0 – MFNUM[2:0] Micro Frame Number
These bits are cleared upon receiving a USB reset or at the beginning of each Start-of-Frame (SOF interrupt).
These bits are updated with the micro-frame number information as provided from the last MSOF packet even if a corrupted MSOF is received.

Downloaded from Arrow.com.

32.10.5 Device Interrupt Enable Clear

Name: INTENCLR
Offset: 0x14
Reset: 0x0000
Property: PAC Write-Protection

This register allows the user to disable an interrupt without doing a read-modify-write operation. Changes in this register will also be reflected in the Interrupt Enable Set (INTENSET) register.

Bit	15	14	13	12	11	10	9	8
							LPMSUSP	LPMNYET
Access							R/W	R/W
Reset							0	0

Bit	7	6	5	4	3	2	1	0
	RAMACER	UPRSM	EORSM	WAKEUP	EORST	SOF	MSOF	SUSPEND
Access	R/W	R/W	R/W	R/W	R/W	R/W	R/W	R/W
Reset	0	0	0	0	0	0	0	0

Bit 9 – LPMSUSP Link Power Management Suspend Interrupt Enable
Writing a zero to this bit has no effect.
Writing a one to this bit will clear the Link Power Management Suspend Interrupt Enable bit and disable the corresponding interrupt request.

Value	Description
0	The Link Power Management Suspend interrupt is disabled.
1	The Link Power Management Suspend interrupt is enabled and an interrupt request will be generated when the Link Power Management Suspend interrupt Flag is set.

Bit 8 – LPMNYET Link Power Management Not Yet Interrupt Enable
Writing a zero to this bit has no effect.
Writing a one to this bit will clear the Link Power Management Not Yet interrupt Enable bit and disable the corresponding interrupt request.

Value	Description
0	The Link Power Management Not Yet interrupt is disabled.
1	The Link Power Management Not Yet interrupt is enabled and an interrupt request will be generated when the Link Power Management Not Yet interrupt Flag is set.

Bit 7 – RAMACER RAM Access Interrupt Enable
Writing a zero to this bit has no effect.
Writing a one to this bit will clear the RAM Access interrupt Enable bit and disable the corresponding interrupt request.

Value	Description
0	The RAM Access interrupt is disabled.
1	The RAM Access interrupt is enabled and an interrupt request will be generated when the RAM Access interrupt Flag is set.

Bit 6 – UPRSM Upstream Resume Interrupt Enable
Writing a zero to this bit has no effect.
Writing a one to this bit will clear the Upstream Resume interrupt Enable bit and disable the corresponding interrupt request.

Value	Description
0	The Upstream Resume interrupt is disabled.
1	The Upstream Resume interrupt is enabled and an interrupt request will be generated when the Upstream Resume interrupt Flag is set.

Downloaded from Arrow.com.

Bit 5 – EORSM End Of Resume Interrupt Enable
Writing a zero to this bit has no effect.
Writing a one to this bit will clear the End Of Resume interrupt Enable bit and disable the corresponding interrupt request.

Value	Description
0	The End Of Resume interrupt is disabled.
1	The End Of Resume interrupt is enabled and an interrupt request will be generated when the End Of Resume interrupt Flag is set.

Bit 4 – WAKEUP Wake-Up Interrupt Enable
Writing a zero to this bit has no effect.
Writing a one to this bit will clear the Wake Up interrupt Enable bit and disable the corresponding interrupt request.

Value	Description
0	The Wake Up interrupt is disabled.
1	The Wake Up interrupt is enabled and an interrupt request will be generated when the Wake Up interrupt Flag is set.

Bit 3 – EORST End of Reset Interrupt Enable
Writing a zero to this bit has no effect.
Writing a one to this bit will clear the End of Reset interrupt Enable bit and disable the corresponding interrupt request.

Value	Description
0	The End of Reset interrupt is disabled.
1	The End of Reset interrupt is enabled and an interrupt request will be generated when the End of Reset interrupt Flag is set.

Bit 2 – SOF Start-of-Frame Interrupt Enable
Writing a zero to this bit has no effect.
Writing a one to this bit will clear the Start-of-Frame interrupt Enable bit and disable the corresponding interrupt request.

Value	Description
0	The Start-of-Frame interrupt is disabled.
1	The Start-of-Frame interrupt is enabled and an interrupt request will be generated when the Start-of-Frame interrupt Flag is set.

Bit 1 – MSOF Micro Start-of-Frame Interrupt Enable in High Speed Mode
Writing a zero to this bit has no effect.
Writing a one to this bit will clear the Micro Start-of-Frame interrupt Enable bit and disable the corresponding interrupt request.

Value	Description
0	The Micro Start-of-Frame interrupt is disabled.
1	The Micro Start-of-Frame interrupt is enabled and an interrupt request will be generated when the Micro Start-of-Frame Access interrupt Flag is set.

Bit 0 – SUSPEND Suspend Interrupt Enable
Writing a zero to this bit has no effect.
Writing a one to this bit will clear the Suspend Interrupt Enable bit and disable the corresponding interrupt request.

Value	Description
0	The Suspend interrupt is disabled.
1	The Suspend interrupt is enabled and an interrupt request will be generated when the Suspend interrupt Flag is set.

Downloaded from Arrow.com.

32.10.6 Device Interrupt Enable Set

Name: INTENSET
Offset: 0x18
Reset: 0x0000
Property: PAC Write-Protection

This register allows the user to enable an interrupt without doing a read-modify-write operation. Changes in this register will also be reflected in the Interrupt Enable Clear (INTENCLR) register.

Bit	15	14	13	12	11	10	9	8
							LPMSUSP	LPMNYET
Access							R/W	R/W
Reset							0	0

Bit	7	6	5	4	3	2	1	0
	RAMACER	UPRSM	EORSM	WAKEUP	EORST	SOF	MSOF	SUSPEND
Access	R/W	R/W	R/W	R/W	R/W	R/W	R/W	R/W
Reset	0	0	0	0	0	0	0	0

Bit 9 – LPMSUSP Link Power Management Suspend Interrupt Enable
Writing a zero to this bit has no effect.
Writing a one to this bit will set the Link Power Management Suspend Enable bit and enable the corresponding interrupt request.

Value	Description
0	The Link Power Management Suspend interrupt is disabled.
1	The Link Power Management Suspend interrupt is enabled.

Bit 8 – LPMNYET Link Power Management Not Yet Interrupt Enable
Writing a zero to this bit has no effect.
Writing a one to this bit will set the Link Power Management Not Yet interrupt bit and enable the corresponding interrupt request.

Value	Description
0	The Link Power Management Not Yet interrupt is disabled.
1	The Link Power Management Not Yet interrupt is enabled.

Bit 7 – RAMACER RAM Access Interrupt Enable
Writing a zero to this bit has no effect.
Writing a one to this bit will set the RAM Access Enable bit and enable the corresponding interrupt request.

Value	Description
0	The RAM Access interrupt is disabled.
1	The RAM Access interrupt is enabled.

Bit 6 – UPRSM Upstream Resume Interrupt Enable
Writing a zero to this bit has no effect.
Writing a one to this bit will set the Upstream Resume Enable bit and enable the corresponding interrupt request.

Value	Description
0	The Upstream Resume interrupt is disabled.
1	The Upstream Resume interrupt is enabled.

Bit 5 – EORSM End Of Resume Interrupt Enable
Writing a zero to this bit has no effect.
Writing a one to this bit will set the End Of Resume interrupt Enable bit and enable the corresponding interrupt request.

Value	Description
0	The End Of Resume interrupt is disabled.
1	The End Of Resume interrupt is enabled.

Downloaded from Arrow.com.

Bit 4 – WAKEUP Wake-Up Interrupt Enable
Writing a zero to this bit has no effect.
Writing a one to this bit will set the Wake Up interrupt Enable bit and enable the corresponding interrupt request.

Value	Description
0	The Wake Up interrupt is disabled.
1	The Wake Up interrupt is enabled.

Bit 3 – EORST End of Reset Interrupt Enable
Writing a zero to this bit has no effect.
Writing a one to this bit will set the End of Reset interrupt Enable bit and enable the corresponding interrupt request.

Value	Description
0	The End of Reset interrupt is disabled.
1	The End of Reset interrupt is enabled.

Bit 2 – SOF Start-of-Frame Interrupt Enable
Writing a zero to this bit has no effect.
Writing a one to this bit will set the Start-of-Frame interrupt Enable bit and enable the corresponding interrupt request.

Value	Description
0	The Start-of-Frame interrupt is disabled.
1	The Start-of-Frame interrupt is enabled.

Bit 1 – MSOF Micro Start-of-Frame Interrupt Enable in High Speed Mode
Writing a zero to this bit has no effect.
Writing a one to this bit will set the Micro Start-of-Frame interrupt Enable bit and enable the corresponding interrupt request.

Value	Description
0	The Micro Start-of-Frame interrupt is disabled.
1	The Micro Start-of-Frame interrupt is enabled

Bit 0 – SUSPEND Suspend Interrupt Enable
Writing a zero to this bit has no effect.
Writing a one to this bit will set the Suspend interrupt Enable bit and enable the corresponding interrupt request.

Value	Description
0	The Suspend interrupt is disabled.
1	The Suspend interrupt is enabled.

Downloaded from Arrow.com.

32.10.7 Device Interrupt Flag Status and Clear

Name: INTFLAG
Offset: 0x01C
Reset: 0x0000
Property: -

Bit	15	14	13	12	11	10	9	8
							LPMSUSP	LPMNYET
Access							R/W	R/W
Reset							0	0

Bit	7	6	5	4	3	2	1	0
	RAMACER	UPRSM	EORSM	WAKEUP	EORST	SOF	MSOF	SUSPEND
Access	R/W	R/W	R/W	R/W	R/W	R/W	R/W	R/W
Reset	0	0	0	0	0	0	0	0

Bit 9 – LPMSUSP Link Power Management Suspend Interrupt Flag
This flag is cleared by writing a one to the flag.
This flag is set when the USB module acknowledge a Link Power Management Transaction (ACK handshake) and has entered the Suspended state and will generate an interrupt if INTENCLR/SET.LPMSUSP is one.
Writing a zero to this bit has no effect.
Writing a one to this bit clears the LPMSUSP Interrupt Flag.

Bit 8 – LPMNYET Link Power Management Not Yet Interrupt Flag
This flag is cleared by writing a one to the flag.
This flag is set when the USB module acknowledges a Link Power Management Transaction (handshake is NYET) and will generate an interrupt if INTENCLR/SET.LPMNYET is one.
Writing a zero to this bit has no effect.
Writing a one to this bit clears the LPMNYET Interrupt Flag.

Bit 7 – RAMACER RAM Access Interrupt Flag
This flag is cleared by writing a one to the flag.
This flag is set when a RAM access underflow error occurs during IN data stage. This bit will generate an interrupt if INTENCLR/SET.RAMACER is one.
Writing a zero to this bit has no effect.

Bit 6 – UPRSM Upstream Resume Interrupt Flag
This flag is cleared by writing a one to the flag.
This flag is set when the USB sends a resume signal called “Upstream Resume” and will generate an interrupt if INTENCLR/SET.UPRSM is one.
Writing a zero to this bit has no effect.

Bit 5 – EORSM End Of Resume Interrupt Flag
This flag is cleared by writing a one to the flag.
This flag is set when the USB detects a valid “End of Resume” signal initiated by the host and will generate an interrupt if INTENCLR/SET.EORSM is one.
Writing a zero to this bit has no effect.

Bit 4 – WAKEUP Wake Up Interrupt Flag
This flag is cleared by writing a one to the flag.
This flag is set when the USB is reactivated by a filtered non-idle signal from the lines and will generate an interrupt if INTENCLR/SET.WAKEUP is one.
Writing a zero to this bit has no effect.

Downloaded from Arrow.com.

Bit 3 – EORST End of Reset Interrupt Flag
This flag is cleared by writing a one to the flag.
This flag is set when a USB “End of Reset” has been detected and will generate an interrupt if INTENCLR/SET.EORST is one.
Writing a zero to this bit has no effect.

Bit 2 – SOF Start-of-Frame Interrupt Flag
This flag is cleared by writing a one to the flag.
This flag is set when a USB “Start-of-Frame” has been detected (every 1 ms) and will generate an interrupt if INTENCLR/SET.SOF is one.
The FNUM is updated.
Writing a zero to this bit has no effect.

Bit 1 – MSOF Micro Start-of-Frame Interrupt Flag in High Speed Mode
This flag is cleared by writing a one to the flag.
This flag is set when a USB “Micro Start-of-Frame” has been detected (every 125 us) and will generate an interrupt if INTENCLR/SET.MSOF is one.
The MFNUM register is updated.The FNUM register is unchanged.
Writing a zero to this bit has no effect.

Bit 0 – SUSPEND Suspend Interrupt Flag
This flag is cleared by writing a one to the flag.
This flag is set when a USB “Suspend” idle state has been detected for 3 frame periods (J state for 3 ms) and will generate an interrupt if INTENCLR/SET.SUSPEND is one.
Writing a zero to this bit has no effect.

Downloaded from Arrow.com.

32.10.8 Endpoint Interrupt Summary

Name: EPINTSMRY
Offset: 0x20
Reset: 0x0000
Property: -

Bit	15	14	13	12	11	10	9	8
Access								
Reset								

Bit	7	6	5	4	3	2	1	0
	EPINT7	EPINT6	EPINT5	EPINT4	EPINT3	EPINT2	EPINT1	EPINT0
Access	R	R	R	R	R	R	R	R
Reset	0	0	0	0	0	0	0	0

Bits 0, 1, 2, 3, 4, 5, 6, 7 – EPINT EndPoint Interrupt
The flag EPINT[n] is set when an interrupt is triggered by the EndPoint n. Refer to the EPINTFLAGn register in the Device EndPoint section.
This bit will be cleared when no interrupts are pending for EndPoint n.

Downloaded from Arrow.com.

32.11 Device Endpoint Register Summary

Offset	Name	Bit Pos.	7	6	5	4	3	2	1	0
0x00 ... 0xFF	Reserved									
0x0100	EPCFGn	7:0	NYETDIS		EPTYPE1[2:0]			EPTYPE0[2:0]		
0x0101 ... 0x0103	Reserved									
0x0104	EPSTATUSCLRn	7:0	BK1RDY	BK0RDY	STALLRQ1	STALLRQ0		CURBK	DTGLIN	DTGLOUT
0x0105	EPSTATUSSETn	7:0	BK1RDY	BK0RDY	STALLRQ1	STALLRQ0		CURBK	DTGLIN	DTGLOUT
0x0106	EPSTATUSn	7:0	BK1RDY	BK0RDY	STALLRQ1	STALLRQ0		CURBK	DTGLIN	DTGLOUT
0x0107	EPINTFLAGn	7:0		STALL1	STALL0	RXSTP	TRFAIL1	TRFAIL0	TRCPT1	TRCPT0
0x0108	EPINTENCLRn	7:0		STALL1	STALL0	RXSTP	TRFAIL1	TRFAIL0	TRCPT1	TRCPT0
0x0109	EPINTENSETn	7:0		STALL1	STALL0	RXSTP	TRFAIL1	TRFAIL0	TRCPT1	TRCPT0

32.12 Device Endpoint Register Description

Registers can be 8, 16, or 32 bits wide. Atomic 8-, 16-, and 32-bit accesses are supported. In addition, the 8-bit quarters and 16-bit halves of a 32-bit register, and the 8-bit halves of a 16-bit register can be accessed directly.

Some registers require synchronization when read and/or written. Synchronization is denoted by the "Read-Synchronized" and/or "Write-Synchronized" property in each individual register description.

Optional write-protection by the PAC - Peripheral Access Controller is denoted by the "PAC Write-Protection" property in each individual register description.

Some registers are enable-protected, meaning they can only be written when the module is disabled. Enable-protection is denoted by the "Enable-Protected" property in each individual register description

Downloaded from Arrow.com.

32.12.1 Device Endpoint Configuration register n

Name: EPCFGn
Offset: 0x100
Reset: 0x00
Property: PAC Write-Protection

Bit	7	6	5	4	3	2	1	0
	NYETDIS	EPTYPE1[2:0]				EPTYPE0[2:0]		
Access	R/W	R/W	R/W	R/W		R/W	R/W	R/W
Reset	0	0	0	0		0	0	0

Bit 7 – NYETDIS NYET token disable

Value	Description
0	Disable the “NYETDIS” feature: In high-speed, handshake will be handled according to the USB2.0 standard.
1	Enable the “NYETDIS” feature: An ack handshake will be sent instead of an NYET handshake in high-speed mode.

Bits 6:4 – EPTYPE1[2:0] Endpoint Type for IN direction
These bits contains the endpoint type for IN direction.
Upon receiving a USB reset EPCFGn.EPTYPE1 is cleared except for endpoint 0 which is unchanged.

Value	Description
0x0	Bank1 is disabled.
0x1	Bank1 is enabled and configured as Control IN.
0x2	Bank1 is enabled and configured as Isochronous IN.
0x3	Bank1 is enabled and configured as Bulk IN.
0x4	Bank1 is enabled and configured as Interrupt IN.
0x5	Bank1 is enabled and configured as Dual-Bank OUT (Endpoint type is the same as the one defined in EPTYPE0)
0x6-0x7	Reserved

Bits 2:0 – EPTYPE0[2:0] Endpoint Type for OUT direction
These bits contains the endpoint type for OUT direction.
Upon receiving a USB reset EPCFGn.EPTYPE0 is cleared except for endpoint 0 which is unchanged.

Value	Description
0x0	Bank0 is disabled.
0x1	Bank0 is enabled and configured as Control SETUP / Control OUT.
0x2	Bank0 is enabled and configured as Isochronous OUT.
0x3	Bank0 is enabled and configured as Bulk OUT.
0x4	Bank0 is enabled and configured as Interrupt OUT.
0x5	Bank0 is enabled and configured as Dual Bank IN (Endpoint type is the same as the one defined in EPTYPE1)
0x6-0x7	Reserved

Downloaded from Arrow.com.

32.12.2 EndPoint Status Clear n

Name: EPSTATUSCLRn
Offset: 0x104
Reset: 0x00
Property: PAC Write-Protection

Bit	7	6	5	4	3	2	1	0
	BK1RDY	BK0RDY	STALLRQ1	STALLRQ0		CURBK	DTGLIN	DTGLOUT
Access	W	W	W	W		W	W	W
Reset	0	0	0	0		0	0	0

Bit 7 – BK1RDY Bank 1 Ready Clear
Writing a zero to this bit has no effect.
Writing a one to this bit will clear EPSTATUS.BK1RDY bit.

Bit 6 – BK0RDY Bank 0 Ready Clear
Writing a zero to this bit has no effect.
Writing a one to this bit will clear EPSTATUS.BK0RDY bit.

Bit 5 – STALLRQ1 STALL bank 1 Request Clear
Writing a zero to this bit has no effect.
Writing a one to this bit will clear EPSTATUS.STALLRQ1 bit.

Bit 4 – STALLRQ0 STALL bank 0 Request Clear
Writing a zero to this bit has no effect.
Writing a one to this bit will clear EPSTATUS.STALLRQ0 bit.

Bit 2 – CURBK Current Bank Clear
Writing a zero to this bit has no effect.
Writing a one to this bit will clear EPSTATUS.CURBK bit.

Bit 1 – DTGLIN Data Toggle IN Clear
Writing a zero to this bit has no effect.
Writing a one to this bit will clear EPSTATUS.DTGLIN bit.

Bit 0 – DTGLOUT Data Toggle OUT Clear
Writing a zero to this bit has no effect.
Writing a one to this bit will clear the EPSTATUS.DTGLOUT bit.

Downloaded from Arrow.com.

32.12.3 EndPoint Status Set n

Name: EPSTATUSSETn
Offset: 0x105
Reset: 0x00
Property: PAC Write-Protection

Bit	7	6	5	4	3	2	1	0
	BK1RDY	BK0RDY	STALLRQ1	STALLRQ0		CURBK	DTGLIN	DTGLOUT
Access	W	W	W	W		W	W	W
Reset	0	0	0	0		0	0	0

Bit 7 – BK1RDY Bank 1 Ready Set
Writing a zero to this bit has no effect.
Writing a one to this bit will set EPSTATUS.BK1RDY bit.

Bit 6 – BK0RDY Bank 0 Ready Set
Writing a zero to this bit has no effect.
Writing a one to this bit will set EPSTATUS.BK0RDY bit.

Bit 5 – STALLRQ1 STALL Request bank 1 Set
Writing a zero to this bit has no effect.
Writing a one to this bit will set EPSTATUS.STALLRQ1 bit.

Bit 4 – STALLRQ0 STALL Request bank 0 Set
Writing a zero to this bit has no effect.
Writing a one to this bit will set EPSTATUS.STALLRQ0 bit.

Bit 2 – CURBK Current Bank Set
Writing a zero to this bit has no effect.
Writing a one to this bit will set EPSTATUS.CURBK bit.

Bit 1 – DTGLIN Data Toggle IN Set
Writing a zero to this bit has no effect.
Writing a one to this bit will set EPSTATUS.DTGLIN bit.

Bit 0 – DTGLOUT Data Toggle OUT Set
Writing a zero to this bit has no effect.
Writing a one to this bit will set the EPSTATUS.DTGLOUT bit.

Downloaded from Arrow.com.

32.12.4 EndPoint Status n

Name: EPSTATUSn
Offset: 0x106
Reset: 0x00
Property: PAC Write-Protection

Bit	7	6	5	4	3	2	1	0
	BK1RDY	BK0RDY	STALLRQ1	STALLRQ0		CURBK	DTGLIN	DTGLOUT
Access	R	R	R	R		R	R	R
Reset	0	0	0	2		0	0	0

Bit 7 – BK1RDY Bank 1 is ready
For Control/OUT direction Endpoints, the bank is empty.
Writing a one to the bit EPSTATUSCLR.BK1RDY will clear this bit.
Writing a one to the bit EPSTATUSSET.BK1RDY will set this bit.

Value	Description
0	The bank number 1 is not ready : For IN direction Endpoints, the bank is not yet filled in.
1	The bank number 1 is ready: For IN direction Endpoints, the bank is filled in. For Control/OUT direction Endpoints, the bank is full.

Bit 6 – BK0RDY Bank 0 is ready
Writing a one to the bit EPSTATUSCLR.BK0RDY will clear this bit.
Writing a one to the bit EPSTATUSSET.BK0RDY will set this bit.

Value	Description
0	The bank number 0 is not ready : For IN direction Endpoints, the bank is not yet filled in. For Control/OUT direction Endpoints, the bank is empty.
1	The bank number 0 is ready: For IN direction Endpoints, the bank is filled in. For Control/OUT direction Endpoints, the bank is full.

Bits 4, 5 – STALLRQ STALL bank x request
Writing a zero to the bit EPSTATUSCLR.STALLRQ will clear this bit.
Writing a one to the bit EPSTATUSSET.STALLRQ will set this bit.
This bit is cleared by hardware when receiving a SETUP packet.

Value	Description
0	Disable STALLRQx feature.
1	Enable STALLRQx feature: a STALL handshake will be sent to the host in regards to bank x.

Bit 2 – CURBK Current Bank
Writing a zero to the bit EPSTATUSCLR.CURBK will clear this bit.
Writing a one to the bit EPSTATUSSET.CURBK will set this bit.

Value	Description
0	The bank0 is the bank that will be used in the next single/multi USB packet.
1	The bank1 is the bank that will be used in the next single/multi USB packet.

Bit 1 – DTGLIN Data Toggle IN Sequence
Writing a zero to the bit EPSTATUSCLR.DTGLINCLR will clear this bit.
Writing a one to the bit EPSTATUSSET.DTGLINSET will set this bit.

Value	Description
0	The PID of the next expected IN transaction will be zero: data 0.
1	The PID of the next expected IN transaction will be one: data 1.

Bit 0 – DTGLOUT Data Toggle OUT Sequence
Writing a zero to the bit EPSTATUSCLR.DTGLOUTCLR will clear this bit.
Writing a one to the bit EPSTATUSSET.DTGLOUTSET will set this bit.

Downloaded from Arrow.com.

Value	Description
0	The PID of the next expected OUT transaction will be zero: data 0.
1	The PID of the next expected OUR transaction will be one: data 1.

Downloaded from Arrow.com.

32.12.5 Device EndPoint Interrupt Flag n

Name: EPINTFLAGn
Offset: 0x107
Reset: 0x00
Property: -

Bit	7	6	5	4	3	2	1	0
		STALL1	STALL0	RXSTP	TRFAIL1	TRFAIL0	TRCPT1	TRCPT0
Access		R/W	R/W	R/W	R/W	R/W	R/W	R/W
Reset		0	2	0	0	2	0	2

Bits 5, 6 – STALL Transmit Stall x Interrupt Flag
This flag is cleared by writing a one to the flag.
This flag is set when a Transmit Stall occurs and will generate an interrupt if EPINTENCLR/SET.STALL is one.
EPINTFLAG.STALL is set for a single bank OUT endpoint or double bank IN/OUT endpoint when current bank is "0".
Writing a zero to this bit has no effect.
Writing a one to this bit clears the STALL Interrupt Flag.

Bit 4 – RXSTP Received Setup Interrupt Flag
This flag is cleared by writing a one to the flag.
This flag is set when a Received Setup occurs and will generate an interrupt if EPINTENCLR/SET.RXSTP is one.
Writing a zero to this bit has no effect.
Writing a one to this bit clears the RXSTP Interrupt Flag.

Bits 2, 3 – TRFAIL Transfer Fail x Interrupt Flag
This flag is cleared by writing a one to the flag.
This flag is set when a transfer fail occurs and will generate an interrupt if EPINTENCLR/SET.TRFAIL is one.
EPINTFLAG.TRFAIL is set for a single bank OUT endpoint or double bank IN/OUT endpoint when current bank is "0".
Writing a zero to this bit has no effect.
Writing a one to this bit clears the TRFAIL Interrupt Flag.

Bits 0, 1 – TRCPT Transfer Complete x interrupt Flag
This flag is cleared by writing a one to the flag.
This flag is set when a Transfer complete occurs and will generate an interrupt if EPINTENCLR/SET.TRCPT is one.
EPINTFLAG.TRCPT is set for a single bank OUT endpoint or double bank IN/OUT endpoint when current bank is "0".
Writing a zero to this bit has no effect.
Writing a one to this bit clears the TRCPT0 Interrupt Flag.

Downloaded from Arrow.com.

32.12.6 Device EndPoint Interrupt Enable n

Name: EPINTENCLRn
Offset: 0x108
Reset: 0x00
Property: PAC Write-Protection

This register allows the user to enable an interrupt without doing a read-modify-write operation. Changes in this register will also be reflected in the Endpoint Interrupt Enable Set (EPINTENSET) register.

Bit	7	6	5	4	3	2	1	0
		STALL1	STALL0	RXSTP	TRFAIL1	TRFAIL0	TRCPT1	TRCPT0
Access		R/W	R/W	R/W	R/W	R/W	R/W	R/W
Reset		0	2	0	0	2	0	2

Bits 5, 6 – STALL Transmit STALL x Interrupt Enable
Writing a zero to this bit has no effect.
Writing a one to this bit will clear the Transmit Stall x Interrupt Enable bit and disable the corresponding interrupt request.

Value	Description
0	The Transmit Stall x interrupt is disabled.
1	The Transmit Stall x interrupt is enabled and an interrupt request will be generated when the Transmit Stall x Interrupt Flag is set.

Bit 4 – RXSTP Received Setup Interrupt Enable
Writing a zero to this bit has no effect.
Writing a one to this bit will clear the Received Setup Interrupt Enable bit and disable the corresponding interrupt request.

Value	Description
0	The Received Setup interrupt is disabled.
1	The Received Setup interrupt is enabled and an interrupt request will be generated when the Received Setup Interrupt Flag is set.

Bits 2, 3 – TRFAIL Transfer Fail x Interrupt Enable
The user should look into the descriptor table status located in ram to be informed about the error condition : ERRORFLOW, CRC.
Writing a zero to this bit has no effect.
Writing a one to this bit will clear the Transfer Fail x Interrupt Enable bit and disable the corresponding interrupt request.

Value	Description
0	The Transfer Fail bank x interrupt is disabled.
1	The Transfer Fail bank x interrupt is enabled and an interrupt request will be generated when the Transfer Fail x Interrupt Flag is set.

Bits 0, 1 – TRCPT Transfer Complete x interrupt Enable
Writing a zero to this bit has no effect.
Writing a one to this bit will clear the Transfer Complete x interrupt Enable bit and disable the corresponding interrupt request.

Value	Description
0	The Transfer Complete bank x interrupt is disabled.
1	The Transfer Complete bank x interrupt is enabled and an interrupt request will be generated when the Transfer Complete x Interrupt Flag is set.

Downloaded from Arrow.com.

32.12.7 Device Interrupt EndPoint Set n

Name: EPINTENSETn
Offset: 0x109
Reset: 0x0000
Property: PAC Write-Protection

This register allows the user to enable an interrupt without doing a read-modify-write operation. Changes in this register will also be reflected in the Endpoint Interrupt Enable Set (EPINTENCLR) register. This register is cleared by USB reset or when EPEN[n] is zero.

Bit	7	6	5	4	3	2	1	0
		STALL1	STALL0	RXSTP	TRFAIL1	TRFAIL0	TRCPT1	TRCPT0
Access		R/W	R/W	R/W	R/W	R/W	R/W	R/W
Reset		0	2	0	0	2	0	2

Bits 5, 6 – STALL Transmit Stall x Interrupt Enable
Writing a zero to this bit has no effect.
Writing a one to this bit will enable the Transmit bank x Stall interrupt.

Value	Description
0	The Transmit Stall x interrupt is disabled.
1	The Transmit Stall x interrupt is enabled.

Bit 4 – RXSTP Received Setup Interrupt Enable
Writing a zero to this bit has no effect.
Writing a one to this bit will enable the Received Setup interrupt.

Value	Description
0	The Received Setup interrupt is disabled.
1	The Received Setup interrupt is enabled.

Bits 2, 3 – TRFAIL Transfer Fail bank x Interrupt Enable
Writing a zero to this bit has no effect.
Writing a one to this bit will enable the Transfer Fail interrupt.

Value	Description
0	The Transfer Fail interrupt is disabled.
1	The Transfer Fail interrupt is enabled.

Bits 0, 1 – TRCPT Transfer Complete bank x interrupt Enable
Writing a zero to this bit has no effect.
Writing a one to this bit will enable the Transfer Complete x interrupt.
0.2.4 Device Registers - Endpoint RAM

Value	Description
0	The Transfer Complete bank x interrupt is disabled.
1	The Transfer Complete bank x interrupt is enabled.

Downloaded from Arrow.com.

32.13 Endpoint Descriptor Structure

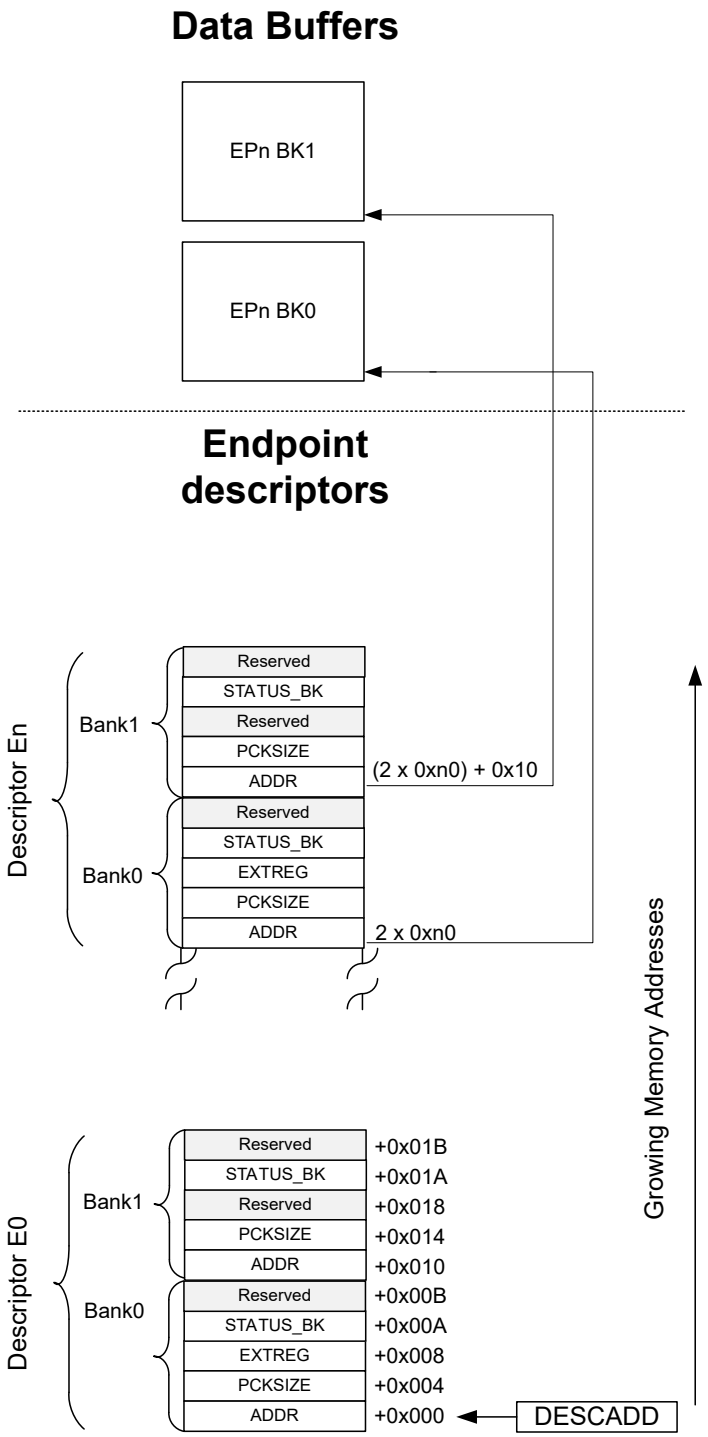

Downloaded from Arrow.com.

32.14 Device Endpoint RAM Register Summary

Offset	Name	Bit Pos.	7	6	5	4	3	2	1	0
0x00	ADDR	7:0	ADDR[7:0]							
		15:8	ADDR[15:8]							
		23:16	ADDR[23:16]							
		31:24	ADDR[31:24]							
0x04	PCKSIZE	7:0	BYTE_COUNT[7:0]							
		15:8	MULTI_PACKET_SIZE[1:0]		BYTE_COUNT[13:8]					
		23:16	MULTI_PACKET_SIZE[9:2]							
		31:24	AUTO_ZLP	SIZE[2:0]			MULTI_PACKET_SIZE[13:10]			
0x08	EXTREG	7:0	VARIABLE[3:0]				SUBPID[3:0]			
		15:8		VARIABLE[10:4]						
0x0A	STATUS_BK	7:0							ERRORFLOW	CRCERR

32.15 Device Endpoint RAM Register Description

Registers can be 8, 16, or 32 bits wide. Atomic 8-, 16-, and 32-bit accesses are supported. In addition, the 8-bit quarters and 16-bit halves of a 32-bit register, and the 8-bit halves of a 16-bit register can be accessed directly.

Some registers require synchronization when read and/or written. Synchronization is denoted by the "Read-Synchronized" and/or "Write-Synchronized" property in each individual register description.

Optional write-protection by the PAC - Peripheral Access Controller is denoted by the "PAC Write-Protection" property in each individual register description.

Some registers are enable-protected, meaning they can only be written when the module is disabled. Enable-protection is denoted by the "Enable-Protected" property in each individual register description.

Downloaded from Arrow.com.

32.15.1 Address of Data Buffer

Name: ADDR
Offset: 0x00
Reset: 0xXXXXXXXX
Property: NA

Old address offset 0x00 and 0x10

Bit	31	30	29	28	27	26	25	24
	ADDR[31:24]							
Access	R/W	R/W	R/W	R/W	R/W	R/W	R/W	R/W
Reset	x	x	x	x	x	x	x	x

Bit	23	22	21	20	19	18	17	16
	ADDR[23:16]							
Access	R/W	R/W	R/W	R/W	R/W	R/W	R/W	R/W
Reset	x	x	x	x	x	x	x	x

Bit	15	14	13	12	11	10	9	8
	ADDR[15:8]							
Access	R/W	R/W	R/W	R/W	R/W	R/W	R/W	R/W
Reset	x	x	x	x	x	x	x	x

Bit	7	6	5	4	3	2	1	0
	ADDR[7:0]							
Access	R/W	R/W	R/W	R/W	R/W	R/W	R/W	R/W
Reset	x	x	x	x	x	x	x	x

Bits 31:0 – ADDR[31:0] Data Pointer Address Value
These bits define the data pointer address as an absolute word address in RAM. The two least significant bits must be zero to ensure the start address is 32-bit aligned.

Downloaded from Arrow.com.

32.15.2 Packet Size

Name: PCKSIZE
Offset: 0x04
Reset: 0xXXXXXXXX
Property: NA

Original offset 0x04 & 0x14

Bit	31	30	29	28	27	26	25	24
	AUTO_ZLP	SIZE[2:0]			MULTI_PACKET_SIZE[13:10]			
Access	R/W	R/W	R/W	R/W	R/W	R/W	R/W	R/W
Reset	x	0	0	x	0	0	0	0

Bit	23	22	21	20	19	18	17	16
	MULTI_PACKET_SIZE[9:2]							
Access	R/W	R/W	R/W	R/W	R/W	R/W	R/W	R/W
Reset	0	0	0	0	0	0	0	0

Bit	15	14	13	12	11	10	9	8
	MULTI_PACKET_SIZE[1:0]		BYTE_COUNT[13:8]					
Access	R/W	R/W	R/W	R/W	R/W	R/W	R/W	R/W
Reset	0	x	0	0	0	0	0	0

Bit	7	6	5	4	3	2	1	0
	BYTE_COUNT[7:0]							
Access	R/W	R/W	R/W	R/W	R/W	R/W	R/W	R/W
Reset	0	0	0	0	0	0	0	x

Bit 31 – AUTO_ZLP Automatic Zero Length Packet
This bit defines the automatic Zero Length Packet mode of the endpoint.
When enabled, the USB module will manage the ZLP handshake by hardware. This bit is for IN endpoints only. When disabled the handshake should be managed by firmware.

Value	Description
0	Automatic Zero Length Packet is disabled.
1	Automatic Zero Length Packet is enabled.

Bits 30:28 – SIZE[2:0] Endpoint size
These bits contains the maximum packet size of the endpoint.

Value	Description
0x0	8 Byte
0x1	16 Byte
0x2	32 Byte
0x3	64 Byte
0x4	128 Byte(1)
0x5	256 Byte(1)
0x6	512 Byte(1)
0x7	1023 Byte(1)
Note: 1. For isochronous endpoint only.	

Bits 27:14 – MULTI_PACKET_SIZE[13:0] Multiple Packet Size
These bits define the 14-bit value that is used for multi-packet transfers.
For IN endpoints, MULTI_PACKET_SIZE holds the total number of bytes sent. MULTI_PACKET_SIZE should be written to zero when setting up a new transfer.
For OUT endpoints, MULTI_PACKET_SIZE holds the total data size for the complete transfer. This value must be a multiple of the maximum packet size.

Downloaded from Arrow.com.

Bits 13:0 – BYTE_COUNT[13:0] Byte Count
These bits define the 14-bit value that is used for the byte count.
For IN endpoints, BYTE_COUNT holds the number of bytes to be sent in the next IN transaction.
For OUT endpoint or SETUP endpoints, BYTE_COUNT holds the number of bytes received upon the last OUT or SETUP transaction.

Downloaded from Arrow.com.

32.15.3 Extended Register

Name: EXTREG
Offset: 0x08
Reset: 0xXXXXXXXX
Property: NA

Bit	15	14	13	12	11	10	9	8
		VARIABLE[10:4]						
Access		R/W	R/W	R/W	R/W	R/W	R/W	R/W
Reset		0	0	0	0	0	0	0

Bit	7	6	5	4	3	2	1	0
	VARIABLE[3:0]				SUBPID[3:0]			
Access	R/W	R/W	R/W	R/W	R/W	R/W	R/W	R/W
Reset	0	0	0	x	0	0	0	x

Bits 14:4 – VARIABLE[10:0] Variable field send with extended token
These bits define the VARIABLE field of a received extended token. These bits are updated when the USB has answered by an handshake token ACK to a LPM transaction. See Section 2.1.1 Protocol Extension Token in the reference document “ENGINEERING CHANGE NOTICE, USB 2.0 Link Power Management Addendum”.
To support the USB2.0 Link Power Management addition the VARIABLE field should be read as described below.

VARIABLES	Description
VARIABLE[3:0]	bLinkState (1)
VARIABLE[7:4]	BESL (2)
VARIABLE[8]	bRemoteWake (1)
VARIABLE[10:9]	Reserved

1. For a definition of LPM Token bRemoteWake and bLinkState fields, refer to "Table 2-3 in the reference document ENGINEERING CHANGE NOTICE, USB 2.0 Link Power Management Addendum".
2. For a definition of LPM Token BESL field, refer to "Table 2-3 in the reference document ENGINEERING CHANGE NOTICE, USB 2.0 Link Power Management Addendum" and "Table X-X1 in Errata for ECN USB 2.0 Link Power Management.

Bits 3:0 – SUBPID[3:0] SUBPID field send with extended token
These bits define the SUBPID field of a received extended token. These bits are updated when the USB has answered by an handshake token ACK to a LPM transaction. See Section 2.1.1 Protocol Extension Token in the reference document “ENGINEERING CHANGE NOTICE, USB 2.0 Link Power Management Addendum”.

Downloaded from Arrow.com.

32.15.4 Device Status Bank

Name: STATUS_BK
Offset: 0x0A
Reset: 0xXXXXXXX
Property: NA

Original offset 0x0A & 0x1A

Bit	7	6	5	4	3	2	1	0
							ERRORFLOW	CRCERR
Access							R/W	R/W
Reset							x	x

Bit 1 – ERRORFLOW Error Flow Status
This bit defines the Error Flow Status.
This bit is set when a Error Flow has been detected during transfer from/towards this bank.
For OUT transfer, a NAK handshake has been sent.
For Isochronous OUT transfer, an overrun condition has occurred.
For IN transfer, this bit is not valid. EPSTATUS.TRFAIL0 and EPSTATUS.TRFAIL1 should reflect the flow errors.

Value	Description
0	No Error Flow detected.
1	A Error Flow has been detected.

Bit 0 – CRCERR CRC Error
This bit defines the CRC Error Status.
This bit is set when a CRC error has been detected in an isochronous OUT endpoint bank.
0.2.5 Host Registers - Common

Value	Description
0	No CRC Error.
1	CRC Error detected.

Downloaded from Arrow.com.

32.16 Host Registers - Common - Register Summary

Offset	Name	Bit Pos.	7	6	5	4	3	2	1	0
0x00 ... 0x07	Reserved									
0x08	CTRLB	7:0		TSTK	TSTJ	AUTORESUME	SPDCONF[1:0]		RESUME	
		15:8					L1RESUME	VBUSOK	BUSRESET	SOFE
0x0A	HSOFC	7:0	FLENCE				FLENC[3:0]			
0x0B	Reserved									
0x0C	STATUS	7:0	LINESTATE[1:0]				SPEED[1:0]			
0x0D ... 0x0F	Reserved									
0x10	FNUM	7:0	FNUM[4:0]					MFNUM[2:0]		
		15:8			FNUM[10:5]					
0x12	FLENHIGH	7:0	FLENHIGH[7:0]							
0x13	Reserved									
0x14	INTENCLR	7:0	RAMACER	UPRSM	DNRSM	WAKEUP	RST	HSOF		
		15:8							DDISC	DCONN
0x16 ... 0x17	Reserved									
0x18	INTENSET	7:0	RAMACER	UPRSM	DNRSM	WAKEUP	RST	HSOF		
		15:8							DDISC	DCONN
0x1A ... 0x1B	Reserved									
0x1C	INTFLAG	7:0	RAMACER	UPRSM	DNRSM	WAKEUP	RST	HSOF		
		15:8							DDISC	DCONN
0x1E ... 0x1F	Reserved									
0x20	PINTSMRY	7:0	EPINT7	EPINT6	EPINT5	EPINT4	EPINT3	EPINT2	EPINT1	EPINT0
		15:8								

32.17 Host Registers - Common - Register Description

Registers can be 8, 16, or 32 bits wide. Atomic 8-, 16-, and 32-bit accesses are supported. In addition, the 8-bit quarters and 16-bit halves of a 32-bit register, and the 8-bit halves of a 16-bit register can be accessed directly.

Some registers require synchronization when read and/or written. Synchronization is denoted by the "Read-Synchronized" and/or "Write-Synchronized" property in each individual register description.

Optional write-protection by the PAC - Peripheral Access Controller is denoted by the "PAC Write-Protection" property in each individual register description.

Some registers are enable-protected, meaning they can only be written when the module is disabled. Enable-protection is denoted by the "Enable-Protected" property in each individual register description.

Downloaded from Arrow.com.

32.17.1 Control B

Name: CTRLB
Offset: 0x08
Reset: 0x0000
Property: PAC Write-Protection

Bit	15	14	13	12	11	10	9	8
					L1RESUME	VBUSOK	BUSRESET	SOFE
Access					R/W	R/W	R/W	R/W
Reset					0	0	0	0

Bit	7	6	5	4	3	2	1	0
		TSTK	TSTJ	AUTORESUME	SPDCONF[1:0]		RESUME	
Access		R/W	R/W	R/W	R/W	R/W	R/W	
Reset		0	0	0	0	0	0	

Bit 11 – L1RESUME Send USB L1 Resume
Writing 0 to this bit has no effect.
1: Generates a USB L1 Resume on the USB bus. This bit should only be set when the Start-of-Frame generation is enabled (SOFE bit set). The duration of the USB L1 Resume is defined by the EXTREG.VARIABLE[7:4] bits field also known as BESL (See LPM ECN).See the EXTREG Register.
This bit is cleared when the USB L1 Resume has been sent or when a USB reset is requested.

Bit 10 – VBUSOK VBUS is OK
This notifies the USB HOST that USB operations can be started. When this bit is zero and even if the USB HOST is configured and enabled, HOST operation is halted. Setting this bit will allow HOST operation when the USB is configured and enabled.

Value	Description
0	The USB module is notified that the VBUS on the USB line is not powered.
1	The USB module is notified that the VBUS on the USB line is powered.

Bit 9 – BUSRESET Send USB Reset

Value	Description
0	Reset generation is disabled. It is written to zero when the USB reset is completed or when a device disconnection is detected. Writing zero has no effect.
1	Generates a USB Reset on the USB bus.

Bit 8 – SOFE Start-of-Frame Generation Enable

Value	Description
0	The SOF generation is disabled and the USB bus is in suspend state.
1	Generates SOF on the USB bus in full speed and keep it alive in low speed mode. This bit is automatically set at the end of a USB reset (INTFLAG.RST) or at the end of a downstream resume (INTFLAG.DNRSM) or at the end of L1 resume.

Bit 6 – TSTK Test mode K

Value	Description
0	The UTMI transceiver is in normal operation Mode
1	The UTMI transceiver generates high speed K state for test purposes.

Bit 5 – TSTJ Test mode J

Value	Description
0	The UTMI transceiver is in normal operation Mode
1	The UTMI transceiver generates high speed J state for test purposes.

Bit 4 – AUTORESUME Auto Resume Enable

Downloaded from Arrow.com.

Value	Description
0	The Auto Resume is disabled.
1	Enable Auto Resume

Bits 3:2 – SPDCONF[1:0] Speed Configuration for Host
These bits select the host speed configuration as shown below

Value	Description
0x0	Low, Full and High Speed capable
0x1	Reserved
0x2	Reserved
0x3	Low and Full Speed capable

Bit 1 – RESUME Send USB Resume
Writing 0 to this bit has no effect.
1: Generates a USB Resume on the USB bus.
This bit is cleared when the USB Resume has been sent or when a USB reset is requested.

Downloaded from Arrow.com.

32.17.2 Host Start-of-Frame Control

Name: HSOFC
Offset: 0x0A
Reset: 0x00
Property: PAC Write-Protection

During a very short period just before transmitting a Start-of-Frame, this register is locked. Thus, after writing, it is recommended to check the register value, and write this register again if necessary. This register is cleared upon a USB reset.

Bit	7	6	5	4	3	2	1	0
	FLENCE				FLENC[3:0]			
Access	R/W				R/W	R/W	R/W	R/W
Reset	0				0	0	0	0

Bit 7 – FLENCE Frame Length Control Enable
When this bit is '1', the time between Start-of-Frames can be tuned by up to +/-0.06% using FLENC[3:0].
Note: In Low Speed mode, FLENCE must be '0'.

FLENCE	Frame Timing	Internal Frame Length Down-Counter Load Value
0	Internal Frame Length (Full Speed)	11999 (1ms frame rate at 12MHz)
0	Internal Frame Length in Low and Full speed	59999 (1ms frame rate at 60MHz)
	Internal Frame Length in High speed	7499 (0.125ms micro-frame rate at 60MHz)
1	Beginning of Frame	FLENC[3:0]
	Internal Frame Length with Frame correction	11999 + FLENC[3:0] at all speeds.

Value	Description
0	Start-of-Frame is generated every 1ms.
1	Start-of-Frame generation depends on the signed value of FLENC[3:0]. USB Start-of-Frame period equals 1ms + (FLENC[3:0]/12000)ms

Bits 3:0 – FLENC[3:0] Frame Length Control
These bits define the signed value of the 4-bit FLENC that is added to the Internal Frame Length when FLENCE is '1'. The internal Frame length is the top value of the frame counter when FLENCE is zero.

Downloaded from Arrow.com.

32.17.3 Status

Name: STATUS
Offset: 0x0C
Reset: 0x00
Property: Read only

Bit	7	6	5	4	3	2	1	0
	LINESTATE[1:0]				SPEED[1:0]			
Access	R	R			R/W	R/W		
Reset	0	0			0	0		

Bits 7:6 – LINESTATE[1:0] USB Line State Status
These bits define the current line state DP/DM.

LINESTATE[1:0]	USB Line Status
0x0	SE0/RESET
0x1	FS-J or LS-K State
0x2	FS-K or LS-J State

Bits 3:2 – SPEED[1:0] Speed Status
These bits define the current speed used by the host.

SPEED[1:0]	Speed Status
0x0	Full-speed mode
0x1	Low-speed mode High-speed mode
0x2	Low-speed mode
0x3	Reserved

Downloaded from Arrow.com.

32.17.4 Host Frame Number

Name: FNUM
Offset: 0x10
Reset: 0x0000
Property: PAC Write-Protection

Bit	15	14	13	12	11	10	9	8
			FNUM[10:5]					
Access			R/W	R/W	R/W	R/W	R/W	R/W
Reset			0	0	0	0	0	0

Bit	7	6	5	4	3	2	1	0
	FNUM[4:0]					MFNUM[2:0]		
Access	R/W	R/W	R/W	R/W	R/W	R/W	R/W	R/W
Reset	0	0	0	0	0	0	0	0

Bits 13:3 – FNUM[10:0] Frame Number
These bits contains the current SOF number.
These bits can be written by software to initialize a new frame number value. In this case, at the next SOF, the FNUM field takes its new value and the MFNUM bits are cleared.
As the FNUM register lies across two consecutive byte addresses, writing byte-wise (8-bits) to the FNUM register may produce incorrect frame number generation. It is recommended to write FNUM register word-wise (32-bits) or half-word-wise (16-bits).

Bits 2:0 – MFNUM[2:0] Micro Frame Number
These bits are tied to zero when operating in full-speed mode.
These bits contains the current Micro Frame number (can vary from 0 to 7) updated every 125 us.

Downloaded from Arrow.com.

32.17.5 Host Frame Length

Name: FLENHIGH
Offset: 0x12
Reset: 0x00
Property: Read-Only

Bit	7	6	5	4	3	2	1	0
	FLENHIGH[7:0]							
Access	R	R	R	R	R	R	R	R
Reset	0	0	0	0	0	0	0	0

Bits 7:0 – FLENHIGH[7:0] Frame Length
These bits contains the 8 high-order bits of the internal frame counter.

Table 32-1. Counter Description vs. Speed

Host Register STATUS.SPEED	Description
Full Speed	With a USB clock running at 12MHz, counter length is 12000 to ensure a SOF generation every 1 ms.
Full Speed	With a USB clock running at 60MHz, counter length is 60000 to ensure a SOF generation every 1 ms.
High Speed	With a USB clock running at 60MHz, counter length is 7500 to ensure a SOF generation every 125 µs.

Downloaded from Arrow.com.

32.17.6 Host Interrupt Enable Register Clear

Name: INTENCLR
Offset: 0x14
Reset: 0x0000
Property: PAC Write-Protection

This register allows the user to disable an interrupt without doing a read-modify-write operation. Changes in this register will also be reflected in the Interrupt Enable Set (INTENSET) register.

Bit	15	14	13	12	11	10	9	8
							DDISC	DCONN
Access							R/W	R/W
Reset							0	0

Bit	7	6	5	4	3	2	1	0
	RAMACER	UPRSM	DNRSM	WAKEUP	RST	HSOF		
Access	R/W	R/W	R/W	R/W	R/W	R/W		
Reset	0	0	0	0	0	0		

Bit 9 – DDISC Device Disconnection Interrupt Disable
Writing a zero to this bit has no effect.
Writing a one to this bit will clear the Device Disconnection interrupt Enable bit and disable the corresponding interrupt request.

Value	Description
0	The Device Disconnection interrupt is disabled.
1	The Device Disconnection interrupt is enabled and an interrupt request will be generated when the Device Disconnection interrupt Flag is set.

Bit 8 – DCONN Device Connection Interrupt Disable
Writing a zero to this bit has no effect.
Writing a one to this bit will clear the Device Connection interrupt Enable bit and disable the corresponding interrupt request.

Value	Description
0	The Device Connection interrupt is disabled.
1	The Device Connection interrupt is enabled and an interrupt request will be generated when the Device Connection interrupt Flag is set.

Bit 7 – RAMACER RAM Access Interrupt Disable
Writing a zero to this bit has no effect.
Writing a one to this bit will clear the RAM Access interrupt Enable bit and disable the corresponding interrupt request.

Value	Description
0	The RAM Access interrupt is disabled.
1	The RAM Access interrupt is enabled and an interrupt request will be generated when the RAM Access interrupt Flag is set.

Bit 6 – UPRSM Upstream Resume from Device Interrupt Disable
Writing a zero to this bit has no effect.
Writing a one to this bit will clear the Upstream Resume interrupt Enable bit and disable the corresponding interrupt request.

Value	Description
0	The Upstream Resume interrupt is disabled.
1	The Upstream Resume interrupt is enabled and an interrupt request will be generated when the Upstream Resume interrupt Flag is set.

Downloaded from Arrow.com.

Bit 5 – DNRSM Down Resume Interrupt Disable
Writing a zero to this bit has no effect.
Writing a one to this bit will clear the Down Resume interrupt Enable bit and disable the corresponding interrupt request.

Value	Description
0	The Down Resume interrupt is disabled.
1	The Down Resume interrupt is enabled and an interrupt request will be generated when the Down Resume interrupt Flag is set.

Bit 4 – WAKEUP Wake Up Interrupt Disable
Writing a zero to this bit has no effect.
Writing a one to this bit will clear the Wake Up interrupt Enable bit and disable the corresponding interrupt request.

Value	Description
0	The Wake Up interrupt is disabled.
1	The Wake Up interrupt is enabled and an interrupt request will be generated when the Wake Up interrupt Flag is set.

Bit 3 – RST BUS Reset Interrupt Disable
Writing a zero to this bit has no effect.
Writing a one to this bit will clear the Bus Reset interrupt Enable bit and disable the corresponding interrupt request.

Value	Description
0	The Bus Reset interrupt is disabled.
1	The Bus Reset interrupt is enabled and an interrupt request will be generated when the Bus Reset interrupt Flag is set.

Bit 2 – HSOF Host Start-of-Frame Interrupt Disable
Writing a zero to this bit has no effect.
Writing a one to this bit will clear the Host Start-of-Frame interrupt Enable bit and disable the corresponding interrupt request.

Value	Description
0	The Host Start-of-Frame interrupt is disabled.
1	The Host Start-of-Frame interrupt is enabled and an interrupt request will be generated when the Host Start-of-Frame interrupt Flag is set.

Downloaded from Arrow.com.

32.17.7 Host Interrupt Enable Register Set

Name: INTENSET
Offset: 0x18
Reset: 0x0000
Property: PAC Write-Protection

This register allows the user to enable an interrupt without doing a read-modify-write operation. Changes in this register will also be reflected in the Interrupt Enable Clear (INTENCLR) register.

Bit	15	14	13	12	11	10	9	8
							DDISC	DCONN
Access							R/W	R/W
Reset							0	0

Bit	7	6	5	4	3	2	1	0
	RAMACER	UPRSM	DNRSM	WAKEUP	RST	HSOF		
Access	R/W	R/W	R/W	R/W	R/W	R/W		
Reset	0	0	0	0	0	0		

Bit 9 – DDISC Device Disconnection Interrupt Enable
Writing a zero to this bit has no effect.
Writing a one to this bit will set the Device Disconnection interrupt bit and enable the DDSIC interrupt.

Value	Description
0	The Device Disconnection interrupt is disabled.
1	The Device Disconnection interrupt is enabled.

Bit 8 – DCONN Device Connection Interrupt Enable
Writing a zero to this bit has no effect.
Writing a one to this bit will set the Device Connection interrupt bit and enable the DCONN interrupt.

Value	Description
0	The Device Connection interrupt is disabled.
1	The Device Connection interrupt is enabled.

Bit 7 – RAMACER RAM Access Interrupt Enable
Writing a zero to this bit has no effect.
Writing a one to this bit will set the RAM Access interrupt bit and enable the RAMACER interrupt.

Value	Description
0	The RAM Access interrupt is disabled.
1	The RAM Access interrupt is enabled.

Bit 6 – UPRSM Upstream Resume from the device Interrupt Enable
Writing a zero to this bit has no effect.
Writing a one to this bit will set the Upstream Resume interrupt bit and enable the UPRSM interrupt.

Value	Description
0	The Upstream Resume interrupt is disabled.
1	The Upstream Resume interrupt is enabled.

Bit 5 – DNRSM Down Resume Interrupt Enable
Writing a zero to this bit has no effect.
Writing a one to this bit will set the Down Resume interrupt Enable bit and enable the DNRSM interrupt.

Value	Description
0	The Down Resume interrupt is disabled.
1	The Down Resume interrupt is enabled.

Bit 4 – WAKEUP Wake Up Interrupt Enable
Writing a zero to this bit has no effect.

Downloaded from Arrow.com.

Writing a one to this bit will set the Wake Up interrupt Enable bit and enable the WAKEUP interrupt request.

Value	Description
0	The WakeUp interrupt is disabled.
1	The WakeUp interrupt is enabled.

Bit 3 – RST Bus Reset Interrupt Enable
Writing a zero to this bit has no effect.
Writing a one to this bit will set the Bus Reset interrupt Enable bit and enable the Bus RST interrupt.

Value	Description
0	The Bus Reset interrupt is disabled.
1	The Bus Reset interrupt is enabled.

Bit 2 – HSOF Host Start-of-Frame Interrupt Enable
Writing a zero to this bit has no effect.
Writing a one to this bit will set the Host Start-of-Frame interrupt Enable bit and enable the HSOF interrupt.

Value	Description
0	The Host Start-of-Frame interrupt is disabled.
1	The Host Start-of-Frame interrupt is enabled.

Downloaded from Arrow.com.

32.17.8 Host Interrupt Flag Status and Clear

Name: INTFLAG
Offset: 0x1C
Reset: 0x0000
Property: -

Bit	15	14	13	12	11	10	9	8
							DDISC	DCONN
Access							R/W	R/W
Reset							0	0

Bit	7	6	5	4	3	2	1	0
	RAMACER	UPRSM	DNRSM	WAKEUP	RST	HSOF		
Access	R/W	R/W	R/W	R/W	R/W	R/W		
Reset	0	0	0	0	0	0		

Bit 9 – DDISC Device Disconnection Interrupt Flag
This flag is cleared by writing a one to the flag.
This flag is set when the device has been removed from the USB Bus and will generate an interrupt if INTENCLR/SET.DDISC is one.
Writing a zero to this bit has no effect.
Writing a one to this bit clears the DDISC Interrupt Flag.

Bit 8 – DCONN Device Connection Interrupt Flag
This flag is cleared by writing a one to the flag.
This flag is set when a new device has been connected to the USB BUS and will generate an interrupt if INTENCLR/SET.DCONN is one.
Writing a zero to this bit has no effect.
Writing a one to this bit clears the DCONN Interrupt Flag.

Bit 7 – RAMACER RAM Access Interrupt Flag
This flag is cleared by writing a one to the flag.
This flag is set when a RAM access error occurs during an OUT stage and will generate an interrupt if INTENCLR/SET.RAMACER is one.
Writing a zero to this bit has no effect.

Bit 6 – UPRSM Upstream Resume from the Device Interrupt Flag
This flag is cleared by writing a one to the flag.
This flag is set when the USB has received an Upstream Resume signal from the Device and will generate an interrupt if INTENCLR/SET.UPRSM is one.
Writing a zero to this bit has no effect.

Bit 5 – DNRSM Down Resume Interrupt Flag
This flag is cleared by writing a one to the flag.
This flag is set when the USB has sent a Down Resume and will generate an interrupt if INTENCLR/SET.DRSM is one.
Writing a zero to this bit has no effect.

Bit 4 – WAKEUP Wake Up Interrupt Flag
This flag is cleared by writing a one.
This flag is set when:
l The host controller is in suspend mode (SOFE is zero) and an upstream resume from the device is detected.
l The host controller is in suspend mode (SOFE is zero) and an device disconnection is detected.
l The host controller is in operational state (VBUSOK is one) and an device connection is detected.
In all cases it will generate an interrupt if INTENCLR/SET.WAKEUP is one.

Downloaded from Arrow.com.

Writing a zero to this bit has no effect.

Bit 3 – RST Bus Reset Interrupt Flag
This flag is cleared by writing a one to the flag.
This flag is set when a Bus “Reset” has been sent to the Device and will generate an interrupt if INTENCLR/SET.RST is one.
Writing a zero to this bit has no effect.

Bit 2 – HSOF Host Start-of-Frame Interrupt Flag
This flag is cleared by writing a one to the flag.
This flag is set when a USB “Host Start-of-Frame” in Full Speed or a keep-alive in Low Speed has been sent (every 1 ms) and will generate an interrupt if INTENCLR/SET.HSOF is one.
The value of the FNUM register is updated.
Writing a zero to this bit has no effect.

Downloaded from Arrow.com.

32.17.9 Pipe Interrupt Summary

Name: PINTSMRY
Offset: 0x20
Reset: 0x0000
Property: Read-only

Bit	15	14	13	12	11	10	9	8
Access								
Reset								

Bit	7	6	5	4	3	2	1	0
	EPINT7	EPINT6	EPINT5	EPINT4	EPINT3	EPINT2	EPINT1	EPINT0
Access	R	R	R	R	R	R	R	R
Reset	0	0	0	0	0	0	0	0

Bits 0, 1, 2, 3, 4, 5, 6, 7 – EPINT
The flag EPINTn is set when an interrupt is triggered by the pipe n. See the PINTFLAG register in the Host Pipe Register section.
This bit will be cleared when there are no interrupts pending for Pipe n.
Writing to this bit has no effect.

Downloaded from Arrow.com.

32.18 Host Registers - Pipe - Register Summary

Offset	Name	Bit Pos.	7	6	5	4	3	2	1	0
0x00 ... 0xFF	Reserved									
0x0100	PCFGn	7:0			PTYPE[2:0]			BK	PTOKEN[1:0]	
0x0101 ... 0x0102	Reserved									
0x0103	BINTERVAL	7:0	BINTERVAL[7:0]							
0x0104	PSTATUSCLR	7:0	BK1RDY	BK0RDY		PFREEZE		CURBK		DTGL
0x0105	PSTATUSSET	7:0	BK1RDY	BK0RDY		PFREEZE		CURBK		DTGL
0x0106	PSTATUS	7:0	BK1RDY	BK0RDY		PFREEZE		CURBK		DTGL
0x0107	PINTFLAG	7:0			STALL	TXSTP	PERR	TRFAIL	TRCPT1	TRCPT0
0x0108	PINTENCLR	7:0			STALL	TXSTP	PERR	TRFAIL	TRCPT1	TRCPT0
0x0109	PINTENSET	7:0			STALL	TXSTP	PERR	TRFAIL	TRCPT1	TRCPT0

32.19 Host Registers - Pipe - Register Description

Registers can be 8, 16, or 32 bits wide. Atomic 8-, 16-, and 32-bit accesses are supported. In addition, the 8-bit quarters and 16-bit halves of a 32-bit register, and the 8-bit halves of a 16-bit register can be accessed directly.

Some registers require synchronization when read and/or written. Synchronization is denoted by the "Read-Synchronized" and/or "Write-Synchronized" property in each individual register description.

Optional write-protection by the PAC - Peripheral Access Controller is denoted by the "PAC Write-Protection" property in each individual register description.

Some registers are enable-protected, meaning they can only be written when the module is disabled. Enable-protection is denoted by the "Enable-Protected" property in each individual register description

Downloaded from Arrow.com.

32.19.1 Host Pipe n Configuration

Name: PCFGn
Offset: 0x100
Reset: 0x00
Property: PAC Write-Protection

Bit	7	6	5	4	3	2	1	0
			PTYPE[2:0]			BK	PTOKEN[1:0]	
Access			R/W	R/W	R/W	R/W	R/W	R/W
Reset			0	0	0	0	0	0

Bits 5:3 – PTYPE[2:0] Type of the Pipe
These bits contains the pipe type.

PTYPE[2:0]	Description
0x0	Pipe is disabled
0x1	Pipe is enabled and configured as CONTROL
0x2	Pipe is enabled and configured as ISO
0x3	Pipe is enabled and configured as BULK
0x4	Pipe is enabled and configured as INTERRUPT
0x5	Pipe is enabled and configured as EXTENDED
0x06-0x7	Reserved

These bits are cleared upon sending a USB reset.

Bit 2 – BK Pipe Bank
This bit selects the number of banks for the pipe.
For control endpoints writing a zero to this bit is required as only Bank0 is used for Setup/In/Out transactions.
This bit is cleared when a USB reset is sent.

BK (1)	Description
0x0	Single-bank endpoint
0x1	Dual-bank endpoint

1. Bank field is ignored when PTYPE is configured as EXTENDED.

Value	Description
0	A single bank is used for the pipe.
1	A dual bank is used for the pipe.

Bits 1:0 – PTOKEN[1:0] Pipe Token
These bits contains the pipe token.

PTOKEN[1:0](1)	Description
0x0	SETUP(2)
0x1	IN
0x2	OUT
0x3	Reserved

1. PTOKEN field is ignored when PTYPE is configured as EXTENDED.
2. Available only when PTYPE is configured as CONTROL

Theses bits are cleared upon sending a USB reset.

Downloaded from Arrow.com.

32.19.2 Interval for the Bulk-Out/Ping Transaction

Name: BINTERVAL
Offset: 0x103
Reset: 0x00
Property: PAC Write-Protection

Bit	7	6	5	4	3	2	1	0
	BINTERVAL[7:0]							
Access	R/W	R/W	R/W	R/W	R/W	R/W	R/W	R/W
Reset	0	0	0	0	0	0	0	0

Bits 7:0 – BINTERVAL[7:0] BINTERVAL
These bits contains the Ping/Bulk-out period.
These bits are cleared when a USB reset is sent or when PEN[n] is zero.

BINTERVAL	Description
=0	Multiple consecutive OUT token is sent in the same frame until it is acked by the peripheral
>0	One OUT token is sent every BINTERVAL frame until it is acked by the peripheral

PCFGn.PINGEN	BINTERVAL	Description
0	=0	Multiple consecutive OUT token is sent in the same frame until it is acked by the peripheral
0	>0	One OUT token is sent every BINTERVAL micro frame until it is acked by the peripheral
1	=0	Multiple consecutive PING token is sent in the same frame until it is acked by the peripheral
1	>0	One PING token is sent every BINTERVAL frame until it is acked by the peripheral

Depending from the type of pipe the desired period is defined as:

PTYPE	Description
Interrupt	1 ms to 255 ms
Isochronous	2^(Binterval) * 1 ms
Bulk or control	1 ms to 255 ms
EXT LPM	bInterval ignored. Always 1 ms when a NYET is received.

Downloaded from Arrow.com.

32.19.3 Pipe Status Clear n

Name: PSTATUSCLR
Offset: 0x104
Reset: 0x00
Property: PAC Write-Protection

Bit	7	6	5	4	3	2	1	0
	BK1RDY	BK0RDY		PFREEZE		CURBK		DTGL
Access	W	W		W		W		W
Reset	0	0		0		0		0

Bit 7 – BK1RDY Bank 1 Ready Clear
Writing a zero to this bit has no effect.
Writing a one to this bit will clear PSTATUS.BK1RDY bit.

Bit 6 – BK0RDY Bank 0 Ready Clear
Writing a zero to this bit has no effect.
Writing a one to this bit will clear PSTATUS.BK0RDY bit.

Bit 4 – PFREEZE Pipe Freeze Clear
Writing a zero to this bit has no effect.
Writing a one to this bit will clear PSTATUS.PFREEZE bit.

Bit 2 – CURBK Current Bank Clear
Writing a zero to this bit has no effect.
Writing a one to this bit will clear PSTATUS.CURBK bit.

Bit 0 – DTGL Data Toggle Clear
Writing a zero to this bit has no effect.
Writing a one to this bit will clear PSTATUS.DTGL bit.

Downloaded from Arrow.com.

32.19.4 Pipe Status Set Register n

Name: PSTATUSSET
Offset: 0x105
Reset: 0x00
Property: PAC Write-Protection

Bit	7	6	5	4	3	2	1	0
	BK1RDY	BK0RDY		PFREEZE		CURBK		DTGL
Access	W	W		W		W		W
Reset	0	0		0		0		0

Bit 7 – BK1RDY Bank 1 Ready Set
Writing a zero to this bit has no effect.
Writing a one to this bit will set the bit PSTATUS.BK1RDY.

Bit 6 – BK0RDY Bank 0 Ready Set
Writing a zero to this bit has no effect.
Writing a one to this bit will set the bit PSTATUS.BK0RDY.

Bit 4 – PFREEZE Pipe Freeze Set
Writing a zero to this bit has no effect.
Writing a one to this bit will set PSTATUS.PFREEZE bit.

Bit 2 – CURBK Current Bank Set
Writing a zero to this bit has no effect.
Writing a one to this bit will set PSTATUS.CURBK bit.

Bit 0 – DTGL Data Toggle Set
Writing a zero to this bit has no effect.
Writing a one to this bit will set PSTATUS.DTGL bit.

Downloaded from Arrow.com.

32.19.5 Pipe Status Register n

Name: PSTATUS
Offset: 0x106
Reset: 0x00
Property: PAC Write-Protection

Bit	7	6	5	4	3	2	1	0
	BK1RDY	BK0RDY		PFREEZE		CURBK		DTGL
Access	R	R		R		R		R
Reset	0	0		0		0		0

Bit 7 – BK1RDY Bank 1 is ready
Writing a one to the bit EPSTATUSCLR.BK1RDY will clear this bit.
Writing a one to the bit EPSTATUSSET.BK1RDY will set this bit.
This bank is not used for Control pipe.

Value	Description
0	The bank number 1 is not ready: For IN the bank is empty. For Control/OUT the bank is not yet fill in.
1	The bank number 1 is ready: For IN the bank is filled full. For Control/OUT the bank is filled in.

Bit 6 – BK0RDY Bank 0 is ready
Writing a one to the bit EPSTATUSCLR.BK0RDY will clear this bit.
Writing a one to the bit EPSTATUSSET.BK0RDY will set this bit.
This bank is the only one used for Control pipe.

Value	Description
0	The bank number 0 is not ready: For IN the bank is not empty. For Control/OUT the bank is not yet fill in.
1	The bank number 0 is ready: For IN the bank is filled full. For Control/OUT the bank is filled in.

Bit 4 – PFREEZE Pipe Freeze
Writing a one to the bit EPSTATUSCLR.PFREEZE will clear this bit.
Writing a one to the bit EPSTATUSSET.PFREEZE will set this bit.
This bit is also set by the hardware:

- When a STALL handshake has been received.
- After a PIPE has been enabled (rising of bit PEN.N).
- When an LPM transaction has completed whatever handshake is returned or the transaction was timed-out.
- When a pipe transfer was completed with a pipe error. See the PINTFLAG register.

When PFREEZE bit is set while a transaction is in progress on the USB bus, this transaction will be properly completed. PFREEZE bit will be read as “1” only when the ongoing transaction will have been completed.

Value	Description
0	The Pipe operates in normal operation.
1	The Pipe is frozen and no additional requests will be sent to the device on this pipe address.

Bit 2 – CURBK Current Bank

Value	Description
0	The bank0 is the bank that will be used in the next single/multi USB packet.
1	The bank1 is the bank that will be used in the next single/multi USB packet.

Bit 0 – DTGL Data Toggle Sequence
Writing a one to the bit EPSTATUSCLR.DTGL will clear this bit.
Writing a one to the bit EPSTATUSSET.DTGL will set this bit.
This bit is toggled automatically by hardware after a data transaction.
This bit will reflect the data toggle in regards of the token type (IN/OUT/SETUP).

Value	Description
0	The PID of the next expected transaction will be zero: data 0.

Downloaded from Arrow.com.

Value	Description
1	The PID of the next expected transaction will be one: data 1.

Downloaded from Arrow.com.

32.19.6 Host Pipe Interrupt Flag Register

Name: PINTFLAG
Offset: 0x107
Reset: 0x00
Property: -

Bit	7	6	5	4	3	2	1	0
			STALL	TXSTP	PERR	TRFAIL	TRCPT1	TRCPT0
Access			R/W	R/W	R/W	R/W	R/W	R/W
Reset			0	0	0	0	0	2

Bit 5 – STALL STALL Received Interrupt Flag
This flag is cleared by writing a one to the flag.
This flag is set when a stall occurs and will generate an interrupt if PINTENCLR/SET.STALL is one.
Writing a zero to this bit has no effect.
Writing a one to this bit clears the STALL Interrupt Flag.

Bit 4 – TXSTP Transmitted Setup Interrupt Flag
This flag is cleared by writing a one to the flag.
This flag is set when a Transfer Complete occurs and will generate an interrupt if PINTENCLR/SET.TXSTP is one.
Writing a zero to this bit has no effect.
Writing a one to this bit clears the TXSTP Interrupt Flag.

Bit 3 – PERR Pipe Error Interrupt Flag
This flag is cleared by writing a one to the flag.
This flag is set when a pipe error occurs and will generate an interrupt if PINTENCLR/SET.PERR is one.
Writing a zero to this bit has no effect.
Writing a one to this bit clears the PERR Interrupt Flag.

Bit 2 – TRFAIL Transfer Fail Interrupt Flag
This flag is cleared by writing a one to the flag.
This flag is set when a Transfer Fail occurs and will generate an interrupt if PINTENCLR/SET.TRFAIL is one.
Writing a zero to this bit has no effect.
Writing a one to this bit clears the TRFAIL Interrupt Flag.

Bits 0, 1 – TRCPT Transfer Complete x interrupt Flag
This flag is cleared by writing a one to the flag.
This flag is set when a Transfer complete occurs and will generate an interrupt if PINTENCLR/SET.TRCPT is one.
PINTFLAG.TRCPT is set for a single bank IN/OUT pipe or a double bank IN/OUT pipe when current bank is 0.
Writing a zero to this bit has no effect.
Writing a one to this bit clears the TRCPT Interrupt Flag.

Downloaded from Arrow.com.

32.19.7 Host Pipe Interrupt Clear Register

Name: PINTENCLR
Offset: 0x108
Reset: 0x00
Property: PAC Write-Protection

This register allows the user to disable an interrupt without doing a read-modify-write operation. Changes in this register will also be reflected in the Pipe Interrupt Enable Set (PINTENSET) register.

This register is cleared by USB reset or when PEN[n] is zero.

Bit	7	6	5	4	3	2	1	0
			STALL	TXSTP	PERR	TRFAIL	TRCPT1	TRCPT0
Access			R/W	R/W	R/W	R/W	R/W	R/W
Reset			0	0	0	0	0	2

Bit 5 – STALL Received Stall Interrupt Disable
Writing a zero to this bit has no effect.
Writing a one to this bit will clear the Received Stall interrupt Enable bit and disable the corresponding interrupt request.

Value	Description
0	The received Stall interrupt is disabled.
1	The received Stall interrupt is enabled and an interrupt request will be generated when the received Stall interrupt Flag is set.

Bit 4 – TXSTP Transmitted Setup Interrupt Disable
Writing a zero to this bit has no effect.
Writing a one to this bit will clear the Transmitted Setup interrupt Enable bit and disable the corresponding interrupt request.

Value	Description
0	The Transmitted Setup interrupt is disabled.
1	The Transmitted Setup interrupt is enabled and an interrupt request will be generated when the Transmitted Setup interrupt Flag is set.

Bit 3 – PERR Pipe Error Interrupt Disable
Writing a zero to this bit has no effect.
Writing a one to this bit will clear the Pipe Error interrupt Enable bit and disable the corresponding interrupt request.

Value	Description
0	The Pipe Error interrupt is disabled.
1	The Pipe Error interrupt is enabled and an interrupt request will be generated when the Pipe Error interrupt Flag is set.

Bit 2 – TRFAIL Transfer Fail Interrupt Disable
Writing a zero to this bit has no effect.
Writing a one to this bit will clear the Transfer Fail interrupt Enable bit and disable the corresponding interrupt request.

Value	Description
0	The Transfer Fail interrupt is disabled.
1	The Transfer Fail interrupt is enabled and an interrupt request will be generated when the Transfer Fail interrupt Flag is set.

Bits 0, 1 – TRCPT Transfer Complete Bank x interrupt Disable
Writing a zero to this bit has no effect.
Writing a one to this bit will clear the Transfer Complete interrupt Enable bit x and disable the corresponding interrupt request.

Value	Description
0	The Transfer Complete Bank x interrupt is disabled.

Downloaded from Arrow.com.

Value	Description
1	The Transfer Complete Bank x interrupt is enabled and an interrupt request will be generated when the Transfer Complete interrupt x Flag is set.

Downloaded from Arrow.com.

32.19.8 Host Interrupt Pipe Set Register

Name: PINTENSET
Offset: 0x109
Reset: 0x00
Property: PAC Write-Protection

This register allows the user to enable an interrupt without doing a read-modify-write operation. Changes in this register will also be reflected in the Pipe Interrupt Enable Set (PINTENCLR) register.

This register is cleared by USB reset or when PEN[n] is zero.

Bit	7	6	5	4	3	2	1	0
			STALL	TXSTP	PERR	TRFAIL	TRCPT1	TRCPT0
Access			R/W	R/W	R/W	R/W	R/W	R/W
Reset			0	0	0	0	0	2

Bit 5 – STALL Stall Interrupt Enable
Writing a zero to this bit has no effect.
Writing a one to this bit will enable the Stall interrupt.

Value	Description
0	The Stall interrupt is disabled.
1	The Stall interrupt is enabled.

Bit 4 – TXSTP Transmitted Setup Interrupt Enable
Writing a zero to this bit has no effect.
Writing a one to this bit will enable the Transmitted Setup interrupt.

Value	Description
0	The Transmitted Setup interrupt is disabled.
1	The Transmitted Setup interrupt is enabled.

Bit 3 – PERR Pipe Error Interrupt Enable
Writing a zero to this bit has no effect.
Writing a one to this bit will enable the Pipe Error interrupt.

Value	Description
0	The Pipe Error interrupt is disabled.
1	The Pipe Error interrupt is enabled.

Bit 2 – TRFAIL Transfer Fail Interrupt Enable
Writing a zero to this bit has no effect.
Writing a one to this bit will enable the Transfer Fail interrupt.

Value	Description
0	The Transfer Fail interrupt is disabled.
1	The Transfer Fail interrupt is enabled.

Bits 0, 1 – TRCPT Transfer Complete x interrupt Enable
Writing a zero to this bit has no effect.
Writing a one to this bit will enable the Transfer Complete interrupt Enable bit x.
0.2.7 Host Registers - Pipe RAM

Value	Description
0	The Transfer Complete x interrupt is disabled.
1	The Transfer Complete x interrupt is enabled.

Downloaded from Arrow.com.

32.20 Pipe Descriptor Structure

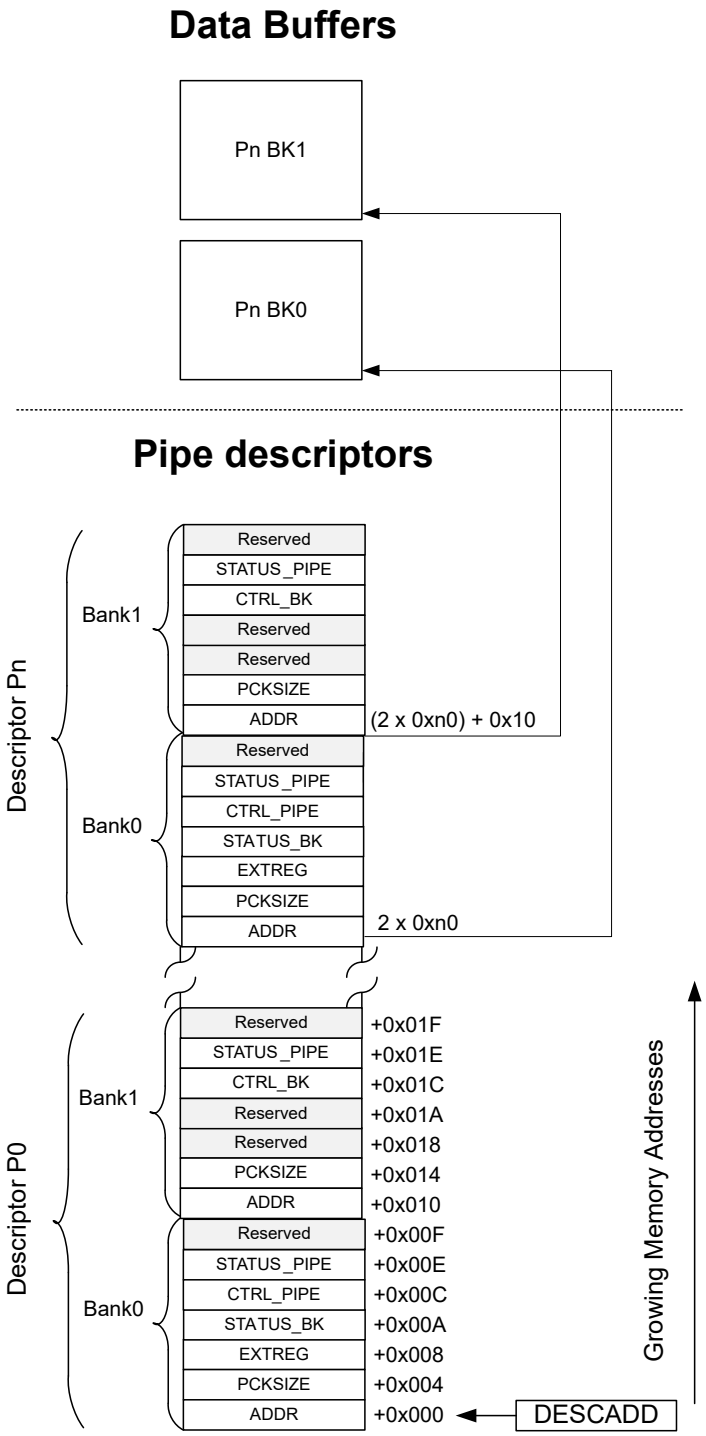

Downloaded from Arrow.com.

32.21 Host Registers - Pipe RAM - Register Summary

Offset	Name	Bit Pos.	7	6	5	4	3	2	1	0
0x00	ADDR	7:0	ADDR[7:0]							
		15:8	ADDR[15:8]							
		23:16	ADDR[23:16]							
		31:24	ADDR[31:24]							
0x04	PCKSIZE	7:0								
		15:8	MULTI_PACKET_SIZE[1:0]		BYTE_COUNT[5:0]					
		23:16	MULTI_PACKET_SIZE[9:2]							
		31:24	AUTO_ZLP	SIZE[2:0]			MULTI_PACKET_SIZE[13:10]			
0x08	EXTREG	7:0	VARIABLE[3:0]				SUBPID[3:0]			
		15:8		VARIABLE[10:4]						
0x0A	STATUS_BK	7:0							ERRORFLOW	CRCERR
0x0B	Reserved									
0x0C	CTRL_PIPE	7:0		PDADDR[6:0]						
		15:8	PERMAX[3:0]				PEPNUM[3:0]			
0x0E	STATUS_PIPE	7:0	ERCNT[2:0]			CRC16ER	TOUTER	PIDER	DAPIDER	DTGLER
		15:8								

32.22 Host Registers - Pipe RAM - Register Description

Registers can be 8, 16, or 32 bits wide. Atomic 8-, 16-, and 32-bit accesses are supported. In addition, the 8-bit quarters and 16-bit halves of a 32-bit register, and the 8-bit halves of a 16-bit register can be accessed directly.

Some registers require synchronization when read and/or written. Synchronization is denoted by the "Read-Synchronized" and/or "Write-Synchronized" property in each individual register description.

Optional write-protection by the PAC - Peripheral Access Controller is denoted by the "PAC Write-Protection" property in each individual register description.

Some registers are enable-protected, meaning they can only be written when the module is disabled. Enable-protection is denoted by the "Enable-Protected" property in each individual register description.

Downloaded from Arrow.com.

32.22.1 Address of the Data Buffer

Name: ADDR
Offset: 0x00
Reset: 0xxxxxxxx
Property: NA

Original offset 0x00 & 0x10

Bit	31	30	29	28	27	26	25	24
	ADDR[31:24]							
Access	R/W	R/W	R/W	R/W	R/W	R/W	R/W	R/W
Reset	0	0	0	0	0	0	0	0

Bit	23	22	21	20	19	18	17	16
	ADDR[23:16]							
Access	R/W	R/W	R/W	R/W	R/W	R/W	R/W	R/W
Reset	0	0	0	0	0	0	0	0

Bit	15	14	13	12	11	10	9	8
	ADDR[15:8]							
Access	R/W	R/W	R/W	R/W	R/W	R/W	R/W	R/W
Reset	0	0	0	0	0	0	0	0

Bit	7	6	5	4	3	2	1	0
	ADDR[7:0]							
Access	R/W	R/W	R/W	R/W	R/W	R/W	R/W	R/W
Reset	0	0	0	0	0	0	0	x

Bits 31:0 – ADDR[31:0] Data Pointer Address Value
These bits define the data pointer address as an absolute double word address in RAM. The two least significant bits must be zero to ensure the descriptor is 32-bit aligned.

Downloaded from Arrow.com.

32.22.2 Packet Size

Name: PCKSIZE
Offset: 0x04
Reset: 0xXXXXXXX
Property: NA

Original offset 0x04 & 0x14

Bit	31	30	29	28	27	26	25	24
	AUTO_ZLP	SIZE[2:0]			MULTI_PACKET_SIZE[13:10]			
Access	R/W	R/W	R/W	R/W	R/W	R/W	R/W	R/W
Reset	x	0	0	x	0	0	0	0

Bit	23	22	21	20	19	18	17	16
	MULTI_PACKET_SIZE[9:2]							
Access	R/W	R/W	R/W	R/W	R/W	R/W	R/W	R/W
Reset	0	0	0	0	0	0	0	0

Bit	15	14	13	12	11	10	9	8
	MULTI_PACKET_SIZE[1:0]		BYTE_COUNT[5:0]					
Access	R/W	R/W	R/W	R/W	R/W	R/W	R/W	R/W
Reset	0	x	0	0	0	0	0	x

Bit	7	6	5	4	3	2	1	0
Access								
Reset								

Bit 31 – AUTO_ZLP Automatic Zero Length Packet
This bit defines the automatic Zero Length Packet mode of the pipe.
When enabled, the USB module will manage the ZLP handshake by hardware. This bit is for OUT pipes only. When disabled the handshake should be managed by firmware.

Value	Description
0	Automatic Zero Length Packet is disabled.
1	Automatic Zero Length Packet is enabled.

Bits 30:28 – SIZE[2:0] Pipe size
These bits contains the size of the pipe.
Theses bits are cleared upon sending a USB reset.

SIZE[2:0]	Description
0x0	8 Byte
0x1	16 Byte
0x2	32 Byte
0x3	64 Byte
0x4	128 Byte(1)
0x5	256 Byte(1)
0x6	512 Byte(1)
0x7	1024 Byte in HS mode(1) 1023 Byte in FS mode(1)

Note:
1. For Isochronous pipe only.

Bits 27:14 – MULTI_PACKET_SIZE[13:0] Multi Packet IN or OUT size
These bits define the 14-bit value that is used for multi-packet transfers.

Downloaded from Arrow.com.

For IN pipes, MULTI_PACKET_SIZE holds the total number of bytes sent. MULTI_PACKET_SIZE should be written to zero when setting up a new transfer.
For OUT pipes, MULTI_PACKET_SIZE holds the total data size for the complete transfer. This value must be a multiple of the maximum packet size.

Bits 13:8 – BYTE_COUNT[5:0] Byte Count
These bits define the 14-bit value that contains number of bytes sent in the last OUT or SETUP transaction for an OUT pipe, or of the number of bytes to be received in the next IN transaction for an input pipe.

Downloaded from Arrow.com.

32.22.3 Extended Register

Name: EXTREG
Offset: 0x08
Reset: 0xXXXXXXXX
Property: NA

Bit	15	14	13	12	11	10	9	8
		VARIABLE[10:4]						
Access		R/W	R/W	R/W	R/W	R/W	R/W	R/W
Reset		0	0	0	0	0	0	0

Bit	7	6	5	4	3	2	1	0
	VARIABLE[3:0]				SUBPID[3:0]			
Access	R/W	R/W	R/W	R/W	R/W	R/W	R/W	R/W
Reset	0	0	0	x	0	0	0	x

Bits 14:4 – VARIABLE[10:0] Variable field send with extended token
These bits define the VARIABLE field sent with extended token. See “Section 2.1.1 Protocol Extension Token in the reference document ENGINEERING CHANGE NOTICE, USB 2.0 Link Power Management Addendum.”
To support the USB2.0 Link Power Management addition the VARIABLE field should be set as described below.

VARIABLE	Description
VARIABLE[3:0]	bLinkState(1)
VARIABLE[7:4]	BESL (See LPM ECN)(2)
VARIABLE[8]	bRemoteWake(1)
VARIABLE[10:9]	Reserved

Notes:

1. For a definition of LPM Token bRemoteWake and bLinkState fields, refer to "Table 2-3 in the reference document ENGINEERING CHANGE NOTICE, USB 2.0 Link Power Management Addendum".
2. For a definition of LPM Token BESL field, refer to "Table 2-3 in the reference document ENGINEERING CHANGE NOTICE, USB 2.0 Link Power Management Addendum" and "Table X-X1 in Errata for ECN USB 2.0 Link Power Management.

Bits 3:0 – SUBPID[3:0] SUBPID field send with extended token
These bits define the SUBPID field sent with extended token. See “Section 2.1.1 Protocol Extension Token in the reference document ENGINEERING CHANGE NOTICE, USB 2.0 Link Power Management Addendum”.
To support the USB2.0 Link Power Management addition the SUBPID field should be set as described in “Table 2.2 SubPID Types in the reference document ENGINEERING CHANGE NOTICE, USB 2.0 Link Power Management Addendum”.

Downloaded from Arrow.com.

32.22.4 Host Status Bank

Name: STATUS_BK
Offset: 0x0A
Reset: 0xXXXXXXX
Property: NA

Original offset 0x0A & 0x1A

Bit	7	6	5	4	3	2	1	0
							ERRORFLOW	CRCERR
Access							R/W	R/W
Reset							x	x

Bit 1 – ERRORFLOW Error Flow Status
This bit defines the Error Flow Status.
This bit is set when a Error Flow has been detected during transfer from/towards this bank.
For IN transfer, a NAK handshake has been received. For OUT transfer, a NAK handshake has been received. For Isochronous IN transfer, an overrun condition has occurred. For Isochronous OUT transfer, an underflow condition has occurred.

Value	Description
0	No Error Flow detected.
1	A Error Flow has been detected.

Bit 0 – CRCERR CRC Error
This bit defines the CRC Error Status.
This bit is set when a CRC error has been detected in an isochronous IN endpoint bank.

Value	Description
0	No CRC Error.
1	CRC Error detected.

Downloaded from Arrow.com.

32.22.5 Host Control Pipe

Name: CTRL_PIPE
Offset: 0x0C
Reset: 0xXXXX
Property: PAC Write-Protection, Write-Synchronized, Read-Synchronized

Bit	15	14	13	12	11	10	9	8
	PERMAX[3:0]				PEPNUM[3:0]			
Access	R/W	R/W	R/W	R/W	R/W	R/W	R/W	R/W
Reset	0	0	0	x	0	0	0	x

Bit	7	6	5	4	3	2	1	0
		PDADDR[6:0]						
Access		R/W	R/W	R/W	R/W	R/W	R/W	R/W
Reset		0	0	0	0	0	0	x

Bits 15:12 – PERMAX[3:0] Pipe Error Max Number
These bits define the maximum number of error for this Pipe before freezing the pipe automatically.

Bits 11:8 – PEPNUM[3:0] Pipe EndPoint Number
These bits define the number of endpoint for this Pipe.

Bits 6:0 – PDADDR[6:0] Pipe Device Address
These bits define the Device Address for this pipe.

Downloaded from Arrow.com.

32.22.6 Host Status Pipe

Name: STATUS_PIPE
Offset: 0x0E
Reset: 0xXXXXXXX
Property: PAC Write-Protection, Write-Synchronized, Read-Synchronized

Original offset 0x0E & 0x1E

Bit	15	14	13	12	11	10	9	8
Access								
Reset								

Bit	7	6	5	4	3	2	1	0
	ERCNT[2:0]			CRC16ER	TOUTER	PIDER	DAPIDER	DTGLER
Access	R/W	R/W	R/W	R/W	R/W	R/W	R/W	R/W
Reset	0	0	x	x	x	x	x	x

Bits 7:5 – ERCNT[2:0] Pipe Error Counter
These bits define the number of errors detected on the pipe.

Bit 4 – CRC16ER CRC16 ERROR
This bit defines the CRC16 Error Status.
This bit is set when a CRC 16 error has been detected during a IN transactions.

Value	Description
0	No CRC 16 Error detected.
1	A CRC 16 error has been detected.

Bit 3 – TOUTER TIME OUT ERROR
This bit defines the Time Out Error Status.
This bit is set when a Time Out error has been detected during a USB transaction.

Value	Description
0	No Time Out Error detected.
1	A Time Out error has been detected.

Bit 2 – PIDER PID ERROR
This bit defines the PID Error Status.
This bit is set when a PID error has been detected during a USB transaction.

Value	Description
0	No PID Error detected.
1	A PID error has been detected.

Bit 1 – DAPIDER Data PID ERROR
This bit defines the PID Error Status.
This bit is set when a Data PID error has been detected during a USB transaction.

Value	Description
0	No Data PID Error detected.
1	A Data PID error has been detected.

Bit 0 – DTGLER Data Toggle Error
This bit defines the Data Toggle Error Status.
This bit is set when a Data Toggle Error has been detected.

Value	Description
0	No Data Toggle Error.
1	Data Toggle Error detected.

Downloaded from Arrow.com.

33. ADC – Analog-to-Digital Converter

33.1 Overview

The Analog-to-Digital Converter (ADC) converts analog signals to digital values. The ADC has 12-bit resolution, and is capable of converting up to 350ksps. The input selection is flexible, and both differential and single-ended measurements can be performed. An optional gain stage is available to increase the dynamic range. In addition, several internal signal inputs are available. The ADC can provide both signed and unsigned results.

ADC measurements can be started by either application software or an incoming event from another peripheral in the device. ADC measurements can be started with predictable timing, and without software intervention.

Both internal and external reference voltages can be used.

An integrated temperature sensor is available for use with the ADC. The bandgap voltage as well as the scaled I/O and core voltages can also be measured by the ADC.

The ADC has a compare function for accurate monitoring of user-defined thresholds, with minimum software intervention required.

The ADC may be configured for 8-, 10- or 12-bit results, reducing the conversion time. ADC conversion results are provided left- or right-adjusted, which eases calculation when the result is represented as a signed value. It is possible to use DMA to move ADC results directly to memory or peripherals when conversions are done.

33.2 Features

- 8-, 10- or 12-bit resolution
- Up to 350,000 samples per second (350ksps)
- Differential and single-ended inputs
  - Up to 32 analog input
  - 25 positive and 10 negative, including internal and external
- Five internal inputs
  - Bandgap
  - Temperature sensor
  - DAC
  - Scaled core supply
  - Scaled I/O supply
- 1/2x to 16x gain
- Single, continuous and pin-scan conversion options
- Windowing monitor with selectable channel
- Conversion range:
  - V_{ref} [1v to V_{DDANA} - 0.6V]
  - ADCx * GAIN [0V to -V_{ref}]
- Built-in internal reference and external reference options
  - Four bits for reference selection
- Event-triggered conversion for accurate timing (one event input)
- Optional DMA transfer of conversion result
- Hardware gain and offset compensation
- Averaging and oversampling with decimation to support, up to 16-bit result
- Selectable sampling time

© 2021 Microchip Technology Inc. and its subsidiaries

Downloaded from Arrow.com.

33.3 Block Diagram

Figure 33-1. ADC Block Diagram

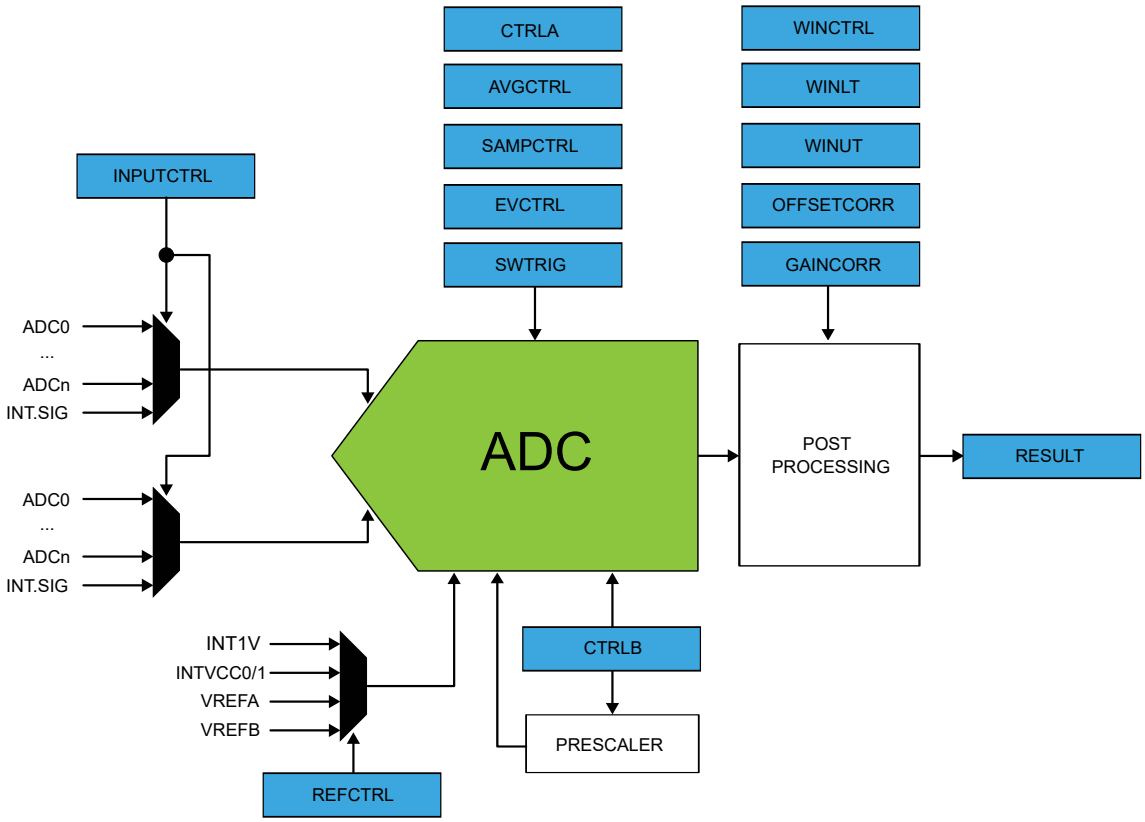

Note: INT1V is the buffered internal reference of 1.0V, derived from the internal 1.1V bandgap reference.

33.4 Signal Description

Signal Name	Type	Description
VREFA	Analog input	External reference voltage A
VREFB	Analog input	External reference voltage B
ADC[19..0](1)	Analog input	Analog input channels

Note: Refer to *Configuration Summary* for details on exact number of analog input channels.

Note: Refer to *I/O Multiplexing and Considerations* for details on the pin mapping for this peripheral. One signal can be mapped on several pins.

Related Links

7. I/O Multiplexing and Considerations
2. Configuration Summary

33.5 Product Dependencies

In order to use this peripheral, other parts of the system must be configured correctly, as described below.

Downloaded from Arrow.com.

33.5.1 I/O Lines

Using the ADC's I/O lines requires the I/O pins to be configured using the port configuration (PORT).

Related Links

23. PORT - I/O Pin Controller

33.5.2 Power Management

The ADC will continue to operate in any Sleep mode where the selected source clock is running. The ADC's interrupts, except the OVERRUN interrupt, can be used to wake up the device from sleep modes. Events connected to the event system can trigger other operations in the system without exiting sleep modes.

Related Links

16. PM – Power Manager

33.5.3 Clocks

The ADC bus clock (CLK_APB_ADCx) can be enabled in the Main Clock, which also defines the default state.

The ADC requires a generic clock (GCLK_ADC). This clock must be configured and enabled in the Generic Clock Controller (GCLK) before using the ADC.

A generic clock is asynchronous to the bus clock. Due to this asynchronicity, writes to certain registers will require synchronization between the clock domains. Refer to *Synchronization* for further details.

Related Links

16.6.2.6 Peripheral Clock Masking

15. GCLK - Generic Clock Controller

33.5.4 DMA

The DMA request line is connected to the DMA Controller (DMAC). Using the ADC DMA requests requires the DMA Controller to be configured first.

Related Links

20. DMAC – Direct Memory Access Controller

33.5.5 Interrupts

The interrupt request line is connected to the interrupt controller. Using the ADC interrupt requires the interrupt controller to be configured first.

Related Links

11.2 Nested Vector Interrupt Controller

33.5.6 Events

The events are connected to the Event System.

Related Links

24. EVSYS – Event System

33.5.7 Debug Operation

When the CPU is halted in debug mode the ADC will halt normal operation. The ADC can be forced to continue operation during debugging.

33.5.8 Register Access Protection

All registers with write-access are optionally write-protected by the peripheral access controller (PAC), except the following register:

- Interrupt Flag Status and Clear (INTFLAG) register

Optional write-protection by the Peripheral Access Controller (PAC) is denoted by the "PAC Write-Protection" property in each individual register description.

Downloaded from Arrow.com.

PAC write-protection does not apply to accesses through an external debugger.

Related Links

11.6 Peripheral Access Controller (PAC)

33.5.9 Analog Connections

I/O-pins AIN0 to AIN19 as well as the VREFA/VREFB reference voltage pin are analog inputs to the ADC.

33.5.10 Calibration

The BIAS and LINEARITY calibration values from the production test must be loaded from the NVM Software Calibration Area into the ADC Calibration register (CALIB) by software to achieve specified accuracy.

Related Links

10.3.2 NVM Software Calibration Area Mapping

33.6 Functional Description

33.6.1 Principle of Operation

By default, the ADC provides results with 12-bit resolution. 8-bit or 10-bit results can be selected in order to reduce the conversion time.

The ADC has an oversampling with decimation option that can extend the resolution to 16 bits. The input values can be either internal (e.g., internal temperature sensor) or external (connected I/O pins). The user can also configure whether the conversion should be single-ended or differential.

33.6.2 Basic Operation

33.6.2.1 Initialization

Before enabling the ADC, the asynchronous clock source must be selected and enabled, and the ADC reference must be configured. The first conversion after the reference is changed must not be used. All other configuration registers must be stable during the conversion. The source for GCLK_ADC is selected and enabled in the System Controller (SYSCTRL). Refer to *SYSCTRL – System Controller* for more details.

When GCLK_ADC is enabled, the ADC can be enabled by writing a one to the Enable bit in the Control Register A (CTRLA.ENABLE).

Related Links

17. SYSCTRL – System Controller

33.6.2.2 Enabling, Disabling and Reset

The ADC is enabled by writing a '1' to the Enable bit in the Control A register (CTRLA.ENABLE). The ADC is disabled by writing CTRLA.ENABLE=0. The ADC is reset by writing a '1' to the Software Reset bit in the Control A register (CTRLA.SWRST). All registers in the ADC, except DBGCTRL, will be reset to their initial state, and the ADC will be disabled.

The ADC must be disabled before it is reset.

33.6.2.3 Operation

In the most basic configuration, the ADC samples values from the configured internal or external sources (INPUTCTRL register). The rate of the conversion depends on the combination of the GCLK_ADCx frequency and the clock prescaler.

To convert analog values to digital values, the ADC needs to be initialized first, as described in 33.6.2.1 Initialization. Data conversion can be started either manually by setting the Start bit in the Software Trigger register (SWTRIG.START=1), or automatically by configuring an automatic trigger to initiate the conversions. A free-running mode can be used to continuously convert an input channel. When using free-running mode the first conversion must be started, while subsequent conversions will start automatically at the end of previous conversions.

The automatic trigger can be configured to trigger on many different conditions.

Downloaded from Arrow.com.

The result of the conversion is stored in the Result register (RESULT) overwriting the result from the previous conversion.

To avoid data loss if more than one channel is enabled, the conversion result must be read as soon as it is available (INTFLAG.RESRDY). Failing to do so will result in an overrun error condition, indicated by the OVERRUN bit in the Interrupt Flag Status and Clear register (INTFLAG.OVERRUN). When the RESRDY interrupt flag is set, the new result has been synchronized to the RESULT register.

To enable one of the available interrupts sources, the corresponding bit in the Interrupt Enable Set register (INTENSET) must be written to '1'.

33.6.3 Prescaler

The ADC is clocked by GCLK_ADC. There is also a prescaler in the ADC to enable conversion at lower clock rates. Refer to CTRLB for additional information on prescaler settings.

Figure 33-2. ADC Prescaler

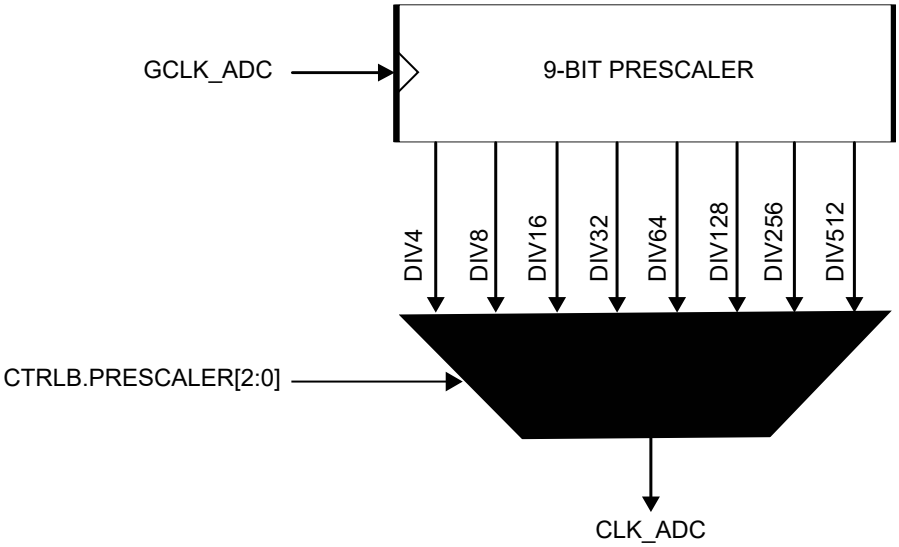

The propagation delay of an ADC measurement depends on the selected mode and is given as follows:

- Single-shot mode:

$$\text{PropagationDelay} = \frac{1 + \frac{\text{Resolution}}{2} + \text{DelayGain}}{f_{\text{CLK_ADC}}}$$

- Free-running mode:

$$\text{PropagationDelay} = \frac{\frac{\text{Resolution}}{2} + \text{DelayGain}}{f_{\text{CLK_ADC}}}$$

Table 33-1. Delay Gain

		Delay Gain (in CLK_ADC Period)			
	INTPUTCTRL.GAIN[3:0]	Free-running mode		Single-shot mode	
Name		Differential mode	Single-Ended mode	Differential mode	Single-Ended mode
1X	0x0	0	0	0	1
2X	0x1	0	1	0.5	1.5
4X	0x2	1	1	1	2
8X	0x3	1	2	1.5	2.5
16X	0x4	2	2	2	3

Downloaded from Arrow.com.

.....continued

		Delay Gain (in CLK_ADC Period)			
	INTPUTCTRL.GAIN[3:0]	Free-running mode		Single-shot mode	
Name		Differential mode	Single-Ended mode	Differential mode	Single-Ended mode
Reserved	0x5 ... 0xE	Reserved	Reserved	Reserved	Reserved
DIV2	0xF	0	1	0.5	1.5

33.6.4 ADC Resolution

The ADC supports 8-bit, 10-bit or 12-bit resolution. Resolution can be changed by writing the Resolution bit group in the Control B register (CTRLB.RESSEL). By default, the ADC resolution is set to 12 bits.

33.6.5 Differential and Single-Ended Conversions

The ADC has two conversion options: differential and single-ended:

- If the positive input may go below the negative input, the **differential** mode should be used in order to get correct results.
- If the positive input is always positive, the **single-ended** conversion should be used in order to have full 12-bit resolution in the conversion.

The negative input must be connected to ground. This ground could be the internal GND, IOGND or an external ground connected to a pin. Refer to the Control B (CTRLB) register for selection details.

If the positive input may go below the negative input, creating some negative results, the differential mode should be used in order to get correct results. The differential mode is enabled by setting DIFFMODE bit in the Control B register (CTRLB.DIFFMODE). Both conversion types could be run in single mode or in free-running mode. When the free-running mode is selected, an ADC input will continuously sample the input and performs a new conversion. The INTFLAG.RESRDY bit will be set at the end of each conversion.

Related Links

33.8.5 CTRLB

33.6.5.1 Conversion Timing

The following figure shows the ADC timing for one single conversion. A conversion starts after the software or event start are synchronized with the GCLK_ADC clock. The input channel is sampled in the first half CLK_ADC period.

Figure 33-3. ADC Timing for One Conversion in Differential Mode without Gain

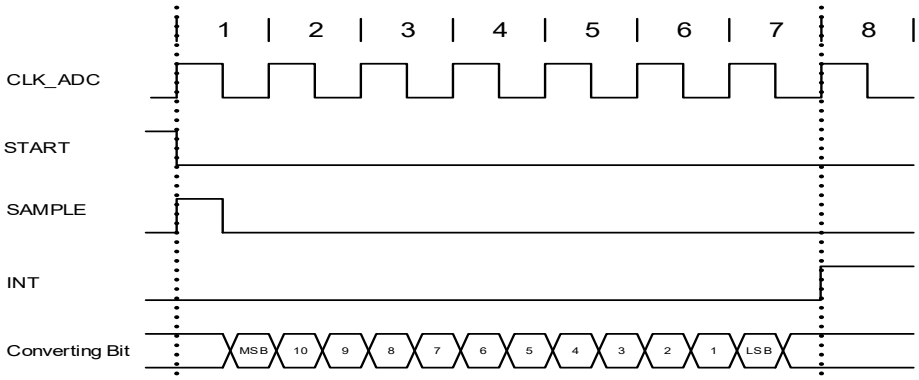

The sampling time can be increased by using the Sampling Time Length bit group in the Sampling Time Control register (SAMPCTRL.SAMPLEN). As example, the next figure is showing the timing conversion.

Downloaded from Arrow.com.

Figure 33-4. ADC Timing for One Conversion in Differential Mode without Gain, but with Increased Sampling Time

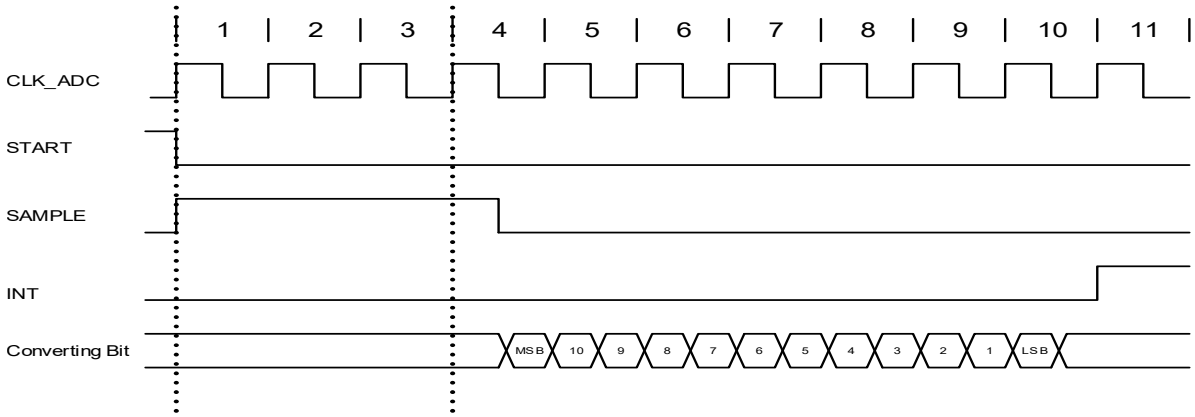

Figure 33-5. ADC Timing for Free Running in Differential Mode without Gain

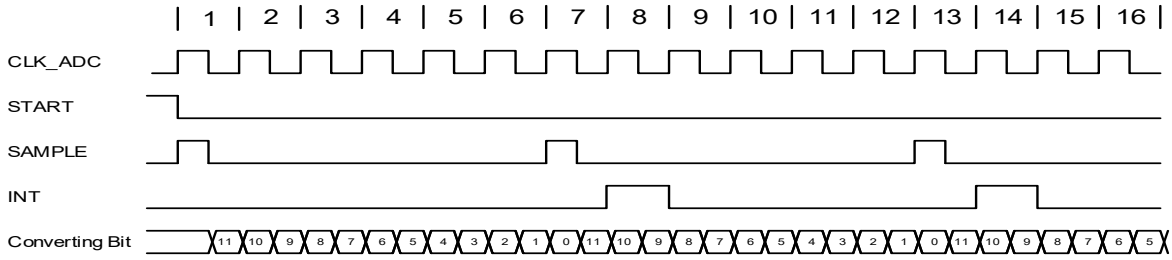

Figure 33-6. ADC Timing for One Conversion in Single-Ended Mode without Gain

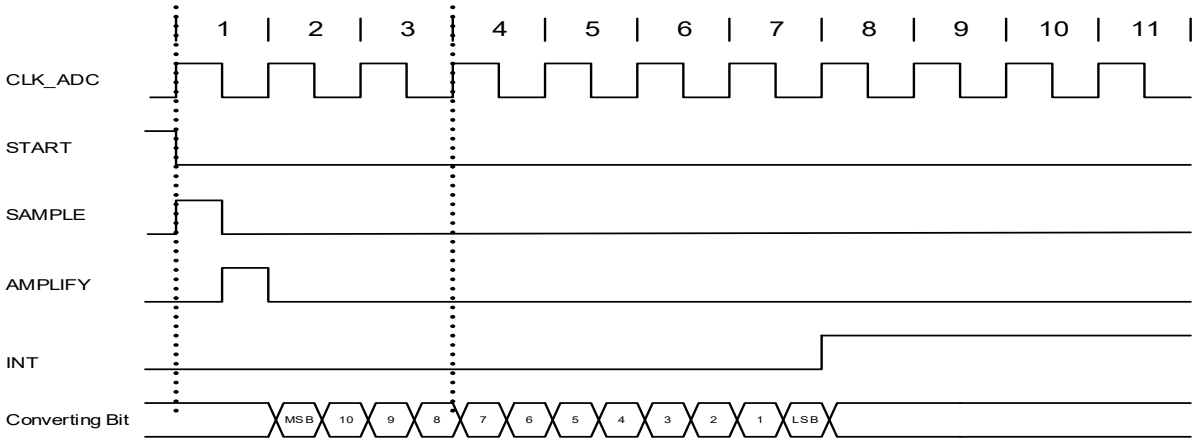

Figure 33-7. ADC Timing for Free Running in Single-Ended Mode without Gain

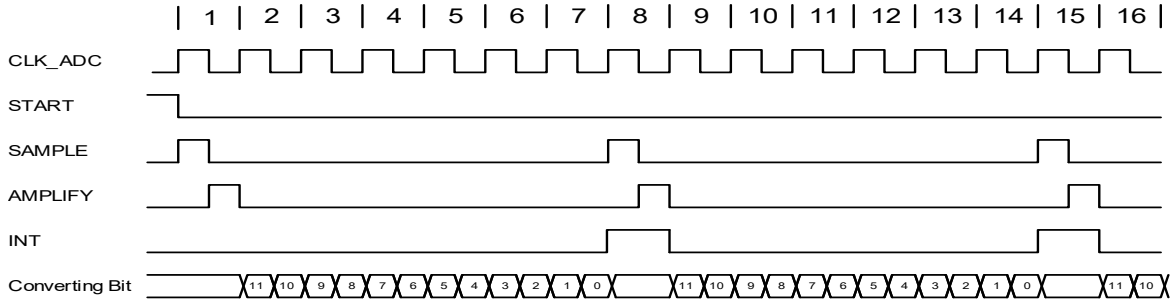

Downloaded from Arrow.com.

33.6.6 Accumulation

The result from multiple consecutive conversions can be accumulated. The number of samples to be accumulated is specified by the Number of Samples to be Collected field in the Average Control register (AVGCTRL.SAMPLENUM). When accumulating more than 16 samples, the result will be too large to match the 16-bit RESULT register size. To avoid overflow, the result is right shifted automatically to fit within the available register size. The number of automatic right shifts is specified in the table below.

Note: To perform the accumulation of two or more samples, the Conversion Result Resolution field in the Control B register (CTRLB.RESSEL) must be set.

Table 33-2. Accumulation

Number of Accumulated Samples	AVGCTRL. SAMPLENUM	Intermediate Result Precision	Number of Automatic Right Shifts	Final Result Precision	Automatic Division Factor
1	0x0	12 bits	0	12 bits	0
2	0x1	13 bits	0	13 bits	0
4	0x2	14 bits	0	14 bits	0
8	0x3	15 bits	0	15 bits	0
16	0x4	16 bits	0	16 bits	0
32	0x5	17 bits	1	16 bits	2
64	0x6	18 bits	2	16 bits	4
128	0x7	19 bits	3	16 bits	8
256	0x8	20 bits	4	16 bits	16
512	0x9	21 bits	5	16 bits	32
1024	0xA	22 bits	6	16 bits	64
Reserved	0xB - 0xF	12 bits		12 bits	0

33.6.7 Averaging

Averaging is a feature that increases the sample accuracy, at the cost of a reduced sampling rate. This feature is suitable when operating in noisy conditions.

Averaging is done by accumulating m samples, as described in 33.6.6 Accumulation, and dividing the result by m. The averaged result is available in the RESULT register. The number of samples to be accumulated is specified by writing to AVGCTRL.SAMPLENUM.

The division is obtained by a combination of the automatic right shift described above, and an additional right shift that must be specified by writing to the Adjusting Result/Division Coefficient field in AVGCTRL (AVGCTRL.ADJRES).

Note: To perform the averaging of two or more samples, the Conversion Result Resolution field in the Control B register (CTRLB.RESSEL) must be set to '1'.

Averaging AVGCTRL.SAMPLENUM samples will reduce the un-averaged sampling rate by a factor $\frac{1}{\text{AVGCTRL.SAMPLENUM}}$.

When the averaged result is available, the INTFLAG.RESRDY bit will be set.

Table 33-3. Averaging

Number of Accumulated Samples	AVGCTRL. SAMPLENUM	Intermediate Result Precision	Number of Automatic Right Shifts	Division Factor	AVGCTRL.ADJRES	Total Number of Right Shifts	Final Result Precision	Automatic Division Factor
1	0x0	12 bits	0	1	0x0		12 bits	0

Downloaded from Arrow.com.

.....continued

Number of Accumulated Samples	AVGCTRL.SAMPLENUM	Intermediate Result Precision	Number of Automatic Right Shifts	Division Factor	AVGCTRL.ADJRES	Total Number of Right Shifts	Final Result Precision	Automatic Division Factor
2	0x1	13	0	2	0x1	1	12 bits	0
4	0x2	14	0	4	0x2	2	12 bits	0
8	0x3	15	0	8	0x3	3	12 bits	0
16	0x4	16	0	16	0x4	4	12 bits	0
32	0x5	17	1	16	0x4	5	12 bits	2
64	0x6	18	2	16	0x4	6	12 bits	4
128	0x7	19	3	16	0x4	7	12 bits	8
256	0x8	20	4	16	0x4	8	12 bits	16
512	0x9	21	5	16	0x4	9	12 bits	32
1024	0xA	22	6	16	0x4	10	12 bits	64
Reserved	0xB-0xF				0x0		12 bits	0

33.6.8 Oversampling and Decimation

By using oversampling and decimation, the ADC resolution can be increased from 12 bits up to 16 bits, for the cost of reduced effective sampling rate.

To increase the resolution by n bits, 4^n samples must be accumulated. The result must then be right-shifted by n bits. This right-shift is a combination of the automatic right-shift and the value written to AVGCTRL.ADJRES. To obtain the correct resolution, the ADJRES must be configured as described in the table below. This method will result in n bit extra LSB resolution.

Table 33-4. Configuration Required for Oversampling and Decimation

Result Resolution	Number of Samples to Average	AVGCTRL.SAMPLENUM[3:0]	Number of Automatic Right Shifts	AVGCTRL.ADJRES[2:0]
13 bits	$4^1 = 4$	0x2	0	0x1
14 bits	$4^2 = 16$	0x4	0	0x2
15 bits	$4^3 = 64$	0x6	2	0x1
16 bits	$4^4 = 256$	0x8	4	0x0

33.6.9 Window Monitor

The window monitor feature allows the conversion result in the RESULT register to be compared to predefined threshold values. The window mode is selected by setting the Window Monitor Mode bits in the Window Monitor Control register (WINCTRL.WINMODE[2:0]). Threshold values must be written in the Window Monitor Lower Threshold register (WINLT) and Window Monitor Upper Threshold register (WINUT).

If differential input is selected, the WINLT and WINUT are evaluated as signed values. Otherwise they are evaluated as unsigned values. The significant WINLT and WINUT bits are given by the precision selected in the Conversion Result Resolution bit group in the Control B register (CTRLB.RESSEL). This means that e.g. in 8-bit mode, only the eight lower bits will be considered. In addition, in differential mode, the eighth bit will be considered as the sign bit, even if the ninth bit is zero.

The INTFLAG.WINMON interrupt flag will be set if the conversion result matches the window monitor condition.

33.6.10 Offset and Gain Correction

Inherent gain and offset errors affect the absolute accuracy of the ADC.

Downloaded from Arrow.com.

The offset error is defined as the deviation of the actual ADC transfer function from an ideal straight line at zero input voltage. The offset error cancellation is handled by the Offset Correction register (OFFSETCORR). The offset correction value is subtracted from the converted data before writing to the Result register (RESULT).

The gain error is defined as the deviation of the last output step's midpoint from the ideal straight line, after compensating for offset error. The gain error cancellation is handled by the Gain Correction register (GAINCORR).

To correct these two errors, the Digital Correction Logic Enabled bit in the Control B register (CTRLB.CORREN) must be set.

Offset and gain error compensation results are both calculated according to:

$$\text{Result} = (\text{Conversion value} + - \text{OFFSETCORR}) \cdot \text{GAINCORR}$$

The correction will introduce a latency of 13 CLK_ADC clock cycles. In Free-running mode this latency is introduced on the first conversion only because the duration is always less than the propagation delay. In Single Conversion mode this latency is introduced for each conversion.

Figure 33-8. ADC Timing Correction Enabled

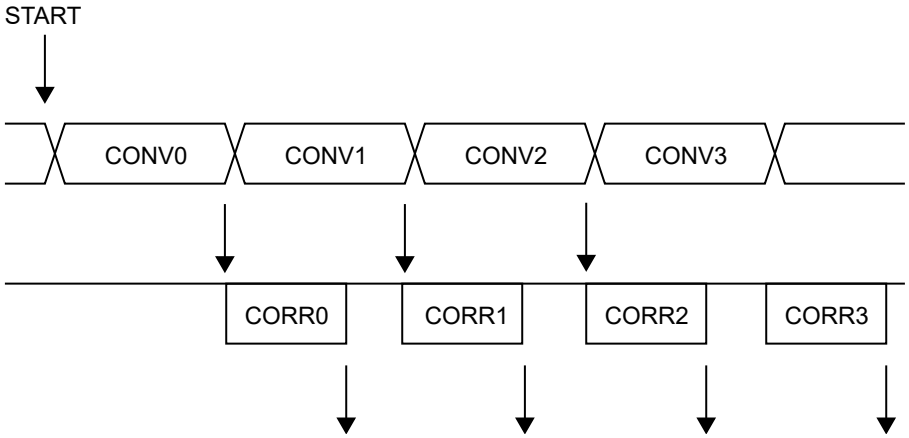

33.6.11 DMA Operation

The ADC generates the following DMA request:

- Result Conversion Ready (RESRDY): the request is set when a conversion result is available and cleared when the RESULT register is read. When the averaging operation is enabled, the DMA request is set when the averaging is completed and result is available.

33.6.12 Interrupts

The ADC has the following interrupt sources:

- Result Conversion Ready: RESRDY
- Window Monitor: WINMON
- Overrun: OVERRUN

Each interrupt source has an interrupt flag associated with it. The interrupt flag in the Interrupt Flag Status and Clear (INTFLAG) register is set when the interrupt condition occurs. Each interrupt can be individually enabled by writing a one to the corresponding bit in the Interrupt Enable Set (INTENSET) register, and disabled by writing a one to the corresponding bit in the Interrupt Enable Clear (INTENCLR) register. An interrupt request is generated when the interrupt flag is set and the corresponding interrupt is enabled. The interrupt request remains active until the interrupt flag is cleared, the interrupt is disabled, or the ADC is reset. An interrupt flag is cleared by writing a one to the corresponding bit in the INTFLAG register. Each peripheral can have one interrupt request line per interrupt source or one common interrupt request line for all the interrupt sources. This is device dependent.

Refer to *Nested Vector Interrupt Controller* for details. The user must read the INTFLAG register to determine which interrupt condition is present.

Related Links

11.2 Nested Vector Interrupt Controller

Downloaded from Arrow.com.

33.6.13 Events

The ADC can generate the following output events:

- Result Ready (RESRDY): Generated when the conversion is complete and the result is available.
- Window Monitor (WINMON): Generated when the window monitor condition match.

Setting an Event Output bit in the Event Control Register (EVCTRL.xxEO=1) enables the corresponding output event. Clearing this bit disables the corresponding output event. Refer to the *Event System* chapter for details on configuring the event system.

The peripheral can take the following actions on an input event:

- Start conversion (START): Start a conversion.
- Conversion flush (FLUSH): Flush the conversion.

Setting an Event Input bit in the Event Control register (EVCTRL.xxEI=1) enables the corresponding action on input event. Clearing this bit disables the corresponding action on input event.

Note: If several events are connected to the ADC, the enabled action will be taken on any of the incoming events. The events must be correctly routed in the Event System.

Related Links

24. EVSYS – Event System

33.6.14 Sleep Mode Operation

The Run in Standby bit in the Control A register (CTRLA.RUNSTDBY) controls the behavior of the ADC during standby sleep mode. When CTRLA.RUNSTDBY=0, the ADC is disabled during sleep, but maintains its current configuration. When CTRLA.RUNSTDBY=1, the ADC continues to operate during sleep. Note that when CTRLA.RUNSTDBY=0, the analog blocks are powered off for the lowest power consumption. This necessitates a start-up time delay when the system returns from sleep.

When CTRLA.RUNSTDBY=1, any enabled ADC interrupt source can wake up the CPU, except the OVERRUN interrupt.. While the CPU is sleeping, ADC conversion can only be triggered by events.

33.6.15 Synchronization

Due to asynchronicity between the main clock domain and the peripheral clock domains, some registers need to be synchronized when written or read.

When executing an operation that requires synchronization, the Synchronization Busy bit in the Status register (STATUS.SYNCBUSY) will be set immediately, and cleared when synchronization is complete. The Synchronization Ready interrupt can be used to signal when synchronization is complete.

If an operation that requires synchronization is executed while STATUS.SYNCBUSY=1, the bus will be stalled. All operations will complete successfully, but the CPU will be stalled and interrupts will be pending as long as the bus is stalled.

The following bits are synchronized when written:

- Software Reset bit in the Control A register (CTRLA.SWRST)
- Enable bit in the Control A register (CTRLA.ENABLE)

The following registers are synchronized when written:

- Control B (CTRLB)
- Software Trigger (SWTRIG)
- Window Monitor Control (WINCTRL)
- Input Control (INPUTCTRL)
- Window Upper/Lower Threshold (WINUT/WINLT)

Required write-synchronization is denoted by the "Write-Synchronized" property in the register description.

The following registers are synchronized when read:

- Software Trigger (SWTRIG)
- Input Control (INPUTCTRL)

Downloaded from Arrow.com.

Required read-synchronization is denoted by the "Read-Synchronized" property in the register description.

Related Links

14.3 Register Synchronization

© 2021 Microchip Technology Inc.
and its subsidiaries

Downloaded from Arrow.com.

33.7 Register Summary

Offset	Name	Bit Pos.	7	6	5	4	3	2	1	0
0x00	CTRLA	7:0						RUNSTDBY	ENABLE	SWRST
0x01	REFCTRL	7:0	REFCOMP				REFSEL[3:0]			
0x02	AVGCTRL	7:0		ADJRES[2:0]			SAMPLENUM[3:0]			
0x03	SAMPCTRL	7:0			SAMPLEN[5:0]					
0x04	CTRLB	7:0			RESSEL[1:0]		CORREN	FREERUN	LEFTADJ	DIFFMODE
		15:8						PRESCALER[2:0]		
0x06 ... 0x07	Reserved									
0x08	WINCTRL	7:0						WINMODE[2:0]		
0x09 ... 0x0B	Reserved									
0x0C	SWTRIG	7:0							START	FLUSH
0x0D ... 0x0F	Reserved									
0x10	INPUTCTRL	7:0				MUXPOS[4:0]				
		15:8				MUXNEG[4:0]				
		23:16	INPUTOFFSET[3:0]				INPUTSCAN[3:0]			
		31:24					GAIN[3:0]			
0x14	EVCTRL	7:0			WINMONEO	RESRDYEO			SYNCEI	STARTEI
0x15	Reserved									
0x16	INTENCLR	7:0					SYNCRDY	WINMON	OVERRUN	RESRDY
0x17	INTENSET	7:0					SYNCRDY	WINMON	OVERRUN	RESRDY
0x18	INTFLAG	7:0					SYNCRDY	WINMON	OVERRUN	RESRDY
0x19	STATUS	7:0	SYNCBUSY							
0x1A	RESULT	7:0	RESULT[7:0]							
		15:8	RESULT[15:8]							
0x1C	WINLT	7:0	WINLT[7:0]							
		15:8	WINLT[15:8]							
0x1E ... 0x1F	Reserved									
0x20	WINUT	7:0	WINUT[7:0]							
		15:8	WINUT[15:8]							
0x22 ... 0x23	Reserved									
0x24	GAINCORR	7:0	GAINCORR[7:0]							
		15:8					GAINCORR[11:8]			
0x26	OFFSETCORR	7:0	OFFSETCORR[7:0]							
		15:8					OFFSETCORR[11:8]			
0x28	CALIB	7:0	LINEARITY_CAL[7:0]							
		15:8						BIAS_CAL[2:0]		
0x2A	DBGCTRL	7:0								DBGRUN

33.8 Register Description

Registers can be 8, 16 or 32 bits wide. Atomic 8-, 16- and 32-bit accesses are supported. In addition, the 8-bit quarters and 16-bit halves of a 32-bit register and the 8-bit halves of a 16-bit register can be accessed directly.

Some registers are optionally write-protected by the Peripheral Access Controller (PAC). Write-protection is denoted by the Write-Protected property in each individual register description.

Downloaded from Arrow.com.

Some registers require synchronization when read and/or written. Synchronization is denoted by the Write-Synchronized or the Read-Synchronized property in each individual register description.

Some registers are enable-protected, meaning they can be written only when the ADC is disabled. Enable-protection is denoted by the Enable-Protected property in each individual register description.

© 2021 Microchip Technology Inc.
and its subsidiaries

Downloaded from Arrow.com.

33.8.1 Control A

Name: CTRLA
Offset: 0x00
Reset: 0x00
Property: Write-Protected

Bit	7	6	5	4	3	2	1	0
						RUNSTDBY	ENABLE	SWRST
Access						R/W	R/W	R/W
Reset						0	0	0

Bit 2 – RUNSTDBY Run in Standby
This bit indicates whether the ADC will continue running in standby sleep mode or not:

Value	Description
0	The ADC is halted during standby sleep mode.
1	The ADC continues normal operation during standby sleep mode.

Bit 1 – ENABLE Enable
Due to synchronization, there is a delay from writing CTRLA.ENABLE until the peripheral is enabled/disabled. The value written to CTRL.ENABLE will read back immediately and the Synchronization Busy bit in the Status register (STATUS.SYNCBUSY) will be set. STATUS.SYNCBUSY will be cleared when the operation is complete.

Value	Description
0	The ADC is disabled.
1	The ADC is enabled.

Bit 0 – SWRST Software Reset
Writing a zero to this bit has no effect.
Writing a one to this bit resets all registers in the ADC, except DBGCTRL, to their initial state, and the ADC will be disabled.
Writing a one to CTRL.SWRST will always take precedence, meaning that all other writes in the same write-operation will be discarded.
Due to synchronization, there is a delay from writing CTRLA.SWRST until the reset is complete. CTRLA.SWRST and STATUS.SYNCBUSY will both be cleared when the reset is complete.

Value	Description
0	There is no reset operation ongoing.
1	The reset operation is ongoing.

Downloaded from Arrow.com.

33.8.2 Reference Control

Name: REFCTRL
Offset: 0x01
Reset: 0x00
Property: Write-Protected

Bit	7	6	5	4	3	2	1	0
	REFCOMP				REFSEL[3:0]			
Access	R/W				R/W	R/W	R/W	R/W
Reset	0				0	0	0	0

Bit 7 – REFCOMP Reference Buffer Offset Compensation Enable
The accuracy of the gain stage can be increased by enabling the reference buffer offset compensation. This will decrease the input impedance and thus increase the start-up time of the reference.

Value	Description
0	Reference buffer offset compensation is disabled.
1	Reference buffer offset compensation is enabled.

Bits 3:0 – REFSEL[3:0] Reference Selection
These bits select the reference for the ADC.

Table 33-5. Reference Selection

REFSEL[3:0]	Name	Description
0x0	INT1V	1.0V voltage reference
0x1	INTVCC0	1/1.48 VDDANA
0x2	INTVCC1	1/2 VDDANA (only for VDDANA > 2.0V)
0x3	VREFA	External reference
0x4	VREFB	External reference
0x5-0xF		Reserved

Note: INT1V is the buffered internal reference of 1.0V, derived from the internal 1.1V bandgap reference.

Downloaded from Arrow.com.

33.8.3 Average Control

Name: AVGCTRL
Offset: 0x02
Reset: 0x00
Property: Write-Protected

Bit	7	6	5	4	3	2	1	0
		ADJRES[2:0]			SAMPLENUM[3:0]			
Access		R/W	R/W	R/W	R/W	R/W	R/W	R/W
Reset		0	0	0	0	0	0	0

Bits 6:4 – ADJRES[2:0] Adjusting Result / Division Coefficient
These bits define the division coefficient in 2n steps.

Bits 3:0 – SAMPLENUM[3:0] Number of Samples to be Collected
These bits define how many samples should be added together.The result will be available in the Result register (RESULT). Note: if the result width increases, CTRLB.RESSEL must be changed.

SAMPLENUM[3:0]	Name	Description
0x0	1	1 sample
0x1	2	2 samples
0x2	4	4 samples
0x3	8	8 samples
0x4	16	16 samples
0x5	32	32 samples
0x6	64	64 samples
0x7	128	128 samples
0x8	256	256 samples
0x9	512	512 samples
0xA	1024	1024 samples
0xB-0xF		Reserved

Downloaded from Arrow.com.

33.8.4 Sampling Time Control

Name: SAMPCTRL
Offset: 0x03
Reset: 0x00
Property: Write-Protected

Bit	7	6	5	4	3	2	1	0
			SAMPLEN[5:0]					
Access			R/W	R/W	R/W	R/W	R/W	R/W
Reset			0	0	0	0	0	0

Bits 5:0 – SAMPLEN[5:0] Sampling Time Length
These bits control the ADC sampling time in number of half CLK_ADC cycles, depending of the prescaler value, thus controlling the ADC input impedance. Sampling time is set according to the equation:

$$\text{Sampling time} = (\text{SAMPLEN}+1) \cdot \left(\frac{\text{CLK}_{\text{ADC}}}{2}\right)$$

Downloaded from Arrow.com.

33.8.5 Control B

Name: CTRLB
Offset: 0x04
Reset: 0x0000
Property: Write-Protected, Write-Synchronized

Bit	15	14	13	12	11	10	9	8
						PRESCALER[2:0]		
Access						R/W	R/W	R/W
Reset						0	0	0

Bit	7	6	5	4	3	2	1	0
			RESSEL[1:0]		CORREN	FREERUN	LEFTADJ	DIFFMODE
Access			R/W	R/W	R/W	R/W	R/W	R/W
Reset			0	0	0	0	0	0

Bits 10:8 – PRESCALER[2:0] Prescaler Configuration
These bits define the ADC clock relative to the peripheral clock.

PRESCALER[2:0]	Name	Description
0x0	DIV4	Peripheral clock divided by 4
0x1	DIV8	Peripheral clock divided by 8
0x2	DIV16	Peripheral clock divided by 16
0x3	DIV32	Peripheral clock divided by 32
0x4	DIV64	Peripheral clock divided by 64
0x5	DIV128	Peripheral clock divided by 128
0x6	DIV256	Peripheral clock divided by 256
0x7	DIV512	Peripheral clock divided by 512

Bits 5:4 – RESSEL[1:0] Conversion Result Resolution
These bits define whether the ADC completes the conversion at 12-, 10- or 8-bit result resolution.

RESSEL[1:0]	Name	Description
0x0	12BIT	12-bit result
0x1	16BIT	For averaging mode output
0x2	10BIT	10-bit result
0x3	8BIT	8-bit result

Bit 3 – CORREN Digital Correction Logic Enabled

Value	Description
0	Disable the digital result correction.
1	Enable the digital result correction. The ADC conversion result in the RESULT register is then corrected for gain and offset based on the values in the GAINCAL and OFFSETCAL registers. Conversion time will be increased by X cycles according to the value in the Offset Correction Value bit group in the Offset Correction register.

Bit 2 – FREERUN Free Running Mode

Value	Description
0	The ADC run is single conversion mode.
1	The ADC is in free running mode and a new conversion will be initiated when a previous conversion completes.

Bit 1 – LEFTADJ Left-Adjusted Result

Value	Description
0	The ADC conversion result is right-adjusted in the RESULT register.

Downloaded from Arrow.com.

Value	Description
1	The ADC conversion result is left-adjusted in the RESULT register. The high byte of the 12-bit result will be present in the upper part of the result register. Writing this bit to zero (default) will right-adjust the value in the RESULT register.

Bit 0 – DIFFMODE Differential Mode

Value	Description
0	The ADC is running in singled-ended mode.
1	The ADC is running in differential mode. In this mode, the voltage difference between the MUXPOS and MUXNEG inputs will be converted by the ADC.

Downloaded from Arrow.com.

33.8.6 Window Monitor Control

Name: WINCTRL
Offset: 0x08
Reset: 0x00
Property: Write-Protected, Write-Synchronized

Bit	7	6	5	4	3	2	1	0
						WINMODE[2:0]		
Access						R/W	R/W	R/W
Reset						0	0	0

Bits 2:0 – WINMODE[2:0] Window Monitor Mode
These bits enable and define the window monitor mode.

WINMODE[2:0]	Name	Description
0x0	DISABLE	No window mode (default)
0x1	MODE1	Mode 1: RESULT > WINLT
0x2	MODE2	Mode 2: RESULT < WINUT
0x3	MODE3	Mode 3: WINLT < RESULT < WINUT
0x4	MODE4	Mode 4: !(WINLT < RESULT < WINUT)
0x5-0x7		Reserved

Downloaded from Arrow.com.

33.8.7 Software Trigger

Name: SWTRIG
Offset: 0x0C
Reset: 0x00
Property: Write-Protected, Write-Synchronized

Bit	7	6	5	4	3	2	1	0
							START	FLUSH
Access							R/W	R/W
Reset							0	0

Bit 1 – START ADC Start Conversion
Writing this bit to zero will have no effect.

Value	Description
0	The ADC will not start a conversion.
1	The ADC will start a conversion. The bit is cleared by hardware when the conversion has started. Setting this bit when it is already set has no effect.

Bit 0 – FLUSH ADC Conversion Flush
After the flush, the ADC will resume where it left off; i.e., if a conversion was pending, the ADC will start a new conversion.
Writing this bit to zero will have no effect.

Value	Description
0	No flush action.
1	"Writing a '1' to this bit will flush the ADC pipeline. A flush will restart the ADC clock on the next peripheral clock edge, and all conversions in progress will be aborted and lost. This bit will be cleared after the ADC has been flushed. After the flush, the ADC will resume where it left off; i.e., if a conversion was pending, the ADC will start a new conversion.

Downloaded from Arrow.com.

33.8.8 Input Control

Name: INPUTCTRL
Offset: 0x10
Reset: 0x00000000
Property: Write-Protected, Write-Synchronized

Bit	31	30	29	28	27	26	25	24
					GAIN[3:0]			
Access					R/W	R/W	R/W	R/W
Reset					0	0	0	0

Bit	23	22	21	20	19	18	17	16
	INPUTOFFSET[3:0]				INPUTSCAN[3:0]			
Access	R/W	R/W	R/W	R/W	R/W	R/W	R/W	R/W
Reset	0	0	0	0	0	0	0	0

Bit	15	14	13	12	11	10	9	8
				MUXNEG[4:0]				
Access				R/W	R/W	R/W	R/W	R/W
Reset				0	0	0	0	0

Bit	7	6	5	4	3	2	1	0
				MUXPOS[4:0]				
Access				R/W	R/W	R/W	R/W	R/W
Reset				0	0	0	0	0

Bits 27:24 – GAIN[3:0] Gain Factor Selection
These bits set the gain factor of the ADC gain stage.

GAIN[3:0]	Name	Description
0x0	1X	1x
0x1	2X	2x
0x2	4X	4x
0x3	8X	8x
0x4	16X	16x
0x5-0xE	-	Reserved
0xF	DIV2	1/2x

Bits 23:20 – INPUTOFFSET[3:0] Positive Mux Setting Offset
The pin scan is enabled when INPUTSCAN != 0. Writing these bits to a value other than zero causes the first conversion triggered to be converted using a positive input equal to MUXPOS + INPUTOFFSET. Setting this register to zero causes the first conversion to use a positive input equal to MUXPOS.
After a conversion, the INPUTOFFSET register will be incremented by one, causing the next conversion to be done with the positive input equal to MUXPOS + INPUTOFFSET. The sum of MUXPOS and INPUTOFFSET gives the input that is actually converted.

Bits 19:16 – INPUTSCAN[3:0] Number of Input Channels Included in Scan
This register gives the number of input sources included in the pin scan. The number of input sources included is INPUTSCAN + 1. The input channels included are in the range from MUXPOS + INPUTOFFSET to MUXPOS + INPUTOFFSET + INPUTSCAN.
The range of the scan mode must not exceed the number of input channels available on the device.

Bits 12:8 – MUXNEG[4:0] Negative Mux Input Selection
These bits define the Mux selection for the negative ADC input. selections.

Downloaded from Arrow.com.

Value	Name	Description
0x00	PIN0	ADC AIN0 pin
0x01	PIN1	ADC AIN1 pin
0x02	PIN2	ADC AIN2 pin
0x03	PIN3	ADC AIN3 pin
0x04	PIN4	ADC AIN4 pin
0x05	PIN5	ADC AIN5 pin
0x06	PIN6	ADC AIN6 pin
0x07	PIN7	ADC AIN7 pin
0x08-0x17		Reserved
0x18	GND	Internal ground
0x19	IOGND	I/O ground
0x1A-0x1F		Reserved Note: 1. Only available in SAM R21G.

Bits 4:0 – MUXPOS[4:0] Positive Mux Input Selection
These bits define the Mux selection for the positive ADC input. The following table shows the possible input selections. If the internal bandgap voltage channel is selected, then the Sampling Time Length bit group in the Sampling Control register must be written.

MUXPOS[4:0]	Group configuration	Description
0x00	PIN0	ADC AIN0 pin
0x01	PIN1	ADC AIN1 pin
0x02	PIN2	ADC AIN2 pin
0x03	PIN3	ADC AIN3 pin
0x04	PIN4	ADC AIN4 pin
0x05	PIN5	ADC AIN5 pin
0x06	PIN6	ADC AIN6 pin
0x07	PIN7	ADC AIN7 pin
0x08	PIN8	ADC AIN8 pin
0x09	PIN9	ADC AIN9 pin
0x0A	PIN10	ADC AIN10 pin
0x0B	PIN11	ADC AIN11 pin
0x0C	PIN12	ADC AIN12 pin
0x0D	PIN13	ADC AIN13 pin
0x0E	PIN14	ADC AIN14 pin
0x0F	PIN15	ADC AIN15 pin
0x10	PIN16	ADC AIN16 pin
0x11	PIN17	ADC AIN17 pin
0x12	PIN18	ADC AIN18 pin
0x13	PIN19	ADC AIN19 pin
0x14-0x17		Reserved
0x18	TEMP	Temperature reference
0x19	BANDGAP	Bandgap voltage
0x1A	SCALEDCOREVCC	1/4 scaled core supply
0x1B	SCALEDIOVCC	1/4 scaled I/O supply
0x1C	DAC	DAC output (1)
0x1D-0x1F		Reserved

Note:
1. When using the internal DAC connection to the positive input of the ADC, the DAC CTRLB.EOEN must be set.

Downloaded from Arrow.com.

33.8.9 Event Control

Name: EVCTRL
Offset: 0x14
Reset: 0x00
Property: Write-Protected

Bit	7	6	5	4	3	2	1	0
			WINMONEO	RESRDYEO			SYNCEI	STARTEI
Access			R/W	R/W			R/W	R/W
Reset			0	0			0	0

Bit 5 – WINMONEO Window Monitor Event Out
This bit indicates whether the Window Monitor event output is enabled or not and an output event will be generated when the window monitor detects something.

Value	Description
0	Window Monitor event output is disabled and an event will not be generated.
1	Window Monitor event output is enabled and an event will be generated.

Bit 4 – RESRDYEO Result Ready Event Out
This bit indicates whether the Result Ready event output is enabled or not and an output event will be generated when the conversion result is available.

Value	Description
0	Result Ready event output is disabled and an event will not be generated.
1	Result Ready event output is enabled and an event will be generated.

Bit 1 – SYNCEI Synchronization Event In

Value	Description
0	A flush and new conversion will not be triggered on any incoming event.
1	A flush and new conversion will be triggered on any incoming event.

Bit 0 – STARTEI Start Conversion Event In

Value	Description
0	A new conversion will not be triggered on any incoming event.
1	A new conversion will be triggered on any incoming event.

Downloaded from Arrow.com.

33.8.10 Interrupt Enable Clear

Name: INTENCLR
Offset: 0x16
Reset: 0x00
Property: Write-Protected

Bit	7	6	5	4	3	2	1	0
					SYNCRDY	WINMON	OVERRUN	RESRDY
Access					R/W	R/W	R/W	R/W
Reset					0	0	0	0

Bit 3 – SYNCRDY Synchronization Ready Interrupt Enable
Writing a zero to this bit has no effect.
Writing a one to this bit will clear the Synchronization Ready Interrupt Enable bit and the corresponding interrupt request.

Value	Description
0	The Synchronization Ready interrupt is disabled.
1	The Synchronization Ready interrupt is enabled, and an interrupt request will be generated when the Synchronization Ready interrupt flag is set.

Bit 2 – WINMON Window Monitor Interrupt Enable
Writing a zero to this bit has no effect.
Writing a one to this bit will clear the Window Monitor Interrupt Enable bit and the corresponding interrupt request.

Value	Description
0	The window monitor interrupt is disabled.
1	The window monitor interrupt is enabled, and an interrupt request will be generated when the Window Monitor interrupt flag is set.

Bit 1 – OVERRUN Overrun Interrupt Enable
Writing a zero to this bit has no effect.
Writing a one to this bit will clear the Overrun Interrupt Enable bit and the corresponding interrupt request.

Value	Description
0	The Overrun interrupt is disabled.
1	The Overrun interrupt is enabled, and an interrupt request will be generated when the Overrun interrupt flag is set.

Bit 0 – RESRDY Result Ready Interrupt Enable
Writing a zero to this bit has no effect.
Writing a one to this bit will clear the Result Ready Interrupt Enable bit and the corresponding interrupt request.

Value	Description
0	The Result Ready interrupt is disabled.
1	The Result Ready interrupt is enabled, and an interrupt request will be generated when the Result Ready interrupt flag is set.

Downloaded from Arrow.com.

33.8.11 Interrupt Enable Set

Name: INTENSET
Offset: 0x17
Reset: 0x00
Property: Write-Protected

Bit	7	6	5	4	3	2	1	0
					SYNCRDY	WINMON	OVERRUN	RESRDY
Access					R/W	R/W	R/W	R/W
Reset					0	0	0	0

Bit 3 – SYNCRDY Synchronization Ready Interrupt Enable
Writing a zero to this bit has no effect.
Writing a one to this bit will set the Synchronization Ready Interrupt Enable bit, which enables the Synchronization Ready interrupt.

Value	Description
0	The Synchronization Ready interrupt is disabled.
1	The Synchronization Ready interrupt is enabled.

Bit 2 – WINMON Window Monitor Interrupt Enable
Writing a zero to this bit has no effect.
Writing a one to this bit will set the Window Monitor Interrupt bit and enable the Window Monitor interrupt.

Value	Description
0	The Window Monitor interrupt is disabled.
1	The Window Monitor interrupt is enabled.

Bit 1 – OVERRUN Overrun Interrupt Enable
Writing a zero to this bit has no effect.
Writing a one to this bit will set the Overrun Interrupt bit and enable the Overrun interrupt.

Value	Description
0	The Overrun interrupt is disabled.
1	The Overrun interrupt is enabled.

Bit 0 – RESRDY Result Ready Interrupt Enable
Writing a zero to this bit has no effect.
Writing a one to this bit will set the Result Ready Interrupt bit and enable the Result Ready interrupt.

Value	Description
0	The Result Ready interrupt is disabled.
1	The Result Ready interrupt is enabled.

© 2021 Microchip Technology Inc. and its subsidiaries

Downloaded from Arrow.com.

33.8.12 Interrupt Flag Status and Clear

Name: INTFLAG
Offset: 0x18
Reset: 0x00
Property: -

Bit	7	6	5	4	3	2	1	0
					SYNCRDY	WINMON	OVERRUN	RESRDY
Access					R/W	R/W	R/W	R/W
Reset					0	0	0	0

Bit 3 – SYNCRDY Synchronization Ready
This flag is cleared by writing a one to the flag.
This flag is set on a one-to-zero transition of the Synchronization Busy bit in the Status register (STATUS.SYNCBUSY), except when caused by an enable or software reset, and will generate an interrupt request if INTENCLR/SET.SYNCRDY is one.
Writing a zero to this bit has no effect.
Writing a one to this bit clears the Synchronization Ready interrupt flag.

Bit 2 – WINMON Window Monitor
This flag is cleared by writing a one to the flag or by reading the RESULT register.
This flag is set on the next GCLK_ADC cycle after a match with the window monitor condition, and an interrupt request will be generated if INTENCLR/SET.WINMON is one.
Writing a zero to this bit has no effect.
Writing a one to this bit clears the Window Monitor interrupt flag.

Bit 1 – OVERRUN Overrun
This flag is cleared by writing a one to the flag.
This flag is set if RESULT is written before the previous value has been read by CPU, and an interrupt request will be generated if INTENCLR/SET.OVERRUN is one.
Writing a zero to this bit has no effect.
Writing a one to this bit clears the Overrun interrupt flag.

Bit 0 – RESRDY Result Ready
This flag is cleared by writing a one to the flag or by reading the RESULT register.
This flag is set when the conversion result is available, and an interrupt will be generated if INTENCLR/SET.RESRDY is one.
Writing a zero to this bit has no effect.
Writing a one to this bit clears the Result Ready interrupt flag.

Downloaded from Arrow.com.

33.8.13 Status

Name: STATUS
Offset: 0x19
Reset: 0x00
Property: -

Bit	7	6	5	4	3	2	1	0
	SYNCBUSY							
Access	R							
Reset	0							

Bit 7 – SYNCBUSY Synchronization Busy
This bit is cleared when the synchronization of registers between the clock domains is complete.
This bit is set when the synchronization of registers between clock domains is started.

Downloaded from Arrow.com.

33.8.14 Result

Name: RESULT
Offset: 0x1A
Reset: 0x0000
Property: Read-Synchronized

Bit	15	14	13	12	11	10	9	8
	RESULT[15:8]							
Access	R	R	R	R	R	R	R	R
Reset	0	0	0	0	0	0	0	0

Bit	7	6	5	4	3	2	1	0
	RESULT[7:0]							
Access	R	R	R	R	R	R	R	R
Reset	0	0	0	0	0	0	0	0

Bits 15:0 – RESULT[15:0] Result Conversion Value
These bits will hold up to a 16-bit ADC result, depending on the configuration.
In single conversion mode without averaging, the ADC conversion will produce a 12-bit result, which can be left- or right-shifted, depending on the setting of CTRLB.LEFTADJ.
If the result is left-adjusted (CTRLB.LEFTADJ), the high byte of the result will be in bit position [15:8], while the remaining 4 bits of the result will be placed in bit locations [7:4]. This can be used only if an 8-bit result is required; i.e., one can read only the high byte of the entire 16-bit register.
If the result is not left-adjusted (CTRLB.LEFTADJ) and no oversampling is used, the result will be available in bit locations [11:0], and the result is then 12 bits long.
If oversampling is used, the result will be located in bit locations [15:0], depending on the settings of the Average Control register (AVGCTRL).

Downloaded from Arrow.com.

33.8.15 Window Monitor Lower Threshold

Name: WINLT
Offset: 0x1C
Reset: 0x0000
Property: Write-Protected, Write-Synchronized

Bit	15	14	13	12	11	10	9	8
	WINLT[15:8]							
Access	R/W	R/W	R/W	R/W	R/W	R/W	R/W	R/W
Reset	0	0	0	0	0	0	0	0

Bit	7	6	5	4	3	2	1	0
	WINLT[7:0]							
Access	R/W	R/W	R/W	R/W	R/W	R/W	R/W	R/W
Reset	0	0	0	0	0	0	0	0

Bits 15:0 – WINLT[15:0] Window Lower Threshold
If the window monitor is enabled, these bits define the lower threshold value.

Downloaded from Arrow.com.

33.8.16 Window Monitor Upper Threshold

Name: WINUT
Offset: 0x20
Reset: 0x0000
Property: Write-Protected, Write-Synchronized

Bit	15	14	13	12	11	10	9	8
	WINUT[15:8]							
Access	R/W	R/W	R/W	R/W	R/W	R/W	R/W	R/W
Reset	0	0	0	0	0	0	0	0

Bit	7	6	5	4	3	2	1	0
	WINUT[7:0]							
Access	R/W	R/W	R/W	R/W	R/W	R/W	R/W	R/W
Reset	0	0	0	0	0	0	0	0

Bits 15:0 – WINUT[15:0] Window Upper Threshold
If the window monitor is enabled, these bits define the upper threshold value.

Downloaded from Arrow.com.

33.8.17 Gain Correction

Name: GAINCORR
Offset: 0x24
Reset: 0x0000
Property: Write-Protected

Bit	15	14	13	12	11	10	9	8
					GAINCORR[11:8]			
Access					R/W	R/W	R/W	R/W
Reset					0	0	0	0

Bit	7	6	5	4	3	2	1	0
	GAINCORR[7:0]							
Access	R/W	R/W	R/W	R/W	R/W	R/W	R/W	R/W
Reset	0	0	0	0	0	0	0	0

Bits 11:0 – GAINCORR[11:0] Gain Correction Value
If the CTRLB.CORREN bit is one, these bits define how the ADC conversion result is compensated for gain error before being written to the result register. The gain-correction is a fractional value, a 1-bit integer plusan 11-bit fraction, and therefore 1/2 <= GAINCORR < 2. GAINCORR values range from 0.10000000000 to 1.11111111111.

Downloaded from Arrow.com.

33.8.18 Offset Correction

Name: OFFSETCORR
Offset: 0x26
Reset: 0x0000
Property: Write-Protected

Bit	15	14	13	12	11	10	9	8
					OFFSETCORR[11:8]			
Access					R/W	R/W	R/W	R/W
Reset					0	0	0	0

Bit	7	6	5	4	3	2	1	0
	OFFSETCORR[7:0]							
Access	R/W	R/W	R/W	R/W	R/W	R/W	R/W	R/W
Reset	0	0	0	0	0	0	0	0

Bits 11:0 – OFFSETCORR[11:0] Offset Correction Value
If the CTRLB.CORREN bit is one, these bits define how the ADC conversion result is compensated for offset error before being written to the Result register. This OFFSETCORR value is in two's complement format.

Downloaded from Arrow.com.

33.8.19 Calibration

Name: CALIB
Offset: 0x28
Reset: 0x0000
Property: Write-Protected

Bit	15	14	13	12	11	10	9	8
						BIAS_CAL[2:0]		
Access						R/W	R/W	R/W
Reset						0	0	0

Bit	7	6	5	4	3	2	1	0
	LINEARITY_CAL[7:0]							
Access	R/W	R/W	R/W	R/W	R/W	R/W	R/W	R/W
Reset	0	0	0	0	0	0	0	0

Bits 10:8 – BIAS_CAL[2:0] Bias Calibration Value
This value from production test must be loaded from the NVM software calibration row into the CALIB register by software to allow the conversion and achieve the specified accuracy.
The copied value must not be modified.

Bits 7:0 – LINEARITY_CAL[7:0] Linearity Calibration Value
This value from production test must be loaded from the NVM software calibration row into the CALIB register by software to allow the conversion and achieve the specified accuracy.
The copied value must not be modified.

Downloaded from Arrow.com.

33.8.20 Debug Control

Name: DBGCTRL
Offset: 0x2A
Reset: 0x00
Property: Write-Protected

Bit	7	6	5	4	3	2	1	0
								DBGRUN
Access								R/W
Reset								0

Bit 0 – DBGRUN Debug Run
This bit can be changed only while the ADC is disabled.
This bit should be written only while a conversion is not ongoing.

Value	Description
0	The ADC is halted during debug mode.
1	The ADC continues normal operation during debug mode.

Downloaded from Arrow.com.

34. AC – Analog Comparators

34.1 Overview

The Analog Comparator (AC) supports multiple individual comparators. Each comparator (COMP) compares the voltage levels on two inputs, and provides a digital output based on this comparison. Each comparator may be configured to generate interrupt requests and peripheral events upon several different combinations of input change.

Hysteresis can be adjusted to achieve the optimal operation for each application.

The input selection includes four shared analog port pins and several internal signals. Each comparator output state can also be output on a pin for use by external devices.

The comparators are grouped in pairs on each port. The AC peripheral implements one or two pairs of comparators. These are called Comparator 0 (COMP0) and Comparator 1 (COMP1) for the first pair and Comparator 2 (COMP2) and Comparator 3 (COMP3) for the second pair. They have identical behaviors, but separate control registers. Each pair can be set in window mode to compare a signal to a voltage range instead of a single voltage level.

Note: The second pair of comparators mentioned above (the AC1 module) are only available on the 'L' variant devices. Refer to the Register Summary for start address of the AC1 module.

34.2 Features

- Up to Four individual comparators
- Analog comparator outputs available on pins
  - Asynchronous or synchronous
- Flexible input selection:
  - Four pins selectable for positive or negative inputs
  - Ground (for zero crossing)
  - Bandgap reference voltage
  - 64-level programmable VDD scaler per comparator
  - DAC (if available)
- Interrupt generation on:
  - Rising or falling edge
  - Toggle
  - End of comparison
- Window function interrupt generation on:
  - Signal above window
  - Signal inside window
  - Signal below window
  - Signal outside window
- Event generation on:
  - Comparator output
  - Window function inside/outside window
- Optional digital filter on comparator output

Downloaded from Arrow.com.

34.3 Block Diagram

Figure 34-1. Analog Comparator Block Diagram (First Pair)

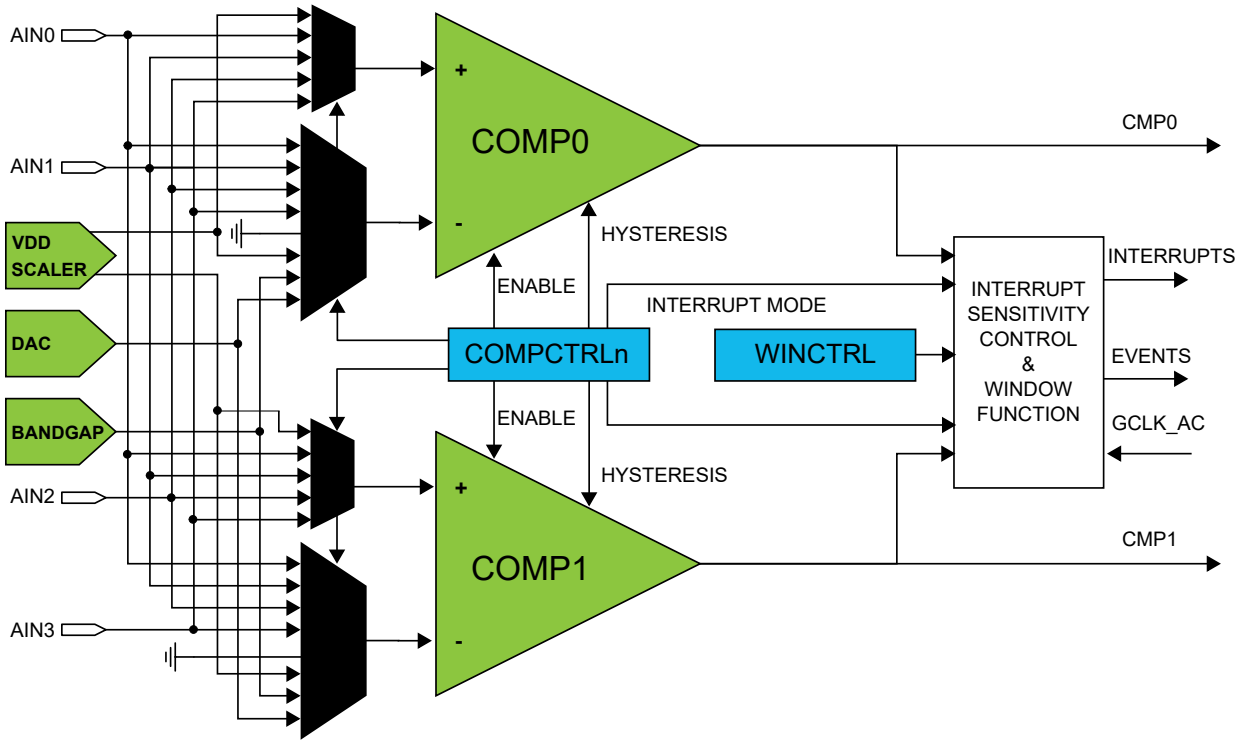

Figure 34-2. Analog Comparator Block Diagram (Second Pair)

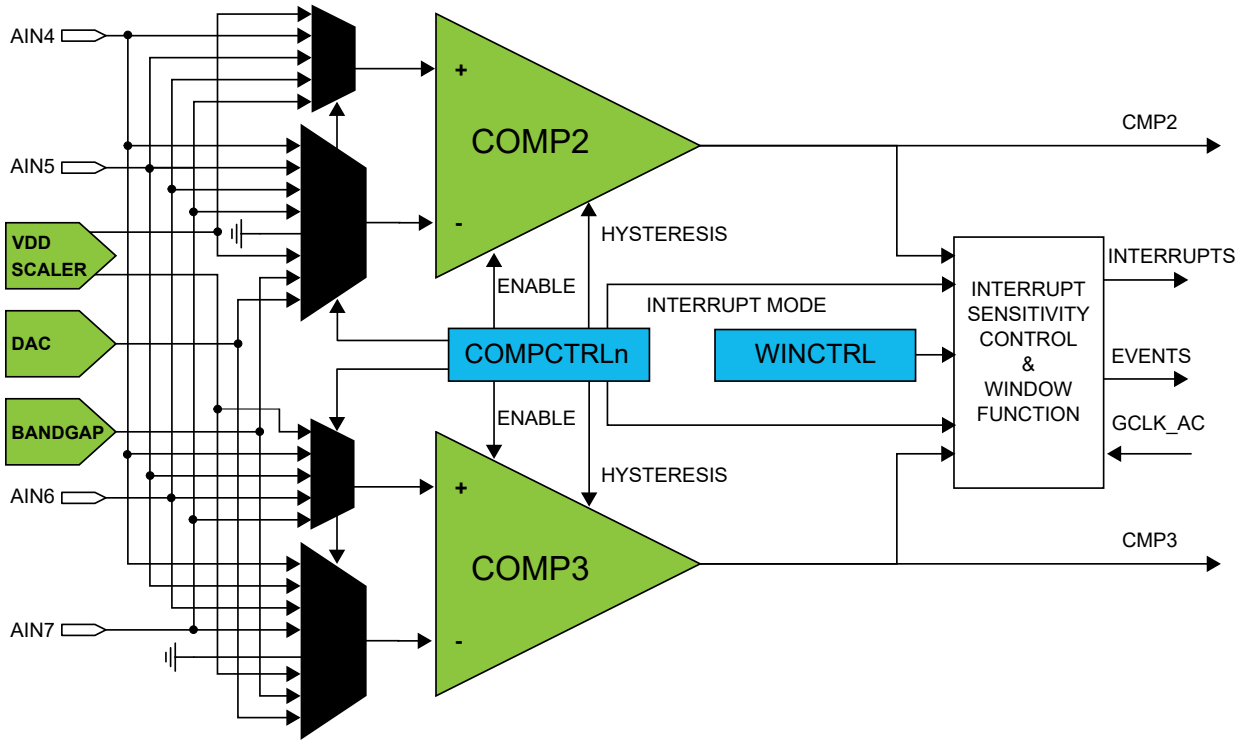

Downloaded from Arrow.com.

34.4 Signal Description

Signal	Description	Type
AIN[7..0]	Analog input	Comparator inputs
CMP[3..0]	Digital output	Comparator outputs

Refer to *I/O Multiplexing and Considerations* for details on the pin mapping for this peripheral. One signal can be mapped on several pins.

Related Links

7. I/O Multiplexing and Considerations

34.5 Product Dependencies

In order to use this peripheral, other parts of the system must be configured correctly, as described below.

34.5.1 I/O Lines

Using the AC's I/O lines requires the I/O pins to be configured. Refer to *PORT - I/O Pin Controller* for details.

Related Links

23. PORT - I/O Pin Controller

34.5.2 Power Management

The AC will continue to operate in any sleep mode where the selected source clock is running. The AC's interrupts can be used to wake up the device from sleep modes. Events connected to the event system can trigger other operations in the system without exiting sleep modes.

Related Links

16. PM – Power Manager

34.5.3 Clocks

The AC bus clock (CLK_AC_APB) can be enabled and disabled in the Main Clock module, MCLK (see *MCLK - Main Clock*, and the default state of CLK_AC_APB can be found in *Peripheral Clock Masking*.

Two generic clocks (GCLK_AC_DIG and GCLK_AC_ANA) are used by the AC. The digital clock (GCLK_AC_DIG) is required to provide the sampling rate for the comparators, while the analog clock (GCLK_AC_ANA) is required for low voltage operation (VDDANA < 2.5V) to ensure that the resistance of the analog input multiplexors remains low. These clocks must be configured and enabled in the Generic Clock Controller before using the peripheral.

This generic clock is asynchronous to the bus clock (CLK_AC_APB). Due to this asynchronicity, writes to certain registers will require synchronization between the clock domains. Refer to 34.6.15 Synchronization for further details.

Related Links

16. PM – Power Manager

34.5.4 DMA

Not applicable.

34.5.5 Interrupts

The interrupt request lines are connected to the interrupt controller. Using the AC interrupts requires the interrupt controller to be configured first. Refer to *Nested Vector Interrupt Controller* for details.

Related Links

11.2 Nested Vector Interrupt Controller

Downloaded from Arrow.com.

34.5.6 Events

The events are connected to the Event System. Refer to *EVSYS – Event System* for details on how to configure the Event System.

Related Links

24. EVSYS – Event System

34.5.7 Debug Operation

When the CPU is halted in Debug mode, this peripheral will continue normal operation. If the peripheral is configured to require periodical service by the CPU through interrupts or similar, improper operation or data loss may result during debugging. This peripheral can be forced to halt operation during debugging.

34.5.8 Register Access Protection

All registers with write-access can be write-protected optionally by the Peripheral Access Controller (PAC), except for the following registers:

- Control B register (CTRLB)
- Interrupt Flag register (INTFLAG)

Optional write-protection by the Peripheral Access Controller (PAC) is denoted by the "PAC Write-Protection" property in each individual register description.

PAC write-protection does not apply to accesses through an external debugger.

Related Links

11.6 Peripheral Access Controller (PAC)

34.5.9 Analog Connections

Each comparator has up to four I/O pins that can be used as analog inputs. Each pair of comparators shares the same four pins. These pins must be configured for analog operation before using them as comparator inputs.

Any internal reference source, such as a bandgap voltage reference, or DAC must be configured and enabled prior to its use as a comparator input.

34.6 Functional Description

34.6.1 Principle of Operation

Each comparator has one positive input and one negative input. Each positive input may be chosen from a selection of analog input pins. Each negative input may be chosen from a selection of both analog input pins and internal inputs, such as a bandgap voltage reference.

The digital output from the comparator is '1' when the difference between the positive and the negative input voltage is positive, and '0' otherwise.

The individual comparators can be used independently (normal mode) or paired to form a window comparison (window mode).

34.6.2 Basic Operation

34.6.2.1 Initialization

Before enabling the AC, the input and output events must be configured in the Event Control register (EVCTRL). These settings cannot be changed while the AC is enabled.

34.6.2.2 Enabling, Disabling and Resetting

The AC is enabled by writing a '1' to the Enable bit in the Control A register (CTRLA.ENABLE). The AC is disabled writing a '0' to CTRLA.ENABLE.

The AC is reset by writing a '1' to the Software Reset bit in the Control A register (CTRLA.SWRST). All registers in the AC will be reset to their initial state, and the AC will be disabled. Refer to *CTRLA* for details.

Downloaded from Arrow.com.

The individual comparators must be also enabled by writing a '1' to the Enable bit in the Comparator x Control registers (COMPCTRLx.ENABLE). However, when the AC is disabled, this will also disable the individual comparators, but will not clear their COMPCTRLx.ENABLE bits.

Related Links
34.8.1 CTRLA

34.6.2.3 Comparator Configuration

Each individual comparator must be configured by its respective Comparator Control register (COMPCTRLx) before that comparator is enabled. These settings cannot be changed while the comparator is enabled.

- Select the desired measurement mode with COMPCTRLx.SINGLE. See Starting a Comparison for more details.
- Select the hysteresis with the COMPCTRLx.HYST bit. See Input Hysteresis for more details.
- Select the comparator speed versus power with COMPCTRLx.SPEED. See Propagation Delay vs. Power Consumption for more details.
- Select the interrupt source with COMPCTRLx.INTSEL.
- Select the positive and negative input sources with the COMPCTRLx.MUXPOS and COMPCTRLx.MUXNEG bits. See Selecting Comparator Inputs for more details.
- Select the filtering option with COMPCTRLx.FLEN.
- Select standby operation with Run in Standby bit (COMPCTRLx.RUNSTDBY).

The individual comparators are enabled by writing a '1' to the Enable bit in the Comparator x Control registers (COMPCTRLx.ENABLE). The individual comparators are disabled by writing a '0' to COMPCTRLx.ENABLE. Writing a '0' to CTRLA.ENABLE will also disable all the comparators, but will not clear their COMPCTRLx.ENABLE bits.

34.6.2.4 Starting a Comparison

Each comparator channel can be in one of two different measurement modes, determined by the Single bit in the Comparator x Control register (COMPCTRLx.SINGLE):

- Continuous measurement
- Single-shot

After being enabled, a start-up delay is required before the result of the comparison is ready. This start-up time is measured automatically to account for environmental changes, such as temperature or voltage supply level, and is specified in *Electrical Characteristics*. During the start-up time, the COMP output is not available.

The comparator can be configured to generate interrupts when the output toggles, when the output changes from '0' to '1' (rising edge), when the output changes from '1' to '0' (falling edge) or at the end of the comparison. An end-of-comparison interrupt can be used with the single-shot mode to chain further events in the system, regardless of the state of the comparator outputs. The interrupt mode is set by the Interrupt Selection bit group in the Comparator Control register (COMPCTRLx.INTSEL). Events are generated using the comparator output state, regardless of whether the interrupt is enabled or not.

Related Links
37. Electrical Characteristics at 85°C

34.6.2.4.1 Continuous Measurement

Continuous measurement is selected by writing COMPCTRLx.SINGLE to zero. In continuous mode, the comparator is continuously enabled and performing comparisons. This ensures that the result of the latest comparison is always available in the Current State bit in the Status A register (STATUSA.STATEx).

After the start-up time has passed, a comparison is done and STATUSA is updated. The Comparator x Ready bit in the Status B register (STATUSB.READYx) is set, and the appropriate peripheral events and interrupts are also generated. New comparisons are performed continuously until the COMPCTRLx.ENABLE bit is written to zero. The start-up time applies only to the first comparison.

In continuous operation, edge detection of the comparator output for interrupts is done by comparing the current and previous sample. The sampling rate is the CLK_AC_DIG frequency. An example of continuous measurement is shown in the next figure.

Downloaded from Arrow.com.

Figure 34-3. Continuous Measurement Example

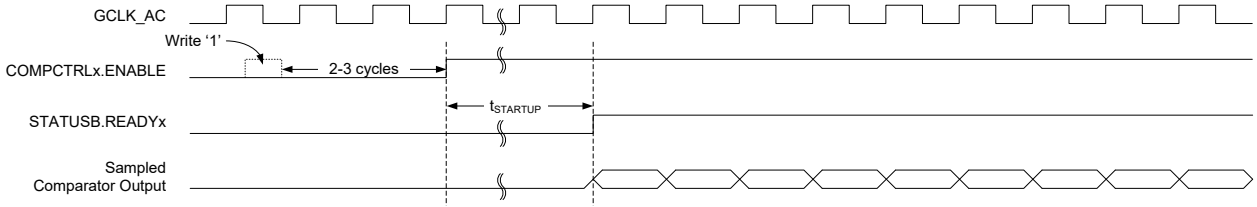

For low-power operation, comparisons can be performed during sleep modes without a clock. The comparator is enabled continuously, and changes of the comparator state are detected asynchronously. When a toggle occurs, the Power Manager will start CLK_AC_DIG to register the appropriate peripheral events and interrupts. The CLK_AC_DIG clock is then disabled again automatically, unless configured to wake up the system from sleep.

Related Links

37. Electrical Characteristics at 85°C

34.6.2.4.2 Single-Shot

Single-shot operation is selected by writing COMPCTRLx.SINGLE to '1'. During single-shot operation, the comparator is normally idle. The user starts a single comparison by writing '1' to the respective Start Comparison bit in the write-only Control B register (CTRLB.STARTx). The comparator is enabled, and after the start-up time has passed, a single comparison is done and STATUSA is updated. Appropriate peripheral events and interrupts are also generated. No new comparisons will be performed.

Writing '1' to CTRLB.STARTx also clears the Comparator x Ready bit in the Status B register (STATUSB.READYx). STATUSB.READYx is set automatically by hardware when the single comparison has completed.

To remove the need for polling, an additional means of starting the comparison is also available. A read of the Status C register (STATUSC) will start a comparison on all comparators currently configured for single-shot operation. The read will stall the bus until all enabled comparators are ready. If a comparator is already busy with a comparison, the read will stall until the current comparison is compete, and a new comparison will not be started.

A single-shot measurement can also be triggered by the Event System. Setting the Comparator x Event Input bit in the Event Control Register (EVCTRL.COMPEIx) enables triggering on incoming peripheral events. Each comparator can be triggered independently by separate events. Event-triggered operation is similar to user-triggered operation; the difference is that a peripheral event from another hardware module causes the hardware to automatically start the comparison and clear STATUSB.READYx.

To detect an edge of the comparator output in single-shot operation for the purpose of interrupts, the result of the current measurement is compared with the result of the previous measurement (one sampling period earlier). An example of single-shot operation is shown in the figure below.

Figure 34-4. Single-Shot Example

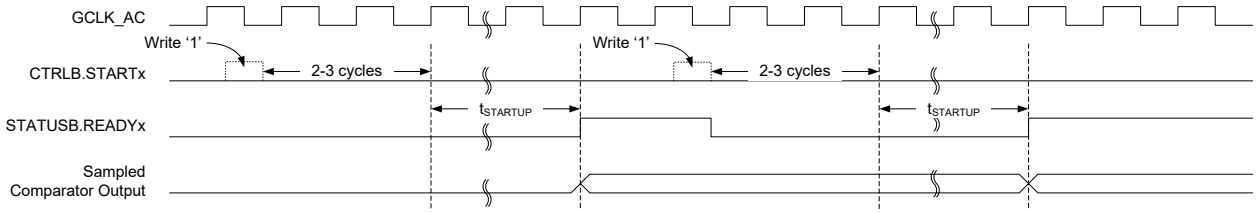

For low-power operation, event-triggered measurements can be performed during sleep modes. When the event occurs, the Power Manager will start CLK_AC_DIG. The comparator is enabled, and after the startup time has passed, a comparison is done and appropriate peripheral events and interrupts are also generated. The comparator and CLK_AC_DIG are then disabled again automatically, unless configured to wake up the system from sleep.

Related Links

37. Electrical Characteristics at 85°C

Downloaded from Arrow.com.

34.6.3 Selecting Comparator Inputs

Each comparator has one positive and one negative input. The positive input is one of the external input pins (AINx). The negative input can be fed either from an external input pin (AINx) or from one of the several internal reference voltage sources common to all comparators. The user selects the input source as follows:

- The positive input is selected by the Positive Input MUX Select bit group in the Comparator Control register (COMPCTRLx.MUXPOS)
- The negative input is selected by the Negative Input MUX Select bit group in the Comparator Control register (COMPCTRLx.MUXNEG)

In the case of using an external I/O pin, the selected pin must be configured for analog use in the PORT Controller by disabling the digital input and output. The switching of the analog input multiplexers is controlled to minimize crosstalk between the channels. The input selection must be changed only while the individual comparator is disabled.

Note: For internal use of the comparison results by the CCL, this bit must be 0x1 or 0x2.

34.6.4 Window Operation

Each comparator pair can be configured to work together in window mode. In this mode, a voltage range is defined, and the comparators give information about whether an input signal is within this range or not. Window mode is enabled by the Window Enable x bit in the Window Control register (WINCTRL.WENx). Both comparators in a pair must have the same measurement mode setting in their respective Comparator Control Registers (COMPCTRLx.SINGLE).

To physically configure the pair of comparators for window mode, the same I/O pin must be chosen as positive input for each comparator, providing a shared input signal. The negative inputs define the range for the window. In Figure 34-5, COMP0 defines the upper limit and COMP1 defines the lower limit of the window, as shown but the window will also work in the opposite configuration with COMP0 lower and COMP1 higher. The current state of the window function is available in the Window x State bit group of the Status register (STATUS.WSTATEx).

Window mode can be configured to generate interrupts when the input voltage changes to below the window, when the input voltage changes to above the window, when the input voltage changes into the window or when the input voltage changes outside the window. The interrupt selections are set by the Window Interrupt Selection bit field in the Window Control register (WINCTRL.WINTSEL). Events are generated using the inside/outside state of the window, regardless of whether the interrupt is enabled or not. Note that the individual comparator outputs, interrupts and events continue to function normally during window mode.

When the comparators are configured for window mode and single-shot mode, measurements are performed simultaneously on both comparators. Writing '1' to either Start Comparison bit in the Control B register (CTRLB.STARTx) will start a measurement. Likewise either peripheral event can start a measurement.

Downloaded from Arrow.com.

Figure 34-5. Comparators in Window Mode

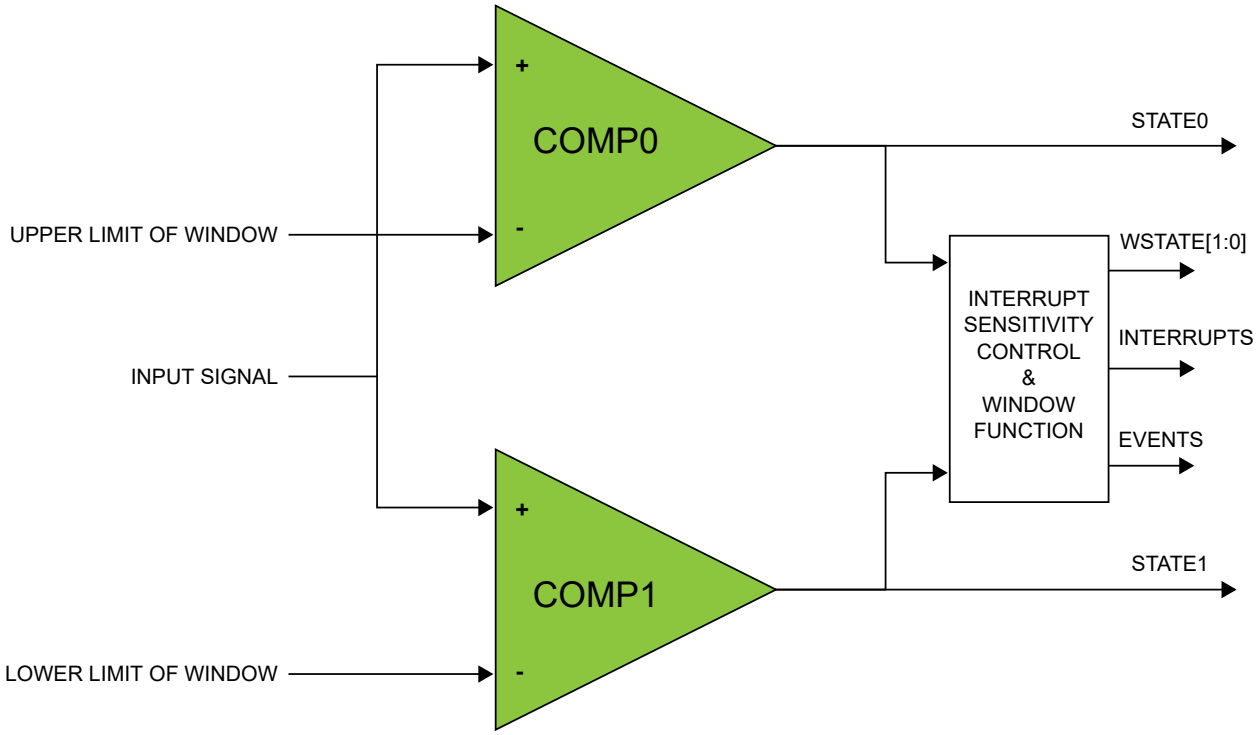

34.6.5 Voltage Doubler

The AC contains a voltage doubler that can reduce the resistance of the analog multiplexors when the supply voltage is below 2.5V. The voltage doubler is normally switched on/off automatically based on the supply level. When enabling the comparators, additional start-up time is required for the voltage doubler to settle. If the supply voltage is guaranteed to be above 2.5V, the voltage doubler can be disabled by writing the Low-Power Mux bit in the Control A register (CTRLA.LPMUX) to one. Disabling the voltage doubler saves power and reduces the start-up time.

34.6.6 V_{DDANA} Scaler

The V_{DDANA} scaler generates a reference voltage that is a fraction of the device's supply voltage, with 64 levels. One independent voltage channel is dedicated for each comparator. The scaler of a comparator is enabled when the Negative Input Mux bit field in the respective Comparator Control register (COMPCTRLx.MUXNEG) is set to 0x5 and the comparator is enabled. The voltage of each channel is selected by the Value bit field in the Scaler x registers (SCALERx.VALUE).

Downloaded from Arrow.com.

Figure 34-6. V_{DDANA} Scaler

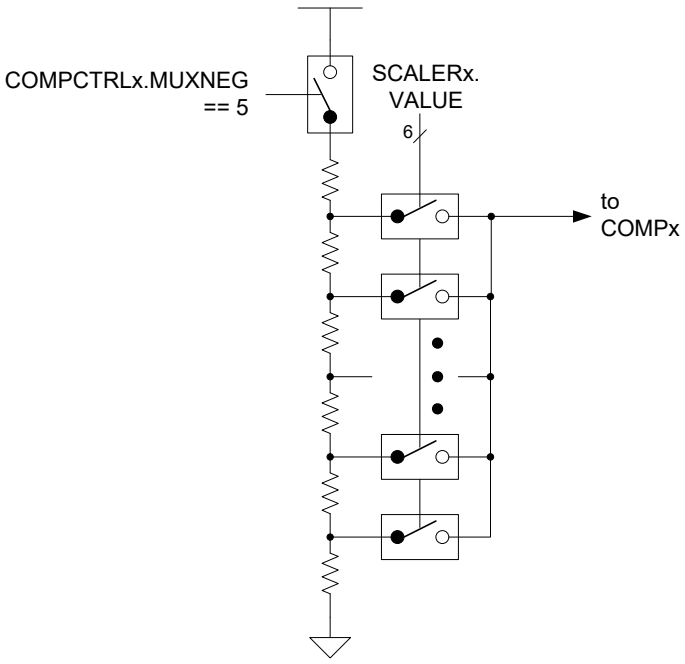

34.6.7 Input Hysteresis

Application software can selectively enable/disable hysteresis for the comparison. Applying hysteresis will help prevent constant toggling of the output, which can be caused by noise when the input signals are close to each other.

Hysteresis is enabled for each comparator individually by the Hysteresis Enable bit in the Comparator x Control register (COMPCTRLx.HYSTEN). Hysteresis is available only in continuous mode (COMPCTRLx.SINGLE=0).

34.6.8 Propagation Delay vs. Power Consumption

It is possible to trade off comparison speed for power efficiency to get the shortest possible propagation delay or the lowest power consumption. The speed setting is configured for each comparator individually by the Speed bit group in the Comparator x Control register (COMPCTRLx.SPEED). The Speed bits select the amount of bias current provided to the comparator, and as such will also affect the start-up time.

34.6.9 Filtering

The output of the comparators can be filtered digitally to reduce noise. The filtering is determined by the Filter Length bits in the Comparator Control x register (COMPCTRLx.FLEN), and is independent for each comparator. Filtering is selectable from none, 3-bit majority (N=3) or 5-bit majority (N=5) functions. Any change in the comparator output is considered valid only if N/2+1 out of the last N samples agree. The filter sampling rate is the GCLK_AC frequency.

Note that filtering creates an additional delay of N-1 sampling cycles from when a comparison is started until the comparator output is validated. For continuous mode, the first valid output will occur when the required number of filter samples is taken. Subsequent outputs will be generated every cycle based on the current sample plus the previous N-1 samples, as shown in Figure 34-7. For single-shot mode, the comparison completes after the Nth filter sample, as shown in Figure 34-8.

Figure 34-7. Continuous Mode Filtering

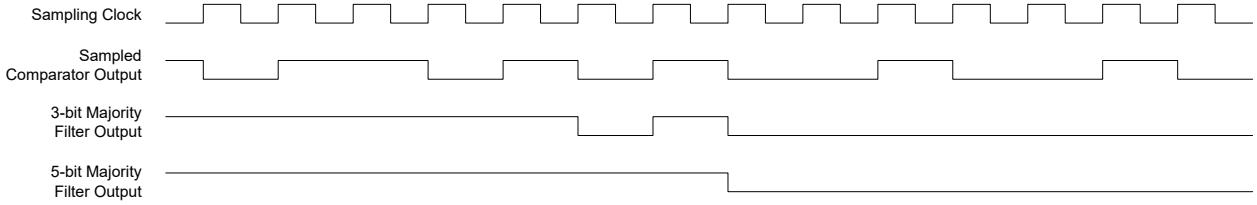

Downloaded from Arrow.com.

Figure 34-8. Single-Shot Filtering

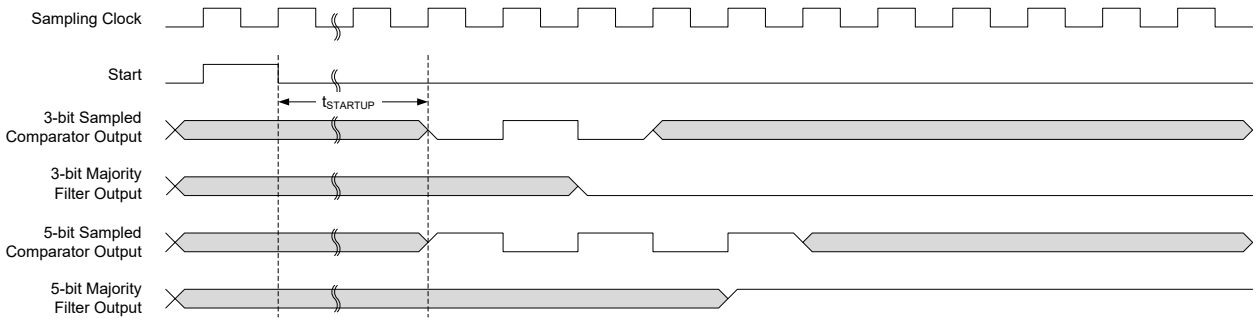

During sleep modes, filtering is supported only for single-shot measurements. Filtering must be disabled if continuous measurements will be done during sleep modes, or the resulting interrupt/event may be generated incorrectly.

34.6.10 Comparator Output

The output of each comparator can be routed to an I/O pin by setting the Output bit group in the Comparator Control x register (COMPCTRLx.OUT). This allows the comparator to be used by external circuitry. Either the raw, non-synchronized output of the comparator or the CLK_AC-synchronized version, including filtering, can be used as the I/O signal source. The output appears on the corresponding CMP[x] pin.

34.6.11 Offset Compensation

The Swap bit in the Comparator Control registers (COMPCTRLx.SWAP) controls switching of the input signals to a comparator's positive and negative terminals. When the comparator terminals are swapped, the output signal from the comparator is also inverted, as shown in Figure 34-9. This allows the user to measure or compensate for the comparator input offset voltage. As part of the input selection, COMPCTRLx.SWAP can be changed only while the comparator is disabled.

Figure 34-9. Input Swapping for Offset Compensation

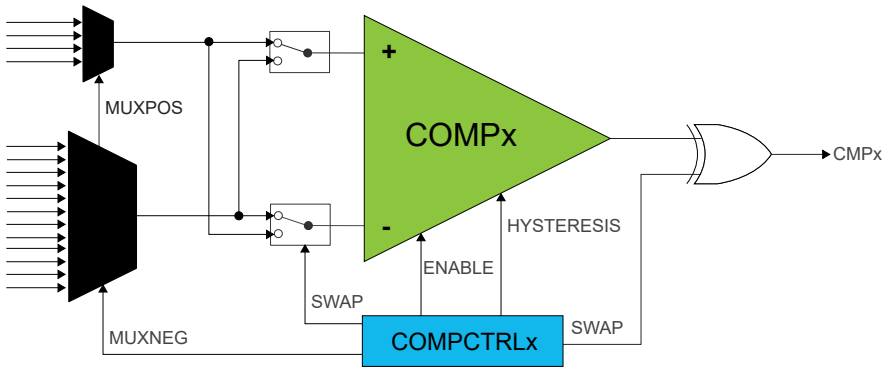

34.6.12 Interrupts

The AC has the following interrupt sources:

- Comparator (COMP0, COMP1, COMP2, COMP3): Indicates a change in comparator status.
- Window (WIN0, WIN1): Indicates a change in the window status.

Comparator interrupts are generated based on the conditions selected by the Interrupt Selection bit group in the Comparator Control registers (COMPCTRLx.INTSEL). Window interrupts are generated based on the conditions selected by the Window Interrupt Selection bit group in the Window Control register (WINCTRL.WINTSELx[1:0]).

Each interrupt source has an interrupt flag associated with it. The interrupt flag in the Interrupt Flag Status and Clear (INTFLAG) register is set when the interrupt condition occurs. Each interrupt can be individually enabled by writing a one to the corresponding bit in the Interrupt Enable Set (INTENSET) register, and disabled by writing a one to the corresponding bit in the Interrupt Enable Clear (INTENCLR) register. An interrupt request is generated when the interrupt flag is set and the corresponding interrupt is enabled. The interrupt request remains active until the interrupt flag is cleared, the interrupt is disabled, or the AC is reset. See INFLAG register for details on how to clear interrupt flags. All interrupt requests from the peripheral are ORed together on system level to generate

Downloaded from Arrow.com.

one combined interrupt request to the NVIC. The user must read the INTFLAG register to determine which interrupt condition is present.

Note that interrupts must be globally enabled for interrupt requests to be generated.

Related Links

11.2 Nested Vector Interrupt Controller

34.6.13 Events

The AC can generate the following output events:

- Comparator (COMP0, COMP1, COMP2, COMP3): Generated as a copy of the comparator status
- Window (WIN0, WIN1): Generated as a copy of the window inside/outside status

Output events must be enabled to be generated. Writing a one to an Event Output bit in the Event Control register (EVCTRL.COMPEOx) enables the corresponding output event. Writing a zero to this bit disables the corresponding output event. The events must be correctly routed in the Event System.

The AC can take the following action on an input event:

- Single-shot measurement
- Single-shot measurement in window mode

Writing a one to an Event Input bit into the Event Control register (EVCTRL.COMPEIx) enables the corresponding action on input event. Writing a zero to this bit disables the corresponding action on input event. Note that if several events are connected to the AC, the enabled action will be taken on any of the incoming events. Refer to the Event System chapter for details on configuring the event system.

When EVCTRL.COMPEIx is one, the event will start a comparison on COMPx after the start-up time delay. In normal mode, each comparator responds to its corresponding input event independently. For a pair of comparators in window mode, either comparator event will trigger a comparison on both comparators simultaneously.

34.6.14 Sleep Mode Operation

The Run in Standby bits in the Comparator x Control registers (COMPCTRLx.RUNSTDBY) control the behavior of the AC during standby sleep mode. Each RUNSTDBY bit controls one comparator. When the bit is zero, the comparator is disabled during sleep, but maintains its current configuration. When the bit is one, the comparator continues to operate during sleep. Note that when RUNSTDBY is zero, the analog blocks are powered off for the lowest power consumption. This necessitates a start-up time delay when the system returns from sleep.

When RUNSTDBY is one, any enabled AC interrupt source can wake up the CPU. While the CPU is sleeping, single-shot comparisons are only triggerable by events. The AC can also be used during sleep modes where the clock used by the AC is disabled, provided that the AC is still powered (not in shutdown). In this case, the behavior is slightly different and depends on the measurement mode.

Table 34-1. Sleep Mode Operation

COMPCTRLx.MODE	RUNSTDBY=0	RUNSTDBY=1
0 (Continuous)	COMPx disabled	GCLK_AC_DIG stopped, COMPx enabled
1 (Single-shot)	COMPx disabled	GCLK_AC_DIG stopped, COMPx enabled only when triggered by an input event

34.6.14.1 Continuous Measurement during Sleep

When a comparator is enabled in Continuous Measurement mode and GCLK_AC_DIG is disabled during sleep, the comparator will remain continuously enabled and will function asynchronously. The current state of the comparator is asynchronously monitored for changes. If an edge matching the interrupt condition is found, GCLK_AC_DIG is started to register the interrupt condition and generate events. If the interrupt is enabled in the Interrupt Enable registers (INTENCLR/SET), the AC can wake up the device; otherwise GCLK_AC_DIG is disabled until the next edge detection. Filtering is not possible with this configuration.

Downloaded from Arrow.com.

Figure 34-10. Continuous Mode SleepWalking

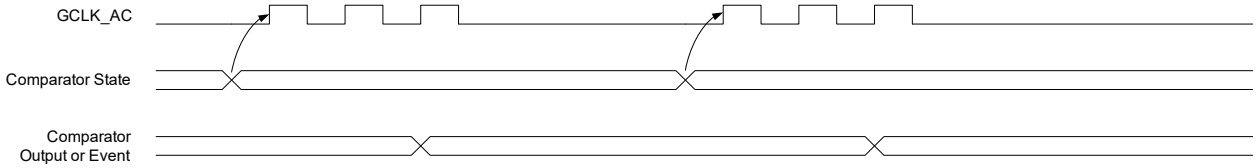

34.6.14.2 Single-Shot Measurement during Sleep

For low-power operation, event-triggered measurements can be performed during sleep modes. When the event occurs, the Power Manager will start GCLK_AC_DIG. The comparator is enabled, and after the start-up time has passed, a comparison is done, with filtering if desired, and the appropriate peripheral events and interrupts are also generated, as the figure below. The comparator and GCLK_AC_DIG are then disabled again automatically, unless configured to wake the system from sleep. Filtering is allowed with this configuration.

Figure 34-11. Single-Shot SleepWalking

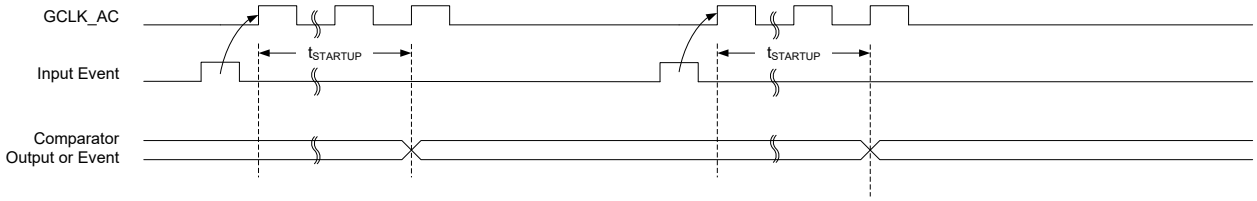

34.6.15 Synchronization

Due to asynchronicity between the main clock domain and the peripheral clock domains, some registers need to be synchronized when written or read.

The following bits are synchronized when written:

- Software Reset bit in control register (CTRLA.SWRST)
- Enable bit in control register (CTRLA.ENABLE)
- Enable bit in Comparator Control register (COMPCTRLn.ENABLE)

The following registers are synchronized when written:

- Window Control register (WINCTRL)

Required write-synchronization is denoted by the "Write-Synchronized" property in the register description.

Related Links

14.3 Register Synchronization

Downloaded from Arrow.com.

34.7 Register Summary

L variant devices have a second Analog Comparator, called AC1. (The registers for the first Analog Comparator (AC), start at memory offset 0x4200_4400. The registers for the AC1 start at memory offset 0x4200_5400.)

Offset	Name	Bit Pos.	7	6	5	4	3	2	1	0
0x00	CTRLA	7:0	LPMUX					RUNSTDBY	ENABLE	SWRST
0x01	CTRLB	7:0							START1	START0
0x02	EVCTRL	7:0				WINEO0			COMPEO1	COMPEO0
		15:8							COMPEI1	COMPEI0
0x04	INTENCLR	7:0				WIN0			COMP1	COMP0
0x05	INTENSET	7:0				WIN0			COMP1	COMP0
0x06	INTFLAG	7:0				WIN0			COMP1	COMP0
0x07	Reserved									
0x08	STATUSA	7:0			WSTATE0[1:0]				STATE1	STATE0
0x09	STATUSB	7:0	SYNCBUSY						READY1	READY0
0x0A	STATUSC	7:0			WSTATE0[1:0]				STATE1	STATE0
0x0B	Reserved									
0x0C	WINCTRL	7:0						WINTSEL0[1:0]		WEN0
0x0D ... 0x0F	Reserved									
0x10	COMPCTRL0	7:0		INTSEL[1:0]			SPEED[1:0]		SINGLE	ENABLE
		15:8	SWAP		MUXPOS[1:0]			MUXNEG[2:0]		
		23:16					HYST		OUT[1:0]	
		31:24						FLEN[2:0]		
0x14	COMPCTRL1	7:0		INTSEL[1:0]			SPEED[1:0]		SINGLE	ENABLE
		15:8	SWAP		MUXPOS[1:0]			MUXNEG[2:0]		
		23:16					HYST		OUT[1:0]	
		31:24						FLEN[2:0]		
0x18 ... 0x1F	Reserved									
0x20	SCALER0	7:0			VALUE[5:0]					
0x21	SCALER1	7:0			VALUE[5:0]					

34.8 Register Description

Registers can be 8, 16, or 32 bits wide. Atomic 8-, 16- and 32-bit accesses are supported. In addition, the 8-bit quarters and 16-bit halves of a 32-bit register, and the 8-bit halves of a 16-bit register can be accessed directly.

Some registers are optionally write-protected by the Peripheral Access Controller (PAC). Optional PAC write-protection is denoted by the "PAC Write-Protection" property in each individual register description. For details, refer to *Register Access Protection*.

Some registers are synchronized when read and/or written. Synchronization is denoted by the "Write-Synchronized" or the "Read-Synchronized" property in each individual register description. For details, refer to *Synchronization*.

Some registers are enable-protected, meaning they can only be written when the peripheral is disabled. Enable-protection is denoted by the "Enable-Protected" property in each individual register description.

Downloaded from Arrow.com.

34.8.1 Control A

Name: CTRLA
Offset: 0x00
Reset: 0x00
Property: PAC Write-Protection, Write-Synchronized

Bit	7	6	5	4	3	2	1	0
	LPMUX					RUNSTDBY	ENABLE	SWRST
Access	R/W					R/W	R/W	R/W
Reset	0					0	0	0

Bit 7 – LPMUX Low-Power Mux
This bit is not synchronized

Value	Description
0	The analog input muxes have low resistance, but consume more power at lower voltages (e.g., are driven by the voltage doubler).
1	The analog input muxes have high resistance, but consume less power at lower voltages (e.g., the voltage doubler is disabled).

Bit 2 – RUNSTDBY Run in Standby
This bit controls the behavior of the comparators during standby sleep mode.
This bit is not synchronized

Value	Description
0	The comparator pair is disabled during sleep.
1	The comparator pair continues to operate during sleep.

Bit 1 – ENABLE Enable
Due to synchronization, there is a delay from the time when the register is updated until the peripheral is enabled/disabled. The value written to CTRL.ENABLE will read back immediately after being written. STATUS.SYNCBUSY is set. STATUS.SYNCBUSY is cleared when the peripheral is enabled/disabled

Value	Description
0	The AC is disabled.
1	The AC is enabled. Each comparator must also be enabled individually by the Enable bit in the Comparator Control register (COMPCTRLn.ENABLE).

Bit 0 – SWRST Software Reset
Writing a '0' to this bit has no effect.
Writing a '1' to this bit resets all registers in the AC to their initial state, and the AC will be disabled.
Writing a '1' to CTRLA.SWRST will always take precedence, meaning that all other writes in the same write-operation will be discarded.
Due to synchronization, there is a delay from writing CTRLA.SWRST until the reset is complete. CTRLA.SWRST and STATUS.SYNCBUSY will both be cleared when the reset is complete.

Value	Description
0	There is no reset operation ongoing.
1	The reset operation is ongoing.

Downloaded from Arrow.com.

34.8.2 Control B

Name: CTRLB
Offset: 0x01
Reset: 0x00
Property: –

Bit	7	6	5	4	3	2	1	0
							START1	START0
Access							R/W	R/W
Reset							0	0

Bits 0, 1 – STARTx Comparator x Start Comparison
Writing a '0' to this field has no effect.
Writing a '1' to STARTx starts a single-shot comparison on COMPx if both the Single-Shot and Enable bits in the Comparator x Control Register are '1' (COMPCTRLx.SINGLE and COMPCTRLx.ENABLE). If comparator x is not implemented, or if it is not enabled in single-shot mode, Writing a '1' has no effect.
This bit always reads as zero.

Downloaded from Arrow.com.

34.8.3 Event Control

Name: EVCTRL
Offset: 0x02
Reset: 0x0000
Property: PAC Write-Protection, Enable-Protected

Bit	15	14	13	12	11	10	9	8
							COMPEI1	COMPEI0
Access							R/W	R/W
Reset							0	0

Bit	7	6	5	4	3	2	1	0
				WINEO0			COMPEO1	COMPEO0
Access				R/W			R/W	R/W
Reset				0			0	0

Bits 8, 9 – COMPEIx Comparator x Event Input
Note that several actions can be enabled for incoming events. If several events are connected to the peripheral, the enabled action will be taken for any of the incoming events. There is no way to tell which of the incoming events caused the action.
These bits indicate whether a comparison will start or not on any incoming event.

Value	Description
0	Comparison will not start on any incoming event.
1	Comparison will start on any incoming event.

Bit 4 – WINEOx Window x Event Output Enable
These bits indicate whether the window x function can generate a peripheral event or not.

Value	Description
0	Window x Event is disabled.
1	Window x Event is enabled.

Bits 0, 1 – COMPEOx Comparator x Event Output Enable
These bits indicate whether the comparator x output can generate a peripheral event or not.

Value	Description
0	COMPx event generation is disabled.
1	COMPx event generation is enabled.

Downloaded from Arrow.com.

34.8.4 Interrupt Enable Clear

Name: INTENCLR
Offset: 0x04
Reset: 0x00
Property: PAC Write-Protection

This register allows the user to disable an interrupt without doing a read-modify-write operation. Changes in this register will also be reflected in the Interrupt Enable Set register (INTENSET).

Bit	7	6	5	4	3	2	1	0
				WIN0			COMP1	COMP0
Access				R/W			R/W	R/W
Reset				0			0	0

Bit 4 – WINx Window x Interrupt Enable
Reading this bit returns the state of the Window x interrupt enable.
Writing a '0' to this bit has no effect.
Writing a '1' to this bit disables the Window x interrupt.

Value	Description
0	The Window x interrupt is disabled.
1	The Window x interrupt is enabled.

Bits 0, 1 – COMPx Comparator x Interrupt Enable
Reading this bit returns the state of the Comparator x interrupt enable.
Writing a '0' to this bit has no effect.
Writing a '1' to this bit disables the Comparator x interrupt.

Value	Description
0	The Comparator x interrupt is disabled.
1	The Comparator x interrupt is enabled.

Downloaded from Arrow.com.

34.8.5 Interrupt Enable Set

Name: INTENSET
Offset: 0x05
Reset: 0x00
Property: PAC Write-Protection

This register allows the user to enable an interrupt without doing a read-modify-write operation. Changes in this register will also be reflected in the Interrupt Enable Clear register (INTENCLR).

Bit	7	6	5	4	3	2	1	0
				WIN0			COMP1	COMP0
Access				R/W			R/W	R/W
Reset				0			0	0

Bit 4 – WINx Window x Interrupt Enable
Reading this bit returns the state of the Window x interrupt enable.
Writing a '0' to this bit has no effect.
Writing a '1' to this bit enables the Window x interrupt.

Value	Description
0	The Window x interrupt is disabled.
1	The Window x interrupt is enabled.

Bits 0, 1 – COMPx Comparator x Interrupt Enable
Reading this bit returns the state of the Comparator x interrupt enable.
Writing a '0' to this bit has no effect.
Writing a '1' to this bit will set the Ready interrupt bit and enable the Ready interrupt.

Value	Description
0	The Comparator x interrupt is disabled.
1	The Comparator x interrupt is enabled.

Downloaded from Arrow.com.

34.8.6 Interrupt Flag Status and Clear

Name: INTFLAG
Offset: 0x06
Reset: 0x00
Property: –

Bit	7	6	5	4	3	2	1	0
				WIN0			COMP1	COMP0
Access				R/W			R/W	R/W
Reset				0			0	0

Bit 4 – WINx Window x
This flag is set according to the Window x Interrupt Selection bit group in the WINCTRL register (WINCTRL.WINTSELx) and will generate an interrupt if INTENCLR/SET.WINx is also one.
Writing a '0' to this bit has no effect.
Writing a '1' to this bit clears the Window x interrupt flag.

Bits 0, 1 – COMPx Comparator x
Reading this bit returns the status of the Comparator x interrupt flag. If comparator x is not implemented, COMPx always reads as zero.
This flag is set according to the Interrupt Selection bit group in the Comparator x Control register (COMPCTRLx.INTSEL) and will generate an interrupt if INTENCLR/SET.COMPx is also one.
Writing a '0' to this bit has no effect.
Writing a '1' to this bit clears the Comparator x interrupt flag.

Downloaded from Arrow.com.

34.8.7 Status A

Name: STATUSA
Offset: 0x08
Reset: 0x00
Property: –

Bit	7	6	5	4	3	2	1	0
			WSTATE0[1:0]				STATE1	STATE0
Access			R	R			R	R
Reset			0	0			0	0

Bits 5:4 – WSTATE0[1:0] Window 0 Current State
These bits show the current state of the signal if the window 0 mode is enabled.

Value	Name	Description
0x0	ABOVE	Signal is above window
0x1	INSIDE	Signal is inside window
0x2	BELOW	Signal is below window
0x3		Reserved

Bits 0, 1 – STATEx Comparator x Current State
This bit shows the current state of the output signal from COMPx. STATEx is valid only when STATUSB.READYx is one.

Downloaded from Arrow.com.

34.8.8 Status B

Name: STATUSB
Offset: 0x09
Reset: 0x00
Property: –

Bit	7	6	5	4	3	2	1	0
	SYNCBUSY						READY1	READY0
Access	R						R	R
Reset	0						0	0

Bit 7 – SYNCBUSY Synchronization Busy
This bit is cleared when the synchronization of registers between the clock domains is complete.
This bit is set when the synchronization of registers between clock domains is started.

Bits 0, 1 – READYx Comparator x Ready
This bit is cleared when the comparator x output is not ready.
This bit is set when the comparator x output is ready.
If comparator x is not implemented, READYx always reads as zero.

Downloaded from Arrow.com.

34.8.9 Status C

Name: STATUSC
Offset: 0x0A
Reset: 0x00
Property: –

STATUSC is a copy of STATUSA (see STATUSA register), with the additional feature of automatically starting single-shot comparisons. A read of STATUSC will start a comparison on all comparators currently configured for single-shot operation. The read will stall the bus until all enabled comparators are ready. If a comparator is already busy with a comparison, the read will stall until the current comparison is compete, and a new comparison will not be started.

Bit	7	6	5	4	3	2	1	0
			WSTATE0[1:0]				STATE1	STATE0
Access			R	R			R	R
Reset			0	0			0	0

Bits 5:4 – WSTATE0[1:0] Window 0 Current State
These bits show the current state of the signal if the window 0 mode is enabled.

Value	Name	Description
0x0	ABOVE	Signal is above window
0x1	INSIDE	Signal is inside window
0x2	BELOW	Signal is below window
0x3		Reserved

Bits 0, 1 – STATEx Comparator x Current State
This bit shows the current state of the output signal from COMPx. STATEx is valid only when STATUSB.READYx is one.

Downloaded from Arrow.com.

34.8.10 Window Control

Name: WINCTRL
Offset: 0x0C
Reset: 0x00
Property: PAC Write-Protection, Write-Synchronized

Bit	7	6	5	4	3	2	1	0
						WINTSEL0[1:0]		WEN0
Access						R/W	R/W	R/W
Reset						0	0	0

Bits 2:1 – WINTSEL0[1:0] Window 0 Interrupt Selection
These bits configure the Interrupt mode for the Comparator Window 0 mode.

Value	Name	Description
0x0	ABOVE	Interrupt on signal above window
0x1	INSIDE	Interrupt on signal inside window
0x2	BELOW	Interrupt on signal below window
0x3	OUTSIDE	Interrupt on signal outside window

Bit 0 – WEN0 Window 0 Mode Enable

Value	Description
0	Window mode is disabled for comparators 0 and 1.
1	Window mode is enabled for comparators 0 and 1.

Downloaded from Arrow.com.

34.8.11 Comparator Control n

Name: COMPCTRL
Offset: 0x10 + n*0x04 [n=0..1]
Reset: 0x00000000
Property: PAC Write-Protection, Write-Synchronized

Bit	31	30	29	28	27	26	25	24
						FLEN[2:0]		
Access						R/W	R/W	R/W
Reset						0	0	0

Bit	23	22	21	20	19	18	17	16
					HYST		OUT[1:0]	
Access					R/W		R/W	R/W
Reset					0		0	0

Bit	15	14	13	12	11	10	9	8
	SWAP		MUXPOS[1:0]			MUXNEG[2:0]		
Access	R/W		R/W	R/W		R/W	R/W	R/W
Reset	0		0	0		0	0	0

Bit	7	6	5	4	3	2	1	0
		INTSEL[1:0]			SPEED[1:0]		SINGLE	ENABLE
Access		R/W	R/W		R/W	R/W	R/W	R/W
Reset		0	0		0	0	0	0

Bits 26:24 – FLEN[2:0] Filter Length
These bits configure the filtering for comparator n. COMPCTRLn.FLEN can only be written while COMPCTRLn.ENABLE is zero.
These bits are not synchronized.

Value	Name	Description
0x0	OFF	No filtering
0x1	MAJ3	3-bit majority function (2 of 3)
0x2	MAJ5	5-bit majority function (3 of 5)
0x3-0x7	N/A	Reserved

Bit 19 – HYST Hysteresis Enable
This bit indicates the Hysteresis mode of comparator n. Hysteresis is available only for Continuous mode (COMPCTRLn. SINGLE=0). COMPCTRLn.HYST can be written only while COMPCTRLn.ENABLE is zero.
This bit is not synchronized.

Value	Name
0	Hysteresis is disabled.
1	Hysteresis is enabled.

Bits 17:16 – OUT[1:0] Output
These bits configure the output selection for comparator n. COMPCTRLn.OUT can be written only while COMPCTRLn.ENABLE is zero.
These bits are not synchronized.

Value	Name	Description
0x0	OFF	The output of COMPn is not routed to the COMPn I/O port
0x1	ASYNC	The asynchronous output of COMPn is routed to the COMPn I/O port
0x2	SYNC	The synchronous output (including filtering) of COMPn is routed to the COMPn I/O port
0x3	N/A	Reserved

Downloaded from Arrow.com.

Bit 15 – SWAP Swap Inputs and Invert
This bit swaps the positive and negative inputs to COMPn and inverts the output. This function can be used for offset cancellation. COMPCTRLn.SWAP can be written only while COMPCTRLn.ENABLE is zero.
These bits are not synchronized.

Value	Description
0	The output of MUXPOS connects to the positive input, and the output of MUXNEG connects to the negative input.
1	The output of MUXNEG connects to the positive input, and the output of MUXPOS connects to the negative input.

Bits 13:12 – MUXPOS[1:0] Positive Input Mux Selection
These bits select which input will be connected to the positive input of comparator n. COMPCTRLn.MUXPOS can be written only while COMPCTRLn.ENABLE is zero.
These bits are not synchronized.

Value	Name	Description
0x0	PIN0	I/O pin 0
0x1	PIN1	I/O pin 1
0x2	PIN2	I/O pin 2
0x3	PIN3	I/O pin 3

Bits 10:8 – MUXNEG[2:0] Negative Input Mux Selection
These bits select which input will be connected to the negative input of comparator n. COMPCTRLn.MUXNEG can only be written while COMPCTRLn.ENABLE is zero.
These bits are not synchronized.

Value	Name	Description
0x0	PIN0	I/O pin 0
0x1	PIN1	I/O pin 1
0x2	PIN2	I/O pin 2
0x3	PIN3	I/O pin 3
0x4	GND	Ground
0x5	VSCALE	VDD scaler
0x6	BANDGAP	Internal bandgap voltage
0x7	DAC	DAC output

Bits 6:5 – INTSEL[1:0] Interrupt Selection
These bits select the condition for comparator n to generate an interrupt or event. COMPCTRLn.INTSEL can be written only while COMPCTRLn.ENABLE is zero.
These bits are not synchronized.

Value	Name	Description
0x0	TOGGLE	Interrupt on comparator output toggle
0x1	RISING	Interrupt on comparator output rising
0x2	FALLING	Interrupt on comparator output falling
0x3	EOC	Interrupt on end of comparison (single-shot mode only)

Bits 3:2 – SPEED[1:0] Speed Selection
This bit indicates the Speed/Propagation Delay mode of comparator n. COMPCTRLn.SPEED can be written only while COMPCTRLn.ENABLE is zero.
These bits are not synchronized.

Value	Name	Description
0x0	LOW	Low speed
0x1	HIGH	High speed
0x2-0x3	N/A	Reserved

Bit 1 – SINGLE Single-Shot Mode
This bit determines the operation of comparator n. COMPCTRLn.SINGLE can be written only while COMPCTRLn.ENABLE is zero.
These bits are not synchronized.

Downloaded from Arrow.com.

Value	Description
0	Comparator n operates in Continuous Measurement mode.
1	Comparator n operates in Single-shot mode.

Bit 0 – ENABLE Enable
Writing a zero to this bit disables comparator n.
Writing a one to this bit enables comparator n. After writing to this bit, the value read back will not change until the action initiated by the writing is complete.
Due to synchronization, there is a latency of at least two GCLK_AC_DIG clock cycles from updating the register until the comparator is enabled/disabled. The bit will continue to read the previous state while the change is in progress.
Writing a one to COMPCTRLn.ENABLE will prevent further changes to the other bits in COMPCTRLn. These bits remain protected until COMPCTRLn.ENABLE is written to zero and the write is synchronized.

Downloaded from Arrow.com.

34.8.12 Scaler n

Name: SCALER
Offset: 0x20 + n*0x01 [n=0..1]
Reset: 0x00
Property: PAC Write-Protection

Bit	7	6	5	4	3	2	1	0
			VALUE[5:0]					
Access			R/W	R/W	R/W	R/W	R/W	R/W
Reset			0	0	0	0	0	0

Bits 5:0 – VALUE[5:0] Scaler Value
These bits define the scaling factor for channel n of the V_{DD} voltage scaler. The output voltage, V_{SCALE}, is:

$$V_{SCALE} = \frac{V_{DD} \cdot (VALUE+1)}{64}$$

Downloaded from Arrow.com.

35. DAC – Digital-to-Analog Converter

35.1 Overview

The Digital-to-Analog Converter (DAC) converts a digital value to a voltage. The DAC has one channel with 10-bit resolution, and it is capable of converting up to 350,000 samples per second (350ksps).

35.2 Features

- DAC with 10-bit resolution
- Up to 350ksps conversion rate
- Multiple trigger sources
- High-drive capabilities
- Output can be used as input to the Analog Comparator (AC)
- DMA support

35.3 Block Diagram

Figure 35-1. DAC Block Diagram

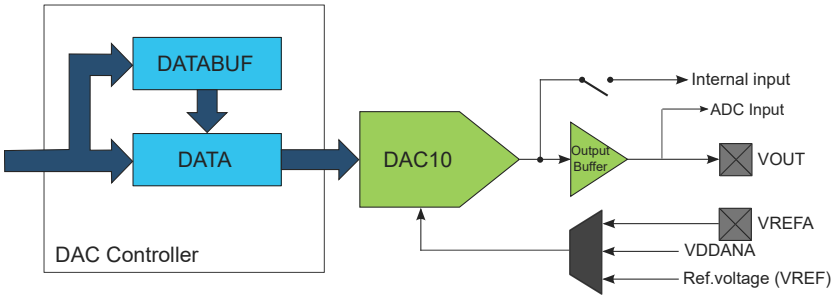

35.4 Signal Description

Signal Name	Type	Description
VOUT	Analog output	DAC output
VREFA	Analog input	External reference

Related Links

7. I/O Multiplexing and Considerations

35.5 Product Dependencies

In order to use this peripheral, other parts of the system must be configured correctly, as described below.

35.5.1 I/O Lines

Using the DAC Controller's I/O lines requires the I/O pins to be configured using the port configuration (PORT).

Related Links

23. PORT - I/O Pin Controller

Downloaded from Arrow.com.

35.5.2 Power Management

The DAC will continue to operate in any Sleep mode where the selected source clock is running.

The DAC interrupts can be used to wake up the device from sleep modes.

Events connected to the event system can trigger other operations in the system without exiting sleep modes.

Related Links

16. PM – Power Manager

35.5.3 Clocks

The DAC bus clock (CLK_DAC_APB) can be enabled and disabled by the Power Manager, and the default state of CLK_DAC_APB can be found in the *Peripheral Clock Masking* section.

A generic clock (GCLK_DAC) is required to clock the DAC Controller. This clock must be configured and enabled in the Generic Clock Controller before using the DAC Controller. Refer to *GCLK – Generic Clock Controller* for details.

This generic clock is asynchronous to the bus clock (CLK_DAC_APB). Due to this asynchronicity, writes to certain registers will require synchronization between the clock domains. Refer to 35.6.7 Synchronization for further details.

Related Links

16.6.2.6 Peripheral Clock Masking
15. GCLK - Generic Clock Controller

35.5.4 DMA

The DMA request line is connected to the DMA Controller (DMAC). Using the DAC Controller DMA requests requires to configure the DMAC first.

Related Links

20. DMAC – Direct Memory Access Controller

35.5.5 Interrupts

The interrupt request line is connected to the interrupt controller. Using the DAC Controller interrupt(s) requires the interrupt controller to be configured first.

Related Links

11.2 Nested Vector Interrupt Controller

35.5.6 Events

The events are connected to the Event System.

Related Links

24. EVSYS – Event System

35.5.7 Debug Operation

When the CPU is halted in debug mode the DAC will halt normal operation. Any on-going conversions will be completed. The DAC can be forced to continue normal operation during debugging. If the DAC is configured in a way that requires it to be periodically serviced by the CPU through interrupts or similar, improper operation or data loss may result during debugging.

35.5.8 Register Access Protection

All registers with write-access can be write-protected optionally by the Peripheral Access Controller (PAC), except the following registers:

- Interrupt Flag Status and Clear (INTFLAG) register
- Data Buffer (DATABUF) register

Optional write-protection by the Peripheral Access Controller (PAC) is denoted by the "PAC Write-Protection" property in each individual register description.

PAC write-protection does not apply to accesses through an external debugger

Downloaded from Arrow.com.

Related Links
11.6 Peripheral Access Controller (PAC)

35.5.9 Analog Connections

The DAC has one output pin (VOUT) and one analog input pin (VREFA) that must be configured first.

When internal input is used, it must be enabled before DAC Controller is enabled.

35.6 Functional Description

35.6.1 Principle of Operation

The DAC converts the digital value located in the Data register (DATA) into an analog voltage on the DAC output (VOUT).

A conversion is started when new data is written to the Data register. The resulting voltage is available on the DAC output after the conversion time. A conversion can also be started by input events from the Event System.

35.6.2 Basic Operation

35.6.2.1 Initialization

The following registers are enable-protected, meaning they can only be written when the DAC is disabled (CTRLA.ENABLE is zero):

- Control B register (CTRLB)
- Event Control register (EVCTRL)

Enable-protection is denoted by the Enable-Protected property in the register description.

Before enabling the DAC, it must be configured by selecting the voltage reference using the Reference Selection bits in the Control B register (CTRLB.REFSEL).

35.6.2.2 Enabling, Disabling and Resetting

The DAC Controller is enabled by writing a '1' to the Enable bit in the Control A register (CTRLA.ENABLE). The DAC Controller is disabled by writing a '0' to CTRLA.ENABLE.

The DAC Controller is reset by writing a '1' to the Software Reset bit in the Control A register (CTRLA.SWRST). All registers in the DAC will be reset to their initial state, and the DAC Controller will be disabled. Refer to the CTRLA register for details.

35.6.2.3 Enabling the Output Buffer

To enable the DAC output on the V_{OUT} pin, the output driver must be enabled by writing a one to the External Output Enable bit in the Control B register (CTRLB.EOEN).

The DAC output buffer provides a high-drive-strength output, and is capable of driving both resistive and capacitive loads. To minimize power consumption, the output buffer should be enabled only when external output is needed.

35.6.2.4 Digital to Analog Conversion

The DAC converts a digital value (stored in the DATA register) into an analog voltage. The conversion range is between GND and the selected DAC voltage reference. The default voltage reference is the internal reference voltage. Other voltage reference options are the analog supply voltage (VDDANA) and the external voltage reference (VREFA). The voltage reference is selected by writing to the Reference Selection bits in the Control B register (CTRLB.REFSEL).

The output voltage from the DAC can be calculated using the following formula:

$$V_{\mathrm{OUT}} = \frac{\mathrm{DATA}}{0x3\mathrm{FF}} \cdot \mathrm{VREF}$$

A new conversion starts as soon as a new value is loaded into DATA. DATA can either be loaded via the APB bus during a CPU write operation, using DMA, or from the DATABUF register when a START event occurs. Refer to 35.6.5 Events for details. As there is no automatic indication that a conversion is done, the sampling period must be greater than or equal to the specified conversion time.

Downloaded from Arrow.com.

35.6.3 DMA Operation

The DAC generates the following DMA request:

- Data Buffer Empty (EMPTY): The request is set when data is transferred from DATABUF to the internal data buffer of DAC. The request is cleared when DATABUF register is written, or by writing a one to the EMPTY bit in the Interrupt Flag register (INTFLAG.EMPTY).

For each Start Conversion event, DATABUF is transferred into DATA and the conversion starts. When DATABUF is empty, the DAC generates the DMA request for new data. As DATABUF is initially empty, a DMA request is generated whenever the DAC is enabled.

If the CPU accesses the registers that are the source of a DMA request set/clear condition, the DMA request can be lost or the DMA transfer can be corrupted, if enabled.

When DAC registers are write-protected by Peripheral Access Controller, DATABUF cannot be written. To bypass DATABUF write protection, Bypass DATABUF Write Protection bit (CTRLB.BDWP) must be written to '1'

35.6.4 Interrupts

The DAC Controller has the following interrupt sources:

- Data Buffer Empty (EMPTY): Indicates that the internal data buffer of the DAC is empty.
- Underrun (UNDERRUN): Indicates that the internal data buffer of the DAC is empty and a DAC start of conversion event occurred. Refer to 35.6.5 Events for details.
- Synchronization Ready (SYNCRDY): this asynchronous interrupt can be used to wake-up the device from any sleep mode.

Each interrupt source has an interrupt flag associated with it. The interrupt flag in the Interrupt Flag Status and Clear register (INTFLAG) is set when the interrupt condition occurs. Each interrupt can be individually enabled by writing a one to the corresponding bit in the Interrupt Enable Set register (INTENSET), and disabled by writing a one to the corresponding bit in the Interrupt Enable Clear register (INTENCLR).

An interrupt request is generated when the interrupt flag is set and the corresponding interrupt is enabled. The interrupt request remains active until the interrupt flag is cleared, the interrupt is disabled or the DAC is reset. See INTFLAG register for details on how to clear interrupt flags.

All interrupt requests from the peripheral are ORed together on system level to generate one combined interrupt request to the NVIC. The user must read the INTFLAG register to determine which interrupt condition is present.

Note that interrupts must be globally enabled for interrupt requests to be generated..

Related Links

11.2 Nested Vector Interrupt Controller

35.6.5 Events

The DAC Controller can generate the following output events:

- Data Buffer Empty (EMPTY): Generated when the internal data buffer of the DAC is empty. Refer to DMA Operation for details.

Writing a '1' to an Event Output bit in the Event Control register (EVCTRL.EMPTYEO) enables the corresponding output event. Writing a '0' to this bit disables the corresponding output event.

The DAC can take the following action on an input event:

- Start Conversion (START): DATABUF value is transferred into DATA as soon as the DAC is ready for the next conversion, and then conversion is started. START is considered as asynchronous to GCLK_DAC thus it is resynchronized in DAC Controller. Refer to 35.6.2.4 Digital to Analog Conversion for details.

Writing a '1' to an Event Input bit in the Event Control register (EVCTRL.STARTEI) enables the corresponding action on an input event. Writing a '0' to this bit disables the corresponding action on input event.

Notes:

- When several events are connected to the DAC Controller, the enabled action will be taken on any of the incoming events.
- When a DAC Start Conversion event is enabled, only DATABUF must be written (not DATA)

Downloaded from Arrow.com.

By default, DAC Controller detects rising edge events. Falling edge detection can be enabled by writing a '1' to EVCTRL.INVEIx.

Related Links

24. EVSYS – Event System

35.6.6 Sleep Mode Operation

The generic clock for the DAC is running in idle sleep mode. If the Run In Standby bit in the Control A register (CTRLA.RUNSTDBY) is one, the DAC output buffer will keep its value in standby sleep mode. If CTRLA.RUNSTDBY is zero, the DAC output buffer will be disabled in standby sleep mode.

35.6.7 Synchronization

Due to the asynchronicity between main clock domain and the peripheral clock domains, some registers must be synchronized when written or read. A register can require these:

- Synchronization when written
- Synchronization when read
- Synchronization when written and read
- No synchronization

When executing an operation that requires synchronization, the Synchronization Busy bit in the Status register (STATUS.SYNCBUSY) will be set immediately, and cleared when synchronization is complete.

If an operation that requires synchronization is executed while its busy bit is one, the operation is discarded and an error is generated.

The following bits need synchronization when written:

- The Software Reset bit in the Control A register (CTRLA.SWRST)
- The Enable bit in the Control A register (CTRLA.ENABLE)
- All bits in the Data register (DATA)
- All bits in the Data Buffer register (DATABUF)

Write-synchronization is denoted by the Write-Synchronized property in the register description.

No bits need synchronization when read.

35.6.8 Additional Features

35.6.8.1 DAC as an Internal Reference

The DAC output can be internally enabled as input to the analog comparator. This is enabled by writing a one to the Internal Output Enable bit in the Control B register (CTRLB.IOEN). It is possible to have the internal and external output enabled simultaneously.

The DAC output can also be enabled as input to the Analog-to-Digital Converter. In this case, the output buffer must be enabled.

35.6.8.2 Data Buffer

The Data Buffer register (DATABUF) and the Data register (DATA) are linked together to form a two-stage FIFO. The DAC uses the Start Conversion event to load data from DATABUF into DATA and start a new conversion. The Start Conversion event is enabled by writing a one to the Start Event Input bit in the Event Control register (EVCTRL.STARTEI). If a Start Conversion event occurs when DATABUF is empty, an Underrun interrupt request is generated if the Underrun interrupt is enabled.

The DAC can generate a Data Buffer Empty event when DATABUF becomes empty and new data can be loaded to the buffer. The Data Buffer Empty event is enabled by writing a one to the Empty Event Output bit in the Event Control register (EVCTRL.EMPTYEO). A Data Buffer Empty interrupt request is generated if the Data Buffer Empty interrupt is enabled.

35.6.8.3 Voltage Pump

When the DAC is used at operating voltages lower than 2.5V, the voltage pump must be enabled. This enabling is done automatically, depending on operating voltage.

Downloaded from Arrow.com.

The voltage pump can be disabled by writing a one to the Voltage Pump Disable bit in the Control B register (CTRLB.VPD). This can be used to reduce power consumption when the operating voltage is above 2.5V.

The voltage pump uses the asynchronous GCLK_DAC clock, and requires that the clock frequency be at least four times higher than the sampling period.

© 2021 Microchip Technology Inc.
and its subsidiaries

Downloaded from Arrow.com.

35.7 Register Summary

Offset	Name	Bit Pos.	7	6	5	4	3	2	1	0
0x00	CTRLA	7:0						RUNSTDBY	ENABLE	SWRST
0x01	CTRLB	7:0	REFSEL[1:0]			BDWP	VPD	LEFTADJ	IOEN	EOEN
0x02	EVCTRL	7:0							EMPTYEO	STARTEI
0x03	Reserved									
0x04	INTENCLR	7:0						SYNCRDY	EMPTY	UNDERRUN
0x05	INTENSET	7:0						SYNCRDY	EMPTY	UNDERRUN
0x06	INTFLAG	7:0						SYNCRDY	EMPTY	UNDERRUN
0x07	STATUS	7:0	SYNCBUSY							
0x08	DATA	7:0	DATA[7:0]							
		15:8	DATA[15:8]							
0x0A ... 0x0B	Reserved									
0x0C	DATABUF	7:0	DATABUF[7:0]							
		15:8	DATABUF[15:8]							

35.8 Register Description

Registers can be 8, 16, or 32 bits wide. Atomic 8-, 16- and 32-bit accesses are supported. In addition, the 8-bit quarters and 16-bit halves of a 32-bit register, and the 8-bit halves of a 16-bit register can be accessed directly.

Some registers are optionally write-protected by the Peripheral Access Controller (PAC). Optional PAC write-protection is denoted by the "PAC Write-Protection" property in each individual register description. For details, refer to 35.5.8 Register Access Protection.

Some registers are synchronized when read and/or written. Synchronization is denoted by the "Write-Synchronized" or the "Read-Synchronized" property in each individual register description. For details, refer to 35.6.7 Synchronization.

Some registers are enable-protected, meaning they can only be written when the peripheral is disabled. Enable-protection is denoted by the "Enable-Protected" property in each individual register description.

Downloaded from Arrow.com.

35.8.1 Control A

Name: CTRLA
Offset: 0x00
Reset: 0x00
Property: PAC Write-Protection, Write-Synchronized

Bit	7	6	5	4	3	2	1	0
						RUNSTDBY	ENABLE	SWRST
Access						R/W	R/W	R/W
Reset						0	0	0

Bit 2 – RUNSTDBY Run in Standby
This bit is not synchronized

Value	Description
0	The DAC output buffer is disabled in standby sleep mode.
1	The DAC output buffer can be enabled in standby sleep mode.

Bit 1 – ENABLE Enable DAC Controller
Due to synchronization there is delay from writing CTRLA.ENABLE until the peripheral is enabled/disabled. The value written to CTRLA.ENABLE will read back immediately and the corresponding bit in the Synchronization Busy register (SYNCBUSY.ENABLE) will be set. SYNCBUSY.ENABLE will be cleared when the operation is complete.

Value	Description
0	The peripheral is disabled or being disabled.
1	The peripheral is enabled or being enabled.

Bit 0 – SWRST Software Reset
Writing '0' to this bit has no effect.
Writing '1' to this bit resets all registers in the DAC to their initial state, and the DAC will be disabled.
Writing a '1' to CTRLA.SWRST will always take precedence, meaning that all other writes in the same write-operation will be discarded.
Due to synchronization there is a delay from writing CTRLA.SWRST until the reset is complete. CTRLA.SWRST and SYNCBUSY.SWRST will both be cleared when the reset is complete.

Value	Description
0	There is no reset operation ongoing.
1	The reset operation is ongoing.

Downloaded from Arrow.com.

35.8.2 Control B

Name: CTRLB
Offset: 0x01
Reset: 0x00
Property: PAC Write-Protection, Enable-Protected

Bit	7	6	5	4	3	2	1	0
	REFSEL[1:0]			BDWP	VPD	LEFTADJ	IOEN	EOEN
Access	R/W	R/W		R/W	R/W	R/W	R/W	R/W
Reset	0	0		0	0	0	0	0

Bits 7:6 – REFSEL[1:0] Reference Selection
This bit field selects the Reference Voltage for the DAC.
Note: INT1V is the buffered internal reference of 1.0V, derived from the internal 1.1V bandgap reference.

Value	Name	Description
0x0	INT1V	Internal voltage reference
0x1	VDDANA	Analog voltage supply
0x2	VREFA	External reference
0x3		Reserved

Bit 4 – BDWP Bypass DATABUF Write Protection
This bit can bypass DATABUF write protection.

Value	Description
0	DATABUF register is write-protected by Peripheral Access Controller.
1	DATABUF register is not write-protected.

Bit 3 – VPD Voltage Pump Disabled
This bit controls the behavior of the voltage pump.

Value	Description
0	Voltage pump is turned on/off automatically
1	Voltage pump is disabled.

Bit 2 – LEFTADJ Left-Adjusted Data
This bit controls how the 10-bit conversion data is adjusted in the Data and Data Buffer registers.

Value	Description
0	DATA and DATABUF registers are right-adjusted.
1	DATA and DATABUF registers are left-adjusted.

Bit 1 – IOEN Internal Output Enable

Value	Description
0	Internal DAC output not enabled.
1	Internal DAC output enabled to be used by the AC.

Bit 0 – EOEN External Output Enable

Value	Description
0	The DAC output is turned off.
1	The high-drive output buffer drives the DAC output to the internal ADC Positive Mux Input Selection and to the V_{OUT} pin.

Downloaded from Arrow.com.

35.8.3 Event Control

Name: EVCTRL
Offset: 0x02
Reset: 0x00
Property: PAC Write-Protection

Bit	7	6	5	4	3	2	1	0
							EMPTYEO	STARTEI
Access							R/W	R/W
Reset							0	0

Bit 1 – EMPTYEO Data Buffer Empty Event Output
This bit indicates whether or not the Data Buffer Empty event is enabled and will be generated when the Data Buffer register is empty.

Value	Description
0	Data Buffer Empty event is disabled and will not be generated.
1	Data Buffer Empty event is enabled and will be generated.

Bit 0 – STARTEI Start Conversion Event Input
This bit indicates whether or not the Start Conversion event is enabled .

Value	Description
0	A new conversion will not be triggered on any incoming event. Only DATA must be written (not DATABUF).
1	A new conversion will be triggered on any incoming event. Only DATABUF must be written (not DATA).

Downloaded from Arrow.com.

35.8.4 Interrupt Enable Clear

Name: INTENCLR
Offset: 0x04
Reset: 0x00
Property: PAC Write-Protection

This register allows the user to disable an interrupt without doing a read-modify-write operation. Changes in this register will also be reflected in the Interrupt Enable Set register (INTENSET).

Bit	7	6	5	4	3	2	1	0
						SYNCRDY	EMPTY	UNDERRUN
Access						R/W	R/W	R/W
Reset						0	0	0

Bit 2 – SYNCRDY Synchronization Ready Interrupt Enable
Writing a '0' to this bit has no effect.
Writing a '1' to this bit will clear the Synchronization Ready Interrupt Enable bit, which disables the Synchronization Ready interrupt.

Value	Description
0	The Synchronization Ready interrupt is disabled.
1	The Synchronization Ready interrupt is enabled.

Bit 1 – EMPTY Data Buffer Empty Interrupt Enable
Writing a '0' to this bit has no effect.
Writing a '1' to this bit will clear the Data Buffer Empty Interrupt Enable bit, which disables the Data Buffer Empty interrupt.

Value	Description
0	The Data Buffer Empty interrupt is disabled.
1	The Data Buffer Empty interrupt is enabled.

Bit 0 – UNDERRUN Underrun Interrupt Enable
Writing a '0' to this bit has no effect.
Writing a '1' to this bit will clear the Data Buffer Underrun Interrupt Enable bit, which disables the Data Buffer Underrun interrupt.

Value	Description
0	The Data Buffer Underrun interrupt is disabled.
1	The Data Buffer Underrun interrupt is enabled.

Downloaded from Arrow.com.

35.8.5 Interrupt Enable Set

Name: INTENSET
Offset: 0x05
Reset: 0x00
Property: PAC Write-Protection

This register allows the user to enable an interrupt without doing a read-modify-write operation. Changes in this register will also be reflected in the Interrupt Enable Clear register (INTENCLR).

Bit	7	6	5	4	3	2	1	0
						SYNCRDY	EMPTY	UNDERRUN
Access						R/W	R/W	R/W
Reset						0	0	0

Bit 2 – SYNCRDY Synchronization Ready Interrupt Enable
Writing a '0' to this bit has no effect.
Writing a '1' to this bit will set the Synchronization Ready Interrupt Enable bit, which enables the Synchronization Ready interrupt.

Value	Description
0	The Synchronization Ready interrupt is disabled.
1	The Synchronization Ready interrupt is enabled.

Bit 1 – EMPTY Data Buffer Empty Interrupt Enable
Writing a '0' to this bit has no effect.
Writing a '1' to this bit will set the Data Buffer Empty Interrupt Enable bit, which enables the Data Buffer Empty interrupt.

Value	Description
0	The Data Buffer Empty interrupt is disabled.
1	The Data Buffer Empty interrupt is enabled.

Bit 0 – UNDERRUN Underrun Interrupt Enable
Writing a '0' to this bit has no effect.
Writing a '1' to this bit will set the Data Buffer Underrun Interrupt Enable bit, which enables the Data Buffer Underrun interrupt.

Value	Description
0	The Data Buffer Underrun interrupt is disabled.
1	The Data Buffer Underrun interrupt is enabled.

Downloaded from Arrow.com.

35.8.6 Interrupt Flag Status and Clear

Name: INTFLAG
Offset: 0x06
Reset: 0x00
Property: PAC Write-Protection

Bit	7	6	5	4	3	2	1	0
						SYNCRDY	EMPTY	UNDERRUN
Access						R/W	R/W	R/W
Reset						0	0	0

Bit 2 – SYNCRDY Synchronization Ready Interrupt Enable
Writing a '0' to this bit has no effect.
Writing a '1' to this bit will clear the Synchronization Ready Interrupt Enable bit, which disables the Synchronization Ready interrupt.

Value	Description
0	The Synchronization Ready interrupt is disabled.
1	The Synchronization Ready interrupt is enabled.

Bit 1 – EMPTY Data Buffer Empty
This flag is cleared by writing a '1' to it or by writing new data to DATABUF.
This flag is set when data is transferred from DATABUF to DATA, and the DAC is ready to receive new data in DATABUF, and will generate an interrupt request if INTENCLR/SET.EMPTY is one.
Writing a '0' to this bit has no effect.
Writing a '1' to this bit will clear the Data Buffer Empty interrupt flag.

Bit 0 – UNDERRUN Underrun
This flag is cleared by writing a '1' to it.
This flag is set when a start conversion event occurs when DATABUF is empty, and will generate an interrupt request if INTENCLR/SET.UNDERRUN is one.
Writing a '0' to this bit has no effect.
Writing a '1' to this bit will clear the Underrun interrupt flag.

Downloaded from Arrow.com.

35.8.7 Status

Name: STATUS
Offset: 0x07
Reset: 0x00
Property: -

Bit	7	6	5	4	3	2	1	0
	SYNCBUSY							
Access	R							
Reset	0							

Bit 7 – SYNCBUSY Synchronization Busy Status
This bit is cleared when the synchronization of registers between the clock domains is complete.
This bit is set when the synchronization of registers between clock domains is started.

Downloaded from Arrow.com.

35.8.8 Data DAC

Name: DATA
Offset: 0x08
Reset: 0x0000
Property: PAC Write-Protection

Bit	15	14	13	12	11	10	9	8
	DATA[15:8]							
Access	W	W	W	W	W	W	W	W
Reset	0	0	0	0	0	0	0	0

Bit	7	6	5	4	3	2	1	0
	DATA[7:0]							
Access	W	W	W	W	W	W	W	W
Reset	0	0	0	0	0	0	0	0

Bits 15:0 – DATA[15:0] Data value to be converted
DATA register contains the 10-bit value that is converted to a voltage by the DAC. The adjustment of these 10 bits within the 16-bit register is controlled by CTRLB.LEFTADJ.

Table 35-1. Valid Data Bits

CTRLB.LEFTADJ	DATA	Description
0	DATA[9:0]	Right adjusted, 10-bits
1	DATA[15:6]	Left adjusted, 10-bits

Downloaded from Arrow.com.

35.8.9 Data Buffer

Name: DATABUF
Offset: 0x0C
Reset: 0x0000
Property: Write-Synchronized

Bit	15	14	13	12	11	10	9	8
	DATABUF[15:8]							
Access	W	W	W	W	W	W	W	W
Reset	0	0	0	0	0	0	0	0

Bit	7	6	5	4	3	2	1	0
	DATABUF[7:0]							
Access	W	W	W	W	W	W	W	W
Reset	0	0	0	0	0	0	0	0

Bits 15:0 – DATABUF[15:0] Data Buffer
DATABUF contains the value to be transferred into DATA register.

Downloaded from Arrow.com.

36. Peripheral Touch Controller (PTC)

36.1 Overview

The Peripheral Touch Controller (PTC) acquires signals in order to detect a touch on the capacitive sensors. The external capacitive touch sensor is typically formed on a PCB, and the sensor electrodes are connected to the analog front end of the PTC through the I/O pins in the device. The PTC supports both self- and mutual-capacitance sensors.

In the mutual-capacitance mode, sensing is done using capacitive touch matrices in various X-Y configurations, including indium tin oxide (ITO) sensor grids. The PTC requires one pin per X-line and one pin per Y-line.

In the self-capacitance mode, the PTC requires only one pin (Y-line) for each touch sensor.

The number of available pins and the assignment of X- and Y-lines is depending on both package type and device configuration. Refer to the Configuration Summary and I/O Multiplexing table for details.

Related Links

7. I/O Multiplexing and Considerations
2. Configuration Summary

36.2 Features

- Low-power, high-sensitivity, environmentally robust capacitive touch buttons, sliders, and wheels
- Supports wake-up on touch from Standby Sleep mode
- Supports mutual capacitance and self-capacitance sensing
  - 6/10/16 buttons in self-capacitance mode, for 32-/48-/64- pins respectively
  - 60/120/256 buttons in mutual-capacitance mode, for 32-/48-/64- pins respectively
  - Mix-and-match mutual-and self-capacitance sensors
- One pin per electrode – no external components
- Load compensating charge sensing
  - Parasitic capacitance compensation and adjustable gain for superior sensitivity
- Zero drift over the temperature and V_{DD} range
  - Auto calibration and recalibration of sensors
- Single-shot charge measurement
- Hardware noise filtering and noise signal desynchronization for high conducted immunity
- Selectable channel change delay allows choosing the settling time on a new channel, as required
- Acquisition-start triggered by command or through auto-triggering feature
- Low CPU utilization through interrupt on acquisition-complete

Related Links

7. I/O Multiplexing and Considerations
2. Configuration Summary

Downloaded from Arrow.com.

36.3 Block Diagram

Figure 36-1. PTC Block Diagram Mutual-Capacitance

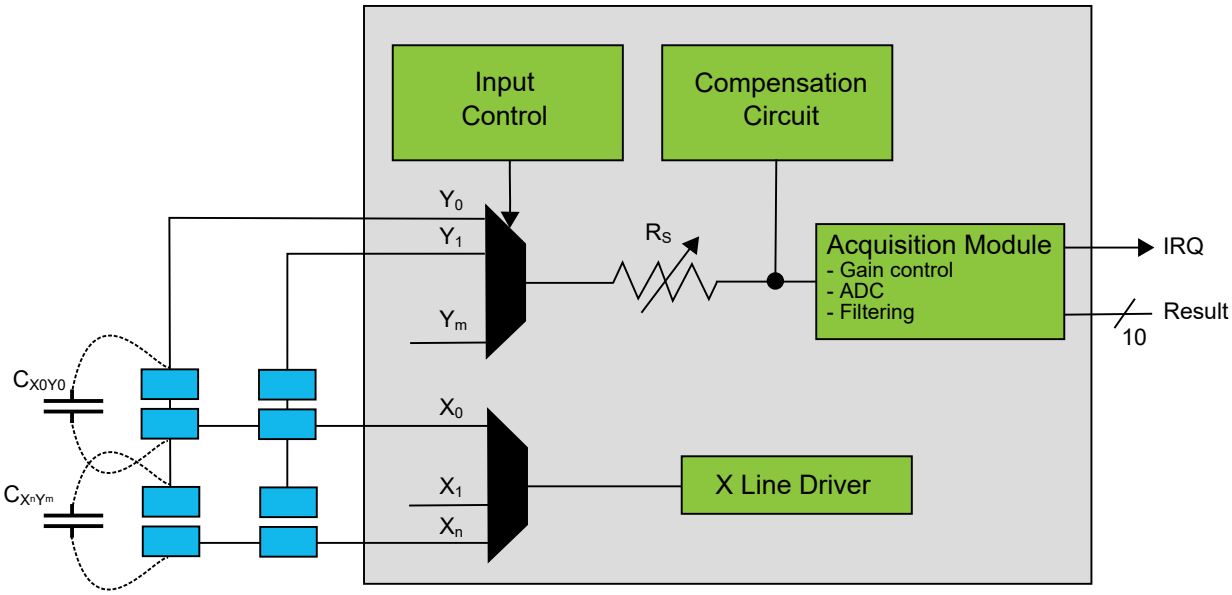

Note: For SAM D21 the R_S = 0, 20, 50, 100 KΩ.

Figure 36-2. PTC Block Diagram Self-Capacitance

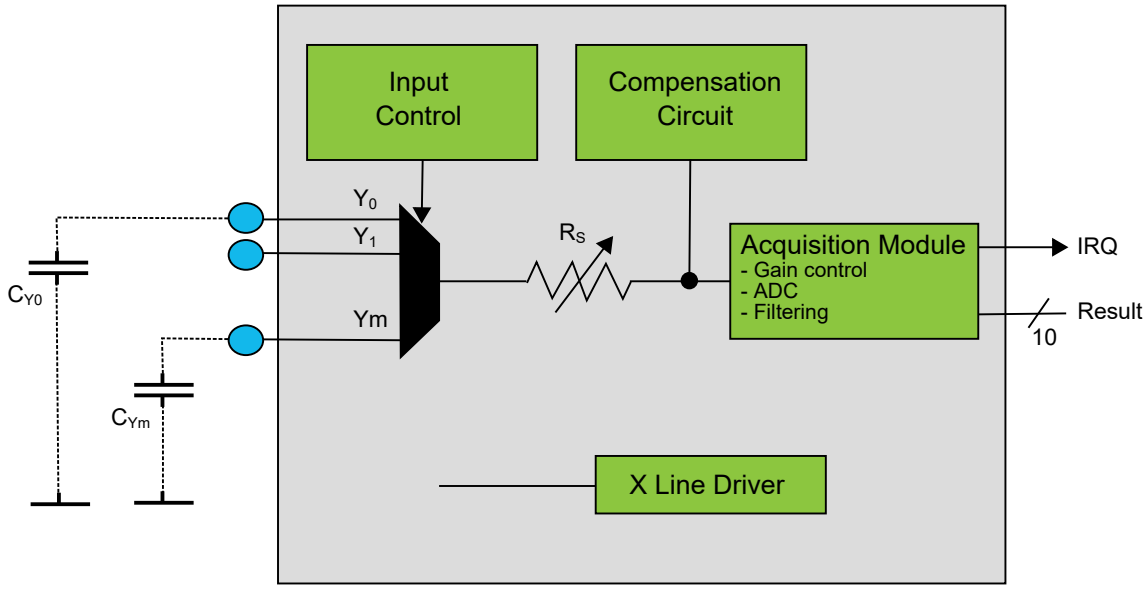

Note: For SAM D21 the RS = 0, 20, 50, 100 KΩ.

Downloaded from Arrow.com.

36.4 Signal Description

Table 36-1. Signal Description for PTC

Name	Type	Description
Y[m:0]	Analog	Y-line (Input/Output)
X[n:0]	Digital	X-line (Output)

Note: The number of X- and Y-lines are device dependent. Refer to *Configuration Summary* for details.

Refer to *I/O Multiplexing and Considerations* for details on the pin mapping for this peripheral. One signal can be mapped on several pins.

Related Links

7. I/O Multiplexing and Considerations
2. Configuration Summary

36.5 System Dependencies

In order to use this Peripheral, configure the other components of the system as described in the following sections.

36.5.1 I/O Lines

The I/O lines used for analog X-lines and Y-lines must be connected to external capacitive touch sensor electrodes. External components are not required for normal operation. However, to improve the EMC performance, a series resistor of 1 kΩ or more can be used on X-lines and Y-lines.

36.5.1.1 Mutual-Capacitance Sensor Arrangement

A mutual-capacitance sensor is formed between two I/O lines - an X electrode for transmitting and Y electrode for sensing. The mutual capacitance between the X and Y electrode is measured by the Peripheral Touch Controller.

Figure 36-3. Mutual Capacitance Sensor Arrangement

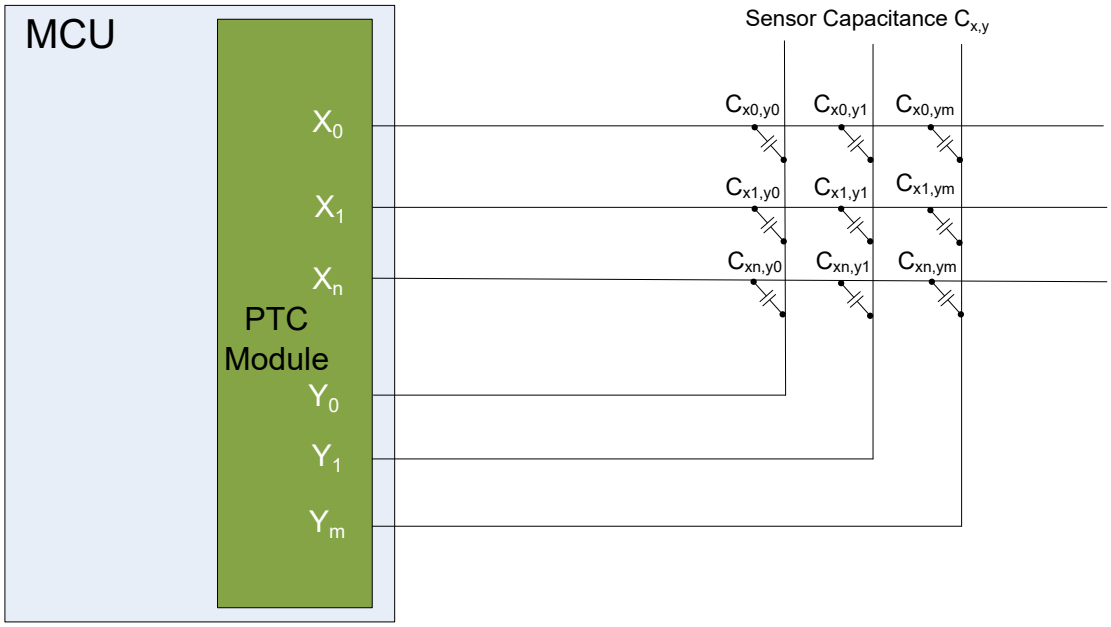

36.5.1.2 Self-Capacitance Sensor Arrangement

A self-capacitance sensor is connected to a single pin on the Peripheral Touch Controller through the Y electrode for sensing the signal. The sense electrode capacitance is measured by the Peripheral Touch Controller.

Downloaded from Arrow.com.

Figure 36-4. Self-Capacitance Sensor Arrangement

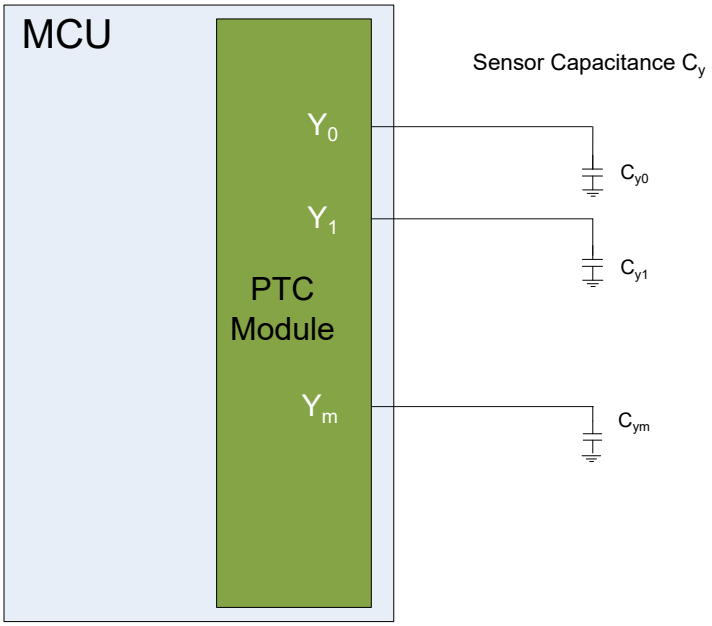

For more information about designing the touch sensor, refer to Buttons, Sliders and Wheels Touch Sensor Design Guide.

36.5.2 Clocks

The PTC is clocked by the GCLK_PTC clock. The PTC operates from an asynchronous clock source and the operation is independent of the main system clock and its derivative clocks, such as the peripheral bus clock (CLK_APB). A number of clock sources can be selected as the source for the asynchronous GCLK_PTC. The clock source is selected by configuring the Generic Clock Selection ID in the Generic Clock Control register. For more information about selecting the clock sources, refer to *GCLK - Generic Clock Controller*.

The selected clock must be enabled in the Power Manager, before it can be used by the PTC. By default these clocks are disabled. The frequency range of GCLK_PTC is 400kHz to 4MHz.

Related Links

15. GCLK - Generic Clock Controller
16. PM – Power Manager

36.6 Functional Description

In order to access the PTC, the user must use the Atmel Start QTouch® Configurator to configure and link the QTouch Library firmware with the application software. QTouch Library can be used to implement buttons, sliders, and wheels in a variety of combinations on a single interface.

Figure 36-5. QTouch Library Usage

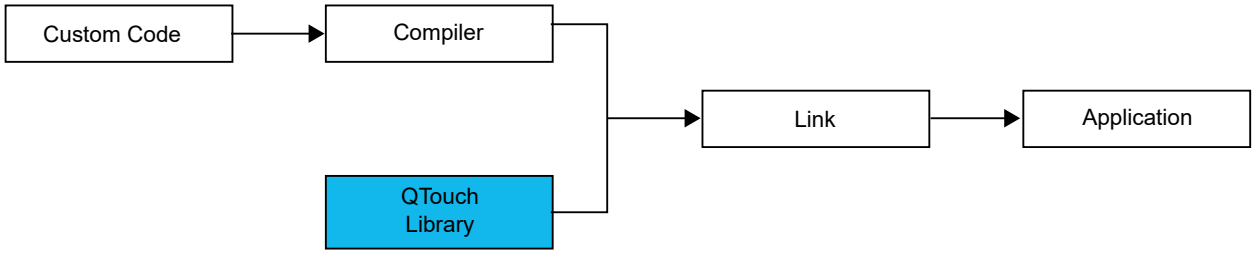

For more information about QTouch Library, refer to the QTouch Library Peripheral Touch Controller User Guide.

Downloaded from Arrow.com.

37. Electrical Characteristics at 85°C

37.1 Disclaimer

All typical values are measured at T = 25°C unless otherwise specified. All minimum and maximum values are valid across operating temperature and voltage unless otherwise specified.

37.2 Thermal Considerations

Related Links

37.2.2 Junction Temperature

37.2.1 Thermal Resistance Data

The following Table summarizes the thermal resistance data depending on the package.

Table 37-1. Thermal Resistance Data

Package Type	θ_{JA}	θ_{JC}
32-pin TQFP	64.7°C/W	23.1°C/W
48-pin TQFP	63.6°C/W	12.2°C/W
64-pin TQFP	60.9°C/W	12.2°C/W
32-pin VQFN	40.9°C/W	15.2°C/W
48-pin VQFN	32.0°C/W	10.9°C/W
64-pin VQFN (TMB)	32.5°C/W	10.7°C/W
64-Lead VQFN (5LX)	23.9°C/W	8.9°C/W
35-ball WLCSP	41.8°C/W	2.26°C/W
45-ball WLCSP	43.97°C/W	2.91°C/W
64-pin UFBGA	53°C/W	4.74°C/W

37.2.2 Junction Temperature

The average chip-junction temperature, T_J, in °C can be obtained from the following:

1. $T_J = T_A + (P_D \times \theta_{JA})$
2. $T_J = T_A + (P_D \times (\theta_{HEATSINK} + \theta_{JC}))$

where:

- θ_{JA} = Package thermal resistance, Junction-to-ambient (°C/W), see Thermal Resistance Data
- θ_{JC} = Package thermal resistance, Junction-to-case thermal resistance (°C/W), see Thermal Resistance Data
- $\theta_{HEATSINK}$ = Thermal resistance (°C/W) specification of the external cooling device
- P_D = Device power consumption (W)
- T_A = Ambient temperature (°C)

From the first equation, the user can derive the estimated lifetime of the chip and decide if a cooling device is necessary or not. If a cooling device has to be fitted on the chip, the second equation should be used to compute the resulting average chip-junction temperature T_J in °C.

Related Links

37.2 Thermal Considerations

Downloaded from Arrow.com.

37.3 Absolute Maximum Ratings

Stresses beyond those listed in this section may cause permanent damage to the device. This is a stress rating only and functional operation of the device at these or other conditions beyond those indicated in the operational sections of this specification is not implied. Exposure to absolute maximum rating conditions for extended periods may affect device reliability.

Table 37-2. Absolute Maximum Ratings

Symbol	Description	Min.	Max.	Units
V_{DD}	Power supply voltage	0	3.8	V
I_{VDD}	Current into a V_{DD} pin	-	92(1)	mA
I_{GND}	Current out of a GND pin	-	130(1)	mA
V_{PIN}	Pin voltage with respect to GND and V_{DD}	GND-0.6V	V_{DD}+0.6V	V
$T_{storage}$	Storage temperature	-60	150	°C

1. Maximum source current is 46mA and maximum sink current is 65mA per cluster. A cluster is a group of GPIOs as shown in the table below. Also note that each VDD/GND pair is connected to two clusters so current consumption through the pair will be a sum of the clusters source/sink currents.

⚠ CAUTION This device is sensitive to electrostatic discharges (ESD). Improper handling may lead to permanent performance degradation or malfunctioning.
Handle the device following best practice ESD protection rules: Be aware that the human body can accumulate charges large enough to impair functionality or destroy the device.

⚠ CAUTION In debugger cold-plugging mode, NVM erase operations are not protected by the BOD33 and BOD12. NVM erase operation at supply voltages below specified minimum can cause corruption of NVM areas that are mandatory for correct device behavior.

Related Links

7.2.4 GPIO Clusters
7.2.4 GPIO Clusters

37.4 General Operating Ratings

The device must operate within the ratings in order for all other electrical characteristics and typical characteristics of the device to be valid.

Table 37-3. General Operating Conditions

Symbol	Parameter	Condition	Min.	Typ.	Max.	Units
V_{DD}	Power supply voltage		1.62(1)	3.3	3.63	V
V_{DDANA}	Analog supply voltage		1.62(1)	3.3	3.63	V
T_A	Temperature range		-40	25	85	°C
T_J	Junction temperature		-	-	100	°C

1. With BOD33 disabled. If the BOD33 is enabled, check Table 37-21.

Downloaded from Arrow.com.

37.5 Supply Characteristics

The following characteristics are applicable to the operating temperature range: T_A = -40°C to 85°C, unless otherwise specified and are valid for a junction temperature up to T_J = 100°C. Refer to *Power Supply and Start-Up Considerations*.

Table 37-4. Supply Characteristics

Symbol	Conditions	Voltage		
		Min.	Max.	Units
V_{DDIO} V_{DDIN} V_{DDANA}	Full Voltage Range	1.62	3.63	V

Table 37-5. Supply Rise Rates

Symbol	Parameter	Rise Rate	Units
		Max.	
V_{DDIO} V_{DDIN} V_{DDANA}	DC supply peripheral I/Os, internal regulator and analog supply voltage	0.1	V/µs

Related Links

8. Power Supply and Start-Up Considerations

37.6 Maximum Clock Frequencies

Table 37-6. Maximum GCLK Generator Output Frequencies

Symbol	Description	Conditions	Max.	Units
$f_{GCLKGEN0}$ / f_{GCLK_MAIN}	GCLK Generator Output Frequency	Undivided	96	MHz
$f_{GCLKGEN1}$ $f_{GCLKGEN2}$ $f_{GCLKGEN3}$ $f_{GCLKGEN4}$ $f_{GCLKGEN5}$ $f_{GCLKGEN6}$ $f_{GCLKGEN7}$ $f_{GCLKGEN8}$		Divided	48	MHz

Table 37-7. Maximum Peripheral Clock Frequencies

Symbol	Description	Max.	Units
f_{CPU}	CPU clock frequency	48	MHz
f_{AHB}	AHB clock frequency	48	MHz
f_{APBA}	APBA clock frequency	48	MHz
f_{APBB}	APBB clock frequency	48	MHz

Downloaded from Arrow.com.

.....continued

Symbol	Description	Max.	Units
f_{APBC}	APBC clock frequency	48	MHz
$f_{GCLK_DFLL48M_REF}$	DFLL48M Reference clock frequency	33	KHz
f_{GCLK_DPLL}	FDPLL96M Reference clock frequency	2	MHz
$f_{GCLK_DPLL_32K}$	FDPLL96M 32k Reference clock frequency	32	KHz
f_{GCLK_WDT}	WDT input clock frequency	48	MHz
f_{GCLK_RTC}	RTC input clock frequency	48	MHz
f_{GCLK_EIC}	EIC input clock frequency	48	MHz
f_{GCLK_USB}	USB input clock frequency	48	MHz
$f_{GCLK_EVSYS_CHANNEL_0}$	EVSYS channel 0 input clock frequency	48	MHz
$f_{GCLK_EVSYS_CHANNEL_1}$	EVSYS channel 1 input clock frequency	48	MHz
$f_{GCLK_EVSYS_CHANNEL_2}$	EVSYS channel 2 input clock frequency	48	MHz
$f_{GCLK_EVSYS_CHANNEL_3}$	EVSYS channel 3 input clock frequency	48	MHz
$f_{GCLK_EVSYS_CHANNEL_4}$	EVSYS channel 4 input clock frequency	48	MHz
$f_{GCLK_EVSYS_CHANNEL_5}$	EVSYS channel 5 input clock frequency	48	MHz
$f_{GCLK_EVSYS_CHANNEL_6}$	EVSYS channel 6 input clock frequency	48	MHz
$f_{GCLK_EVSYS_CHANNEL_7}$	EVSYS channel 7 input clock frequency	48	MHz
$f_{GCLK_EVSYS_CHANNEL_8}$	EVSYS channel 8 input clock frequency	48	MHz
$f_{GCLK_EVSYS_CHANNEL_9}$	EVSYS channel 9 input clock frequency	48	MHz
$f_{GCLK_EVSYS_CHANNEL_10}$	EVSYS channel 10 input clock frequency	48	MHz
$f_{GCLK_EVSYS_CHANNEL_11}$	EVSYS channel 11 input clock frequency	48	MHz
$f_{GCLK_SERCOMx_SLOW}$	Common SERCOM slow input clock frequency	48	MHz
$f_{GCLK_SERCOM0_CORE}$	SERCOM0 input clock frequency	48	MHz
$f_{GCLK_SERCOM1_CORE}$	SERCOM1 input clock frequency	48	MHz
$f_{GCLK_SERCOM2_CORE}$	SERCOM2 input clock frequency	48	MHz
$f_{GCLK_SERCOM3_CORE}$	SERCOM3 input clock frequency	48	MHz
$f_{GCLK_SERCOM4_CORE}$	SERCOM4 input clock frequency	48	MHz
$f_{GCLK_SERCOM5_CORE}$	SERCOM5 input clock frequency	48	MHz
f_{GCLK_TCC0}, f_{GCLK_TCC1}	TCC0,TCC1 input clock frequency	96	MHz
f_{GCLK_TCC2}, f_{GCLK_TCC3},f_{GCLK_TC3}	TCC2, TCC3, TC3 input clock frequency	96	MHz
$f_{GCLK_TC4, GCLK_TC5}$	TC4,TC5 input clock frequency	48	MHz
$f_{GCLK_TC6, GCLK_TC7}$	TC6,TC7 input clock frequency	48	MHz
f_{GCLK_ADC}	ADC input clock frequency	48	MHz
$f_{GCLK_AC_DIG}$	AC digital input clock frequency	48	MHz
$f_{GCLK_AC_ANA}$	AC analog input clock frequency	64	KHz
$f_{GCLK_AC1_DIG}$	AC1 digital input clock frequency	48	MHz

© 2021 Microchip Technology Inc. and its subsidiaries

Downloaded from Arrow.com.

.....continued			
Symbol	**Description**	**Max.**	**Units**
$f_{GCLK_AC1_ANA}$	AC1 analog input clock frequency	64	KHz
f_{GCLK_DAC}	DAC input clock frequency	48	MHz
f_{GCLK_PTC}	PTC input clock frequency	48	MHz
$f_{GCLK_I2S_0}$	I2S serializer 0 input clock frequency	13	MHz
$f_{GCLK_I2S_1}$	I2S serializer 1 input clock frequency	13	MHz

37.7 Power Consumption

The values in this section are measured values of power consumption under the following conditions, except where noted:

- Operating conditions
  - V_{VDDIN} = 3.3 V
  - VDDIN = 1.8V, CPU is running on Flash with three wait states
- Wake up time from sleep mode is measured from the edge of the wakeup signal to the execution of the first instruction fetched in flash.
- Oscillators
  - XOSC (crystal oscillator) stopped
  - XOSC32K (32 kHz crystal oscillator) running with external 32kHz crystal
  - DFLL48M using XOSC32K as reference and running at 48 MHz
- Clocks
  - DFLL48M used as main clock source, except otherwise specified
  - CPU, AHB clocks undivided
  - APBA clock divided by 4
  - APBB and APBC bridges off
- The following AHB module clocks are running: NVMCTRL, APBA bridge
  - All other AHB clocks stopped
- The following peripheral clocks running: PM, SYSCTRL, RTC
  - All other peripheral clocks stopped
- I/Os are inactive with internal pull-up
- CPU is running on flash with 1 wait states
- Cache enabled
- BOD33 disabled

Downloaded from Arrow.com.

Table 37-8. Current Consumption (Device Variant A)

Mode	Conditions	T_A	Min.	Typ.	Max.	Units
ACTIVE	CPU running a While(1) algorithm	25°C	3.11	3.37	3.64	mA
		85°C	3.24	3.48	3.76	
	CPU running a While(1) algorithm V_{DDIN}=1.8V, CPU is running on Flash with 3 wait states	25°C	3.10	3.36	3.64	
		85°C	3.24	3.48	3.75	
	CPU running a While(1) algorithm, CPU is running on Flash with 3 wait states with GCLKIN as reference	25°C	60*freq + 74	60*freq + 136	62*freq + 196	µA (with freq in MHz)
		85°C	62*freq + 154	62*freq + 228	62*freq + 302	
	CPU running a Fibonacci algorithm	25°C	4.12	4.53	4.92	mA
		85°C	4.27	4.63	4.98	
	CPU running a Fibonacci algorithm V_{DDIN}=1.8V, CPU is running on flash with 3 wait states	25°C	4.12	4.53	4.92	
		85°C	4.27	4.63	4.98	
	CPU running a Fibonacci algorithm, CPU is running on Flash with 3 wait states with GCLKIN as reference	25°C	86*freq + 76	88*freq + 136	88*freq + 196	µA (with freq in MHz)
		85°C	88*freq + 156	88*freq + 230	88*freq + 302	
	CPU running a CoreMark algorithm	25°C	5.78	6.32	6.80	mA
		85°C	5.93	6.47	7.00	
	CPU running a CoreMark algorithm V_{DDIN}=1.8V, CPU is running on flash with 3 wait states	25°C	5.17	5.60	5.96	
		85°C	5.35	5.73	6.10	
	CPU running a CoreMark algorithm, CPU is running on Flash with 3 wait states with GCLKIN as reference	25°C	106*freq + 78	106*freq + 136	108*freq + 196	µA (with freq in MHz)
		85°C	106*freq + 154	108*freq + 232	108*freq + 310	
IDLE0	Default operating conditions	25°C	1.89	2.04	2.20	mA
		85°C	1.98	2.14	2.33	
IDLE1	Default operating conditions	25°C	1.34	1.46	1.58	
		85°C	1.41	1.55	1.71	
IDLE2	Default operating conditions	25°C	1.07	1.17	1.28	
		85°C	1.13	1.27	1.40	

Downloaded from Arrow.com.

.....continued						
Mode	Conditions	T_A	Min.	Typ.	Max.	Units
STANDBY	XOSC32K running RTC running at 1kHz	25°C	-	4.06	12.8	µA
		85°C	-	55.2	100	
	XOSC32K and RTC stopped	25°C	-	2.70	12.2	
		85°C	-	53.3	100	

Table 37-9. Current Consumption (Device Variant B and L With Silicon Revision E)

Mode	Conditions	T_A	V_{CC}	Typ.	Max.	Units
ACTIVE	CPU running a While 1 algorithm	25°C	3.3V	3.7	3.9	mA
		85°C	3.3V	3.8	4	
	CPU running a While 1 algorithm	25°C	1.8V	3.7	3.9	
		85°C	1,8V	3.8	4	
	CPU running a While 1 algorithm, with GCLKIN as reference	25°C	3.3V	72*Freq+107	76*Freq+111	µA (with freq in MHz)
		85°C	3.3V	72*Freq+198	76*Freq+210	
	CPU running a Fibonacci algorithm	25°C	3.3V	4.2	4.6	mA
		85°C	3.3V	4.3	4.7	
	CPU running a Fibonacci algorithm	25°C	1.8V	4.2	4.6	
		85°C	1.8V	4.3	4.7	
	CPU running a Fibonacci algorithm, with GCLKIN as reference	25°C	3.3V	83*Freq+107	87*Freq+111	µA(with freq in MHz)
		85°C	3.3V	84*Freq+199	87*Freq+216	
	CPU running a CoreMark algorithm	25°C	3.3V	5.2	5.7	
		85°C	3.3V	5.3	5.8	
	CPU running a CoreMark algorithm	25°C	1.8V	4.8	5.1	
		85°C	1.8V	4.9	5.2	
	CPU running a CoreMark algorithm, with GCLKIN as reference	25°C	3.3V	104*Freq+109	108*Freq+113	µA (with freq in MHz)
		85°C	3.3V	104*Freq+200	109*Freq+212	
IDLE0	Default operating conditions	25°C	3.3V	2.4	2.5	mA
		85°C	3.3V	2.5	2.6	
IDLE1	Default operating conditions	25°C	3.3V	1.8	1.9	
		85°C	3.3V	1.9	2.0	
IDLE2	Default operating conditions	25°C	3.3V	1.3	1.4	
		85°C	3.3V	1.4	1.5	
STANDBY	XOSC32K running, RTC running at 1kHz	25°C	3.3V	4	6.2	µA
		85°C	3.3V	54	100	
	XOSC32K and RTC stopped	25°C	3.3V	2.8	5.0	
		85°C	3.3V	52	98.8	

Downloaded from Arrow.com.

Table 37-10. Current Consumption (Device Variant B, C, D, L with Silicon Revision F and Silicon Revision G)

Mode	Conditions	T_A	V_{CC}	Typ.	Max.	Units
ACTIVE	CPU running a While 1 algorithm	25°C	3.3V	3.7	3.9	mA
		85°C	3.3V	3.8	4	
	CPU running a While 1 algorithm	25°C	1.8V	3.7	3.9	
		85°C	1,8V	3.8	4	
	CPU running a While 1 algorithm, with GCLKIN as reference	25°C	3.3V	72*Freq+107	76*Freq+111	µA (with freq in MHz)
		85°C	3.3V	72*Freq+198	76*Freq+210	
	CPU running a Fibonacci algorithm	25°C	3.3V	4.2	4.6	mA
		85°C	3.3V	4.3	4.7	
	CPU running a Fibonacci algorithm	25°C	1.8V	4.2	4.6	
		85°C	1.8V	4.3	4.7	
	CPU running a Fibonacci algorithm, with GCLKIN as reference	25°C	3.3V	83*Freq+107	87*Freq+111	µA(with freq in MHz)
		85°C	3.3V	84*Freq+199	87*Freq+216	
	CPU running a CoreMark algorithm	25°C	3.3V	5.2	5.7	
		85°C	3.3V	5.3	5.8	
	CPU running a CoreMark algorithm	25°C	1.8V	4.8	5.1	
		85°C	1.8V	4.9	5.2	
	CPU running a CoreMark algorithm, with GCLKIN as reference	25°C	3.3V	104*Freq+109	108*Freq+113	µA (with freq in MHz)
		85°C	3.3V	104*Freq+200	109*Freq+212	
IDLE0	Default operating conditions	25°C	3.3V	2.4	2.5	mA
		85°C	3.3V	2.5	2.6	
IDLE1	Default operating conditions	25°C	3.3V	1.8	1.9	
		85°C	3.3V	1.9	2	
IDLE2	Default operating conditions	25°C	3.3V	1.3	1.4	
		85°C	3.3V	1.4	1.5	
STANDBY	XOSC32K running, RTC running at 1kHz	25°C	3.3V	4.6	15.0	µA
		85°C	3.3V	43	102.0	
	XOSC32K and RTC stopped	25°C	3.3V	3.4	14.0	
		85°C	3.3V	42	100.0	

Downloaded from Arrow.com.

Table 37-11. Wake-up Time

Mode	Conditions	T_A	Min.	Typ.	Max.	Units
IDLE0	OSC8M used as main clock source, Cache disabled	25°C	-	4.0	-	µs
		85°C	-	4.0	-	
IDLE1	IOSC8M used as main clock source, Cache disabled	25°C	-	12.1	-	
		85°C	-	13.6	-	
IDLE2	IOSC8M used as main clock source, Cache disabled	25°C	-	13.0	-	
		85°C	-	14.5	-	
STANDBY	IOSC8M used as main clock source, Cache disabled	25°C	-	19.6	-	
		85°C	-	19.7	-	

Figure 37-1. Measurement Schematic

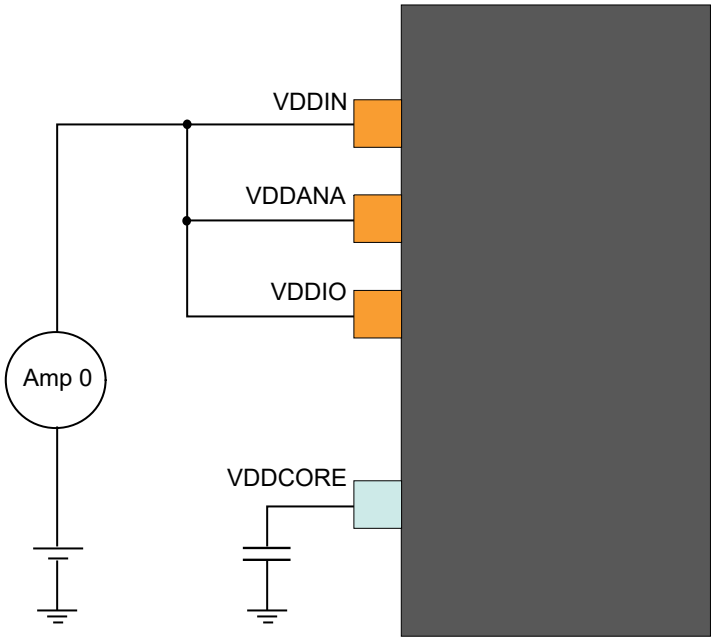

37.8 Peripheral Power Consumption

Since USB peripheral complies with the Universal Serial Bus (USB) v2.0 standard, USB peripheral power consumption is described a specific section

37.8.1 All peripheral except USB

Default conditions, except where noted:

- Operating conditions
  - V_{VDDIN} = 3.3 V
- Oscillators
  - XOSC (crystal oscillator) stopped
  - XOSC32K (32 kHz crystal oscillator) running with external 32kHz crystal

Downloaded from Arrow.com.

  - OSC8M at 8MHz
- Clocks
  - OSC8M used as main clock source
  - CPU, AHB and APBn clocks undivided
- The following AHB module clocks are running: NVMCTRL, HPB2 bridge, HPB1 bridge, HPB0 bridge
  - All other AHB clocks stopped
- The following peripheral clocks running: PM, SYSCTRL
  - All other peripheral clocks stopped
- I/Os are inactive with internal pull-up
- CPU in IDLE0 mode
- Cache enabled
- BOD33 disabled

In this default conditions, the power consumption $I_{default}$ is measured.

Operating mode for each peripheral in turn:

- Configure and enable the peripheral GCLK (When relevant, see conditions)
- Unmask the peripheral clock
- Enable the peripheral (when relevant)
- Set CPU in IDLE0 mode
- Measurement I_{periph}
- Wake-up CPU via EIC (async: level detection, filtering disabled)
- Disable the peripheral (when relevant)
- Mask the peripheral clock
- Disable the peripheral GCLK (when relevant, see conditions)

Each peripheral power consumption provided in table x.y is the value (I_{periph} - $I_{default}$), using the same measurement method as for global power consumption measurement

Table 37-12. Typical Peripheral Current Consumption

Peripheral	Conditions	Typ.	Units
RTC	f_{GCLK_RTC} = 32kHz, 32bit counter mode	7.4	µA
WDT	f_{GCLK_WDT}=32kHz, normal mode with EW	5.5	µA
ACx	Both f_{GCLK}=8MHz, Enable both COMP	31.3	µA
TCC2	f_{GCLK}=8MHz, Enable + COUNTER	95.5	µA
TCC1	f_{GCLK}=8MHz, Enable + COUNTER	167.5	µA
TCC0	f_{GCLK}=8MHz, Enable + COUNTER	180.3	µA
SERCOMx.I2CM(2)	f_{GCLK}=8MHz, Enable	69.7	µA
SERCOMx.I2CS	f_{GCLK}=8MHz, Enable	29.2	µA
SERCOMx.SPI	f_{GCLK}=8MHz, Enable	64.6	µA
SERCOMx.USART	f_{GCLK}=8MHz, Enable	65.5	µA
I2S(3)	$f_{GCLK_I2S_0}$=12.288MHz with source FDPLL with f_{FDPLL}=49,152MHz	26.4	µA
DMAC(4)	RAM to RAM transfer	399.5	µA

Downloaded from Arrow.com.

Notes:

1. All TCs from 4 to 7 share the same power consumption values.
2. All SERCOMs from 0 to 5 share the same power consumption values.
3. The value includes the power consumption of the FDPLL.
4. The value includes the power consumption of the R/W access to the RAM.

37.8.2 USB Peripheral Power Consumption

Default conditions, except where noted:

- Operating conditions
  - V_{VDDIN} = 3.3 V
- Oscillators
  - XOSC32K (32 kHz crystal oscillator) running with external 32kHz crystal in USB Host mode
- Clocks
  - USB Device mode: DFLL48M in USB recovery mode (Crystal less)
  - USB Host mode: DFLL48M in closed loop with XOSC32K (32 kHz crystal oscillator) running with external 32kHz crystal
  - CPU, AHB and APBn clocks undivided
- The following AHB module clocks are running: NVMCTRL, HPB2 bridge, HPB1 bridge, HPB0 bridge
  - All other AHB clocks stopped
- I/Os are inactive with internal pull-up
- CPU in IDLE0 mode
- Cache enabled
- BOD33 disabled

In this default conditions, the power consumption $I_{default}$ is measured.

Measurements do not include consumption of clock source (ex: DFLL48M or FDPLL96M) and CPU. However no CPU activity is required during all states (Suspend, IDLE, Data transfer).

Measurements have been done with an USB cable of 1.5m.

For USB Device mode, measurements include the maximum consumption (200µA) through pull-up resistor on the D+ line for USB attach. This value depends on USB Host characteristic.

Operating modes:

- Run the USB Device/Host states in regards of the Universal Serial Bus (USB) v2.0 standard.

USB power consumption is provided in the following tables.

Table 37-13. Typical USB Device Full Speed mode Current Consumption

USB Device state	Conditions	Typ.	Units
Suspend	GCLK_USB is off, using USB wakeup asynchronous interrupt. USB bus in suspend mode.	201	µA
Suspend	GCLK_USB is on. USB bus in suspend mode.	0.83	mA
IDLE	Start Of Frame is running. No packet transferred.	1.17	mA
Active OUT	Start Of Frame is running. Bulk OUT on 100% bandwidth.	2.17	mA
Active IN	Start Of Frame is running. Bulk IN on 100% bandwidth.	10.3	mA

Downloaded from Arrow.com.

Table 37-14. Typical USB Host Full Speed mode Current Consumption

USB Device state	Conditions	Typ.	Units
Wait connection	GCLK_USB is off, using USB wakeup asynchronous interrupt. USB bus not connected.	0.10	µA
Wait connection	GCLK_USB is on. USB bus not connected.	0.19	mA
Suspend	GCLK_USB is off, using USB wakeup asynchronous interrupt. USB bus in suspend mode.	201	µA
Suspend	GCLK_USB is on. USB bus in suspend mode.	0.83	mA
IDLE	Start Of Frame is running. No packet transferred.	1.17	mA
Active OUT	Start Of Frame is running. Bulk OUT on 100% bandwidth.	2.17	mA
Active IN	Start Of Frame is running. Bulk IN on 100% bandwidth.	10.3	mA

37.9 I/O Pin Characteristics

37.9.1 Normal I/O Pins

Table 37-15. Normal I/O Pins Characteristics

Symbol	Parameter	Conditions	Min.	Typ.	Max.	Units
R_{PULL}	Pull-up - Pull-down resistance	All pins except for PA24 and PA25	20	40	60	kΩ
V_{IL}	Input low-level voltage	V_{DD}=1.62V-2.7V	-	-	0.25*V_{DD}	V
		V_{DD}=2.7V-3.63V	-	-	0.3*V_{DD}	
V_{IH}	Input high-level voltage	V_{DD}=1.62V-2.7V	0.7*V_{DD}	-	-	
		V_{DD}=2.7V-3.63V	0.55*V_{DD}	-	-	
V_{OL}	Output low-level voltage	V_{DD}>1.6V, I_{OL} maxI	-	0.1*V_{DD}	0.2*V_{DD}	
V_{OH}	Output high-level voltage	V_{DD}>1.6V, I_{OH} maxII	0.8*V_{DD}	0.9*V_{DD}	-	

Downloaded from Arrow.com.

.....continued

Symbol	Parameter	Conditions	Min.	Typ.	Max.	Units
I_{OL}	Output low-level current	V_{DD}=1.62V-3V, PORT.PINCFG.DRVSTR=0	-	-	1	mA
		V_{DD}=3V-3.63V, PORT.PINCFG.DRVSTR=0	-	-	2.5	
		V_{DD}=1.62V-3V, PORT.PINCFG.DRVSTR=1	-	-	3	
		V_{DD}=3V-3.63V, PORT.PINCFG.DRVSTR=1	-	-	10	
I_{OH}	Output high-level current	V_{DD}=1.62V-3V, PORT.PINCFG.DRVSTR=0	-	-	0.70	
		V_{DD}=3V-3.63V, PORT.PINCFG.DRVSTR=0	-	-	2	
		V_{DD}=1.62V-3V, PORT.PINCFG.DRVSTR=1	-	-	2	
		V_{DD}=3V-3.63V, PORT.PINCFG.DRVSTR=1	-	-	7	
t_{RISE}	Rise time(1)	PORT.PINCFG.DRVSTR=0load = 5pF, V_{DD} = 3.3V	-	-	15	ns
		PORT.PINCFG.DRVSTR=1load = 20pF, V_{DD} = 3.3V	-	-	15	
t_{FALL}	Fall time(1)	PORT.PINCFG.DRVSTR=0load = 5pF, V_{DD} = 3.3V	-	-	15	ns
		PORT.PINCFG.DRVSTR=1load = 20pF, V_{DD} = 3.3V	-	-	15	
I_{LEAK}	Input leakage current	Pull-up resistors disabled	-1	+/-0.015	1	µA

Note: 1. These values are based on simulation. These values are not covered by test limits in production or characterization.

37.9.2 I2C Pins

Refer to *I/O Multiplexing and Considerations* to get the list of I^2C pins.

Table 37-16. I^2C Pins Characteristics in I^2C configuration

Symbol	Parameter	Condition	Min.	Typ.	Max.	Units
V_{IL}	Input low-level voltage	V_{DD}=1.62V-2.7V	-	-	0.25*V_{DD}	V
		V_{DD}=2.7V-3.63V	-	-	0.3*V_{DD}	
V_{IH}	Input high-level voltage	V_{DD}=1.62V-2.7V	0.7*V_{DD}	-	-	
		V_{DD}=2.7V-3.63V	0.55*V_{DD}	-	-	
V_{HYS}	Hysteresis of Schmitt trigger inputs		0.08*V_{DD}	-	-	
V_{OL}	Output low-level voltage	V_{DD}> 2.0V, I_{OL}=3mA	-	-	0.4	
		V_{DD}≤2.0V , I_{OL}=2mA	-	-	0.2*V_{DD}	

Downloaded from Arrow.com.

.....continued						
Symbol	Parameter	Condition	Min.	Typ.	Max.	Units
I_{OL}	Output low-level current	V_{OL} =0.4V Standard, Fast and HS Modes	3			mA
		V_{OL} =0.4V Fast Mode +	20	-	-	
		V_{OL} =0.6V	6	-	-	
f_{SCL}	SCL clock frequency		-	-	3.4	MHz

I^2C pins timing characteristics can be found in 37.16.3 SERCOM in I2C Mode Timing.

37.9.3 XOSC Pin

XOSC pins behave as normal pins when used as normal I/Os. Refer to table 37.9.1 Normal I/O Pins.

37.9.4 XOSC32 Pin

XOSC32 pins behave as normal pins when used as normal I/Os. Refer to table 37.9.1 Normal I/O Pins.

37.9.5 External Reset Pin

Reset pin has the same electrical characteristics as normal I/O pins. Refer to table 37.9.1 Normal I/O Pins.

37.10 Injection Current

Stresses beyond those listed in the table below may cause permanent damage to the device. This is a stress rating only and functional operation of the device at these or other conditions beyond those indicated in the operational sections of this specification is not implied. Exposure to absolute maximum rating conditions for extended periods may affect device reliability.

Table 37-17. Injection Current(1)

Symbol	Description	min	max	Unit
I_{inj1} (2)	IO pin injection current	-1	+1	mA
I_{inj2} (3)	IO pin injection current	-15	+15	mA
$I_{injtotal}$	Sum of IO pins injection current	-45	+45	mA

1. Injecting current may have an effect on the accuracy of Analog blocks
2. Conditions for V_{pin}: V_{pin} < GND-0.6V or 3.6V<V_{pin}≤4.2V.

   Conditions for V_{DD}: 3V<V_{DD}≤3.6V.

   If V_{pin} is lower than GND-0.6V, a current limiting resistor is required. The negative DC injection current limiting resistor *R* is calculated as $R = |(GND-0.6V - V_{pin})/I_{inj1}|$.

   If V_{pin} is greater than V_{DD}+0.6V, a current limiting resistor is required. The positive DC injection current limiting resistor *R* is calculated as $R = (V_{pin}-(V_{DD}+0.6))/I_{inj1}$.
3. Conditions for V_{pin}: V_{pin} < GND-0.6V or V_{pin}≤3.6V.

   Conditions for V_{DD}: V_{DD}≤3V.

   If V_{pin} is lower than GND-0.6V, a current limiting resistor is required. The negative DC injection current limiting resistor *R* is calculated as $R = |(GND-0.6V - V_{pin})/I_{inj2}|$.

   If V_{pin} is greater than V_{DD}+0.6V, a current limiting resistor is required. The positive DC injection current limiting resistor *R* is calculated as $R = (V_{pin}-(V_{DD}+0.6))/I_{inj2}$.

Downloaded from Arrow.com.

37.11 Analog Characteristics

37.11.1 Voltage Regulator Characteristics

Table 37-18. Voltage Regulator Electrical Characteristics

Symbol	Parameter	Conditions	Min.	Typ.	Max.	Units
V_{DDCORE}	DC calibrated output voltage	Voltage regulator normal mode	1.1	1.23	1.30	V

Note: Supplying any external components using the V_{DDCORE} pin is not allowed to assure the integrity of the core supply voltage.

Table 37-19. Decoupling requirements

Symbol	Parameter	Conditions	Min.	Typ.	Max.	Units
C_{IN}(1)	Input regulator capacitor, between V_{DDIN} and GND	Ceramic dielectric X7R	-	10	-	µF
			-	100	-	nF
C_{OUT}(2)	Output regulator capacitor, between V_{DDCORE} and GND	-	0.8	1	-	µF
ESR Cout	External Series Resistance of Cout		-	-	1	Ω

Note: 1. It is recommended to use ceramic X7R capacitor with low-series resistance. Refer to Figure 45-1 for a typical circuit connections of the decoupling capacitor.

Note: 2. It is recommended to use ceramic or solid tantalum capacitor with low ESR <= 1 ohms.

37.11.2 Power-on Reset (POR) Characteristics

Table 37-20. POR Characteristics

Symbol	Parameter	Conditions	Min.	Typ.	Max.	Units
V_{POT+}	Voltage threshold on V_{DD} rising	V_{DD} falls at 1V/ms or slower	1.27	1.45	1.58	V
V_{POT-}	Voltage threshold on V_{DD} falling		0.72	0.99	1.32	V

Downloaded from Arrow.com.

Figure 37-2. POR Operating Principle

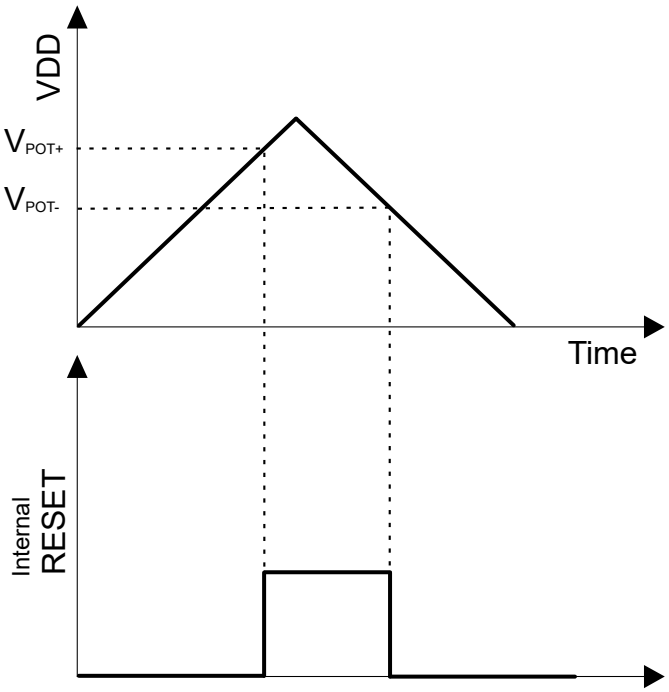

37.11.3 Brown-out Detectors Characteristics

37.11.3.1 BOD33

Figure 37-3. BOD33 Hysteresis OFF

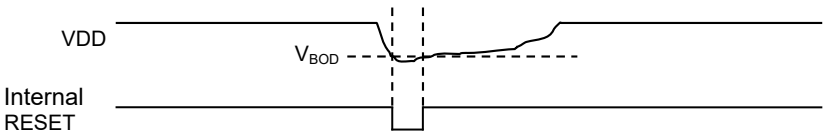

Figure 37-4. BOD33 Hysteresis ON

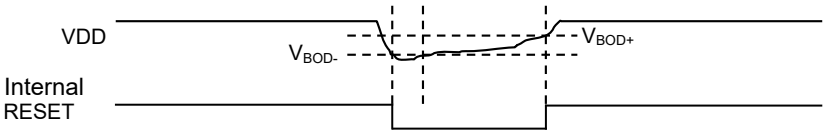

Downloaded from Arrow.com.

Table 37-21. BOD33 LEVEL Value (Silicon Revisions A, B, C, D, E, and F)

Symbol	BOD33.LEVEL	Conditions	Min.	Typ.	Max.	Units
V_{BOD+}	6	Hysteresis ON	-	1.715	1.745	V
	7		-	1.750	1.779	
	39		-	2.84	2.92	
	48		-	3.2	3.3	
V_{BOD-} or V_{BOD}	6	Hysteresis ON or Hysteresis OFF	1.62	1.64	1.67	
	7		1.64	1.675	1.71	
	39		2.72	2.77	2.81	
	48		3.0	3.07	3.2	

Note: See table *NVM User Row Mapping* for the BOD33 default value settings.

Table 37-22. BOD33 LEVEL Value (Silicon Revision G)

Symbol	BOD33.LEVEL	Conditions	Min.	Typ.	Max.	Units
VBOD+	6	Hysteresis ON	-	1.709	1.748	V
	7		-	1.747	1.795	
	39		-	2.872	2.950	
	48		-	3.201	3.340	
VBOD- or VBOD	6	Hysteresis ON or Hysteresis OFF	1.590	1.638	1.680	
	7		1.620	1.670	1.710	
	39		2.680	2.764	2.840	
	48		2.980	3.071	3.200	

Note: Refer to the NVM User Row Mapping for the BOD33 default value settings.

Table 37-23. BOD33 Characteristics

Symbol	Parameter	Conditions	Min.	Typ.	Max.	Units
	Step size, between adjacent values in BOD33.LEVEL	-	-	34	-	mV
V_{HYST}	V_{BOD+} - V_{BOD-}	Hysteresis ON	35	-	170	mV
t_{DET}	Detection time	Time with $V_{DDANA} < V_{TH}$ necessary to generate a reset signal	-	0.9(1)	-	µs
I_{BOD33}	Current consumption	Idle2,Continuous mode, VDD=3V	-	25	50	µA
		Idle2, Sampling mode, VDD=1.8V	-	0.034	1.62	
		STANDBY,Sample Mode, VDD=3.3V	-	0.132	1	
$t_{STARTUP}$	Startup time	-	-	2.2(1)	-	µs

Note: 1. These values are based on simulation and are not covered by test limits in production or characterization.

Downloaded from Arrow.com.

Related Links

10.3.1 NVM User Row Mapping

37.11.4 Analog-to-Digital (ADC) characteristics

Table 37-24. Operating Conditions

Symbol	Parameter	Conditions	Min.	Typ.	Max.	Units
RES	Resolution	-	8	-	12	bits
f_{CLK_ADC}	ADC Clock frequency	-	30	-	2100	kHz
	Sample rate(1)	Single shot	5	-	300	ksps
		Free running	5	-	350	ksps
	Sampling time(1)	-	250	-	-	ns
	Sampling time with DAC as input(2)	-	3	-	-	µs
	Sampling time with Temp sens as input(2)	-	10	-	-	µs
	Sampling time with Bandgap as input(2)	-	10	-	-	µs
	Conversion time(1)	1x Gain	6	-	-	cycles
V_{REF}	Voltage reference range (VREFA or VREFB)	-	1.0	-	V_{DDANA}-0.6	V
INT1V	Internal 1V reference (2,4)	-	-	1.0	-	V
INTVCC0	Internal ratiometric reference 0(2)	-	-	V_{DDANA}/1.48	-	V
INTVCC0 Voltage Error	Internal ratiometric reference 0(2) error	2.0V < V_{DDANA}<3.63V	-1.0	-	+1.0	%
INTVCC1	Internal ratiometric reference 1(2)	V_{DDANA}>2.0V	-	V_{DDANA}/2	-	V
INTVCC1 Voltage Error	Internal ratiometric reference 1(2) error	2.0V < V_{DDANA}<3.63V	-1.0	-	+1.0	%
	Conversion range(1)	Differential mode	-V_{REF}/ GAIN	-	+V_{REF}/GAIN	V
		Single-ended mode	0.0	-	+V_{REF}/GAIN	V
C_{SAMPLE}	Sampling capacitance(2)	-	-	3.5	-	pF
R_{SAMPLE}	Input channel source resistance(2)	-	-	-	3.5	kΩ
I_{DD}	DC supply current(1)	f_{CLK_ADC} = 2.1 MHz(3)	-	1.25	1.79	mA

Notes:

1. These values are based on characterization, and are not covered by test limits in production.
2. These values are based on simulation, and are not covered by test limits in production or characterization.
3. In this condition and for a sample rate of 350 ksps, 1 Conversion at gain 1x takes 6 clock cycles of the ADC clock.
4. It is the buffered internal reference of 1.0V derived from the internal 1.1V bandgap reference.

Downloaded from Arrow.com.

Table 37-25. Differential Mode (Device Variant A)

Symbol	Parameter	Conditions	Min.	Typ.	Max.	Units
ENOB	Effective Number Of Bits	With gain compensation	-	10.5	11.1	bits
TUE	Total Unadjusted Error	1x gain	1.5	4.3	15.0	LSB
INL	Integral Non Linearity	1x gain	1.0	1.3	4.5	LSB
DNL	Differential Non Linearity	1x gain	+/-0.3	+/-0.5	+/-0.95	LSB
GE	Gain Error	Ext. Ref 1x	-10.0	2.5	+10.0	mV
		V_{REF} = V_{DDANA}/1.48	-15.0	-1.5	+10.0	mV
		VREF = INT1V	-20.0	-5.0	+20.0	mV
	Gain Accuracy(5)	Ext. Ref. 0.5x	+/-0.1	+/-0.2	+/-0.45	%
		Ext. Ref. 2x to 16x	+/-0.05	+/-0.1	+/-0.11	%
OE	Offset Error	Ext. Ref. 1x	-5.0	-1.5	+5.0	mV
		V_{REF}=V_{DDANA}/1.48	-5.0	0.5	+5.0	mV
		VREF = INT1V	-5.0	3.0	+5.0	mV
SFDR	Spurious Free Dynamic Range	1x Gain F_{CLK_ADC} = 2.1 MHz F_{IN} = 40 kHz A_{IN} = 95% FSR	62.7	70.0	75.0	dB
SINAD	Signal-to-Noise and Distortion		54.1	65.0	68.5	dB
SNR	Signal-to-Noise Ratio		54.5	65.5	68.6	dB
THD	Total Harmonic Distortion		-77.0	-64.0	-63.0	dB
	Noise RMS	T = 25°C	0.6	1.0	1.6	mV

Table 37-26. Differential Mode (Device Variant B, C, D and L)

Symbol	Parameter	Conditions	Min.	Typ.	Max.	Units
ENOB	Effective Number Of Bits	With gain compensation	-	10.5	10.8	bits
TUE	Total Unadjusted Error	1x gain	1.5	2.7	10.0	LSB
INLI	Integral Non Linearity	1x gain	0.9	1.3	4.0	LSB
DNL	Differential Non Linearity	1x gain	+/-0.3	+/-0.5	+/-0.95	LSB
GE	Gain Error	Ext. Ref 1x	-10.0	1.3	+10.0	mV
		V_{REF} = V_{DDANA}/1.48	-20.0	-10.0	+10.0	mV
		VREF = INT1V	-20.0	-2.0	+20.0	mV
	Gain Accuracy(5)	Ext. Ref. 0.5x	+/-0.02	+/-0.05	+/-0.1	%
		Ext. Ref. 2x to 16x	+/-0.01	+/-0.03	+/-0.5	%
OE	Offset Error	Ext. Ref. 1x	-5.0	-1.0	+5.0	mV
		V_{REF} = V_{DDANA}/1.48	-5.0	-0.60	+5.0	mV
		VREF = INT1V	-5.0	-1.0	+5.0	mV

Downloaded from Arrow.com.

.....continued						
Symbol	**Parameter**	**Conditions**	**Min.**	**Typ.**	**Max.**	**Units**
SFDR	Spurious Free Dynamic Range	1x gain F_{CLK_ADC} = 2.1 MHz F_{IN} = 40 kHz A_{IN} = 95% FSR	65	71.3	77.0	dB
SINAD	Signal-to-Noise and Distortion		58	65	67	dB
SNR	Signal-to-Noise Ratio		60	66	68.6	dB
THD	Total Harmonic Distortion		-75.0	-71.0	-67.0	dB
	Noise RMS	T = 25°C	0.6	1.0	1.6	mV

Notes:

1. Maximum numbers are based on characterization and not tested in production, and valid for 5% to 95% of the input voltage range.
2. Dynamic parameter numbers are based on characterization and not tested in production.
3. Respect the input common mode voltage through the following equations (where VCM_IN is the Input channel common mode voltage):
   - i. If |VIN| > VREF/4
     - VCM_IN < 0.95*VDDANA + VREF/4 – 0.75V
     - VCM_IN > VREF/4 -0.05*VDDANA -0.1V
   - ii. If |VIN| < VREF/4
     - VCM_IN < 1.2*VDDANA - 0.75V
     - VCM_IN > 0.2*VDDANA - 0.1V
4. The ADC channels on pins PA08, PA09, PA10, PA11 are powered from the VDDIO power supply. The ADC performance of these pins will not be the same as all the other ADC channels on pins powered from the VDDANA power supply.
5. The gain accuracy represents the gain error expressed in percent. Gain accuracy (%) = (Gain Error in V x 100) / (2*Vref/GAIN)

Table 37-27. Single-Ended Mode (Device Variant A)

Symbol	Parameter	Conditions	Min.	Typ.	Max.	Units
ENOB	Effective Number of Bits	With gain compensation	-	9.5	9.8	Bits
TUE	Total Unadjusted Error	1x gain	-	10.5	14.0	LSB
INL	Integral Non-Linearity	1x gain	1.0	1.6	3.5	LSB
DNL	Differential Non-Linearity	1x gain	+/-0.5	+/-0.6	+/-0.95	LSB
GE	Gain Error	Ext. Ref. 1x	-5.0	0.7	+5.0	mV
	Gain Accuracy(4)	Ext. Ref. 0.5x	+/-0.2	+/-0.34	+/-0.4	%
		Ext. Ref. 2x to 16X	+/-0.01	+/-0.1	+/-0.2	%
OE	Offset Error	Ext. Ref. 1x	-5.0	1.5	+5.0	mV
SFDR	Spurious Free Dynamic Range	1x gain F_{CLK_ADC} = 2.1 MHz F_{IN} = 40 kHz A_{IN} = 95% FSR	63.1	65.0	67.0	dB
SINAD	Signal-to-Noise and Distortion		47.5	59.5	61.0	dB
SNR	Signal-to-Noise Ratio		48.0	60.0	64.0	dB
THD	Total Harmonic Distortion		-65.4	-63.0	-62.1	dB
	Noise RMS	T = 25°C	-	1.0	-	mV

Downloaded from Arrow.com.

Table 37-28. Single-Ended Mode (Device Variant B,C, D and L)

Symbol	Parameter	Conditions	Min.	Typ.	Max.	Units
ENOB	Effective Number of Bits	With gain compensation	-	9.7	10.1	Bits
TUE	Total Unadjusted Error	1x gain	-	7.9	15.0	LSB
INL	Integral Non-Linearity	1x gain	1.4	2.6	4.5	LSB
DNL	Differential Non-Linearity	1x gain	+/-0.6	+/-0.7	+/-0.95	LSB
GE	Gain Error	Ext. Ref. 1x	-5.0	0.6	+5.0	mV
	Gain Accuracy(4)	Ext. Ref. 0.5x	+/-0.2	+/-0.37	+/-0.55	%
		Ext. Ref. 2x to 16X	+/-0.01	+/-0.1	+/-0.2	%
OE	Offset Error	Ext. Ref. 1x	-5.0	0.6	+5.0	mV
SFDR	Spurious Free Dynamic Range	1x gain F_{CLK_ADC} = 2.1 MHz F_{IN} = 40 kHz A_{IN} = 95% FSR	63.0	68.0	71.0	dB
SINAD	Signal-to-Noise and Distortion		55.0	60.1	63.0	dB
SNR	Signal-to-Noise Ratio		54.0	61.0	64.0	dB
THD	Total Harmonic Distortion		-70.8	-68.0	-65.0	dB
	Noise RMS	T = 25°C	-	1.0	-	mV

Notes:

1. Maximum numbers are based on characterization and not tested in production, and for 5% to 95% of the input voltage range.
2. Respect the input common mode voltage through the following equations (where VCM_IN is the Input channel common mode voltage) for all VIN:
   - VCM_IN < 0.7*VDDANA + VREF/4 – 0.75V
   - VCM_IN > VREF/4 – 0.3*VDDANA - 0.1V
3. The ADC channels on pins PA08, PA09, PA10, PA11 are powered from the VDDIO power supply. The ADC performance of these pins will not be the same as all the other ADC channels on pins powered from the VDDANA power supply.
4. The gain accuracy represents the gain error expressed in percent. Gain accuracy (%) = (Gain Error in V x 100) / (Vref/GAIN)

37.11.4.1 Performance with the Averaging Digital Feature

Averaging is a feature which increases the sample accuracy. ADC automatically computes an average value of multiple consecutive conversions. The numbers of samples to be averaged is specified by the Number-of-Samples-to-be-collected bit group in the Average Control register (AVGCTRL.SAMPLENUM[3:0]) and the averaged output is available in the Result register (RESULT).

Table 37-29. Averaging Feature (Device Variant A)

Average Number	Conditions	SNR (dB)	SINAD (dB)	SFDR (dB)	ENOB (bits)
1	In differential mode, 1x gain, V_{DDANA}=3.0V, V_{REF}=1.0V, 350kSps at 25°C	66.0	65.0	72.8	9.75
8		67.6	65.8	75.1	10.62
32		69.7	67.1	75.3	10.85
128		70.4	67.5	75.5	10.91

Downloaded from Arrow.com.

Table 37-30. Averaging Feature (Device Variant B,C, D and L)

Average Number	Conditions	SNR (dB)	SINAD (dB)	SFDR (dB)	ENOB (bits)
1	In differential mode, 1x gain, V_{DDANA}=3.0V, V_{REF}=1.0V, 350kSps at 25°C	66.0	65.0	72.8	10.5
8		67.6	65.8	75.1	10.62
32		69.7	67.1	75.3	10.85
128		70.4	67.5	75.5	10.91

37.11.4.2 Performance with the hardware offset and gain correction

Inherent gain and offset errors affect the absolute accuracy of the ADC. The offset error cancellation is handled by the Offset Correction register (OFFSETCORR) and the gain error cancellation, by the Gain Correction register (GAINCORR). The offset and gain correction value is subtracted from the converted data before writing the Result register (RESULT).

Table 37-31. Offset and Gain correction feature

Gain Factor	Conditions	Offset Error (mV)	Gain Error (mV)	Total Unadjusted Error (LSB)
0.5x	In differential mode, 1x gain, V_{DDANA}=3.0V, V_{REF}=1.0V, 350kSps at 25°C	0.25	1.0	2.4
1x		0.20	0.10	1.5
2x		0.15	-0.15	2.7
8x		-0.05	0.05	3.2
16x		0.10	-0.05	6.1

37.11.4.3 Inputs and Sample and Hold Acquisition Times

The analog voltage source must be able to charge the sample and hold (S/H) capacitor in the ADC in order to achieve maximum accuracy. Seen externally, the ADC input consists of a resistor (R_{SAMPLE}) and a capacitor (C_{SAMPLE}). In addition, the source resistance (R_{SOURCE}) must be taken into account when calculating the required sample and hold time. The next figure shows the ADC input channel equivalent circuit.

Figure 37-5. ADC Input

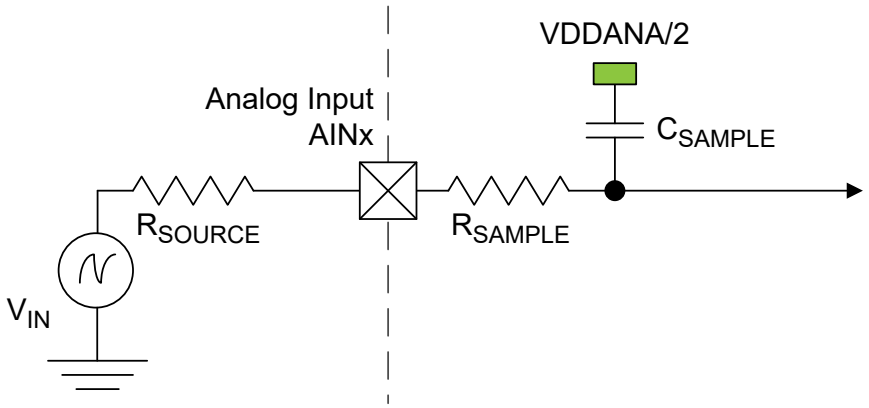

To achieve n bits of accuracy, the C_{SAMPLE} capacitor must be charged at least to a voltage of

$$V_{\mathrm{CSAMPLE}} \geq V_{\mathrm{IN}} \times \left(1 + -2^{-(n+1)}\right)$$

The minimum sampling time $t_{\mathrm{SAMPLEHOLD}}$ for a given R_{SOURCE}can be found using this formula:

$$t_{\mathrm{SAMPLEHOLD}} \geq (R_{\mathrm{SAMPLE}} + R_{\mathrm{SOURCE}}) \times (C_{\mathrm{SAMPLE}}) \times (n+1) \times \ln(2)$$

Downloaded from Arrow.com.

for a 12 bits accuracy: $t_{SAMPLEHOLD} \geq (R_{SAMPLE} + R_{SOURCE}) \times (C_{SAMPLE}) \times 9.02$

37.11.5 Digital to Analog Converter (DAC) Characteristics

Table 37-32. Operating Conditions(1)

Symbol	Parameter	Conditions	Min.	Typ.	Max.	Units
V_{DDANA}	Analog supply voltage	-	1.62	-	3.63	V
AV_{REF}	External reference voltage	-	1.0	-	V_{DDANA}-0.6	V
	INT1V(3)	-	-	1	-	V
	VDDANA	-	-	V_{DDANA}	-	V
	Linear output voltage range	-	0.05	-	V_{DDANA}-0.05	V
	Minimum resistive load	-	5	-	-	kΩ
	Maximum capacitance load	-	-	-	100	pF
I_{DD}	DC supply current(2)	Voltage pump disabled	-	160	230	µA

Notes:

1. These values are based on specifications otherwise noted.
2. These values are based on characterization, and are not covered by test limits in production.
3. It is the buffered internal reference of 1.0V derived from the internal 1.1V bandgap reference.

Table 37-33. Clock and Timing(1)

Symbol	Parameter	Conditions		Min.	Typ.	Max.	Units
	Conversion rate	C_{load} = 100 pF R_{load} > 5 kΩ	Normal mode	-	-	350	ksps
			For Δ_{DATA} = +/-1	-	-	1000	
	Startup time	V_{DDNA} > 2.6V		-	-	2.85	µs
		V_{DDNA} < 2.6V		-	-	10	µs

Note:

1. These values are based on simulation, and are not covered by test limits in production or characterization.

Table 37-34. Accuracy Characteristics(1) (Device Variant A)

Symbol	Parameter	Conditions		Min.	Typ.	Max.	Units
RES	Input resolution	-		-	-	10	Bits
INL	Integral non-linearity	V_{REF} = Ext 1.0V	V_{DD} = 1.6V	0.75	1.1	2.5	LSB
			V_{DD} = 3.6V	0.6	1.2	1.5	
		V_{REF} = V_{DDANA}	V_{DD} = 1.6V	1.4	2.2	2.5	
			V_{DD} = 3.6V	0.9	1.4	1.5	
		V_{REF} = INT1V	V_{DD} = 1.6V	0.75	1.3	1.5	
			V_{DD} = 3.6V	0.8	1.2	1.5	

Downloaded from Arrow.com.

.....continued							
Symbol	**Parameter**	**Conditions**		**Min.**	**Typ.**	**Max.**	**Units**
DNL	Differential non-linearity	V_{REF} = Ext 1.0V	V_{DD} = 1.6V	+/-0.9	+/-1.2	+/-1.5	LSB
			V_{DD} = 3.6V	+/-0.9	+/-1.1	+/-1.2	
		V_{REF} = V_{DDANA}	V_{DD} = 1.6V	+/-1.1	+/-1.5	+/-1.7	
			V_{DD} = 3.6V	+/-1.0	+/-1.1	+/-1.2	
		V_{REF} = INT1V	V_{DD} = 1.6V	+/-1.1	+/-1.4	+/-1.5	
			V_{DD} = 3.6V	+/-1.0	+/-1.5	+/-1.6	
GE	Gain error	Ext. V_{REF}		+/-1.5	+/-5	+/-10	mV
OE	Offset error	Ext. V_{REF}		+/-2	+/-3	+/-6	mV

Table 37-35. Accuracy Characteristics(1) (Device Variant B,C, D and L)

Symbol	**Parameter**	**Conditions**		**Min.**	**Typ.**	**Max.**	**Units**
RES	Input resolution	-		-	-	10	Bits
INL	Integral non-linearity	V_{REF} = Ext 1.0V	V_{DD} = 1.6V	0.7	0.75	2	LSB
			V_{DD} = 3.6V	0.6	0.65	1.5	
		V_{REF} = V_{DDANA}	V_{DD} = 1.6V	0.6	0.85	2	
			V_{DD} = 3.6V	0.5	0.8	1.5	
		V_{REF} = INT1V	V_{DD} = 1.6V	0.5	0.75	1.5	
			V_{DD} = 3.6V	0.7	0.8	1.5	
DNL	Differential non-linearity	V_{REF} = Ext 1.0V	V_{DD} = 1.6V	+/-0.3	+/-0.4	+/-1.0	LSB
			V_{DD} = 3.6V	+/-0.25	+/-0.4	+/-0.75	
		V_{REF} = V_{DDANA}	V_{DD} = 1.6V	+/-0.4	+/-0.55	+/-1.5	
			V_{DD} = 3.6V	+/-0.2	+/-0.3	+/-0.75	
		V_{REF} = INT1V	V_{DD} = 1.6V	+/-0.5	+/-0.7	+/-1.5	
			V_{DD} = 3.6V	+/-0.4	+/-0.7	+/-1.5	
GE	Gain error	Ext. V_{REF}		+/-0.5	+/-5	+/-10	mV
OE	Offset error	Ext. V_{REF}		+/-2	+/-1.5	+/-8	mV

Note:

1. All values measured using a conversion rate of 35 ksps.

37.11.6 Analog Comparator Characteristics

Table 37-36. Electrical and Timing (Device Variant A)

Symbol	**Parameter**	**Conditions**	**Min.**	**Typ.**	**Max.**	**Units**
	Positive input voltage range	-	0	-	V_{DDANA}	V
	Negative input voltage range	-	0	-	V_{DDANA}	
	Offset	Hysteresis = 0, Fast mode	-15	0.0	+15	mV
		Hysteresis = 0, Low-power mode	-25	0.0	+25	mV

Downloaded from Arrow.com.

.....continued						
Symbol	**Parameter**	**Conditions**	**Min.**	**Typ.**	**Max.**	**Units**
	Hysteresis	Hysteresis = 1, Fast mode	20	50	80	mV
		Hysteresis = 1, Low-power mode	15	40	75	mV
	Propagation delay	Changes for V_{ACM} = V_{DDANA}/2 100 mV overdrive, Fast mode	-	60	116	ns
		Changes for V_{ACM} = V_{DDANA}/2 100 mV overdrive, Low-power mode	-	225	370	ns
$t_{STARTUP}$	Startup time	Enable to ready delay Fast mode	-	1	2	µs
		Enable to ready delay Low power mode	-	12	19	µs
V_{SCALE}	INL(3)	-	-1.4	0.75	+1.4	LSB
	DNL(3)	-	-0.9	0.25	+0.9	LSB
	Offset Error (1)(2)	-	-0.200	0.260	+0.920	LSB
	Gain Error (1)(2)	-	-0.89	0.215	0.89	LSB

Table 37-37. Electrical and Timing (Device Variant B,C, D and L)

Symbol	**Parameter**	**Conditions**	**Min.**	**Typ.**	**Max.**	**Units**
	Positive input voltage range	-	0	-	V_{DDANA}	V
	Negative input voltage range	-	0	-	V_{DDANA}	
	Offset	Hysteresis = 0, Fast mode	-15	0.0	+15	mV
		Hysteresis = 0, Low-power mode	-25	0.0	+25	mV
	Hysteresis	Hysteresis = 1, Fast mode	20	50	85	mV
		Hysteresis = 1, Low-power mode	15	40	75	mV
	Propagation delay	Changes for V_{ACM} = V_{DDANA}/2 100 mV overdrive, Fast mode	-	90	180	ns
		Changes for V_{ACM} = V_{DDANA}/2 100 mV overdrive, Low-power mode	-	282	520	ns
$t_{STARTUP}$	Startup time	Enable to ready delay ,Fast mode	-	1	2.6	µs
		Enable to ready delay , Low-power mode	-	14	22	µs
V_{SCALE}	INL(3)	-	-1.4	0.75	+1.4	LSB
	DNL(3)	-	-0.9	0.25	+0.9	LSB
	Offset Error (1)(2)	-	-0.200	0.260	+0.920	LSB
	Gain Error (1)(2)	-	-0.89	0.215	0.89	LSB

Notes:

1. According to the standard equation V(X) = V_{LSB}*(X+1); V_{LSB} = V_{DDANA}/64.
2. Data computed with the Best Fit method.
3. Data computed using histogram.

Downloaded from Arrow.com.

37.11.7 Bandgap and Internal 1.0V Reference Characteristics

Table 37-38. Bandgap and Internal 1.0V Reference Characteristics

Symbol	Parameter	Conditions	Min.	Typ.	Max.	Units
BANDGAP	Internal 1.1V Bandgap reference	After calibration at T = 25°C, over [-40°C, +85°C],V_{DD} = 3.3V	1.08	1.1	1.12	V
		Over voltage at 25°C	1.09	1.1	1.11	V
INT1V	Internal 1.0V reference voltage (1)	After calibration at T = 25°C, over voltage and [-40°C, +85°C],V_{DD} = 3.3V	0.98	1	1.02	V
		Over voltage at 25°C	0.99	1	1.01	V

Note:
1. These values are simulation based and are not covered by production test limits.

37.11.8 Temperature Sensor Characteristics

37.11.8.1 Temperature Sensor Characteristics

Table 37-39. Temperature Sensor Characteristics(1) (Device Variant A)

Symbol	Parameter	Conditions	Min.	Typ.	Max.	Units
	Temperature sensor output voltage	T= 25°C, V_{DDANA} = 3.3V	-	0.667	-	V
	Temperature sensor slope		2.3	2.4	2.5	mV/°C
	Variation over V_{DDANA} voltage	V_{DDANA}=1.62V to 3.6V	-1.7	1	3.7	mV/V
	Temperature Sensor accuracy	Using the method described in the 37.11.8.2 Software-based Refinement of the Actual Temperature	-10	-	10	°C

Table 37-40. Temperature Sensor Characteristics(1) (Device Variant B,C, D and L)

Symbol	Parameter	Conditions	Min.	Typ.	Max.	Units
	Temperature sensor output voltage	T= 25°C, V_{DDANA} = 3.3V	-	0.688	-	V
	Temperature sensor slope		2.06	2.16	2.26	mV/°C
	Variation over V_{DDANA} voltage	V_{DDANA}=1.62V to 3.6V	-0.4	1.4	3	mV/V
	Temperature Sensor accuracy	Using the method described in the 37.11.8.2 Software-based Refinement of the Actual Temperature	-10	-	10	°C

Note: 1. These values are based on characterization. These values are not covered by test limits in production. Temperature sensor values are not guaranteed for Automotive parts.

37.11.8.2 Software-based Refinement of the Actual Temperature

The temperature sensor behavior is linear but depends on several parameters such as the internal voltage reference, which itself depends on the temperature. To take this into account, each device contains a Temperature Log row with data measured and written during the production tests. These calibration values should be read by software to infer the most accurate temperature readings possible.

Downloaded from Arrow.com.

This Software Temperature Log row can be read at address 0x00806030

This section specifies the Temperature Log row content and explains how to refine the temperature sensor output using the values in the Temperature Log row.

37.11.8.2.1 Temperature Log Row

All values in this row were measured in the following conditions:

- $V_{DDIN} = V_{DDIO} = V_{DDANA} = 3.3V$
- ADC Clock speed = 1MHz
- ADC mode: Free running mode, ADC averaging mode with 4 averaged samples
- ADC voltage reference = 1.0V internal buffered reference (INT1V)
- ADC input = Temperature sensor

Table 37-41. Temperature Log Row Content

Bit position	Name	Description
7:0	ROOM_TEMP_VAL_INT	Integer part of room temperature in °C
11:8	ROOM_TEMP_VAL_DEC	Decimal part of room temperature
19:12	HOT_TEMP_VAL_INT	Integer part of hot temperature in °C
23:20	HOT_TEMP_VAL_DEC	Decimal part of hot temperature
31:24	ROOM_INT1V_VAL	2's complement of the internal 1V reference drift at room temperature (versus a 1.0 centered value)
39:32	HOT_INT1V_VAL	2's complement of the internal 1V reference drift at hot temperature (versus a 1.0 centered value)
51:40	ROOM_ADC_VAL	12-bit ADC conversion at room temperature
63:52	HOT_ADC_VAL	12-bit ADC conversion at hot temperature

The temperature sensor values are logged during test production flow for Room and Hot insertions:

- ROOM_TEMP_VAL_INT and ROOM_TEMP_VAL_DEC contains the measured temperature at room insertion (e.g. for ROOM_TEMP_VAL_INT=25 and ROOM_TEMP_VAL_DEC=2, the measured temperature at room insertion is 25.2°C).
- HOT_TEMP_VAL_INT and HOT_TEMP_VAL_DEC contains the measured temperature at hot insertion (e.g. for HOT_TEMP_VAL_INT=83 and HOT_TEMP_VAL_DEC=3, the measured temperature at room insertion is 83.3°C).

The temperature log row also contains the corresponding 12-bit ADC conversions of both Room and Hot temperatures:

- ROOM_ADC_VAL contains the 12-bit ADC value corresponding to (ROOM_TEMP_VAL_INT, ROOM_TEMP_VAL_DEC)
- HOT_ADC_VAL contains the 12-bit ADC value corresponding to (HOT_TEMP_VAL_INT, HOT_TEMP_VAL_DEC)

The temperature log row also contains the corresponding 1V internal reference of both Room and Hot temperatures:

- ROOM_INT1V_VAL is the 2's complement of the internal 1V reference value corresponding to (ROOM_TEMP_VAL_INT, ROOM_TEMP_VAL_DEC)
- HOT_INT1V_VAL is the 2's complement of the internal 1V reference value corresponding to (HOT_TEMP_VAL_INT, HOT_TEMP_VAL_DEC)
- ROOM_INT1V_VAL and HOT_INT1V_VAL values are centered around 1V with a 0.001V step. In other words, the range of values [0,127] corresponds to [1V, 0.873V] and the range of values [-1, -127] corresponds to [1.001V, 1.127V]. INT1V == 1 - (VAL/1000) is valid for both ranges.

37.11.8.2.2 Using Linear Interpolation

For concise equations, we will use the following notations:

- (ROOM_TEMP_VAL_INT, ROOM_TEMP_VAL_DEC) is denoted $temp_R$

Downloaded from Arrow.com.

- (HOT_TEMP_VAL_INT, HOT_TEMP_VAL_DEC) is denoted $temp_H$
- ROOM_ADC_VAL is denoted ADC_R, its conversion to Volt is denoted V_{ADCR}
- HOT_ADC_VAL is denoted ADC_H, its conversion to Volt is denoted V_{ADCH}
- ROOM_INT1V_VAL is denoted $INT1V_R$
- HOT_INT1V_VAL is denoted $INT1V_H$

Using the ($temp_R$, ADC_R) and ($temp_H$, ADC_H) points, using a linear interpolation we have the following equation:

$$\left(\frac{V_{ADC} + -V_{ADCR}}{temp + -temp_R}\right) = \left(\frac{V_{ADCH} + -V_{ADCR}}{temp_H + -temp_R}\right)$$

Given a temperature sensor ADC conversion value ADC_m, we can infer a coarse value of the temperature $temp_C$ as:

$$temp_C = temp_R + \left[\frac{\left\{\left(ADC_m \cdot \frac{1}{\left(2^{12} + -1\right)}\right) + -\left(ADC_R \cdot \frac{INT1V_R}{\left(2^{12} + -1\right)}\right)\right\} \cdot (temp_H + -temp_R)}{\left\{\left(ADC_H \cdot \frac{INT1V_H}{\left(2^{12} + -1\right)}\right) + -\left(ADC_R \cdot \frac{INT1V_R}{\left(2^{12} + -1\right)}\right)\right\}}\right]$$

[Equation 1]

Notes:

1. In the previous expression, we have added the conversion of the ADC register value to be expressed in V.
2. This is a coarse value because we assume INT1V=1V for this ADC conversion.

Using the ($temp_R$, $INT1V_R$) and ($temp_H$, $INT1V_H$) points, using a linear interpolation we have the following equation:

$$\left(\frac{INT1V + -INT1V_R}{temp + -temp_R}\right) = \left(\frac{INT1V_H + -INT1V_R}{temp_H + -temp_R}\right)$$

Then using the coarse temperature value, we can infer a closer to reality INT1V value during the ADC conversion as:

$$INT1V_m = INT1V_R + \left(\frac{(INT1V_H + -INT1V_R) \cdot (temp_C + -temp_R)}{(temp_H + -temp_R)}\right)$$

Back to [Equation 1], if we replace INT1V=1V by INT1V = $INT1V_m$, we can deduce a finer temperature value as:

$$temp_f = temp_R + \left[\frac{\left\{\left(ADC_m \cdot \frac{INT1V_m}{\left(2^{12} + -1\right)}\right) + -\left(ADC_R \cdot \frac{INT1V_R}{\left(2^{12} + -1\right)}\right)\right\} \cdot (temp_H \cdot temp_R)}{\left\{\left(ADC_H \cdot \frac{INT1V_H}{\left(2^{12} + -1\right)}\right) + -\left(ADC_R \cdot \frac{INT1V_R}{\left(2^{12} + -1\right)}\right)\right\}}\right]$$

[Equation 1bis]

37.12 NVM Characteristics

Table 37-42. Maximum Operating Frequency

V_{DD} range	NVM Wait States	Maximum Operating Frequency	Units
1.62V to 2.7V	0	14	MHz
	1	28	
	2	42	
	3	48	
2.7V to 3.63V	0	24	
	1	48	

Downloaded from Arrow.com.

Note that on this flash technology, a max number of 8 consecutive write is allowed per row. Once this number is reached, a row erase is mandatory.

Table 37-43. Flash Endurance and Data Retention

Symbol	Parameter	Conditions	Min.	Typ.	Max.	Units
Ret_{NVM25k}	Retention after up to 25k	Average ambient 55°C	10	50	-	Years
$Ret_{NVM2.5k}$	Retention after up to 2.5k	Average ambient 55°C	20	100	-	Years
Ret_{NVM100}	Retention after up to 100	Average ambient 55°C	25	>100	-	Years
Cyc_{NVM}	Cycling Endurance(1)	-40°C < Ta < 85°C	25k	150k	-	Cycles

1. An endurance cycle is a write and an erase operation.

Table 37-44. EEPROM Emulation(1) Endurance and Data Retention

Symbol	Parameter	Conditions	Min.	Typ.	Max.	Units
$Ret_{EEPROM100k}$	Retention after up to 100k	Average ambient 55°C	10	50	-	Years
$Ret_{EEPROM10k}$	Retention after up to 10k	Average ambient 55°C	20	100	-	Years
Cyc_{EEPROM}	Cycling Endurance(2)	-40°C < Ta < 85°C	100k	600k	-	Cycles

1. The EEPROM emulation is a software emulation described in the App note AT03265.

2. An endurance cycle is a write and an erase operation.

Table 37-45. NVM Characteristics (Device Variant A)

Symbol	Parameter	Conditions	Min.	Typ.	Max.	Units
t_{FPP}	Page programming time	-	-	-	2.5	ms
t_{FRE}	Row erase time	-	-	-	6	ms
t_{FCE}	DSU chip erase time (CHIP_ERASE)	-	-	-	240	ms

Table 37-46. NVM Characteristics (Device Variant B,C, D and L)

Symbol	Parameter	Conditions	Min.	Typ.	Max.	Units
t_{FPP}	Page programming time	-	-	-	2.5	ms
t_{FRE}	Row erase time	-	-	1.2	6	ms
t_{FCE}	DSU chip erase time (CHIP_ERASE)	-	-	-	240	ms

37.13 Oscillators Characteristics

37.13.1 Crystal Oscillator (XOSC) Characteristics

37.13.1.1 Digital Clock Characteristics

The following table describes the characteristics for the oscillator when a digital clock is applied on XIN.

Table 37-47. Digital Clock Characteristics

Symbol	Parameter	Conditions	Min.	Typ.	Max.	Units
f_{CPXIN}	XIN clock frequency		-	-	32	MHz

Downloaded from Arrow.com.

37.13.1.2 Crystal Oscillator Characteristics

The following table describes the characteristics for the oscillator when a crystal is connected between XIN and XOUT . The user must choose a crystal oscillator where the crystal load capacitance C_L is within the range given in the table. The exact value of C_L can be found in the crystal data sheet. The capacitance of the external capacitors (C_{LEXT}) can then be computed as follows:

Load Capacitance Equation

$C_{LOAD} = ([C_{XIN} + C_{LEXT}] * [C_{XOUT} + C_{LEXT}]) / ([C_{XIN} + C_{LEXT} + C_{LEXT} + C_{XOUT}]) + C_{STRAY}$

Where:

C_{LOAD} = Crystal Mfg. C_{LOAD} specification

C_{XIN} = XOSC XIN pin data sheet specification

C_{XOUT} = XOSC XOUT pin data sheet specification

C_{LEXT} = Required external crystal load capacitor

C_{STRAY} (Osc PCB capacitance) = 1.5 pf per 12.5 mm (0.5 inches) (TRACE W = 0.175 mm, H = 36 µm, T= 113 µm)

Table 37-48. Crystal Oscillator Characteristics

Symbol	Parameter	Conditions	Min.	Typ.	Max.	Units
f_{OUT}	Crystal oscillator frequency		0.4	-	32	MHz
ESR	Crystal Equivalent Series Resistance Safety Factor = 3 The AGC doesn't have any noticeable impact on these measurements.	f = 0.455 MHz, C_L = 100pF XOSC.GAIN = 0	-	-	5.6K	Ω
		f = 2MHz, C_L = 20pF XOSC.GAIN = 0	-	-	416	
		f = 4MHz, C_L = 20pF XOSC.GAIN = 1	-	-	243	
		f = 8 MHz, C_L = 20pF XOSC.GAIN = 2	-	-	138	
		f = 16 MHz, C_L = 20pF XOSC.GAIN = 3	-	-	66	
		f = 32MHz, C_L = 18pF XOSC.GAIN = 4	-	-	56	
C_{XIN}	Parasitic capacitor load		-	5.9	-	pF
C_{XOUT}	Parasitic capacitor load		-	3.2	-	pF
	Current Consumption	f = 2MHz, C_L = 20pF, AGC off	27	65	85	µA
		f = 2MHz, C_L = 20pF, AGC on	14	52	73	
		f = 4MHz, C_L = 20pF, AGC off	61	117	150	
		f = 4MHz, C_L = 20pF, AGC on	23	74	100	
		f = 8MHz, C_L = 20pF, AGC off	131	226	296	
		f = 8MHz, C_L = 20pF, AGC on	56	128	172	
		f = 16MHz, C_L = 20pF, AGC off	305	502	687	
		f = 16MHz, C_L = 20pF, AGC on	116	307	552	
		f = 32MHz, C_L = 18pF, AGC off	1031	1622	2200	
		f = 32MHz, C_L = 18pF, AGC on	278	615	1200	

© 2021 Microchip Technology Inc. and its subsidiaries

Downloaded from Arrow.com.

.....continued						
Symbol	Parameter	Conditions	Min.	Typ.	Max.	Units
$t_{STARTUP}$	Start-up time	f = 2MHz, C_L = 20pF, XOSC.GAIN = 0, ESR = 600Ω	-	14K	48K	cycles
		f = 4MHz, C_L = 20pF, XOSC.GAIN = 1, ESR = 100Ω	-	6.8K	19.5K	
		f = 8 MHz, C_L = 20pF, XOSC.GAIN = 2, ESR = 35Ω	-	5.55K	13K	
		f = 16 MHz, C_L = 20pF, XOSC.GAIN = 3, ESR = 25Ω	-	6.75K	14.5K	
		f = 32MHz, C_L = 18pF, XOSC.GAIN = 4, ESR = 40Ω	-	5.3K	9.6K	

Figure 37-6. Oscillator Connection

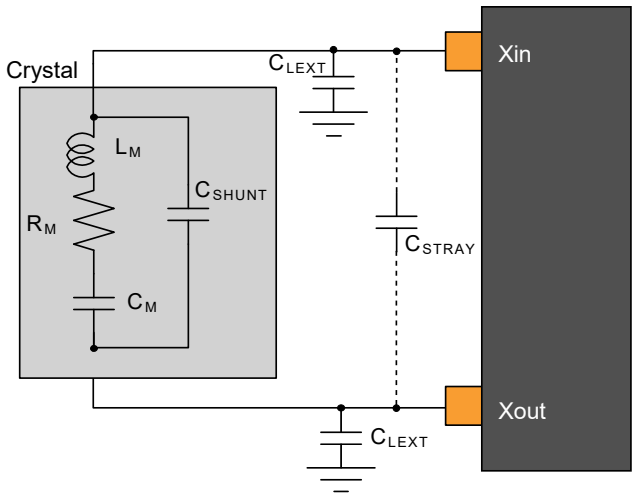

37.13.2 External 32 kHz Crystal Oscillator (XOSC32K) Characteristics

37.13.2.1 Digital Clock Characteristics

The following table describes the characteristics for the oscillator when a digital clock is applied on XIN32 pin.

Table 37-49. Digital Clock Characteristics

Symbol	Parameter	Conditions	Min.	Typ.	Max.	Units
$f_{CPXIN32}$	XIN32 clock frequency		-	32.768	-	kHz
	XIN32 clock duty cycle		-	50	-	%

37.13.2.1.1 Crystal Oscillator Characteristics

Figure 37-6 and the equation in also applies to the 32 kHz oscillator connection. The user must choose a crystal oscillator where the crystal load capacitance C_L is within the range given in the table. The exact value of C_L can be found in the crystal data sheet.

Table 37-50. 32kHz Crystal Oscillator Characteristics (Device Variant A)

Symbol	Parameter	Conditions	Min.	Typ.	Max.	Units
f_{OUT}	Crystal oscillator frequency		-	32768	-	Hz

Downloaded from Arrow.com.

.....continued						
Symbol	Parameter	Conditions	Min.	Typ.	Max.	Units
$t_{STARTUP}$	Startup time	ESR_{XTAL} = 39.9 kΩ, C_L = 12.5 pF	-	28K	30K	cycles
C_L	Crystal load capacitance		-	-	12.5	pF
C_{SHUNT}	Crystal shunt capacitance		-	0.1	-	
C_{XIN32}	Parasitic capacitor load		-	3.1	-	
C_{XOUT32}	Parasitic capacitor load		-	3.3	-	
$I_{XOSC32K}$	Current consumption		-	1.22	2.19	µA
ESR	Crystal equivalent series resistance f=32.768kHz , Safety Factor = 3	C_L=12.5pF	-	-	141	kΩ

Table 37-51. 32kHz Crystal Oscillator Characteristics (Device Variant B,C, D, and L)

Symbol	Parameter	Conditions	Min.	Typ.	Max.	Units
f_{OUT}	Crystal oscillator frequency		-	32768	-	Hz
$t_{STARTUP}$	Startup time	ESR_{XTAL} = 39.9 kΩ, C_L = 12.5 pF	-	28K	30K	cycles
C_L	Crystal load capacitance		-	-	12.5	pF
C_{SHUNT}	Crystal shunt capacitance		-	0.1	-	
C_{XIN32}	Parasitic capacitor load		-	3.2	-	
C_{XOUT32}	Parasitic capacitor load		-	3.7	-	
$I_{XOSC32K}$	Current consumption		-	1.22	2.19	µA
ESR	Crystal equivalent series resistance f=32.768kHz , Safety Factor = 3	C_L=12.5pF	-	-	100	kΩ

37.13.3 Digital Frequency Locked Loop (DFLL48M) Characteristics

Table 37-52. DFLL48M Characteristics - Open Loop Mode(1)

Symbol	Parameter	Conditions	Min.	Typ.	Max.	Units
f_{OUT}	Output frequency	DFLLVAL.COARSE = DFLL48M COARSE CAL DFLLVAL.FINE = 512	47	48	49	MHz
I_{DFLL}	Power consumption on V_{DDIN}	IDFLLVAL.COARSE = DFLL48M COARSE CAL DFLLVAL.FINE = 512	-	403	453	µA
$t_{STARTUP}$	Start-up time	DFLLVAL.COARSE = DFLL48M COARSE CAL DFLLVAL.FINE = 512 f_{OUT} within 90 % of final value	-	8	9	µs

Note: 1. DFLL48M in Open loop after calibration at room temperature.

Downloaded from Arrow.com.

Table 37-53. DFLL48M Characteristics - Closed Loop Mode(1) (Device Variant A)

Symbol	Parameter	Conditions	Min.	Typ.	Max.	Units
f_{OUT}	Average Output frequency	f_{REF} = XTAL, 32 .768kHz, 100ppm DFLLMUL = 1464	47.963	47.972	47.981	MHz
f_{REF}	Reference frequency		0.732	32.768	33	kHz
Jitter	Cycle to Cycle jitter	f_{REF} = XTAL, 32 .768kHz, 100ppm DFLLMUL = 1464	-	-	0.42	ns
I_{DFLL}	Power consumption on V_{DDIN}	f_{REF} = XTAL, 32 .768kHz, 100ppm DFLLMUL = 1464	-	425	482	µA
t_{LOCK}	Lock time	f_{REF} = XTAL, 32 .768kHz, 100ppm DFLLMUL = 1464 DFLLVAL.COARSE = DFLL48M COARSE CAL DFLLVAL.FINE = 512 DFLLCTRL.BPLCKC = 1 DFLLCTRL.QLDIS = 0 DFLLCTRL.CCDIS = 1 DFLLMUL.FSTEP = 10	100	200	500	µs

Table 37-54. DFLL48M Characteristics - Closed Loop Mode(1) (Device Variant B, C, D, and L)

Symbol	Parameter	Conditions	Min.	Typ.	Max.	Units
f_{OUT}	Average Output frequency	f_{REF} = 32 .768kHz	47.963	47.972	47.981	MHz
f_{REF}	Reference frequency		0.732	32.768	33	kHz
Jitter	Cycle to Cycle jitter	f_{REF} = 32 .768kHz	-	-	0.42	ns
I_{DFLL}	Power consumption on V_{DDIN}	f_{REF} =32 .768kHz	-	403	453	µA
t_{LOCK}	Lock time	f_{REF} = 32 .768kHz DFLLVAL.COARSE = DFLL48M COARSE CAL DFLLVAL.FINE = 512 DFLLCTRL.BPLCKC = 1 DFLLCTRL.QLDIS = 0 DFLLCTRL.CCDIS = 1 DFLLMUL.FSTEP = 10	-	200	500	µs

1. To insure that the device stays within the maximum allowed clock frequency, any reference clock for DFLL in close loop must be within a 2% error accuracy.

Downloaded from Arrow.com.

37.13.4 32.768kHz Internal oscillator (OSC32K) Characteristics

Table 37-55. 32kHz RC Oscillator Characteristics

Symbol	Parameter	Conditions	Min.	Typ.	Max.	Units
f_{OUT}	Output frequency	Calibrated against a 32.768kHz reference at 25°C, over [-40, +85]C, over [1.62, 3.63]V	28.508	32.768	34.734	kHz
		Calibrated against a 32.768kHz reference at 25°C, at V_{DD}=3.3V	32.276	32.768	33.260	
		Calibrated against a 32.768kHz reference at 25°C, over [1.62, 3.63]V	31.457	32.768	34.079	
I_{OSC32K}	Current consumption		-	0.67	1.31	µA
$t_{STARTUP}$	Start-up time		-	1	2	cycle
Duty	Duty Cycle		-	50	-	%

37.13.5 Ultra Low Power Internal 32kHz RC Oscillator (OSCULP32K) Characteristics

Table 37-56. Ultra Low Power Internal 32kHz RC Oscillator Characteristics

Symbol	Parameter	Conditions	Min.	Typ.	Max.	Units
f_{OUT}	Output frequency	Calibrated against a 32.768kHz reference at 25°C, over [-40, +85]C, over [1.62, 3.63]V	25.559	32.768	38.011	kHz
		Calibrated against a 32.768kHz reference at 25°C, at V_{DD}=3.3V	31.293	32.768	34.570	
		Calibrated against a 32.768kHz reference at 25°C, over [1.62, 3.63]V	31.293	32.768	34.570	
$i_{OSCULP32K}$(1)(2)			-	-	125	nA
$t_{STARTUP}$	Start-up time		-	10	-	cycles
Duty	Duty Cycle		-	50	-	%

Notes: 1. These values are based on simulation. These values are not covered by test limits in production or characterization.

2. This oscillator is always on.

37.13.6 8MHz RC Oscillator (OSC8M) Characteristics

Table 37-57. Internal 8MHz RC Oscillator Characteristics

Symbol	Parameter	Conditions	Min.	Typ.	Max.	Units
f_{OUT}	Output frequency	Calibrated against a 8MHz reference at 25°C, over [-40, +85]C, over [1.62, 3.63]V	7.8	8	8.16	MHz
		Calibrated against a 8MHz reference at 25°C, at V_{DD}=3.3V	7.94	8	8.06	
		Calibrated against a 8MHz reference at 25°C, over [1.62, 3.63]V	7.92	8	8.08	
TempCo	Frequency vs. Temperature drift		-1.2		1	%
SupplyCo	Frequency vs. Supply drift		-2		2	%

Downloaded from Arrow.com.

.....continued						
Symbol	Parameter	Conditions	Min.	Typ.	Max.	Units
I_{OSC8M}	Current consumption	IDLE2 on OSC32K versus IDLE2 on calibrated OSC8M enabled at 8MHz (FRANGE=1, PRESC=0)		64	96	µA
$t_{STARTUP}$	Startup time		-	2.4	3.3	µs
Duty	Duty cycle		-	50	-	%

37.13.7 Fractional Digital Phase Locked Loop (FDPLL96M) Characteristics

Table 37-58. FDPLL96M Characteristics(1) (Device Variant A)

Symbol	Parameter	Conditions	Min.	Typ.	Max.	Units
f_{IN}	Input frequency		32	-	2000	KHz
f_{OUT}	Output frequency		48	-	96	MHz
$I_{FDPLL96M}$	Current consumption	f_{IN}= 32 kHz, f_{OUT}= 48 MHz	-	500	700	µA
		f_{IN}= 32 kHz, f_{OUT}= 96 MHz	-	900	1200	
J_p	Period jitter	f_{IN}= 32 kHz, f_{OUT}= 48 MHz	-	1.5	2.0	%
		f_{IN}= 32 kHz, f_{OUT}= 96 MHz	-	3.0	10.0	
		f_{IN}= 2 MHz, f_{OUT}= 48 MHz	-	1.3	2.0	
		f_{IN}= 2 MHz, f_{OUT}= 96 MHz	-	3.0	7.0	
t_{LOCK}	Lock Time	After start-up, time to get lock signal. f_{IN}= 32 kHz, f_{OUT}= 96 MHz	-	1.3	2	ms
		f_{IN}= 2 MHz, f_{OUT}= 96 MHz	-	25	50	µs
Duty	Duty cycle		40	50	60	%

Table 37-59. FDPLL96M Characteristics(1) (Device Variant B and L with Silicon Revision E)

Symbol	Parameter	Conditions	Min.	Typ.	Max.	Units
f_{IN}	Input frequency		32	-	2000	KHz
f_{OUT}	Output frequency		48	-	96	MHz
$I_{FDPLL96M}$	Current consumption	f_{IN}= 32 kHz, f_{OUT}= 48 MHz	-	500	700	µA
		f_{IN}= 32 kHz, f_{OUT}= 96 MHz	-	900	1200	
J_p	Period jitter	f_{IN}= 32 kHz, f_{OUT}= 48 MHz	-	1.5	2.1	%
		f_{IN}= 32 kHz, f_{OUT}= 96 MHz	-	4.0	10.0	
		f_{IN}= 2 MHz, f_{OUT}= 48 MHz	-	1.6	2.2	
		f_{IN}= 2 MHz, f_{OUT}= 96 MHz	-	4.6	10.2	
t_{LOCK}	Lock Time	After start-up, time to get lock signal. f_{IN}= 32 kHz, f_{OUT}= 96 MHz	-	1.2	2	ms
		f_{IN}= 2 MHz, f_{OUT}= 96 MHz	-	25	50	µs
Duty	Duty cycle		40	50	60	%

Downloaded from Arrow.com.

Table 37-60. FDPLL96M Characteristics(1) (Silicon Revision F and G)

Symbol	Parameter	Conditions	Min.	Typ.	Max.	Units
f_{IN}	Input frequency		32	-	2000	KHz
f_{OUT}	Output frequency		48	-	96	MHz
$I_{FDPLL96M}$	Current consumption	f_{IN}= 32 kHz, f_{OUT}= 48 MHz	-	500	-	µA
		f_{IN}= 32 kHz, f_{OUT}= 96 MHz	-	900	-	
J_p	Period jitter	f_{IN}= 32 kHz, f_{OUT}= 48 MHz	-	2.2	3.0	%
		f_{IN}= 32 kHz, f_{OUT}= 96 MHz	-	3.7	9.0	
		f_{IN}= 2 MHz, f_{OUT}= 48 MHz	-	2.2	3.0	
		f_{IN}= 2 MHz, f_{OUT}= 96 MHz	-	4.4	9.7	
t_{LOCK}	Lock Time	After start-up, time to get lock signal. f_{IN}= 32 kHz, f_{OUT}= 96 MHz	-	1.0	2	ms
		f_{IN}= 2 MHz, f_{OUT}= 96 MHz	-	22	50	µs
Duty	Duty cycle		40	50	60	%

Note: All values have been characterized with FILTSEL[1/0] as the default value.

37.14 PTC Typical Characteristics

37.14.1 Device Variant A

Figure 37-7. Power Consumption [µA]
1 sensor, noise countermeasures disabled, f=48MHz, Vcc=3.3V

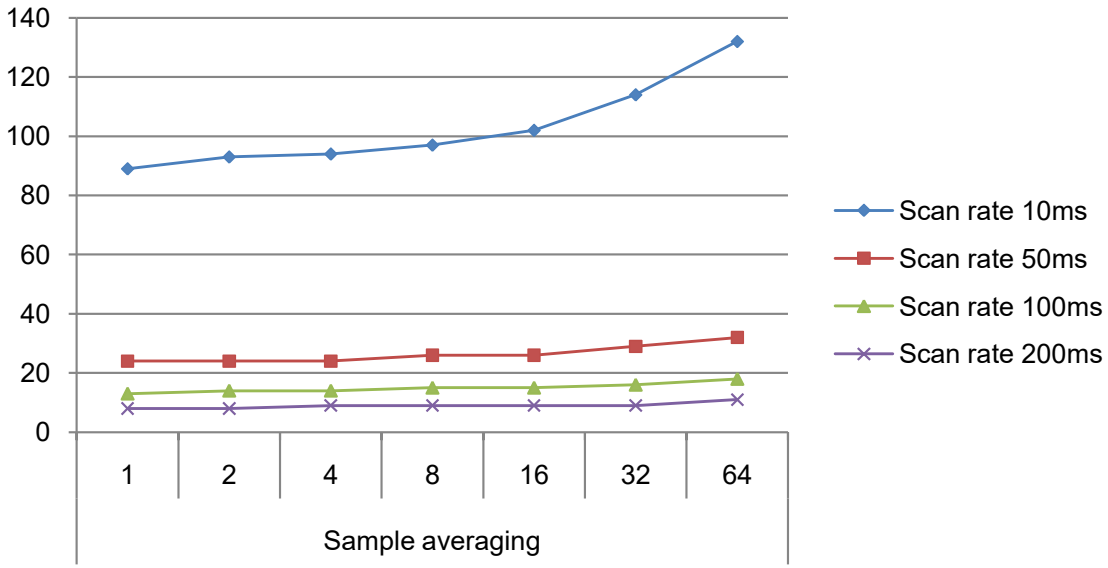

Downloaded from Arrow.com.

Figure 37-8. Power Consumption [µA]
1 sensor, noise countermeasures Enabled, f=48MHz, Vcc=3.3V

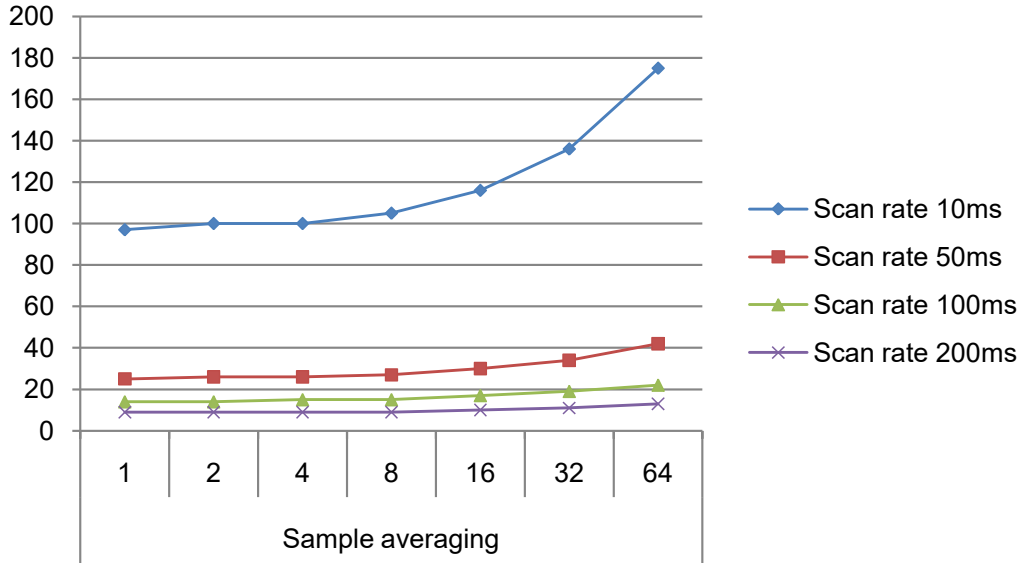

Figure 37-9. Power Consumption [µA]
10 sensors, noise countermeasures disabled, f=48MHz, Vcc=3.3V

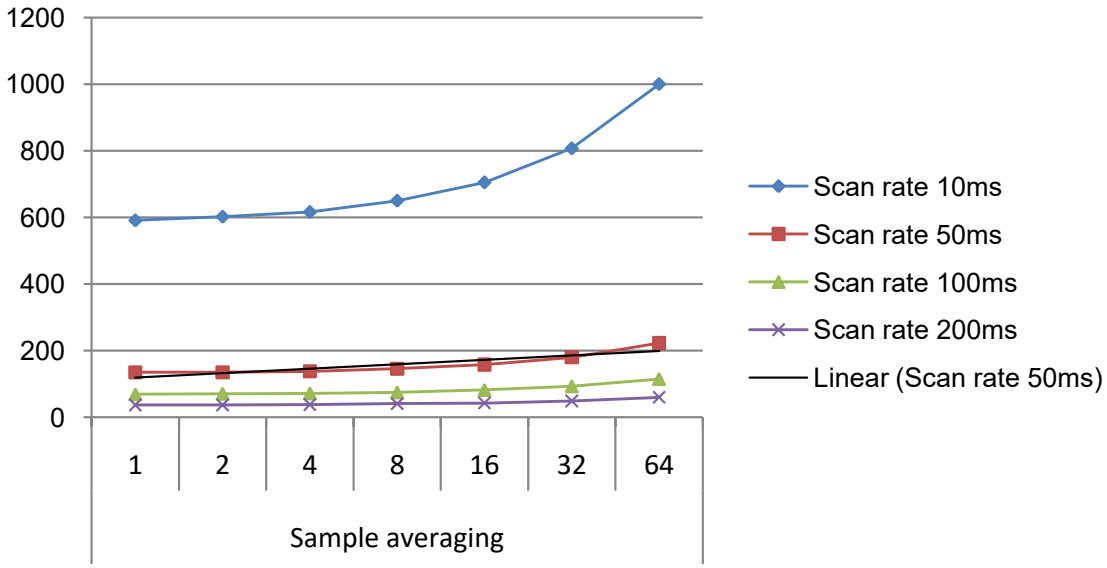

Downloaded from Arrow.com.

Figure 37-10. Power Consumption [µA]
10 sensors, noise countermeasures Enabled, f=48MHz, Vcc=3.3V

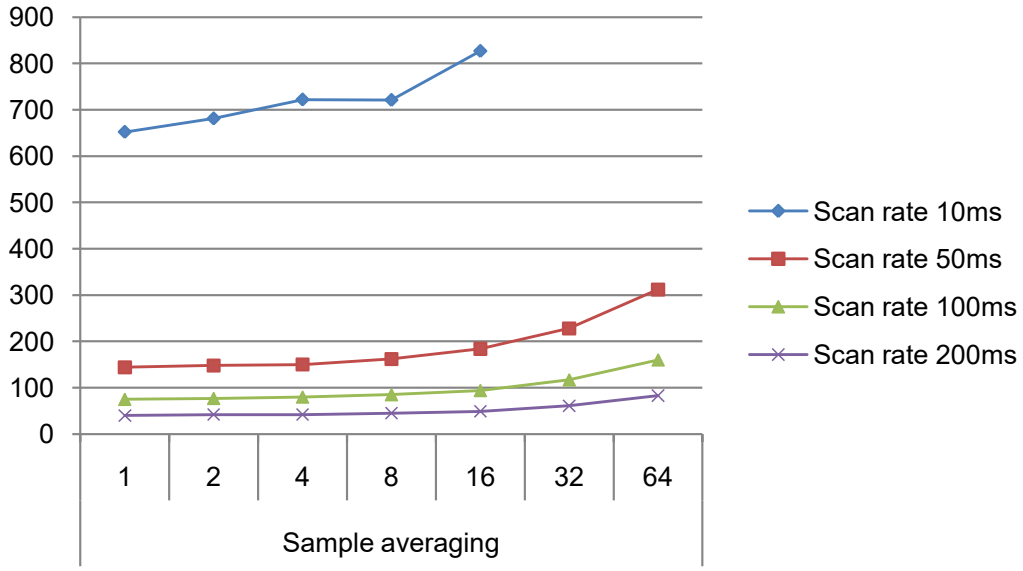

Figure 37-11. Power Consumption [µA]
100 sensors, noise countermeasures disabled, f=48MHz, Vcc=3.3V

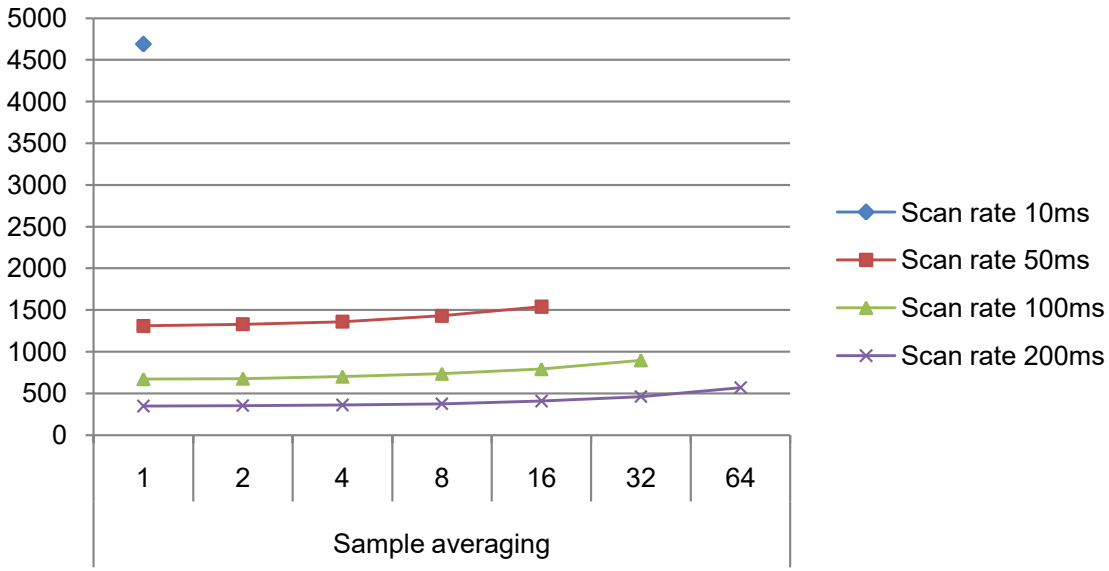

Downloaded from Arrow.com.

Figure 37-12. Power Consumption [µA]
100 sensors, noise countermeasures Enabled, f=48MHz, Vcc=3.3V

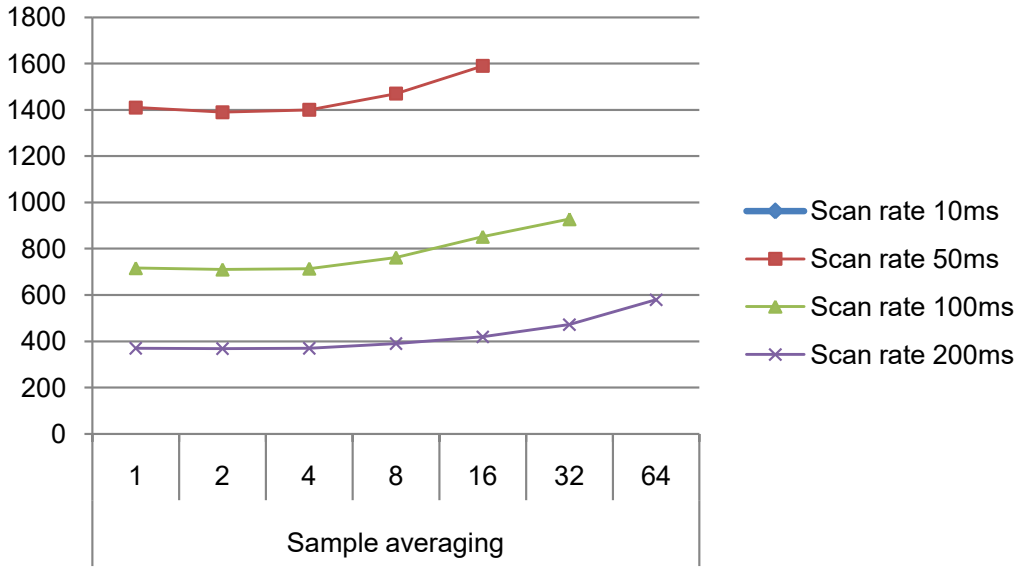

Figure 37-13. CPU Utilization

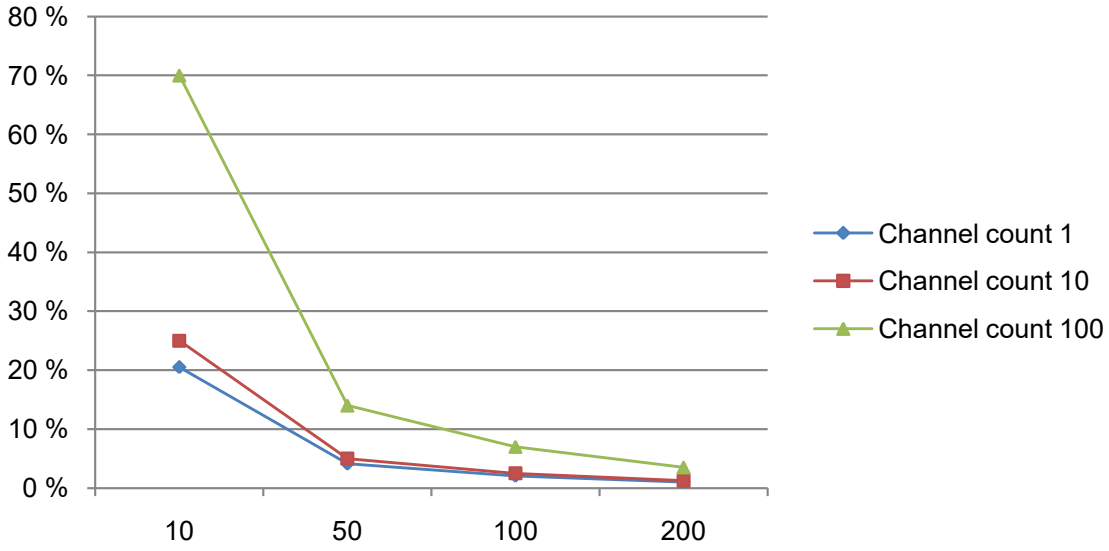

37.14.2 Device Variant B,C and D

V_{CC} = 3.3C and f_{CPU} = 48 MHz for the following PTC measurements.

Downloaded from Arrow.com.

Figure 37-14. 1 Sensor / PTC_GCLK = 4 MHz / FREQ_MODE_NONE

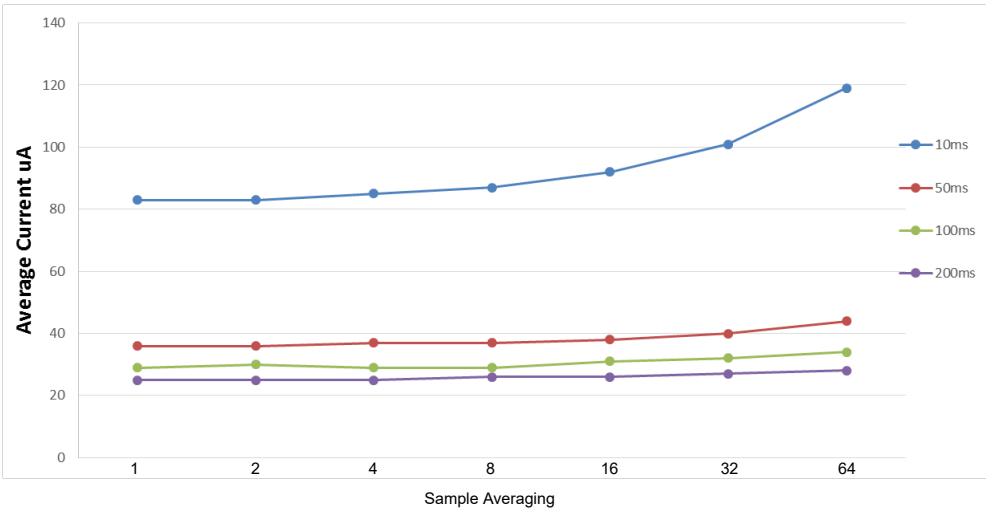

Figure 37-15. 1 Sensor / PTC_GCLK = 2 MHz / FREQ_MODE_HOP

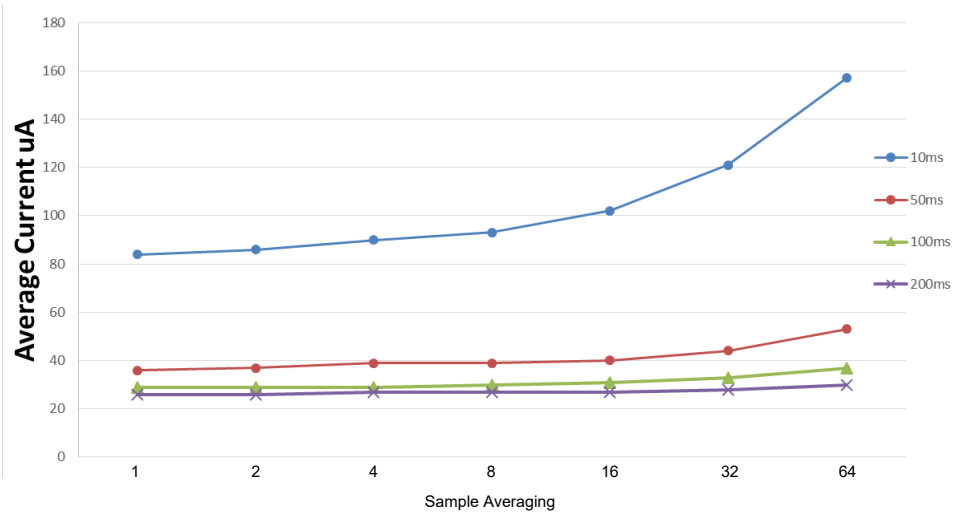

Downloaded from Arrow.com.

Figure 37-16. 10 Sensor / PTC_GCLK = 4 MHz / FREQ_MODE_NONE

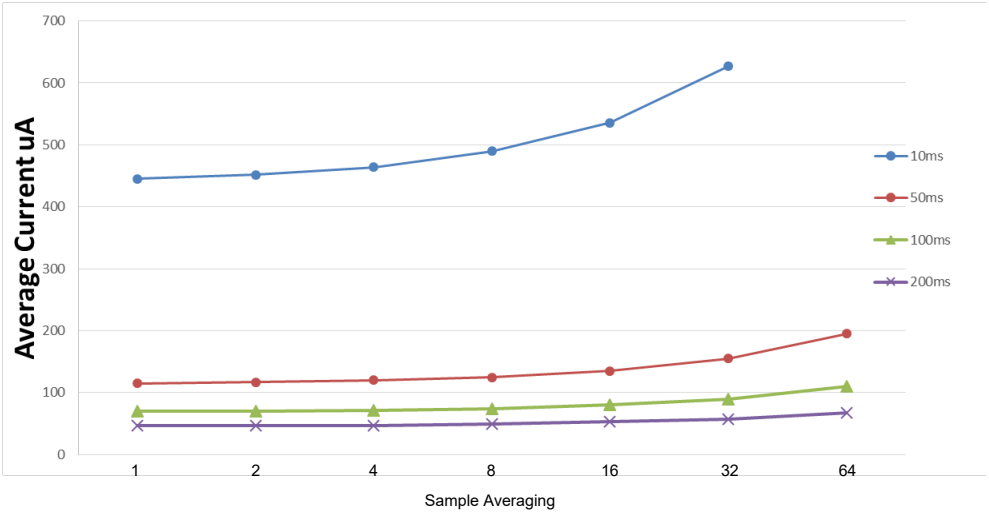

Figure 37-17. 10 Sensor / PTC_GCLK = 2 MHz / FREQ_MODE_HOP

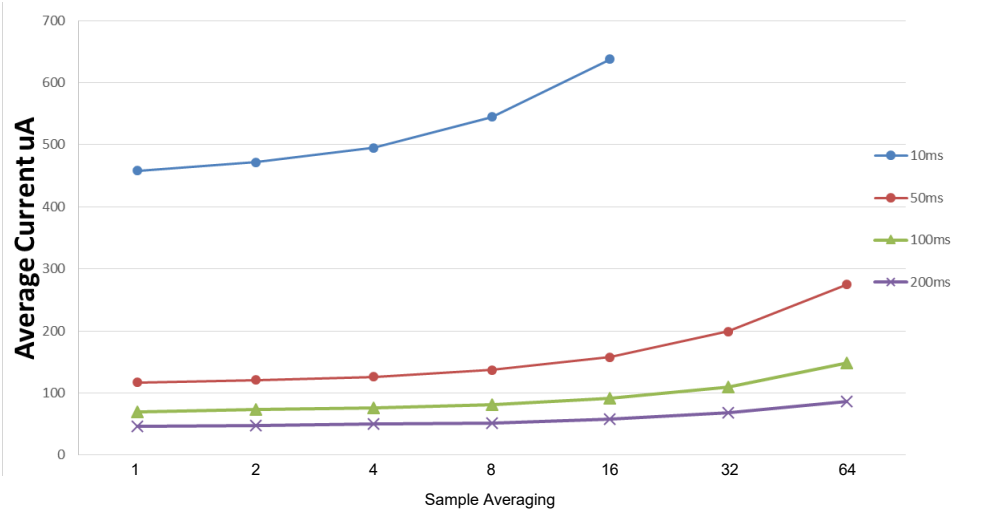

Downloaded from Arrow.com.

Figure 37-18. 100 Sensor / PTC_GCLK = 4 MHz / FREQ_MODE_NONE

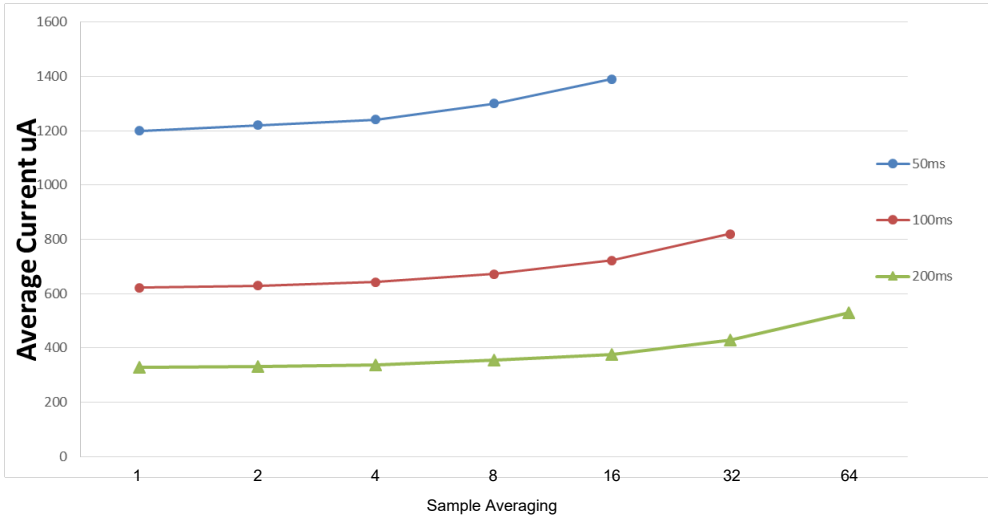

Figure 37-19. 100 Sensor / PTC_GCLK = 2 MHz / FREQ_MODE_HOP

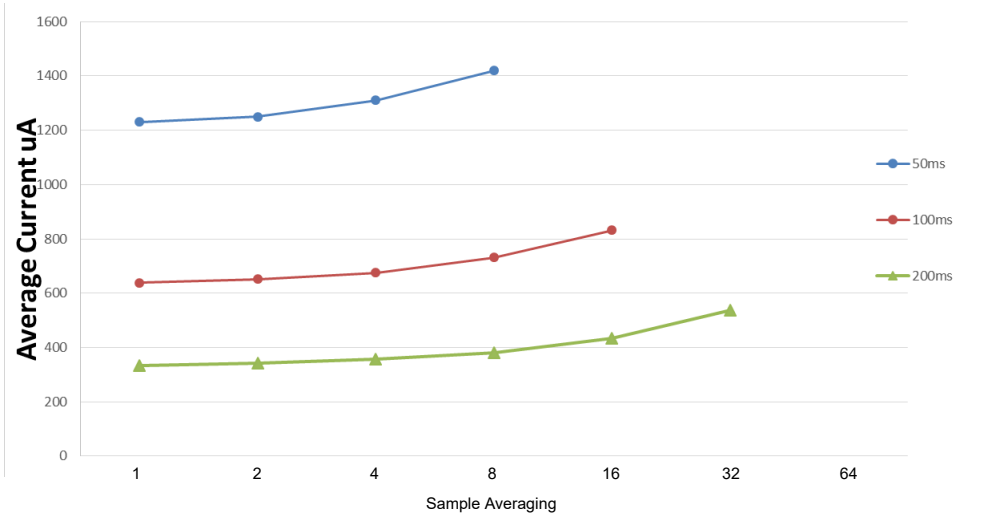

Downloaded from Arrow.com.

Table 37-61. Sensor Load Capacitance

Symbol	Mode	PTC channel	Max Sensor Load (1)	Units
Cload	Self-capacitance	Y0	16	pF
		Y1	23	
		Y2	19	
		Y3	23	
		Y4		
		Y5		
		Y6		
		Y7		
		Y8		
		Y9		
		Y10	19	
		Y11	23	
		Y12		
		Y13		
		Y14		
		Y15		
	Mutual-capacitance	All	30	

Note:

1. Capacitance load that the PTC circuitry can compensate for each channel.

Table 37-62. Analog Gain Settings

Symbol	Setting	Average
Gain	GAIN_1	1.0
	GAIN_2	2.0
	GAIN_4	3.8
	GAIN_8	8.0
	GAIN_16	12.4
	GAIN_32	-

Notes:

1. Analog Gain is a parameter of the QTouch Library. Refer to the QTouch Library Peripheral Touch Controller User Guide.
2. GAIN_16 and GAIN_32 settings are not recommended, otherwise the PTC measurements might get unstable.

The values in the Power Consumption table below are measured values of power consumption under the following conditions:

Operating conditions

VDD = 3.3 V

Clocks

Downloaded from Arrow.com.

OSC8M used as main clock source, running undivided at 8MHz

CPU is running on flash with 0 wait states, at 8MHz

PTC running at 4MHz

PTC configuration

Mutual-capacitance mode

One touch channel

System configuration

Standby sleep mode enabled

RTC running on OSCULP32K: used to define the PTC scan rate, through the event system

Drift Calibration disabled: no interrupts, PTC scans are performed in standby mode

Drift Calibration enabled: RTC interrupts (wakeup) the CPU to perform PTC scans. PTC drift calibration is performed every 1.5 sec.

Table 37-63.

Symbol	Parameters	Drift Calibration	PTC scan rate (msec)	Oversamples	Ta	Typ.	Max	Units
IDD	Current Consumption	Disabled	10	4	Max 85°C Typ 25°C	9	107	µA
				16		17	117	
			50	4		5	102	
				16		6	104	
			100	4		4	102	
				16		5	103	
			200	4		4	102	
				16		4	102	
		Enabled	10	4		15	114	
				16		23	124	
			50	4		7	105	
				16		8	108	
			100	4		5	103	
				16		6	105	
			200	4		6	103	
				16		6	104	

37.15 USB Characteristics

The USB on-chip buffers comply with the Universal Serial Bus (USB) v2.0 standard. All AC parameters related to these buffers can be found within the USB 2.0 electrical specifications.

The USB interface is USB-IF certified:

- TID 40001583 - Peripheral Silicon > Low/Full Speed > Silicon Building Blocks

- TID 120000272 - Embedded Hosts > Full Speed

Electrical configuration required to be USB compliance:

Downloaded from Arrow.com.

- The CPU frequency must be higher 8MHz when USB is active (No constraint for USB suspend mode)
- The operating voltages must be 3.3V (Min. 3.0V, Max. 3.6V).
- The GCLK_USB frequency accuracy source must be less than:
- In USB device mode, 48MHz +/-0.25%
- In USB host mode, 48MHz +/-0.05%

Table 37-64. GCLK_USB Clock Setup Recommendations

Clock setup		USB Device	USB Host
DFLL48M	Open loop	No	No
	Closed loop, any internal OSC source	No	No
	Closed loop, any external XOSC source	Yes	No
	Closed loop, USB SOF source (USB recovery mode)(1)	Yes(2)	N/A
FDPLL96M	Any internal OSC source (32K, 8M, ...)	No	No
	Any external XOSC source (< 1MHz)	Yes	No
	Any external XOSC source (> 1MHz)	Yes(3)	Yes

Notes: 1. When using DFLL48M in USB recovery mode, the Fine Step value must be Ah to guarantee a USB clock at +/-0.25% before 11ms after a resume.

2. Very high signal quality and crystal less. It is the best setup for USB Device mode.

3. FDPLL lock time is short when the clock frequency source is high (> 1MHz). Thus, FDPLL and external OSC can be stopped during USB suspend mode to reduce consumption and guarantee a USB wake-up time (See TDRSMDN in USB specification).

37.16 Timing Characteristics

37.16.1 External Reset

Table 37-65. External Reset Characteristics

Symbol	Parameter	Condition	Min.	Typ.	Max.	Units
t_{EXT}	Minimum reset pulse width		10	-	-	ns

Table 37-66. External Reset Characteristics (Silicon Revision G)

Symbol	Parameter	Condition	Min.	Typ.	Max.	Units
t_{EXT}	Minimum reset pulse width		1000	-	-	ns

Downloaded from Arrow.com.

37.16.2 SERCOM in SPI Mode Timing

Figure 37-20. SPI Timing Requirements in Host Mode

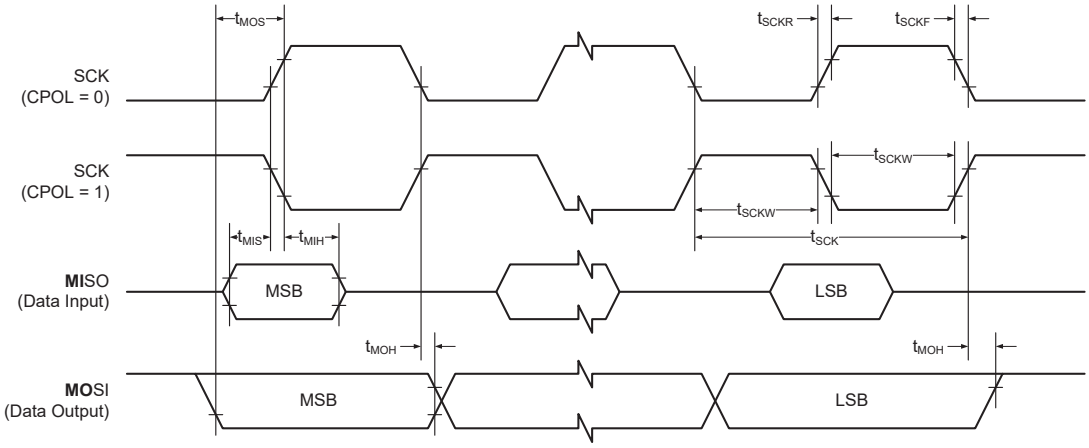

Figure 37-21. SPI Timing Requirements in Client Mode

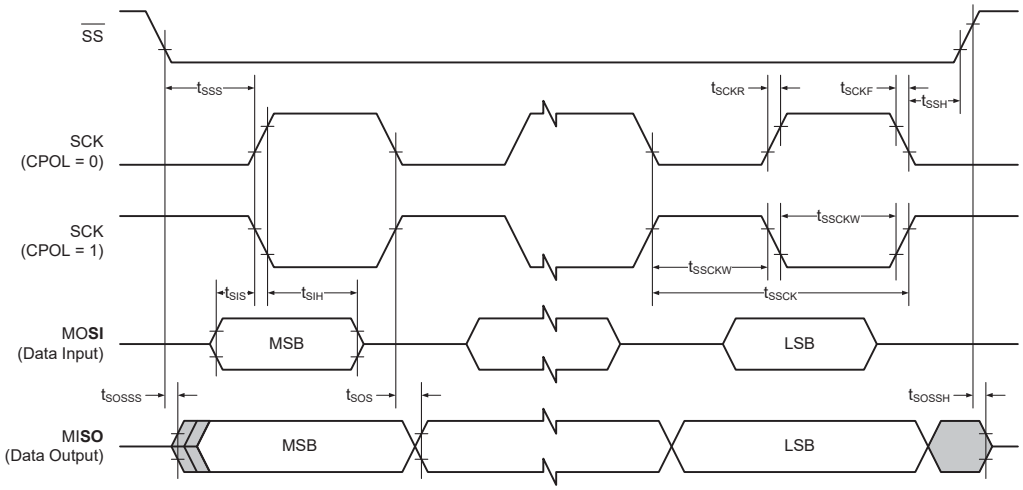

Downloaded from Arrow.com.

Table 37-67. SPI Timing Characteristics and Requirements(1)

Symbol	Parameter	Conditions		Min.	Typ.	Max.	Units
t_{SCK}	SCK period	Host			84		ns
t_{SCKW}	SCK high/low width	Host		-	0.5*t_{SCK}	-	
t_{SCKR}	SCK rise time(2)	Host		-	-	-	
t_{SCKF}	SCK fall time(2)	Host		-	-	-	
t_{MIS}	MISO setup to SCK	Host		-	21	-	
t_{MIH}	MISO hold after SCK	Host		-	13	-	
t_{MOS}	MOSI setup SCK	Host		-	t_{SCK}/2 - 3	-	
t_{MOH}	MOSI hold after SCK	Host		-	3	-	
t_{SSCK}	Client SCK Period	Client		1*t_{CLK_APB}	-	-	
t_{SSCKW}	SCK high/low width	Client		0.5*t_{SSCK}	-	-	
t_{SSCKR}	SCK rise time(2)	Client		-	-	-	
t_{SSCKF}	SCK fall time(2)	Client		-	-	-	
t_{SIS}	MOSI setup to SCK	Client		t_{SSCK}/2 - 9	-	-	
t_{SIH}	MOSI hold after SCK	Client		t_{SSCK}/2 - 3	-	-	
t_{SSS}	$\overline{SS}$ setup to SCK	Client	PRELOADEN=1	2*t_{CLK_APB} + t_{SOS}	-	-	
			PRELOADEN=0	t_{SOS}+7	-	-	
t_{SSH}	$\overline{SS}$ hold after SCK	Client		t_{SIH} - 4	-	-	
t_{SOS}	MISO setup SCK	Client		-	t_{SSCK}/2 - 18	-	
t_{SOH}	MISO hold after SCK	Client		-	18	-	
t_{SOSS}	MISO setup after $\overline{SS}$ low	Client		-	18	-	
t_{SOSH}	MISO hold after $\overline{SS}$ high	Client		-	10	-	

Notes:

1. These values are based on simulation. These values are not covered by test limits in production.
2. See 37.9 I/O Pin Characteristics.

37.16.3 SERCOM in I²C Mode Timing

This section describes the requirements for devices connected to the I²C Interface Bus.

Downloaded from Arrow.com.

Figure 37-22. I²C Interface Bus Timing

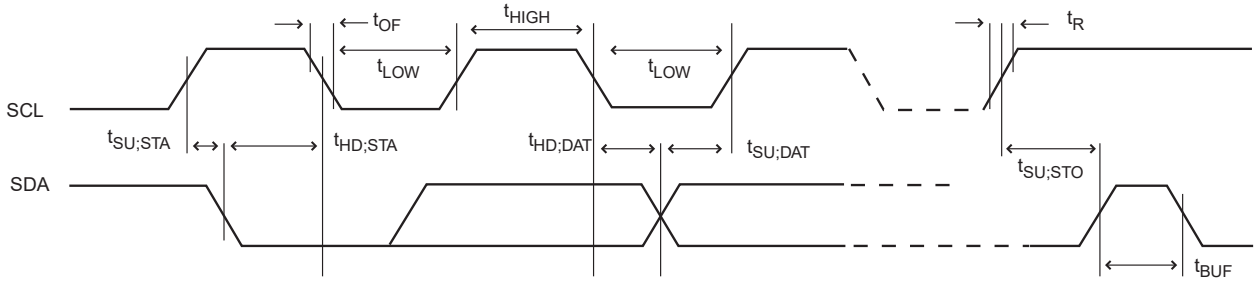

Table 37-68. I²C Interface Timing (Device Variant A)

Symbol	Parameter		Conditions	Min.	Typ.	Max.	Units
t_R	Rise time for both SDA and SCL	Standard / Fast Mode	IC_b(2) = 400pF	-	215	300	ns
		Fast Mode +	IC_b(2) = 550pF		60	100	
		High Speed Mode	IC_b(2) = 100pF		20	40	
t_{OF}	Output fall time from V_{IHmin} to V_{ILmax}	Standard / Fast Mode	10pF < C_b(2) < 400pF		20.0	50.0	
		Fast Mode +	10pF < C_b(2) < 550pF		15.0	50.0	
		High Speed Mode	10pF < C_b(2)< 100pF		10.0	40.0	
$t_{HD;STA}$	Hold time (repeated) START condition		f_{SCL} > 100 kHz, Host	t_{LOW}-9	-	-	
t_{LOW}	Low period of SCL Clock		f_{SCL} > 100 kHz	113	-	-	
t_{BUF}	Bus free time between a STOP and a START condition		f_{SCL} > 100 kHz	t_{LOW}	-	-	
$t_{SU;STA}$	Setup time for a repeated START condition		f_{SCL} > 100 kHz, Host	t_{LOW}+7	-	-	
$t_{HD;DAT}$	Data hold time		f_{SCL} > 100 kHz, Host	9	-	12	
$t_{SU;DAT}$	Data setup time		f_{SCL} > 100 kHz, Host	104	-	-	
$t_{SU;STO}$	Setup time for STOP condition		f_{SCL} > 100 kHz, Host	t_{LOW}+9	-	-	
$t_{SU;DAT;rx}$	Data setup time (receive mode)		f_{SCL} > 100 kHz, Client	51	-	56	
$t_{HD;DAT;tx}$	Data hold time (send mode)		f_{SCL} > 100 kHz, Client	71	90	138	

Downloaded from Arrow.com.

Table 37-69. I^2C Interface Timing (Device Variant B,C and D)

Symbol	Parameter		Conditions	Min.	Typ.	Max.	Units
t_R	Rise time for both SDA and SCL	Standard / Fast Mode	C_b(2) = 400pF	-	230	350	ns
		Fast Mode +	C_b(2) = 550pF		60	100	
		High Speed Mode	C_b(2) = 100pF		30	60	
t_{OF}	Output fall time from V_{IHmin} to V_{ILmax}	Standard / Fast Mode	10pF < C_b(2) < 400pF		25	50	
		Fast Mode +	10pF < C_b(2) < 550pF		20	30	
		High Speed Mode	10pF < C_b(2) < 100pF		10	20	
$t_{HD;STA}$	Hold time (repeated) START condition		f_{SCL} > 100 kHz, Host	t_{LOW}-9	-	-	
t_{LOW}	Low period of SCL Clock		f_{SCL} > 100 kHz	113	-	-	
t_{BUF}	Bus free time between a STOP and a START condition		f_{SCL} > 100 kHz	t_{LOW}	-	-	
$t_{SU;STA}$	Setup time for a repeated START condition		f_{SCL} > 100 kHz, Host	t_{LOW}+7	-	-	
$t_{HD;DAT}$	Data hold time		f_{SCL} > 100 kHz, Host	9	-	12	
$t_{SU;DAT}$	Data setup time		f_{SCL} > 100 kHz, Host	104	-	-	
$t_{SU;STO}$	Setup time for STOP condition		f_{SCL} > 100 kHz, Host	t_{LOW}+9	-	-	
$t_{SU;DAT;rx}$	Data setup time (receive mode)		f_{SCL} > 100 kHz, Client	51	-	56	
$t_{HD;DAT;tx}$	Data hold time (send mode)		f_{SCL} > 100 kHz, Client	71	90	138	

Notes:

1. These values are based on simulation. These values are not covered by test limits in production.
2. C_b = Capacitive load on each bus line. Otherwise noted, value of C_b set to 20pF.

Downloaded from Arrow.com.

37.16.4 SWD Timing

Figure 37-23. SWD Interface Signals

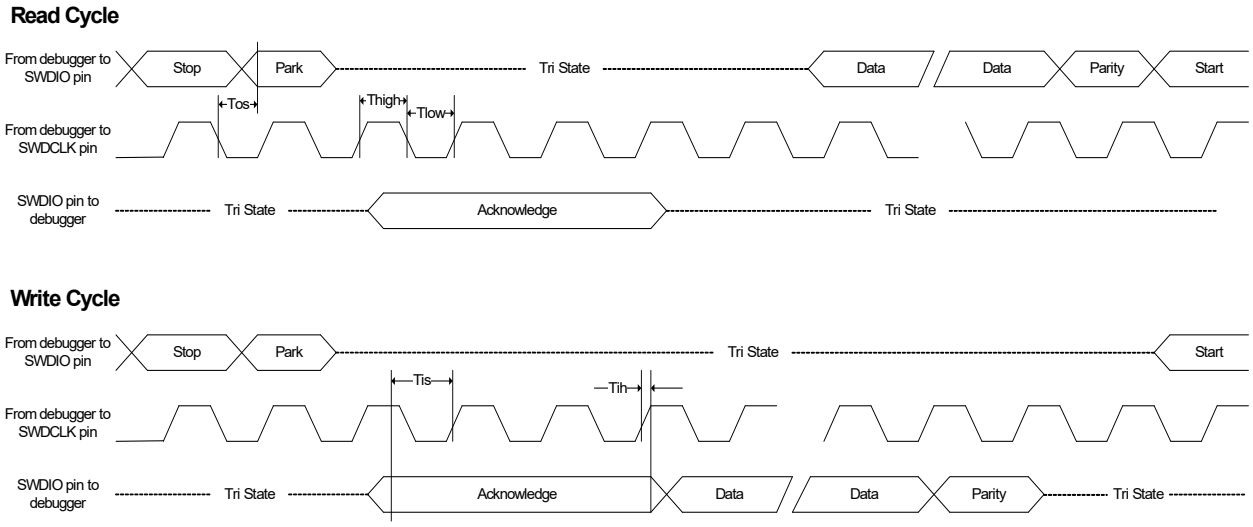

Table 37-70. SWD Timings(1)

Symbol	Parameter	Conditions	Min.	Max.	Units
T_{high}	SWDCLK High period	V_{VDDIO} from 3.0 V to 3.6 V, maximum external capacitor = 40 pF	10	500000	ns
T_{low}	SWDCLK Low period		10	500000	
T_{os}	SWDIO output skew to falling edge SWDCLK		-5	5	
T_{is}	Input Setup time required between SWDIO		4	-	
T_{ih}	Input Hold time required between SWDIO and rising edge SWDCLK		1	-	

Note: 1. These values are based on simulation. These values are not covered by test limits in production or characterization.

37.16.5 I²S Timing

Figure 37-24. I²S Timing Host Mode

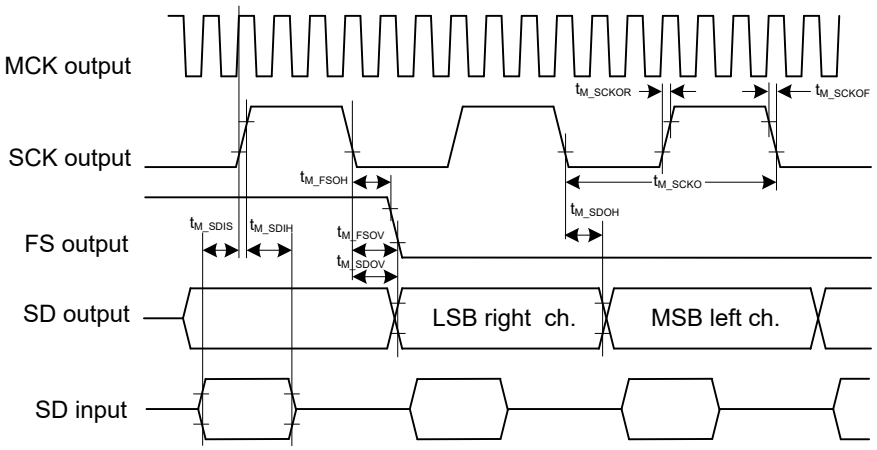

Downloaded from Arrow.com.

Figure 37-25. I²S Timing Client Mode

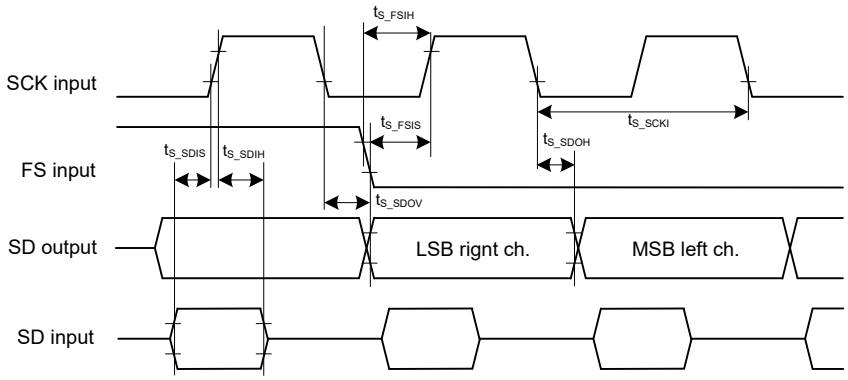

Figure 37-26. I2S Timing PDM2 Mode

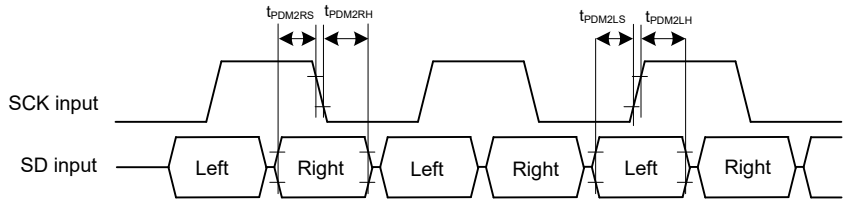

Table 37-71. I2S Timing Characteristics and Requirements (Device Variant A)

Name	Description	Mode	VDD=1.8V			VDD=3.3V			Units
			Min.	Typ.	Max	Min.	Typ.	Max.	
t_{M_MCKOR}	I2S MCK rise time(3)	Host mode / Capacitive load CL = 15 pF			9.2			4.7	ns
t_{M_MCKOF}	I2S MCK fall time(3)	Host mode / Capacitive load CL = 15 pF			11.5			5.3	ns
d_{M_MCKO}	I2S MCK duty cycle	Host mode	45.4		50	45.4		50	%
d_{M_MCKI}	I2S MCK duty cycle	Host mode, pin is input (1b)		50			50		%
t_{M_SCKOR}	I2S SCK rise time(3)	Host mode / Capacitive load CL = 15 pF			9			4.6	ns
t_{M_SCKOF}	I2S SCK fall time(3)	Host mode / Capacitive load CL = 15 pF			9.7			4.5	ns
d_{M_SCKO}	I2S SCK duty cycle	Host mode	45.6		50	45.6		50	%
f_{M_SCKO},1/ t_{M_SCKO}	I2S SCK frequency	Host mode,Supposing external device response delay is 30ns			8			9.5	MHz
f_{S_SCKI},1/ t_{S_SCKI}	I2S SCK frequency	Client mode,Supposing external device response delay is 30ns			14.4			14.8	MHz
d_{S_SCKO}	I2S SCK duty cycle	Client mode		50			50		%
t_{M_FSOV}	FS valid time	Host mode			4.1			4	ns
t_{M_FSOH}	FS hold time	Host mode	-0.9			-0.9			ns
t_{S_FSIS}	FS setup time	Client mode	2.3			1.5			ns
t_{S_FSIH}	FS hold time	Client mode	0			0			ns

Downloaded from Arrow.com.

.....continued									
Name	Description	Mode	VDD=1.8V			VDD=3.3V			Units
			Min.	Typ.	Max	Min.	Typ.	Max.	
t_{M_SDIS}	Data input setup time	Host mode	34.7			24.5			ns
t_{M_SDIH}	Data input hold time	Host mode	-8.2			-8.2			ns
t_{S_SDIS}	Data input setup time	Client mode	4.6			3.9			ns
t_{S_SDIH}	Data input hold time	Client mode	1.2			1.2			ns
t_{M_SDOV}	Data output valid time	Host transmitter			5.6			4.8	ns
t_{M_SDOH}	Data output hold time	Host transmitter	-0.5			-0.5			ns
t_{S_SDOV}	Data output valid time	Client transmitter			36.2			25.9	ns
t_{S_SDOH}	Data output hold time	Client transmitter	36			25.7			ns
t_{PDM2LS}	Data input setup time	Host mode PDM2 Left	34.7			24.5			ns
t_{PDM2LH}	Data input hold time	Host mode PDM2 Left	-8.2			-8.2			ns
t_{PDM2RS}	Data input setup time	Host mode PDM2 Right	30.5			20.9			ns
t_{PDM2RH}	Data input hold time	Host mode PDM2 Right	-6.7			-6.7			ns

Table 37-72. I2S Timing Characteristics and Requirements (Device Variant B, C and D)

Name	Description	Mode	VDD=1.8V			VDD=3.3V			Units
			Min.	Typ.	Max.	Min.	Typ.	Max.	
t_{M_MCKOR}	I2S MCK rise time(3)	Host mode / Capacitive load CL = 15 pF			9.2			4.7	ns
t_{M_MCKOF}	I2S MCK fall time(3)	Host mode / Capacitive load CL = 15 pF			11.6			5.4	ns
d_{M_MCKO}	I2S MCK duty cycle	Host mode	47.1		50	47.3		50	%
d_{M_MCKI}	I2S MCK duty cycle	Host mode, pin is input (1b)		50			50		%
t_{M_SCKOR}	I2S SCK rise time(3)	Host mode / Capacitive load CL = 15 pF			9			4.6	ns
t_{M_SCKOF}	I2S SCK fall time(3)	Host mode / Capacitive load CL = 15 pF			9.7			4.6	ns
d_{M_SCKO}	I2S SCK duty cycle	Host mode	47		50	47.2		50	%
f_{M_SCKO}, 1/ t_{M_SCKO}	I2S SCK frequency	Host mode, Supposing external device response delay is 30ns			7.8			9.2	MHz
f_{S_SCKI}, $1/t_{S_SCKI}$	I2S SCK frequency	Client mode, Supposing external device response delay is 30ns			12.8			13	MHz
d_{S_SCKO}	I2S SCK duty cycle	Client mode		50			50		%
t_{M_FSOV}	FS valid time	Host mode			2.4			1.9	ns
t_{M_FSOH}	FS hold time	Host mode	-0.1			-0.1			ns
t_{S_FSIS}	FS setup time	Client mode	6			5.3			ns

Downloaded from Arrow.com.

.....continued

Name	Description	Mode	VDD=1.8V			VDD=3.3V			Units
			Min.	Typ.	Max.	Min.	Typ.	Max.	
t_{S_FSIH}	FS hold time	Client mode	0			0			ns
t_{M_SDIS}	Data input setup time	Host mode	36			25.9			ns
t_{M_SDIH}	Data input hold time	Host mode	-8.2			-8.2			ns
t_{S_SDIS}	Data input setup time	Client mode	9.1			8.3			ns
t_{S_SDIH}	Data input hold time	Client mode	3.8			3.7			ns
t_{M_SDOV}	Data output valid time	Host transmitter			2.5			1.9	ns
t_{M_SDOH}	Data output hold time	Host transmitter	-0.1			-0.1			ns
t_{S_SDOV}	Data output valid time	Client transmitter			29.8			19.7	ns
t_{S_SDOH}	Data output hold time	Client transmitter	29.1			18.9			ns
t_{PDM2LS}	Data input setup time	Host mode PDM2 Left	35.5			25.3			ns
t_{PDM2LH}	Data input hold time	Host mode PDM2 Left	-8.2			-8.2			ns
t_{PDM2RS}	Data input setup time	Host mode PDM2 Right	30.6			21.1			ns
t_{PDM2RH}	Data input hold time	Host mode PDM2 Right	-7			-7			ns

Notes:

1. All timing characteristics given for 15pF capacitive load.
2. These values are based on simulations and not covered by test limits in production.
3. See 37.9 I/O Pin Characteristics

Downloaded from Arrow.com.

38. Electrical Characteristics at 105°C

38.1 Disclaimer

All typical values are measured at T = 25°C unless otherwise specified. All minimum and maximum values are valid across operating temperature and voltage unless otherwise specified.

38.2 Absolute Maximum Ratings

Stresses beyond those listed in table below may cause permanent damage to the device. This is a stress rating only and functional operation of the device at these or other conditions beyond those indicated in the operational sections of this specification is not implied. Exposure to absolute maximum rating conditions for extended periods may affect device reliability.

Table 38-1. Absolute Maximum Ratings

Symbol	Parameter	Condition	Min.	Max.	Units
V_{DD}	Power supply voltage		0	3.8	V
I_{DD}	Current into a V_{DD} pin		-	92(1)	mA
I_{GND}	Current out of a GND pin		-	130(1)	mA
V_{PIN}	Pin voltage with respect to GND and V_{DD}		GND-0.3V	V_{DD}+0.3V	V
$T_{storgae}$	Storage temperature		-60	150	°C

1. Maximum source current is 46mA and maximum sink current is 65mA per cluster. A cluster is a group of GPIOs. Also note that each VDD/GND pair is connected to two clusters so current consumption through the pair will be a sum of the clusters source/sink currents.

Related Links

7.2.4 GPIO Clusters

38.3 General Operating Ratings

The device must operate within the ratings listed in the table below in order for all other electrical characteristics and typical characteristics of the device to be valid.

Table 38-2. General Operating Conditions

Symbol	Parameter	Condition	Min.	Typ.	Max.	Units
V_{DD}	Power supply voltage		1.62(1)	3.3	3.63	V
V_{DDANA}	Analog supply voltage		1.62(1)	3.3	3.63	V
T_A	Temperature range		-40	25	105	°C
T_J	Junction temperature		-	-	125	°C

1. With BOD33 disabled. If the BOD33 is enabled, refer to the BOD33 characteristics.

Related Links

38.6.2.1 BOD33 Characteristics

Downloaded from Arrow.com.

38.4 Maximum Clock Frequencies

Table 38-3. Maximum GCLK Generator Output Frequencies

Symbol	Description	Conditions	Max.	Units
$f_{GCLKGEN0}$ / f_{GCLK_MAIN}	GCLK Generator Output Frequency	Undivided	96	MHz
$f_{GCLKGEN1}$				
$f_{GCLKGEN2}$				
$f_{GCLKGEN3}$		Divided	48	MHz
$f_{GCLKGEN4}$				
$f_{GCLKGEN5}$				

Table 38-4. Maximum Peripheral Clock Frequencies

Symbol	Description	Max.	Units
f_{CPU}	CPU clock frequency	48	MHz
f_{AHB}	AHB clock frequency	48	MHz
f_{APBA}	APBA clock frequency	48	MHz
f_{APBB}	APBB clock frequency	48	MHz
f_{APBC}	APBC clock frequency	48	MHz
$f_{GCLK_DFLL48M_REF}$	DFLL48M Reference clock frequency	33	KHz
f_{GCLK_DPLL}	FDPLL96M Reference clock frequency	2	MHz
$f_{GCLK_DPLL_32K}$	FDPLL96M 32k Reference clock frequency	32	KHz
f_{GCLK_WDT}	WDT input clock frequency	48	MHz
f_{GCLK_RTC}	RTC input clock frequency	48	MHz
f_{GCLK_EIC}	EIC input clock frequency	48	MHz
f_{GCLK_USB}	USB input clock frequency	48	MHz
$f_{GCLK_EVSYS_CHANNEL_0}$	EVSYS channel 0 input clock frequency	48	MHz
$f_{GCLK_EVSYS_CHANNEL_1}$	EVSYS channel 1 input clock frequency	48	MHz
$f_{GCLK_EVSYS_CHANNEL_2}$	EVSYS channel 2 input clock frequency	48	MHz
$f_{GCLK_EVSYS_CHANNEL_3}$	EVSYS channel 3 input clock frequency	48	MHz
$f_{GCLK_EVSYS_CHANNEL_4}$	EVSYS channel 4 input clock frequency	48	MHz
$f_{GCLK_EVSYS_CHANNEL_5}$	EVSYS channel 5 input clock frequency	48	MHz
$f_{GCLK_EVSYS_CHANNEL_6}$	EVSYS channel 6 input clock frequency	48	MHz
$f_{GCLK_EVSYS_CHANNEL_7}$	EVSYS channel 7 input clock frequency	48	MHz
$f_{GCLK_EVSYS_CHANNEL_8}$	EVSYS channel 8 input clock frequency	48	MHz
$f_{GCLK_EVSYS_CHANNEL_9}$	EVSYS channel 9 input clock frequency	48	MHz
$f_{GCLK_EVSYS_CHANNEL_10}$	EVSYS channel 10 input clock frequency	48	MHz
$f_{GCLK_EVSYS_CHANNEL_11}$	EVSYS channel 11 input clock frequency	48	MHz

Downloaded from Arrow.com.

.....continued			
Symbol	**Description**	**Max.**	**Units**
$f_{GCLK_SERCOMx_SLOW}$	Common SERCOM slow input clock frequency	48	MHz
$f_{GCLK_SERCOM0_CORE}$	SERCOM0 input clock frequency	48	MHz
$f_{GCLK_SERCOM1_CORE}$	SERCOM1 input clock frequency	48	MHz
$f_{GCLK_SERCOM2_CORE}$	SERCOM2 input clock frequency	48	MHz
$f_{GCLK_SERCOM3_CORE}$	SERCOM3 input clock frequency	48	MHz
$f_{GCLK_SERCOM4_CORE}$	SERCOM4 input clock frequency	48	MHz
$f_{GCLK_SERCOM5_CORE}$	SERCOM5 input clock frequency	48	MHz
f_{GCLK_TCC0}, f_{GCLK_TCC1}	TCC0, TCC1 input clock frequency	96	MHz
f_{GCLK_TCC2}, f_{GCLK_TCC3}, f_{GCLK_TC3}	TCC2, TCC3, TC3 input clock frequency	96	MHz
f_{GCLK_TC4}, f_{GCLK_TC5}	TC4, TC5 input clock frequency	48	MHz
f_{GCLK_TC6}, f_{GCLK_TC7}	TC6, TC7 input clock frequency	48	MHz
f_{GCLK_ADC}	ADC input clock frequency	48	MHz
$f_{GCLK_AC_DIG}$	AC digital input clock frequency	48	MHz
$f_{GCLK_AC_ANA}$	AC analog input clock frequency	64	KHz
$f_{GCLK_AC1_DIG}$	AC1 digital input clock frequency	48	MHz
$f_{GCLK_AC1_ANA}$	AC1 analog input clock frequency	64	KHz
f_{GCLK_DAC}	DAC input clock frequency	48	MHz
f_{GCLK_PTC}	PTC input clock frequency	48	MHz
$f_{GCLK_I2S_0}$	I2S serial 0 input clock frequency	13	MHz
$f_{GCLK_I2S_1}$	I2S serial 1 input clock frequency	13	MHz

38.5 Power Consumption

The values in the below table are measured values of power consumption under the following conditions, except where noted:

- Operating conditions
  - V_{VDDIN} = 3.3 V
- Wake up time from sleep mode is measured from the edge of the wakeup signal to the execution of the first instruction fetched in flash.
- Oscillators
  - XOSC32K (32 kHz crystal oscillator) stopped
  - XOSC (crystal oscillator) running with external 32MHz clock on XIN
  - DFLL48M stopped
- Clocks
  - XOSC used as main clock source, except otherwise specified
  - CPU, AHB clocks undivided
  - APBA clock divided by 4
  - APBB and APBC bridges off
- The following AHB module clocks are running: NVMCTRL, APBA bridge
  - All other AHB clocks stopped

Downloaded from Arrow.com.

- The following peripheral clocks running: PM, SYSCTRL, RTC
  - All other peripheral clocks stopped
- I/Os are inactive with internal pull-up
- CPU is running on flash with 1 wait states
- Cache enabled
- BOD33 disabled

Table 38-5. Current Consumption (Silicon Revisions A, B, C, D, E, and F)

Mode	Conditions	T_A	Min.	Typ.	Max.	Units
ACTIVE	CPU running a While(1) algorithm	105°C	-	2.55	2.75	mA
	CPU running a While(1) algorithm V_{DDIN}=1.8V, CPU is running on Flash with 3 wait states		-	2.56	2.82	
	CPU running a While(1) algorithm, CPU is running on Flash with 3 wait states with GCLKIN as reference		-	42*freq +318	42*freq +432	µA (with freq in MHz)
	CPU running a Fibonacci algorithm		-	4.21	4.59	mA
	CPU running a Fibonacci algorithm V_{DDIN}=1.8V, CPU is running on flash with 3 wait states		-	4.23	4.57	
	CPU running a Fibonacci algorithm, CPU is running on Flash with 3 wait states with GCLKIN as reference		-	80*freq +320	82*freq +432	µA (with freq in MHz)
	CPU running a CoreMark algorithm		-	6.02	6.54	mA
	CPU running a CoreMark algorithm V_{DDIN}=1.8V, CPU is running on flash with 3 wait states		-	5.21	5.57	
	CPU running a CoreMark algorithm, CPU is running on Flash with 3 wait states with GCLKIN as reference		-	96*freq +322	98*freq +432	µA (with freq in MHz)
IDLE0			-	1.55	1.62	mA
IDLE1			-	1.13	1.18	
IDLE2			-	0.96	1.01	
STANDBY (rev. E silicon)	XOSC32K running / RTC running at 1kHz(1)	105°C	-	214	627	µA
	XOSC32K and RTC stopped (1)	105°C	-	212	624	
STANDBY (rev. F silicon)	XOSC32K running / RTC running at 1kHz (1)	105°C	-	175	452	µA
	XOSC32K and RTC stopped (1)	105°C	-	173	450	

Downloaded from Arrow.com.

Note:

1. Measurements were done with SYSCTRL->VREG.bit.RUNSTDBY = 1

Table 38-6. Current Consumption (Silicon Revision G)

Mode	conditions	Ta	Vcc	Typ.	Max.	Units
ACTIVE	CPU running a While 1 algorithm	105°C	3.3V	3.3	3.6	mA
		105°C	1.8V	3.3	3.6	
	CPU running a While 1 algorithm, with GCLKIN as reference	105°C	3.3V	56*Freq+254	55*Freq+596	
	CPU running a Fibonacci algorithm	105°C	3.3V	4.2	4.6	
		105°C	1.8V	4.3	4.7	
	CPU running a Fibonacci algorithm, with GCLKIN as reference	105°C	3.3V	75*Freq+254	73*Freq+594	
	CPU running a CoreMark algorithm	105°C	3.3V	4.9	5.4	
		105°C	1.8V	4.7	5.1	
	CPU running a CoreMark algorithm, with GCLKIN as reference	105°C	3.3V	87*Freq+257	86*Freq+597	
IDLE0		105°C	3.3V	1.8	2.1	
IDLE1		105°C	3.3V	1.2	1.5	
IDLE2		105°C	3.3V	1.0	1.2	
STANDBY	XOSC32K running, RTC running at 1kHz RTC running at 1kHz (1)	105°C	3.3V	175.0	452.0	µA
	XOSC32K and RTC stopped (1)	105°C	3.3V	173.0	450.0	

Note: Measurements done with VREG.bit.RUNSTDBY = 1.

Table 38-7. Wake-up Time

Mode	Conditions	T_A	Min.	Typ.	Max.	Units
IDLE0	OSC8M used as main clock source, Cache disabled	105°C	3.8	4	4.1	µs
IDLE1	OSC8M used as main clock source, Cache disabled		12.8	14.3	15.7	
IDLE2	OSC8M used as main clock source, Cache disabled		13.7	15.2	16.6	
STANDBY	OSC8M used as main clock source, Cache disabled		18.7	20.1	21.6	

Downloaded from Arrow.com.

Figure 38-1. Measurement Schematic

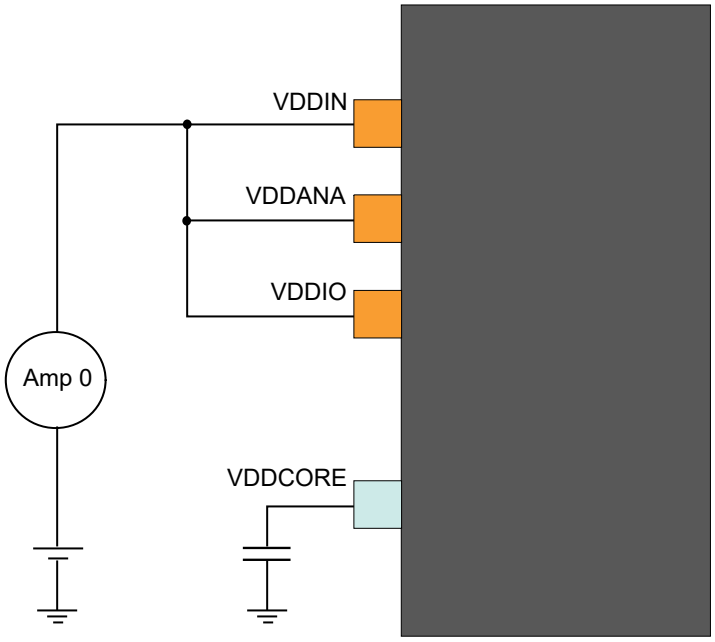

38.6 Analog Characteristics

38.6.1 Power-On Reset (POR) Characteristics

Table 38-8. POR Characteristics

Symbol	Parameter	Conditions	Min.	Typ.	Max.	Units
V_{POT+}	Voltage threshold on V_{DD} rising	IV_{DD} falls at 1V/ms or slower	1.27	1.45	1.58	V
V_{POT-}	Voltage threshold on V_{DD} falling		0.72	0.99	1.32	V

Downloaded from Arrow.com.

Figure 38-2. POR Operating Principle

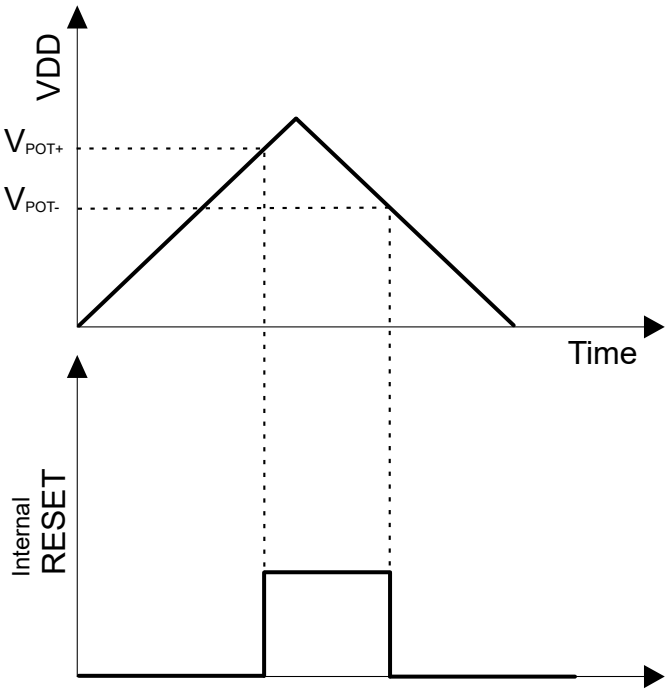

38.6.2 Brown-Out Detectors Characteristics

38.6.2.1 BOD33 Characteristics

Table 38-9. BOD33 Characteristics

Symbol	Parameter	Conditions	Temp.	Min.	Typ.	Max.	Units
I	Step size, between adjacent values in BOD33.LEVEL			-	34	-	mV
V_{HYST}	VBOD+ - VBOD-	Hysteresis ON		35	-	170	mV
t_{DET}	Detection time	Time with $V_{DDANA} < V_{TH}$ necessary to generate a reset signal		-	0.9(1)	-	µs
$I_{IdleBOD33}$	Current consumption om Active/Idle mode	Continuous mode	25°C	-	25	48	µA
			-40- to 105°C	-	-	51	
		Sampling mode	25°C	-	0.034	0.21	
			-40- to 105°C	-	-	2.44	
$I_{SbyBOD33}$	Current consumption in Standby mode	Sampling mode	25°C		0.132	0.38	µA
			-40- to 105°C			1.5	
$t_{STARTUP}$	Startup time		-40- to 105°C	-	2.2(1)	-	µs

1. These values are based on simulation. These values are not covered by test limits in production or characterization.

Downloaded from Arrow.com.

38.6.3 Analog-to-Digital Converter (ADC) Characteristics

Table 38-10. Operating Conditions

Symbol	Parameter	Conditions	Min.	Typ.	Max.	Units
VDDANA	Power supply voltage	T > 85°C	2.7	-	3.6	V
RES	Resolution	-	8	-	12	bits
f_{CLK_ADC}	ADC Clock frequency	-	30	-	2100	kHz
	Sample rate(1)	Single shot	5	-	300	ksps
		Free running	5	-	350	ksps
	Sampling time(1)	-	250	-	-	ns
	Sampling time with DAC as input(2)	-	3	-	-	µs
	Sampling time with Temp sens as input(2)	-	10	-	-	µs
	Sampling time with Bandgap as input(2)	-	10	-	-	µs
	Conversion time(1)	1x Gain	6	-	-	cycles
V_{REF}	Voltage reference range (VREFA or VREFB)	-	1.0	-	V_{DDANA}-0.6	V
INT1V	Internal 1V reference (2,4)	-	-	1.0	-	V
INTVCC0	Internal ratiometric reference 0(2)	-	-	V_{DDANA}/1.48	-	V
INTVCC0 Voltage Error	Internal ratiometric reference 0(2) error	2.0V < V_{DDANA}<3.63V	-1.0	-	+1.0	%
INTVCC1	Internal ratiometric reference 1(2)	V_{DDANA}>2.0V	-	V_{DDANA}/2	-	V
INTVCC1 Voltage Error	Internal ratiometric reference 1(2) error	2.0V < V_{DDANA}<3.63V	-1.0	-	+1.0	%
	Conversion range(1)	Differential mode	-V_{REF}/ GAIN	-	+V_{REF}/GAIN	V
		Single-ended mode	0.0	-	+V_{REF}/GAIN	V
C_{SAMPLE}	Sampling capacitance(2)	-	-	3.5	-	pF
R_{SAMPLE}	Input channel source resistance(2)	-	-	-	3.5	kΩ
I_{DD}	DC supply current(1)	f_{CLK_ADC} = 2.1-MHz(3)	-	1.25	1.83	mA

1. These values are based on characterization. These values are not covered by test limits in production.
2. These values are based on simulation. These values are not covered by test limits in production or characterization.
3. In this condition and for a sample rate of 350ksps, a conversion takes 6 clock cycles of the ADC clock (conditions: 1X gain, 12-bit resolution, differential mode, free-running).
4. It is the buffered internal reference of 1.0V derived from the internal 1.1V bandgap reference.

Downloaded from Arrow.com.

Table 38-11. Differential Mode

Symbol	Parameter	Conditions	Min.	Typ.	Max.	Units
ENOB	Effective Number Of Bits	With gain compensation	-	10.5	10.8	bits
TUE	Total Unadjusted Error	1x Gain	1.5	2.7	13	LSB
INL	Integral Non Linearity	1x Gain	0.9	1.3	4	LSB
DNL	Differential Non Linearity	1x Gain	+/-0.3	+/-0.5	+/-0.95	LSB
GE	Gain Error	Ext. Ref 1x	-10.0	-1.3	+10.0	mV
		$V_{REF} = V_{DDANA}/1.48$	-20.0	-10.0	+10.0	mV
		VREF = INT1V	-20.0	+2	+20.0	mV
	Gain Accuracy(5)	Ext. Ref. 0.5x	+/-0.02	+/-0.05	+/-0.2	%
		Ext. Ref. 2x to 16x	+/-0.01	+/-0.03	+/-0.5	%
OE	Offset Error	Ext. Ref. 1x	-8.0	-1.0	+8.0	mV
		$V_{REF} = V_{DDANA}/1.48$	-8.0	-0.60	+8.0	mV
		VREF = INT1V	-6.0	-1.0	+6.0	mV
SFDR	Spurious Free Dynamic Range	1x Gain F_{CLK_ADC} = 2.1 MHz F_{IN} = 40 kHz A_{IN} = 95% FSR	65.0	71.5	76.0	dB
SINAD	Signal-to-Noise and Distortion		58.0	65.0	67.0	dB
SNR	Signal-to-Noise Ratio		60.0	66.0	68.6	dB
THD	Total Harmonic Distortion		-75.0	-71.0	-67.0	dB
	Noise RMS	T = 25°C	0.6	1.0	1.6	mV

1. Maximum numbers are based on characterization and not tested in production, and valid for 5% to 95% of the input voltage range.
2. Dynamic parameter numbers are based on characterization and not tested in production.
3. Respect the input common mode voltage through the following equations (where, VCM_IN is the Input channel common mode voltage):
   a. If |VIN| > VREF/4
      - VCM_IN < 0.95*VDDANA + VREF/4 – 0.75V
      - VCM_IN > VREF/4 -0.05*VDDANA -0.1V
   b. If |VIN| < VREF/4
      - VCM_IN < 1.2*VDDANA - 0.75V
      - VCM_IN > 0.2*VDDANA - 0.1V
4. The ADC channels on pins PA08, PA09, PA10, PA11 are powered from the VDDIO power supply. The ADC performance of these pins will not be the same as all the other ADC channels on pins powered from the VDDANA power supply.
5. The gain accuracy represents the gain error expressed in percent. Gain accuracy (%) = (Gain Error in V x 100) / (2*Vref/GAIN)

Table 38-12. Single-Ended Mode

Symbol	Parameter	Conditions	Min.	Typ.	Max.	Units
ENOB	Effective Number of Bits	With gain compensation	-	9.7	10.1	Bits
TUE	Total Unadjusted Error	1x gain	-	7.9	30.0	LSB
INL	Integral Non-Linearity	1x gain	1.4	2.6	5.0	LSB
DNL	Differential Non-Linearity	1x gain	+/-0.6	+/-0.7	+/-0.95	LSB

Downloaded from Arrow.com.

.....continued						
Symbol	**Parameter**	**Conditions**	**Min.**	**Typ.**	**Max.**	**Units**
GE	Gain Error	Ext. Ref. 1x	-5.0	0.6	5.0	mV
	Gain Accuracy(4)	Ext. Ref. 0.5x	+/-0.1	+/-0.37	+/-0.5	%
		Ext. Ref. 2x to 16X	+/-0.01	+/-0.1	+/-0.2	%
OE	Offset Error	Ext. Ref. 1x	-5.0	0.6	10.0	mV
SFDR	Spurious Free Dynamic Range	1x Gain F_{CLK_ADC} = 2.1 MHz F_{IN} = 40 kHz A_{IN} = 95% FSR	63.0	68.0	70.1	dB
SINAD	Signal-to-Noise and Distortion		55.0	60.1	62.5	dB
SNR	Signal-to-Noise Ratio		54.0	61.0	64.0	dB
THD	Total Harmonic Distortion		-70.0	-68.0	-65.0	dB
	Noise RMS	T = 25°C	-	1.0	-	mV

1. Maximum numbers are based on characterization and not tested in production, and for 5% to 95% of the input voltage range.
2. Respect the input common mode voltage through the following equations (where VCM_IN is the Input channel common mode voltage) for all VIN:
   – VCM_IN < 0.7*VDDANA + VREF/4 – 0.75V
   – VCM_IN > VREF/4 – 0.3*VDDANA - 0.1V
3. The ADC channels on pins PA08, PA09, PA10, PA11 are powered from the VDDIO power supply. The ADC performance of these pins will not be the same as all the other ADC channels on pins powered from the VDDANA power supply.
4. The gain accuracy represents the gain error expressed in percent. Gain accuracy (%) = (Gain Error in V x 100) / (Vref/GAIN)

38.6.3.1 Performance with the Averaging Digital Feature

Averaging is a feature which increases the sample accuracy. ADC automatically computes an average value of multiple consecutive conversions. The numbers of samples to be averaged is specified by the Number-of-Samples-to-be-collected bit group in the Average Control register (AVGCTRL.SAMPLENUM[3:0]) and the averaged output is available in the Result register (RESULT).

Table 38-13. Averaging Feature

Average Number	Condition	SNR(dB)	SINAD(dB)	SFDR(dB)	ENOB(bits)
1	In differential mode, 1x gain, VDDANA=3.0V, VREF=1.0V, 350kSps at 25°C	66	65	72.8	10.5
8		67.6	65.8	75.1	10.62
32		69.7	67.1	75.3	10.85
128		70.4	67.5	75.5	10.91

38.6.3.2 Performance with the hardware offset and gain correction

Inherent gain and offset errors affect the absolute accuracy of the ADC. The offset error cancellation is handled by the Offset Correction register (OFFSETCORR) and the gain error cancellation, by the Gain Correction register (GAINCORR). The offset and gain correction value is subtracted from the converted data before writing the Result register (RESULT).

Downloaded from Arrow.com.

Table 38-14. Offset and Gain Correction Feature

Gain Factor	Conditions	Offset Error (mV)	Gain Error (mV)	Total Unadjusted Error (LSB)
0.5x	In differential mode, 1x gain, VDDANA=3.0V, VREF=1.0V, 350kSps at 25°C	0.25	1	2.4
1x		0.2	0.1	1.5
2x		0.15	-0.15	2.7
8x		-0.05	0.05	3.2
16x		0.1	-0.05	6.1

38.6.3.3 Inputs and Sample and Hold Acquisition Times

The analog voltage source must be able to charge the sample and hold (S/H) capacitor in the ADC in order to achieve maximum accuracy. Seen externally the ADC input consists of a resistor (R_{SAMPLE}) and a capacitor (C_{SAMPLE}). In addition, the source resistance (R_{SOURCE}) must be taken into account when calculating the required sample and hold time. The figure below shows the ADC input channel equivalent circuit.

Figure 38-3. ADC Input

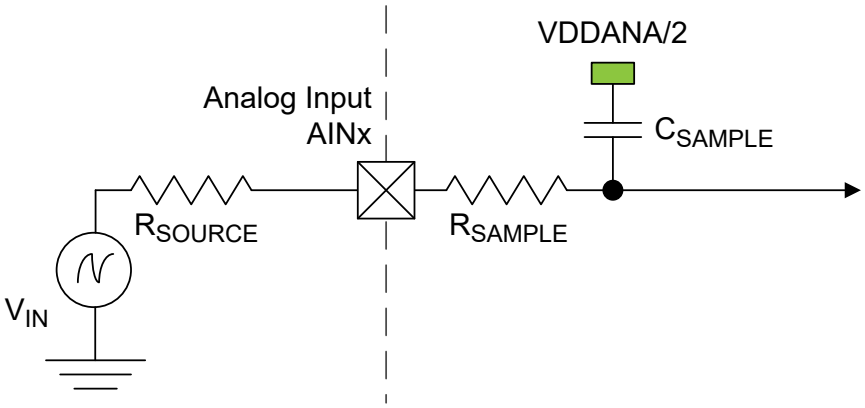

To achieve n bits of accuracy, the C_{SAMPLE} capacitor must be charged at least to a voltage of

$$V_{CSAMPLE} \geq V_{IN} \times \left(1 - 2^{-(n+1)}\right)$$

The minimum sampling time $t_{SAMPLEHOLD}$ for a given R_{SOURCE}can be found using this formula:

$$t_{SAMPLEHOLD} \geq (R_{SAMPLE} + R_{SOURCE}) \times (C_{SAMPLE}) \times (n+1) \times \ln(2)$$

for a 12 bits accuracy: $t_{SAMPLEHOLD} \geq (R_{SAMPLE} + R_{SOURCE}) \times (C_{SAMPLE}) \times 9.02$

38.6.4 Digital to Analog Converter (DAC) Characteristics

Table 38-15. Operating Conditions

Symbol	Parameter	Conditions	Min.	Typ.	Max.	Units
V_{DDANA}	Analog supply voltage	-	1.62	-	3.63	V
AV_{REF}	External reference voltage	-	1.0	-	V_{DDANA}-0.6	V
	INT1V(3)	-	-	1	-	V
	VDDANA	-	-	V_{DDANA}	-	V
	Linear output voltage range	-	0.05	-	V_{DDANA}-0.05	V
	Minimum resistive load	-	5	-	-	kΩ

Downloaded from Arrow.com.

.....continued						
Symbol	Parameter	Conditions	Min.	Typ.	Max.	Units
	Maximum capacitance load	-	-	-	100	pF
I_{DD}	DC supply current(2)	Voltage pump disabled	-	160	245	µA

Notes:

1. These values are based on specifications otherwise noted.
2. These values are based on characterization, and are not covered by test limits in production.
3. It is the buffered internal reference of 1.0V derived from the internal 1.1V bandgap reference.

Table 38-16. Clock and Timing

Symbol	Parameter	Conditions		Min.	Typ.	Max.	Units
	Conversion rate	C_{load} = 100 pF R_{load} > 5 kΩ	Normal mode	-	-	350	ksps
			For Δ_{DATA} = +/-1	-	-	1000	
	Startup time	V_{DDNA} > 2.6V		-	-	2.85	µs
		V_{DDNA} < 2.6V		-	-	10	µs

Note:

1. These values are based on simulation, and are not covered by test limits in production or characterization.

Table 38-17. Accuracy Characteristics

Symbol	Parameter	Conditions		Min.	Typ.	Max.	Units
RES	Input resolution	-		-	-	10	Bits
INL	Integral non-linearity	V_{REF} = Ext 1.0V	V_{DD} = 1.6V	0.7	0.75	2.0	LSB
			V_{DD} = 3.6V	0.6	0.65	1.5	
		V_{REF} = V_{DDANA}	V_{DD} = 1.6V	0.6	0.85	2.0	
			V_{DD} = 3.6V	0.5	0.8	1.5	
		V_{REF} = INT1V	V_{DD} = 1.6V	0.5	0.75	1.5	
			V_{DD} = 3.6V	0.7	0.8	1.5	
DNL	Differential non-linearity	V_{REF} = Ext 1.0V	V_{DD} = 1.6V	+/-0.3	+/-0.4	+/-1.0	LSB
			V_{DD} = 3.6V	+/-0.25	+/-0.4	+/-0.75	
		V_{REF} = V_{DDANA}	V_{DD} = 1.6V	+/-0.4	+/-0.55	+/-1.5	
			V_{DD} = 3.6V	+/-0.2	+/-0.3	+/-0.75	
		V_{REF} = INT1V	V_{DD} = 1.6V	+/-0.5	+/-0.7	+/-1.5	
			V_{DD} = 3.6V	+/-0.4	+/-0.7	+/-1.5	
GE	Gain error	Ext. V_{REF}		+/-0.5	+/-5	+/-12	mV
OE	Offset error	Ext. V_{REF}		+/-2	+/-1.5	+/-8	mV

Note:

1. All values measured using a conversion rate of 35 ksps.

Downloaded from Arrow.com.

38.6.5 Analog Comparator Characteristics

Table 38-18. Electrical and Timing Characteristics

Symbol	Parameter	Conditions	Min.	Typ.	Max.	Units
	Positive input voltage range		0	-	V_{DDANA}	V
	Negative input voltage range		0	-	V_{DDANA}	
	Offset	Hysteresis = 0, Fast mode	-15	0.0	+15	mV
		Hysteresis = 0, Low power mode	-25	0.0	+25	mV
	Hysteresis	Hysteresis = 1, Fast mode	20	50	85	mV
		Hysteresis = 1, Low power mode	15	40	75	mV
	Propagation delay	Changes for $V_{ACM}=V_{DDANA}/2$ 100mV overdrive, Fast mode	-	90	180	ns
		Changes for $V_{ACM}=V_{DDANA}/2$ 100mV overdrive, Low power mode	-	282	520	ns
$t_{STARTUP}$	Startup time	Enable to ready delay Fast mode	-	1	2.6	µs
		Enable to ready delay Low power mode	-	14	22	µs
V_{SCALE}	INL(3)		-1.4	0.75	1.4	LSB
	DNL(3)		-0.9	0.25	0.9	LSB
	Offset Error (1)(2)		-0.20	0.26	+0.92	LSB
	Gain Error (1)(2)		-0.89	0.215	0.89	LSB

1. According to the standard equation $V(X)=V_{LSB}*(X+1)$; $V_{LSB}=V_{DDANA}/64$
2. Data computed with the Best Fit method
3. Data computed using histogram

38.7 NVM Characteristics

Note that on this flash technology, a max number of four consecutive write is allowed per row. Once this number is reached, a row erase is mandatory.

Table 38-19. Flash Endurance and Data Retention

Symbol	Parameter	Conditions	Min.	Typ.	Max.	Units
Ret_{NVM25k}	Retention after up to 25k	Average ambient 55°C	10	50	-	Years
$Ret_{NVM2.5k}$	Retention after up to 2.5k	Average ambient 55°C	20	100	-	Years
Ret_{NVM100}	Retention after up to 100	Average ambient 55°C	25	>100	-	Years
Cyc_{NVM}	Cycling Endurance(1)	-40°C < Ta < 105°C	25k	150k	-	Cycles

1. An endurance cycle is a write and an erase operation.

Table 38-20. EEPROM Emulation(1), Endurance and Data Retention

Symbol	Parameter	Conditions	Min.	Typ.	Max.	Units
$Ret_{EEPROM100k}$	Retention after up to 100k	Average ambient 55°C	10	50	-	Years

Downloaded from Arrow.com.

.....continued						
Symbol	Parameter	Conditions	Min.	Typ.	Max.	Units
$Ret_{EEPROM10k}$	Retention after up to 10k	Average ambient 55°C	20	100	-	Years
Cyc_{EEPROM}	Cycling Endurance(2)	-40°C < Ta < 105°C	100k	600k	-	Cycles

1. The EEPROM emulation is a software emulation described in the App note AT03265.
2. An endurance cycle is a write and an erase operation.

38.8 Oscillators Characteristics

38.8.1 Crystal Oscillator (XOSC) Characteristics

38.8.1.1 Digital Clock Characteristics

The following table describes the characteristics for the oscillator when a digital clock is applied on XIN.

Table 38-21. Digital Clock Characteristics

Symbol	Parameter	Conditions	Min.	Typ.	Max.	Units
f_{CPXIN}	XIN clock frequency		-	-	32	MHz

38.8.1.2 Crystal Oscillator Characteristics

The following table describes the characteristics for the oscillator when a crystal is connected between XIN and XOUT as shown in Figure 38-4. The user must choose a crystal oscillator where the crystal load capacitance C_L is within the range given in the table. The exact value of C_L can be found in the crystal data sheet. The capacitance of the external capacitors (C_{LEXT}) can then be computed as follows:

Load Capacitance Equation

$C_{LOAD} = ([C_{XIN} + C_{LEXT}] * [C_{XOUT} + C_{LEXT}]) / ([C_{XIN} + C_{LEXT} + C_{LEXT} + C_{XOUT}]) + C_{STRAY}$

Where:

C_{LOAD} = Crystal Mfg. C_{LOAD} specification

C_{XIN} = XOSC XIN pin data sheet specification

C_{XOUT} = XOSC XOUT pin data sheet specification

C_{LEXT} = Required external crystal load capacitor

C_{STRAY} (Osc PCB capacitance) = 1.5 pf per 12.5 mm (0.5 inches) (TRACE W = 0.175 mm, H = 36 µm, T = 113 µm)

Table 38-22. Crystal Oscillator Characteristics

Symbol	Parameter	Conditions	Min.	Typ.	Max.	Units
f_{OUT}	Crystal oscillator frequency		0.4	-	32	MHz

Downloaded from Arrow.com.

.....continued

Symbol	Parameter	Conditions	Min.	Typ.	Max.	Units
ESR	Crystal Equivalent Series Resistance Safety Factor = 3 The AGC doesn't have any noticeable impact on these measurements.	f = 0.455 MHz, C_L = 100pF XOSC.GAIN = 0	-	-	5.6K	Ω
		f = 2MHz, C_L = 20pF XOSC.GAIN = 0	-	-	416	
		f = 4MHz, C_L = 20pF XOSC.GAIN = 1	-	-	243	
		f = 8 MHz, C_L = 20pF XOSC.GAIN = 2	-	-	138	
		f = 16 MHz, C_L = 20pF XOSC.GAIN = 3	-	-	66	
		f = 32MHz, C_L = 18pF XOSC.GAIN = 4	-	-	56	
C_{XIN}	Parasitic capacitor load		-	5.9	-	pF
C_{XOUT}	Parasitic capacitor load		-	3.2	-	pF
I_{XOSC}	Current Consumption	f = 2MHz, C_L = 20pF, AGC off		65	87	µA
		f = 2MHz, C_L = 20pF, AGC on		52	76	
		f = 4MHz, C_L = 20pF, AGC off		117	155	
		f = 4MHz, C_L = 20pF, AGC on		74	104	
		f = 8MHz, C_L = 20pF, AGC off		226	308	
		f = 8MHz, C_L = 20pF, AGC on		128	180	
		f = 16MHz, C_L = 20pF, AGC off		502	714	
		f = 16MHz, C_L = 20pF, AGC on		307	590	
		f = 32MHz, C_L = 18pF, AGC off		1622	2257	
		f = 32MHz, C_L = 18pF, AGC on		615	1280	
$t_{STARTUP}$	Startup time	f = 2MHz, C_L = 20pF, XOSC.GAIN = 0, ESR = 600Ω	-	14K	48K	cycles
		f = 4MHz, C_L = 20pF, XOSC.GAIN = 1, ESR = 100Ω	-	6800	19.5K	
		f = 8 MHz, C_L = 20pF, XOSC.GAIN = 2, ESR = 35Ω	-	5550	13K	
		f = 16 MHz, C_L = 20pF, XOSC.GAIN = 3, ESR = 25Ω	-	6750	14.5K	
		f = 32MHz, C_L = 18pF, XOSC.GAIN = 4, ESR = 40Ω	-	5.3K	9.6K	

Downloaded from Arrow.com.

Figure 38-4. Crystal Oscillator Connection

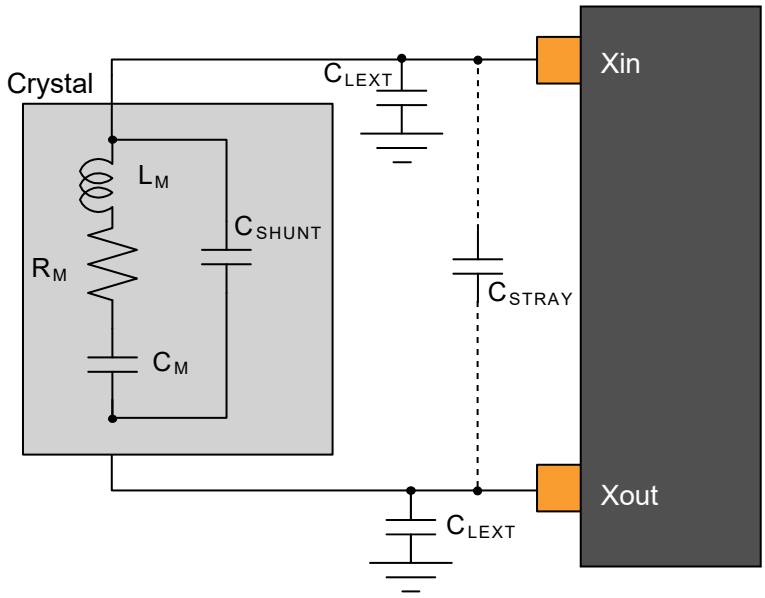

38.8.2 External 32 kHz Crystal Oscillator (XOSC32K) Characteristics

38.8.2.1 Digital Clock Characteristics

The following table describes the characteristics for the oscillator when a digital clock is applied on XIN32 pin.

Table 38-23. Digital Clock Characteristics

Symbol	Parameter	Conditions	Min.	Typ.	Max.	Units
$f_{CPXIN32}$	XIN32 clock frequency		-	32.768	-	kHz
	XIN32 clock duty cycle		-	50	-	%

38.8.2.2 Crystal Oscillator Characteristics

Figure 38-4 and the equation in 38.8.1.2 Crystal Oscillator Characteristics also applies to the 32 kHz oscillator connection. The user must choose a crystal oscillator where the crystal load capacitance C_L is within the range given in the table. The exact value of C_L can be found in the crystal datasheet.

Table 38-24. 32kHz Crystal Oscillator Characteristics

Symbol	Parameter	Conditions	Min.	Typ.	Max.	Units
f_{OUT}	Crystal oscillator frequency	I	-	32768	-	Hz
$t_{STARTUP}$	Startup time	ESR_{XTAL} = 39.9 kΩ, C_L = 12.5 pF	-	28K	30K	cycles
C_L	Crystal load capacitance	I	-	-	12.5	pF
C_{SHUNT}	Crystal shunt capacitance	I	-	0.1	-	
C_{XIN32}	Parasitic capacitor load		-	3.2	-	
C_{XOUT32}	Parasitic capacitor load		-	3.7	-	
$I_{XOSC32K}$	Current consumption		-	1.22	2.2	µA
ESR	Crystal equivalent series resistance f=32.768kHz Safety Factor = 3	C_L=12.5pF	-	-	100	kΩ

Downloaded from Arrow.com.

38.8.3 Digital Frequency Locked Loop (DFLL48M) Characteristics

Table 38-25. DFLL48M Characteristics - Open Loop Mode

Symbol	Parameter	Conditions	Min.	Typ.	Max.	Units
f_{OUT}	Output frequency	IDFLLVAL.COARSE = DFLL48M COARSE CAL DFLLVAL.FINE = 512	47	48	49	MHz
I_{DFLL}	Power consumption on V_{DDIN}	IDFLLVAL.COARSE = DFLL48M COARSE CAL DFLLVAL.FINE = 512	-	403	453	µA
$t_{STARTUP}$	Startup time	DFLLVAL.COARSE = DFLL48M COARSE CAL DFLLVAL.FINE = 512 f_{OUT} within 90 % of final value		8	9	µs

Note: 1. DFLL48M in Open loop after calibration at room temperature.

Table 38-26. DFLL48M Characteristics - Closed Loop Mode

Symbol	Parameter	Conditions	Min.	Typ.	Max.	Units
f_{OUT}	Average Output frequency	fREF = 32.768kHz	47.76	48	48.24	MHz
f_{REF}	Reference frequency	I	0.732	32.768	33	kHz
Jitter	Period Jitter	fREF = 32.768kHz	-	-	0.42	ns
I_{DFLL}	Power consumption on V_{DDIN}	fREF = 32.768kHz	-	403	453	µA
t_{LOCK}	Lock time	fREF = 32.768kHz DFLLVAL.COARSE = DFLL48M COARSE CAL DFLLVAL.FINE = 512 DFLLCTRL.BPLCKC = 1 DFLLCTRL.QLDIS = 0 DFLLCTRL.CCDIS = 1 DFLLMUL.FSTEP = 10		200	500	µs

38.8.4 32.768 kHz Internal oscillator (OSC32K) Characteristics

Table 38-27. 32 kHz RC Oscillator Characteristics

Symbol	Parameter	Conditions	Min.	Typ.	Max.	Units
f_{OUT}	Output frequency	Calibrated against a 32.768 kHz reference at 25°C, over [-40, +105]°C, over [1.62, 3.63]V	28.508	32.768	35.132	kHz
		Calibrated against a 32.768 kHz reference at 25°C, at V_{DD} = 3.3V	32.276	32.768	33.260	
		Calibrated against a 32.768 kHz reference at 25°C, over [1.62, 3.63]V	31.457	32.768	34.079	
I_{OSC32K}	Current consumption	I	-	0.67	1.9	µA
$t_{STARTUP}$	Startup time	I	-	1	2	cycle
Duty	Duty Cycle	I	-	50	-	%

Downloaded from Arrow.com.

38.8.5 Ultra Low-Power Internal 32 kHz RC Oscillator (OSCULP32K) Characteristics

Table 38-28. Ultra Low-Power Internal 32 kHz RC Oscillator Characteristics

Symbol	Parameter	Conditions	Min.	Typ.	Max.	Units
f_{OUT}	Output frequency	Calibrated against a 32.768 kHz reference at 25°C, over [-40, +105]°C, over [1.62, 3.63]V	25.559	32.768	40.305	kHz
		Calibrated against a 32.768 kHz reference at 25°C, at V_{DD} = 3.3V	31.293	32.768	34.570	
		Calibrated against a 32.768 kHz reference at 25°C, over [1.62, 3.63]V	31.293	32.768	34.570	
Duty	Duty cycle		-	50	-	%

1. These values are based on simulation, and not covered by test limits in production or characterization.
2. This oscillator is always on.

38.8.6 8 MHz RC Oscillator (OSC8M) Characteristics

Table 38-29. Internal 8 MHz RC Oscillator Characteristics

Symbol	Parameter	Conditions	Min.	Typ.	Max.	Units
f_{OUT}	Output frequency	ICalibrated against a 8 MHz reference at 25°C, over [-40, +105]°C, over [1.62, 3.63]V	7.65	8	8.17	MHz
		Calibrated against a 8 MHz reference at 25°C, at V_{DD} = 3.3V	7.94	8	8.06	
		Calibrated against a 8 MHz reference at 25°C, over [1.62, 3.63]V	7.92	8	8.08	
TempCo	Frequency vs. temperature drift		-1.2		1	
SupplyCo	Frequency vs. supply drift		-2		2	
I_{OSC8M}	Current consumption	IIDLEIDLE2 on OSC32K versus IDLE2 on calibrated OSC8M enabled at 8 MHz (FRANGE = 1, PRESC = 0)	-	64	96	µA
$t_{STARTUP}$	Startup time	I	-	2.4	3.3	µs
Duty	Duty cycle	I	-	50	-	%

38.8.7 Fractional Digital Phase Locked Loop (FDPLL96M) Characteristics

Table 38-30. FDPLL96M Characteristics (Variant B and L With Silicon Revision E)

Symbol	Parameter	Conditions	Min.	Typ.	Max.	Units
f_{IN}	Input frequency		32	-	2000	KHz
f_{OUT}	Output frequency		48	-	96	MHz
$I_{FDPLL96M}$	Current consumption	f_{IN}= 32 kHz, f_{OUT}= 48 MHz		500	733	µA
		f_{IN}= 32 kHz, f_{OUT}= 96 MHz		900	1235	

Downloaded from Arrow.com.

.....continued						
Symbol	**Parameter**	**Conditions**	**Min.**	**Typ.**	**Max.**	**Units**
Jp	Period jitter	f_{IN}= 32 kHz, f_{OUT}= 48 MHz	-	2.1	3.2	%
		f_{IN}= 32 kHz, f_{OUT}= 96 MHz		4.0	6.9	
		f_{IN}= 2 MHz, f_{OUT}= 48 MHz		2.2	3.6	
		f_{IN}= 2 MHz, f_{OUT}= 96 MHz		4.7	8.2	
t_{LOCK}	Lock Time	After startup, time to get lock signal. f_{IN}= 32 kHz, f_{OUT}= 96 MHz		1.2	2	ms
		f_{IN}= 2 MHz, f_{OUT}= 96 MHz		25	50	µs
Duty	Duty cycle		40	50	60	%

Table 38-31. FDPLL96M Characteristics(1) (Silicon Revision F and G)

Symbol	**Parameter**	**Conditions**	**Min.**	**Typ.**	**Max.**	**Units**
f_{IN}	Input frequency	-	32	-	2000	KHz
f_{OUT}	Output frequency	-	48	-	96	MHz
$I_{FDPLL96M}$	Current consumption	f_{IN}= 32 kHz, f_{OUT}= 48 MHz	-	500	-	µA
		f_{IN}= 32 kHz, f_{OUT}= 96 MHz	-	900	-	
Jp	Period jitter	f_{IN}= 32 kHz, f_{OUT}= 48 MHz	-	2.1	3.0	%
		f_{IN}= 32 kHz, f_{OUT}= 96 MHz	-	3.8	9.2	
		f_{IN}= 2 MHz, f_{OUT}= 48 MHz	-	2.2	3.2	
		f_{IN}= 2 MHz, f_{OUT}= 96 MHz	-	4.4	10.0	
t_{LOCK}	Lock Time	After startup, time to get lock signal. f_{IN}= 32 kHz, f_{OUT}= 96 MHz	-	1.2	2	ms
		f_{IN}= 2 MHz, f_{OUT}= 96 MHz	-	25	50	µs
Duty	Duty cycle	-	40	50	60	%

Note: 1. All values have been characterized with FILTSEL[1/0] as default value.

38.9 PTC Characteristics at 105°C

The values in the Power Consumption table below are measured values of power consumption under the following conditions:

Operating Conditions

VDD = 3.3V

Clocks

OSC8M used as main clock source, running undivided at 8MHz

CPU is running on flash with 0 wait states, at 8MHz

PTC running at 4MHz

PTC Configuration

Mutual-capacitance mode

One touch channel

Downloaded from Arrow.com.

System Configuration

Standby sleep mode enabled

RTC running on OSCULP32K: used to define the PTC scan rate, through the event system

Drift Calibration disabled: no interrupts, PTC scans are performed in standby mode

Drift Calibration enabled: RTC interrupts (wakeup) the CPU to perform PTC scans. PTC drift calibration is performed every 1.5 sec.

Table 38-32. Power Consumption

Symbol	Parameters	Drift Calibration	PTC scan rate (msec)	Oversamples	Ta	Typ.	Max	Units
IDD	Current Consumption	Disabled	10	4	Max 105°C Typ 25°C	9	458	µA
				16		17	467	
			50	4		5	452	
				16		6	454	
			100	4		4	452	
				16		5	453	
			200	4		4	452	
				16		4	452	
		Enabled	10	4		15	466	
				16		23	476	
			50	4		7	456	
				16		8	459	
			100	4		5	455	
				16		6	455	
			200	4		6	453	
				16		6	454	

38.10 USB Characteristics

The USB shares the same characteristics as in the -40°C to 85°C.

Downloaded from Arrow.com.

39. Electrical Characteristics at 125°C

39.1 Disclaimer

All typical values are measured at T = 25°C unless otherwise specified. All minimum and maximum values are valid across operating temperature and voltage unless otherwise specified.

39.2 Absolute Maximum Ratings

Stresses beyond those listed in the table below may cause permanent damage to the device. This is a stress rating only and functional operation of the device at these or other conditions beyond those indicated in the operational sections of this specification is not implied. Exposure to absolute maximum rating conditions for extended periods may affect device reliability.

Table 39-1. Absolute Maximum Ratings

Symbol	Parameter	Condition	Min.	Max.	Units
V_{DD}	Power supply voltage		0	3.8	V
I_{VDD}	Current into a V_{DD} pin		-	28(1)	mA
I_{GND}	Current out of a GND pin		-	39(1)	mA
V_{PIN}	Pin voltage with respect to GND and V_{DD}		GND-0.6V	V_{DD}+0.6V	V
$T_{storage}$	Storage temperature		-60	150	°C

Note:

1. Maximum source current is 14mA and maximum sink current is 19.5mA per cluster. A cluster is a group of GPIOs, see related links. Also note that each VDD/GND pair is connected to 2 clusters so current consumption through the pair will be a sum of the clusters source/sink currents.

Related Links

7.2.4 GPIO Clusters

39.3 General Operating Ratings

The device must operate within the ratings in order for all other electrical characteristics and typical characteristics of the device to be valid.

Table 39-2. General Operating Conditions

Symbol	Parameter	Condition	Min.	Typ.	Max.	Units
V_{DD}	Power supply voltage		1.62(1)	3.3	3.63	V
V_{DDANA}	Analog supply voltage		1.62(1)	3.3	3.63	V
T_A	Temperature range		-40	25	125	°C
T_J	Junction temperature		-	-	145	°C

Note:

Notes: 1. With BOD33 disabled. If the BOD33 is enabled, check Table 37-21.

Downloaded from Arrow.com.

39.4 Maximum Clock Frequencies

Table 39-3. Maximum GCLK Generator Output Frequencies (Device Variant A)

Symbol	Description	Conditions	Max.	Units
$f_{GCLKGEN0}$ / f_{GCLK_MAIN}	GCLK Generator Output Frequency	Undivided	96	MHz
$f_{GCLKGEN1}$ $f_{GCLKGEN2}$ $f_{GCLKGEN3}$ $f_{GCLKGEN4}$ $f_{GCLKGEN5}$ $f_{GCLKGEN6}$ $f_{GCLKGEN7}$ $f_{GCLKGEN8}$		Divided	32	MHz

Table 39-4. Maximum Peripheral Clock Frequencies (Device Variant A)

Symbol	Description	Max.	Units
f_{CPU}	CPU clock frequency	32	MHz
f_{AHB}	AHB clock frequency	32	MHz
f_{APBA}	APBA clock frequency	32	MHz
f_{APBB}	APBB clock frequency	32	MHz
f_{APBC}	APBC clock frequency	32	MHz
$f_{GCLK_DFLL48M_REF}$	DFLL48M Reference clock frequency	33	KHz
f_{GCLK_DPLL}	FDPLL96M Reference clock frequency	2	MHz
$f_{GCLK_DPLL_32K}$	FDPLL96M 32k Reference clock frequency	32	KHz
f_{GCLK_WDT}	WDT input clock frequency	48	MHz
f_{GCLK_RTC}	RTC input clock frequency	48	MHz
f_{GCLK_EIC}	EIC input clock frequency	48	MHz
f_{GCLK_USB}	USB input clock frequency	48	MHz
$f_{GCLK_EVSYS_CHANNEL_0}$	EVSYS channel 0 input clock frequency	48	MHz
$f_{GCLK_EVSYS_CHANNEL_1}$	EVSYS channel 1 input clock frequency	48	MHz
$f_{GCLK_EVSYS_CHANNEL_2}$	EVSYS channel 2 input clock frequency	48	MHz
$f_{GCLK_EVSYS_CHANNEL_3}$	EVSYS channel 3 input clock frequency	48	MHz
$f_{GCLK_EVSYS_CHANNEL_4}$	EVSYS channel 4 input clock frequency	48	MHz
$f_{GCLK_EVSYS_CHANNEL_5}$	EVSYS channel 5 input clock frequency	48	MHz
$f_{GCLK_EVSYS_CHANNEL_6}$	EVSYS channel 6 input clock frequency	48	MHz
$f_{GCLK_EVSYS_CHANNEL_7}$	EVSYS channel 7 input clock frequency	48	MHz
$f_{GCLK_EVSYS_CHANNEL_8}$	EVSYS channel 8 input clock frequency	48	MHz
$f_{GCLK_EVSYS_CHANNEL_9}$	EVSYS channel 9 input clock frequency	48	MHz

© 2021 Microchip Technology Inc. and its subsidiaries

Downloaded from Arrow.com.

.....continued			
Symbol	**Description**	**Max.**	**Units**
$f_{GCLK_EVSYS_CHANNEL_10}$	EVSYS channel 10 input clock frequency	48	MHz
$f_{GCLK_EVSYS_CHANNEL_11}$	EVSYS channel 11 input clock frequency	48	MHz
$f_{GCLK_SERCOMx_SLOW}$	Common SERCOM slow input clock frequency	48	MHz
$f_{GCLK_SERCOM0_CORE}$	SERCOM0 input clock frequency	48	MHz
$f_{GCLK_SERCOM1_CORE}$	SERCOM1 input clock frequency	48	MHz
$f_{GCLK_SERCOM2_CORE}$	SERCOM2 input clock frequency	48	MHz
$f_{GCLK_SERCOM3_CORE}$	SERCOM3 input clock frequency	48	MHz
$f_{GCLK_SERCOM4_CORE}$	SERCOM4 input clock frequency	48	MHz
$f_{GCLK_SERCOM5_CORE}$	SERCOM5 input clock frequency	48	MHz
f_{GCLK_TCC0}, f_{GCLK_TCC1}	TCC0, TCC1 input clock frequency	96	MHz
f_{GCLK_TCC2}, f_{GCLK_TC3}	TCC2, TC3 input clock frequency	96	MHz
f_{GCLK_TC4}, f_{GCLK_TC5}	TC4, TC5 input clock frequency	48	MHz
f_{GCLK_TC6}, f_{GCLK_TC7}	TC6, TC7 input clock frequency	48	MHz
f_{GCLK_ADC}	ADC input clock frequency	48	MHz
$f_{GCLK_AC_DIG}$	AC digital input clock frequency	48	MHz
$f_{GCLK_AC_ANA}$	AC analog input clock frequency	64	KHz
f_{GCLK_DAC}	DAC input clock frequency	48	MHz
f_{GCLK_PTC}	PTC input clock frequency	48	MHz
$f_{GCLK_I2S_0}$	I2S serializer 0 input clock frequency	13	MHz
$f_{GCLK_I2S_1}$	I2S serializer 1 input clock frequency	13	MHz

Table 39-5. Maximum GCLK Generator Output Frequencies (Device Variant B, C, D, and L)

Symbol	Description	Conditions	Max.	Units
$f_{GCLKGEN0}$ / f_{GCLK_MAIN}	GCLK Generator Output Frequency	Undivided	96	MHz
$f_{GCLKGEN1}$ $f_{GCLKGEN2}$ $f_{GCLKGEN3}$ $f_{GCLKGEN4}$ $f_{GCLKGEN5}$ $f_{GCLKGEN6}$ $f_{GCLKGEN7}$ $f_{GCLKGEN8}$		Divided	48	MHz

Table 39-6. Maximum Peripheral Clock Frequencies (Device Variant B, C, D, and L)

Symbol	Description	Max.	Units
f_{CPU}	CPU clock frequency	48	MHz
f_{AHB}	AHB clock frequency	48	MHz

Downloaded from Arrow.com.

.....continued

Symbol	Description	Max.	Units
f_{APBA}	APBA clock frequency	48	MHz
f_{APBB}	APBB clock frequency	48	MHz
f_{APBC}	APBC clock frequency	48	MHz
$f_{GCLK_DFLL48M_REF}$	DFLL48M Reference clock frequency	33	KHz
f_{GCLK_DPLL}	FDPLL96M Reference clock frequency	2	MHz
$f_{GCLK_DPLL_32K}$	FDPLL96M 32k Reference clock frequency	32	KHz
f_{GCLK_WDT}	WDT input clock frequency	48	MHz
f_{GCLK_RTC}	RTC input clock frequency	48	MHz
f_{GCLK_EIC}	EIC input clock frequency	48	MHz
f_{GCLK_USB}	USB input clock frequency	48	MHz
$f_{GCLK_EVSYS_CHANNEL_0}$	EVSYS channel 0 input clock frequency	48	MHz
$f_{GCLK_EVSYS_CHANNEL_1}$	EVSYS channel 1 input clock frequency	48	MHz
$f_{GCLK_EVSYS_CHANNEL_2}$	EVSYS channel 2 input clock frequency	48	MHz
$f_{GCLK_EVSYS_CHANNEL_3}$	EVSYS channel 3 input clock frequency	48	MHz
$f_{GCLK_EVSYS_CHANNEL_4}$	EVSYS channel 4 input clock frequency	48	MHz
$f_{GCLK_EVSYS_CHANNEL_5}$	EVSYS channel 5 input clock frequency	48	MHz
$f_{GCLK_EVSYS_CHANNEL_6}$	EVSYS channel 6 input clock frequency	48	MHz
$f_{GCLK_EVSYS_CHANNEL_7}$	EVSYS channel 7 input clock frequency	48	MHz
$f_{GCLK_EVSYS_CHANNEL_8}$	EVSYS channel 8 input clock frequency	48	MHz
$f_{GCLK_EVSYS_CHANNEL_9}$	EVSYS channel 9 input clock frequency	48	MHz
$f_{GCLK_EVSYS_CHANNEL_10}$	EVSYS channel 10 input clock frequency	48	MHz
$f_{GCLK_EVSYS_CHANNEL_11}$	EVSYS channel 11 input clock frequency	48	MHz
$f_{GCLK_SERCOMx_SLOW}$	Common SERCOM slow input clock frequency	48	MHz
$f_{GCLK_SERCOM0_CORE}$	SERCOM0 input clock frequency	48	MHz
$f_{GCLK_SERCOM1_CORE}$	SERCOM1 input clock frequency	48	MHz
$f_{GCLK_SERCOM2_CORE}$	SERCOM2 input clock frequency	48	MHz
$f_{GCLK_SERCOM3_CORE}$	SERCOM3 input clock frequency	48	MHz
$f_{GCLK_SERCOM4_CORE}$	SERCOM4 input clock frequency	48	MHz
$f_{GCLK_SERCOM5_CORE}$	SERCOM5 input clock frequency	48	MHz
f_{GCLK_TCC0}, f_{GCLK_TCC1}	TCC0, TCC1 input clock frequency	96	MHz
f_{GCLK_TCC2}, f_{GCLK_TCC3}, f_{GCLK_TC3}	TCC2, TCC3,TC3 input clock frequency	96	MHz
f_{GCLK_TC4}, f_{GCLK_TC5}	TC4, TC5 input clock frequency	48	MHz
f_{GCLK_TC6}, f_{GCLK_TC7}	TC6, TC7 input clock frequency	48	MHz
f_{GCLK_ADC}	ADC input clock frequency	48	MHz
$f_{GCLK_AC_DIG}$	AC digital input clock frequency	48	MHz

Downloaded from Arrow.com.

.....continued

Symbol	Description	Max.	Units
$f_{GCLK_AC_ANA}$	AC analog input clock frequency	64	KHz
$f_{GCLK_AC1_DIG}$	AC1 digital input clock frequency	48	MHz
$f_{GCLK_AC1_ANA}$	AC1 analog input clock frequency	64	KHz
f_{GCLK_DAC}	DAC input clock frequency	48	MHz
f_{GCLK_PTC}	PTC input clock frequency	48	MHz
$f_{GCLK_I2S_0}$	I2S serializer 0 input clock frequency	13	MHz
$f_{GCLK_I2S_1}$	I2S serializer 1 input clock frequency	13	MHz

39.5 Power Consumption

The values in this section are measured values of power consumption under the following conditions, except where noted:

- Operating conditions
  - V_{VDDIN} = 3.3 V
- Wake up time from sleep mode is measured from the edge of the wakeup signal to the execution of the first instruction fetched in flash.
- Oscillators
  - XOSC (crystal oscillator) stopped
  - XOSC32K (32 kHz crystal oscillator) running with external 32kHz crystal
  - DFLL48M using XOSC32K as reference and running at 48 MHz
- Clocks
  - DFLL48M used as main clock source, except otherwise specified
  - CPU, AHB clocks undivided
  - APBA clock divided by 4
  - APBB and APBC bridges off
- The following AHB module clocks are running: NVMCTRL, APBA bridge
  - All other AHB clocks stopped
- The following peripheral clocks running: PM, SYSCTRL, RTC
  - All other peripheral clocks stopped
- I/Os are inactive with internal pull-up
- CPU is running on flash with 1 wait states
- Cache enabled
- BOD33 disabled

Downloaded from Arrow.com.

Table 39-7. Current Consumption (Device Variant A, B, C and L. Silicon Revision F)

Mode	Conditions	T_A	Typ.	Max.	Units
ACTIVE	CPU running a While(1) algorithm	125°C	3.75	4.12	mA
	CPU running a While(1) algorithm V_{DDIN}=1.8V, CPU is running on Flash with 3 wait states	125°C	3.77	4.13	
	CPU running a While(1) algorithm, CPU is running on Flash with 3 wait states with GCLKIN as reference	125°C	62*freq + 228	62*freq + 302	µA (with freq in MHz)
	CPU running a Fibonacci algorithm	125°C	4.85	5.29	mA
	CPU running a Fibonacci algorithm V_{DDIN}=1.8V, CPU is running on flash with 3 wait states	125°C	4.87	5.29	
	CPU running a Fibonacci algorithm, CPU is running on Flash with 3 wait states with GCLKIN as reference	125°C	88*freq + 424	88*freq + 486	µA (with freq in MHz)
	CPU running a CoreMark algorithm	125°C	6.70	7.30	mA
	CPU running a CoreMark algorithm V_{DDIN}=1.8V, CPU is running on flash with 3 wait states	125°C	5.98	6.41	
	CPU running a CoreMark algorithm, CPU is running on Flash with 3 wait states with GCLKIN as reference	125°C	108*freq + 426	108*freq + 492	µA (with freq in MHz)
IDLE0	Default operating conditions	125°C	2.40	2.69	mA
IDLE1	Default operating conditions	125°C	1.79	2.05	
IDLE2	Default operating conditions	125°C	1.50	1.76	
STANDBY (Device Variant B, Die Revision E)	XOSC32K running , RTC running at 1kHz(1)	125°C	348.0	850.0	µA
	XOSC32K and RTC stopped(1)	125°C	346.0	848.0	
STANDBY (Device Variant B and C, Die Revision F)	XOSC32K running , RTC running at 1kHz(1)	125°C	294.0	782.0	µA
	XOSC32K and RTC stopped(1)	125°C	292.0	780.0	

Note:

1. Measurements were done with SYSCTRL->VREG.bit.RUNSTDBY = 1

Downloaded from Arrow.com.

Table 39-8. Current Consumption (Silicon Revision G)

Mode	conditions	Ta	Vcc	Typ.	Max.	Units
ACTIVE	CPU running a While 1 algorithm	125°C	3,3V	3.5	4.0	mA
			1,8V	3.5	4.0	
	CPU running a While 1 algorithm, with GCLKIN as reference		3,3V	57*Freq+395	55*Freq+1076	
	CPU running a Fibonacci algorithm		3,3V	4.5	5.0	
			1,8V	4.5	5.0	
	CPU running a Fibonacci algorithm, with GCLKIN as reference		3,3V	75*Freq+397	72*Freq+1076	
	CPU running a CoreMark algorithm		3,3V	5.1	5.7	
			1,8V	4.9	5.5	
	CPU running a CoreMark algorithm, with GCLKIN as reference		3,3V	88*Freq+399	85*Freq+1075	
IDLE0			3,3V	2.0	2.5	
IDLE1			3,3V	1.4	1.9	
IDLE2			3,3V	1.1	1.7	
STANDBY	XOSC32K running, RTC running at 1kHz RTC running at 1kHz (1)		3,3V	294.0	782.0	µA
	XOSC32K and RTC stopped (1)		3,3V	292.0	780.0	

Note:

1. Measurements done with VREG.bit.RUNSTDBY = 1.

Table 39-9. Wake-up Time (SAMD21)

Mode	Conditions	T_A	Min.	Typ.	Max.	Units
IDLE0	OSC8M used as main clock source, Cache disabled	125°C	3.9	4.0	4.1	µs
IDLE1	OSC8M used as main clock source, Cache disabled	125°C	13.5	14.9	16.4	
IDLE2	OSC8M used as main clock source, Cache disabled	125°C	14.4	15.8	17.2	
STANDBY	OSC8M used as main clock source, Cache disabled	125°C	19.2	20.6	22.1	

Downloaded from Arrow.com.

Figure 39-1. Measurement Schematic

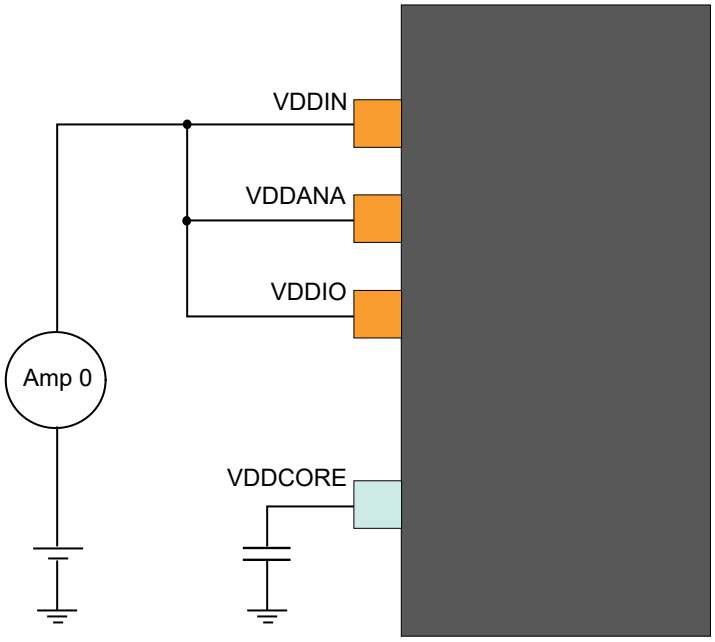

39.6 Analog Characteristics

39.6.1 Power-On Reset (POR) Characteristics

Table 39-10. POR Characteristics

Symbol	Parameter	Conditions	Min.	Typ.	Max.	Units
V_{POT+}	Voltage threshold on V_{DD} rising	V_{DD} falls at 1V/ms or slower	1.27	1.45	1.58	V
V_{POT-}	Voltage threshold on V_{DD} falling		0.72	0.99	1.32	V

Downloaded from Arrow.com.

Figure 39-2. POR Operating Principle

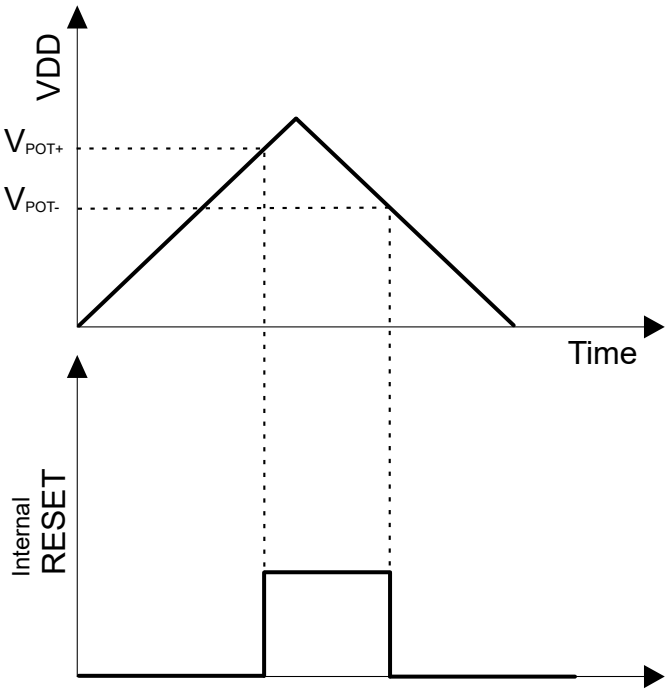

39.6.2 Brown-Out Detectors Characteristics

39.6.2.1 BOD33

Table 39-11. BOD33 Characteristics (Device Variant A)

Symbol	Parameter	Conditions	Temp.	Min.	Typ.	Max.	Units
	Step size, between adjacent values in BOD33.LEVEL			-	34	-	mV
V_{HYST}	V_{BOD+} - V_{BOD-}	Hysteresis ON		35	-	170	mV
t_{DET}	Detection time	Time with $V_{DDANA} < V_{TH}$ necessary to generate a reset signal		-	0.9(1)	-	µs
I_{BOD33}	Current consumption	Continuous mode	25°C	-	25	48	µA
			-40 to 125°C	-	-	50	
		Sampling mode	25°C	-	0.034	0.21	
			-40 to 125°C	--	-	2.29	
$I_{SbyBOD33}$	Current consumption in Standby mode	Sampling mode	25°C	-	0.132	0.38	µA
			-40 to 125°C	-	-	1.62	
$t_{STARTUP}$	Start-up time			-	1.2(1)	-	µs

Downloaded from Arrow.com.

Table 39-12. BOD33 Characteristics (Device Variant B, C, D and L)

Symbol	Parameter	Conditions	Temp.	Min.	Typ.	Max.	Units
	Step size, between adjacent values in BOD33.LEVEL			-	34	-	mV
V_{HYST}	V_{BOD+} - V_{BOD-}	Hysteresis ON		35	-	170	mV
t_{DET}	Detection time	Time with $V_{DDANA} < V_{TH}$ necessary to generate a reset signal		-	0.9(1)	-	µs
I_{BOD33}	Current consumption	Continuous mode	25°C	-	25	48	µA
			-40 to 125°C	-	-	52	
		Sampling mode	25°C	-	0.03	0.21	
			-40 to 125°C	--	-	2.91	
$I_{SbyBOD33}$	Current consumption in Standby mode	Sampling mode	25°C	-	0.13	0.38	µA
			-40 to 125°C	-	-	1.7	
$t_{STARTUP}$	Start-up time			-	2.2(1)	-	µs

Note: 1. These values are based on simulation. These values are not covered by test limits in production or characterization.

39.6.3 Analog-to-Digital (ADC) characteristics

Table 39-13. Operating Conditions (Device Variant A)

Symbol	Parameter	Conditions	Min.	Typ.	Max.	Units
VDDANA	Power Supply Voltage	T>105°C	3	-	3.6	V
RES	Resolution	-	8	-	12	bits
f_{CLK_ADC}	ADC Clock frequency	-	30	-	2100	kHz
	Sample rate(1)	Single shot (with VDDANA > 3.0V)(4)	5	-	300	ksps
		Free running	5	-	350	ksps
	Sampling time(1)	-	250	-	-	ns
	Sampling time with DAC as input(2)	-	3	-	-	µs
	Sampling time with Temp sens as input(2)	-	10	-	-	µs
	Sampling time with Bandgap as input(2)	-	10	-	-	µs
	Conversion time(1)	1x Gain	6	-	-	cycles
V_{REF}	Voltage reference range (VREFA or VREFB)	-	1.0	-	V_{DDANA}-0.6	V
INT1V	Internal 1V reference (2,5)	-	-	1.0	-	V
INTVCC0	Internal ratiometric reference 0(2)	-	-	V_{DDANA}/1.48	-	V

Downloaded from Arrow.com.

.....continued

Symbol	Parameter	Conditions	Min.	Typ.	Max.	Units
INTVCC0 Voltage Error	Internal ratiometric reference 0(2) error	2.0V < V_{DDANA}<3.63V	-1.0	-	+1.0	%
INTVCC1	Internal ratiometric reference 1(2)	V_{DDANA}>2.0V	-	V_{DDANA}/2	-	V
INTVCC1 Voltage Error	Internal ratiometric reference 1(2) error	2.0V < V_{DDANA}<3.63V	-1.0	-	+1.0	%
	Conversion range(1)	Differential mode	-V_{REF}/ GAIN	-	+V_{REF}/GAIN	V
		Single-ended mode	0.0	-	+V_{REF}/GAIN	V
C_{SAMPLE}	Sampling capacitance(2)	-	-	3.5	-	pF
R_{SAMPLE}	Input channel source resistance(2)	-	-	-	3.5	kΩ
I_{DD}	DC supply current(1)	f_{CLK_ADC} = 2.1MHz(3)	-	1.25	1.85	mA

Table 39-14. Operating Conditions (Device Variant B, C, D and L)

Symbol	Parameter	Conditions	Min.	Typ.	Max.	Units
VDDANA	Power Supply Voltage	T>105°C	3	-	3.6	V
RES	Resolution	-	8	-	12	bits
f_{CLK_ADC}	ADC Clock frequency	-	30	-	2100	kHz
	Conversion speed	-	10	-	1000	ksps
	Sample rate(1)	Single shot	5	-	300	ksps
		Free running	5	-	350	ksps
	Sampling time(1)	-	250	-	-	ns
	Sampling time with DAC as input(2)	-	3	-	-	µs
	Sampling time with Temp sens as input(2)	-	10	-	-	µs
	Sampling time with Bandgap as input(2)	-	10	-	-	µs
	Conversion time(1)	1x Gain	6	-	-	cycles
V_{REF}	Voltage reference range (VREFA or VREFB)	-	1.0	-	V_{DDANA}-0.6	V
INTV1	Internal 1V reference (2,4)	-	-	1.0	-	V
INTVCC0	Internal ratiometric reference 0(2)	-	-	V_{DDANA}/1.48	-	V
INTVCC0 Voltage Error	Internal ratiometric reference 0(2) error	2.0V < V_{DDANA}<3.63V	-1.0	-	+1.0	%
INTVCC1	Internal ratiometric reference 1(2)	V_{DDANA}>2.0V	-	V_{DDANA}/2	-	V

Downloaded from Arrow.com.

.....continued						
Symbol	**Parameter**	**Conditions**	**Min.**	**Typ.**	**Max.**	**Units**
INTVCC1 Voltage Error	Internal ratiometric reference 1(2) error	2.0V < V_{DDANA}<3.63V	-1.0	-	+1.0	%
	Conversion range(1)	Differential mode	-V_{REF}/ GAIN	-	+V_{REF}/GAIN	V
		Single-ended mode	0.0	-	+V_{REF}/GAIN	V
C_{SAMPLE}	Sampling capacitance(2)		-	3.5	-	pF
R_{SAMPLE}	Input channel source resistance(2)		-	-	3.5	kΩ
I_{DD}	DC supply current(1)	f_{CLK_ADC} = 2.1MHz(3)	-	1.25	1.85	mA

Notes:

1. These values are based on characterization, and are not covered by test limits in production.
2. These values are based on simulation, and are not covered by test limits in production or characterization.
3. In this condition and for a sample rate of 350ksps, 1 Conversion at gain 1x takes 6 clock cycles of the ADC clock (conditions: 1X gain, 12-bit resolution, differential mode, free-running).
4. It is the buffered internal reference of 1.0V derived from the internal 1.1V bandgap reference.

Table 39-15. Differential Mode (Device Variant A)

Symbol	Parameter	Conditions	Min.	Typ.	Max.	Units
ENOB	Effective Number Of Bits	With gain compensation	-	10.5	10.9	bits
TUE	Total Unadjusted Error	1x Gain	1.5	4.3	17.0	LSB
INL	Integral Non Linearity	1x Gain	1.0	1.3	6.5	LSB
DNL	Differential Non Linearity	1x Gain	+/-0.3	+/-0.5	+/-0.95	LSB
GE	Gain Error	Ext. Ref 1x	-15.0	2.5	+20.0	mV
		V_{REF}=V_{DDANA}/1.48	-20.0	-1.5	+20.0	mV
		VREF = INT1V	-15.0	-5.0	+15.0	mV
	Gain Accuracy(5)	Ext. Ref. 0.5x	+/-0.1	+/-0.2	+/-0.45	%
		Ext. Ref. 2x to 16x	+/-0.1	+/-0.2	+/-2.0	%
OE	Offset Error	Ext. Ref. 1x	-10.0	-1.5	+10.0	mV
		V_{REF}=V_{DDANA}/1.48	-10.0	0.5	+15.0	mV
		VREF = INT1V	-10.0	3.0	+15.0	mV
SFDR	Spurious Free Dynamic Range	1x Gain F_{CLK_ADC} = 2.1 MHz F_{IN} = 40 kHz A_{IN} = 95% FSR	64.2	70.0	78.9	dB
SINAD	Signal-to-Noise and Distortion		64.1	65.0	66	dB
SNR	Signal-to-Noise Ratio		64.3	65.5	66.0	dB
THD	Total Harmonic Distortion		-74.8	-64.0	-65.0	dB
	Noise RMS	T = 25°C	0.6	1.0	1.6	mV

Downloaded from Arrow.com.

Table 39-16. Differential Mode (Device Variant B, C, D and L)

Symbol	Parameter	Conditions	Min.	Typ.	Max.	Units
ENOB	Effective Number Of Bits	With gain compensation	-	10.5	10.8	bits
TUE	Total Unadjusted Error	1x Gain	1.5	2.7	14	LSB
INL	Integral Non Linearity	1x Gain	0.9	1.3	4	LSB
DNL	Differential Non Linearity	1x Gain	+/-0.3	+/-0.5	+/-0.95	LSB
GE	Gain Error	Ext. Ref 1x	-10.0	-1.3	+10	mV
		$V_{REF} = V_{DDANA}/1.48$	-25.0	-10.1	+10.0	mV
		VREF = INT1V	-25.0	+2	+10.0	mV
	Gain Accuracy(5)	Ext. Ref. 0.5x	+/-0.005	+/-0.05	+/-0.15	%
		Ext. Ref. 2x to 16x	+/-0.01	+/-0.03	+/-0.5	%
OE	Offset Error	Ext. Ref. 1x	-8.0	-1.0	+8.0	mV
		$V_{REF} = V_{DDANA}/1.48$	-8.0	-0.6	+8.0	mV
		VREF = INT1V	-6.0	-1.0	+8.0	mV
SFDR	Spurious Free Dynamic Range	1x Gain F_{CLK_ADC} = 2.1 MHz F_{IN} = 40 kHz A_{IN} = 95% FSR	65.0	71.5	73.5	dB
SINAD	Signal-to-Noise and Distortion		58.0	65.0	67.0	dB
SNR	Signal-to-Noise Ratio		60.0	66	68.6	dB
THD	Total Harmonic Distortion		-73.0	-71.0	-67.0	dB
	Noise RMS	T = 25°C	0.6	1.0	1.6	mV

Notes:

1. Maximum numbers are based on characterization and not tested in production, and valid for 5% to 95% of the input voltage range.
2. Dynamic parameter numbers are based on characterization and not tested in production.
3. Respect the input common mode voltage through the following equations (where VCM_IN is the Input channel common mode voltage):
   - i. If |VIN| > VREF/4
     - VCM_IN < 0.95*VDDANA + VREF/4 – 0.75V
     - VCM_IN > VREF/4 -0.05*VDDANA -0.1V
   - ii. If |VIN| < VREF/4
     - VCM_IN < 1.2*VDDANA - 0.75V
     - VCM_IN > 0.2*VDDANA - 0.1V
4. The ADC channels on pins PA08, PA09, PA10, PA11 are powered from the V_{DDIO} power supply. The ADC performance of these pins will not be the same as all the other ADC channels on pins powered from the VDDANA power supply.
5. The gain accuracy represents the gain error expressed in percent. Gain accuracy (%) = (Gain Error in V x 100) / ($2*V_{ref}$/GAIN)

Table 39-17. Single-Ended Mode (Device Variant A)

Symbol	Parameter	Conditions	Min.	Typ.	Max.	Units
ENOB	Effective Number of Bits	With gain compensation	-	9.5	9.8	Bits
TUE	Total Unadjusted Error	1x gain	-	10.5	14.0	LSB
INL	Integral Non-Linearity	1x gain	1.0	1.6	7.5	LSB

Downloaded from Arrow.com.

.....continued						
Symbol	**Parameter**	**Conditions**	**Min.**	**Typ.**	**Max.**	**Units**
DNL	Differential Non-Linearity	1x gain	+/-0.5	+/-0.6	+/-0.95	LSB
GE	Gain Error	Ext. Ref. 1x	-10.0	0.7	+10.0	mV
	Gain Accuracy(4)	Ext. Ref. 0.5x	+/-0.1	+/-0.34	+/-0.4	%
		Ext. Ref. 2x to 16X	+/-0.01	+/-0.1	+/-0.15	%
OE	Offset Error	Ext. Ref. 1x	-5.0	1.5	+10.0	mV
SFDR	Spurious Free Dynamic Range	1x Gain F_{CLK_ADC} = 2.1 MHz F_{IN} = 40 kHz A_{IN} = 95% FSR	63.1	65.0	66.5	dB
SINAD	Signal-to-Noise and Distortion		50.7	59.5	61.0	dB
SNR	Signal-to-Noise Ratio		49.9	60.0	64.0	dB
THD	Total Harmonic Distortion		-65.4	-63.0	-62.1	dB
	Noise RMS	T = 25°C	-	1.0	-	mV

Table 39-18. Single-Ended Mode (Device Variant B, C, D and L)

Symbol	Parameter	Conditions	Min.	Typ.	Max.	Units
ENOB	Effective Number of Bits	With gain compensation	-	9.7	10.1	Bits
TUE	Total Unadjusted Error	1x gain	-	7.9	40.0	LSB
INL	Integral Non-Linearity	1x gain	1.4	2.6	6.0	LSB
DNL	Differential Non-Linearity	1x gain	+/-0.6	+/-0.7	+/-0.95	LSB
GE	Gain Error	Ext. Ref. 1x	-5.0	0.6	+5.0	mV
	Gain Accuracy(4)	Ext. Ref. 0.5x	+/-0.1	+/-0.37	+/-0.55	%
		Ext. Ref. 2x to 16X	+/-0.01	+/-0.1	+/-0.2	%
OE	Offset Error	Ext. Ref. 1x	-5.0	0.6	+10.0	mV
SFDR	Spurious Free Dynamic Range	1x Gain F_{CLK_ADC} = 2.1 MHz F_{IN} = 40 kHz A_{IN} = 95%FSR	63.0	68.0	68.7	dB
SINAD	Signal-to-Noise and Distortion		55.0	60.1	62.5	dB
SNR	Signal-to-Noise Ratio		54.0	61.0	64.0	dB
THD	Total Harmonic Distortion		-69.0	-68.0	-65.0	dB
	Noise RMS	T = 25°C	-	1.0	-	mV

Notes:

1. Maximum numbers are based on characterization and not tested in production, and for 5% to 95% of the input voltage range.
2. Respect the input common mode voltage through the following equations (where VCM_IN is the Input channel common mode voltage) for all VIN:
   - VCM_IN < 0.7*VDDANA + VREF/4 – 0.75V
   - VCM_IN > VREF/4 – 0.3*VDDANA - 0.1V
3. The ADC channels on pins PA08, PA09, PA10, PA11 are powered from the V_{DDIO} power supply. The ADC performance of these pins will not be the same as all the other ADC channels on pins powered from the VDDANA power supply.
4. The gain accuracy represents the gain error expressed in percent. Gain accuracy (%) = (Gain Error in V x 100) / (V_{ref}/GAIN)

Downloaded from Arrow.com.

39.6.4 Inputs and Sample and Hold Acquisition Times

The analog voltage source must be able to charge the sample and hold (S/H) capacitor in the ADC in order to achieve maximum accuracy. Seen externally the ADC input consists of a resistor (R_{SAMPLE}) and a capacitor (C_{SAMPLE}). In addition, the source resistance (R_{SOURCE}) must be taken into account when calculating the required sample and hold time. The next figure shows the ADC input channel equivalent circuit.

Figure 39-3. ADC Input

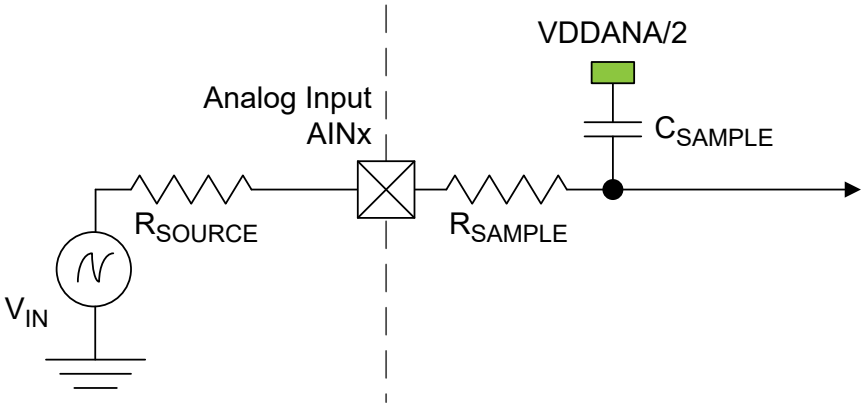

To achieve n bits of accuracy, the C_{SAMPLE} capacitor must be charged at least to a voltage of

$V_{CSAMPLE} \geq V_{IN} \times \left(1 + -2^{-(n+1)}\right)$

The minimum sampling time $t_{SAMPLEHOLD}$ for a given R_{SOURCE}can be found using this formula:

$t_{SAMPLEHOLD} \geq (R_{SAMPLE} + R_{SOURCE}) \times (C_{SAMPLE}) \times (n+1) \times \ln(2)$

for a 12 bits accuracy: $t_{SAMPLEHOLD} \geq (R_{SAMPLE} + R_{SOURCE}) \times (C_{SAMPLE}) \times 9.02$

39.6.5 Digital to Analog Converter (DAC) Characteristics

Table 39-19. Operating Conditions(1)(Device Variant A)

Symbol	Parameter	Conditions	Min.	Typ.	Max.	Units
V_{DDANA}	Analog supply voltage	-	1.62	-	3.63	V
AV_{REF}	External reference voltage	-	1.0	-	V_{DDANA}-0.6	V
	INT1V(3)	-	-	1	-	V
	VDDANA	-	-	V_{DDANA}	-	V
	Linear output voltage range	-	0.05	-	V_{DDANA}-0.05	V
	Minimum resistive load	-	5	-	-	kΩ
	Maximum capacitance load	-	-	-	100	pF
I_{DD}	DC supply current(2)	Voltage pump disabled	-	160	242	µA

Table 39-20. Operating Conditions(1)(Device Variant B, C, D and L)

Symbol	Parameter	Conditions	Min.	Typ.	Max.	Units
V_{DDANA}	Analog supply voltage	-	1.62	-	3.63	V

Downloaded from Arrow.com.

.....continued						
Symbol	Parameter	Conditions	Min.	Typ.	Max.	Units
AV_{REF}	External reference voltage	-	1.0	-	V_{DDANA}-0.6	V
	INT1V(3)	-	-	1	-	V
	VDDANA	-	-	V_{DDANA}	-	V
	Linear output voltage range	-	0.05	-	V_{DDANA}-0.05	V
	Minimum resistive load	-	5	-	-	kΩ
	Maximum capacitance load	-	-	-	100	pF
I_{DD}	DC supply current(2)	Voltage pump disabled	-	160	283	µA

Notes:

1. These values are based on specifications otherwise noted.
2. These values are based on characterization, and are not covered by test limits in production.
3. It is the buffered internal reference of 1.0V derived from the internal 1.1V bandgap reference.

Table 39-21. Clock and Timing(1)

Symbol	Parameter	Conditions		Min.	Typ.	Max.	Units
	Conversion rate	C_{load} = 100 pF R_{load} > 5 kΩ	Normal mode	-	-	350	ksps
			For Δ_{DATA} = +/-1	-	-	1000	
	Startup time	V_{DDNA} > 2.6V		-	-	2.85	µs
		V_{DDNA} < 2.6V		-	-	10	µs

Note:

1. These values are based on simulation, and are not covered by test limits in production or characterization.

Table 39-22. Accuracy Characteristics(1)(Device Variant A)

Symbol	Parameter	Conditions		Min.	Typ.	Max.	Units
RES	Input resolution	-		-	-	10	Bits
INL	Integral non-linearity	V_{REF} = Ext 1.0V	V_{DD} = 1.6V	0.75	1.1	2.0	LSB
			V_{DD} = 3.6V	0.6	1.2	2.5	
		V_{REF} = V_{DDANA}	V_{DD} = 1.6V	1.4	2.2	3.5	
			V_{DD} = 3.6V	0.9	1.4	1.5	
		V_{REF} = INT1V	V_{DD} = 1.6V	0.75	1.3	2.5	
			V_{DD} = 3.6V	0.8	1.2	1.5	
DNL	Differential non-linearity	V_{REF} = Ext 1.0V	V_{DD} = 1.6V	+/-0.9	+/-1.2	+/-2.0	LSB
			V_{DD} = 3.6V	+/-0.9	+/-1.1	+/-1.5	
		V_{REF} = V_{DDANA}	V_{DD} = 1.6V	+/-1.1	+/-1.7	+/-3.0	
			V_{DD} = 3.6V	+/-1.0	+/-1.1	+/-1.6	
		V_{REF} = INT1V	V_{DD} = 1.6V	+/-1.1	+/-1.4	+/-2.5	
			V_{DD} = 3.6V	+/-1.0	+/-1.5	+/-1.8	
GE	Gain error	Ext. V_{REF}		+/-1.0	+/-5	+/-10	mV

Downloaded from Arrow.com.

.....continued						
Symbol	Parameter	Conditions	Min.	Typ.	Max.	Units
OE	Offset error	Ext. V_{REF}	+/-2	+/-3	+/-8	mV

Table 39-23. Accuracy Characteristics(1)(Device Variant B, C, D and L)

Symbol	Parameter	Conditions		Min.	Typ.	Max.	Units
RES	Input resolution	-		-	-	10	Bits
INL	Integral non-linearity	V_{REF} = Ext 1.0V	V_{DD} = 1.6V	0.7	0.75	2.0	LSB
			V_{DD} = 3.6V	0.6	0.65	1.5	
		V_{REF} = V_{DDANA}	V_{DD} = 1.6V	0.6	0.85	2.0	
			V_{DD} = 3.6V	0.5	0.8	1.5	
		V_{REF} = INT1V	V_{DD} = 1.6V	0.5	0.75	1.5	
			V_{DD} = 3.6V	0.7	0.8	1.5	
DNL	Differential non-linearity	V_{REF} = Ext 1.0V	V_{DD} = 1.6V	+/-0.3	+/-0.4	+/-1.0	LSB
			V_{DD} = 3.6V	+/-0.25	+/-0.4	+/-0.75	
		V_{REF} = V_{DDANA}	V_{DD} = 1.6V	+/-0.4	+/-0.55	+/-1.5	
			V_{DD} = 3.6V	+/-0.2	+/-0.3	+/-0.75	
		V_{REF} = INT1V	V_{DD} = 1.6V	+/-0.5	+/-0.7	+/-1.5	
			V_{DD} = 3.6V	+/-0.4	+/-0.7	+/-1.5	
GE	Gain error	Ext. V_{REF}		+/-0.5	+/-5	+/-12	mV
OE	Offset error	Ext. V_{REF}		+/-2	+/-1.5	+/-8	mV

Note:

1. All values measured using a conversion rate of 35 ksps.

39.6.6 Analog Comparator Characteristics

Table 39-24. Electrical and Timing (Device Variant A)

Symbol	Parameter	Conditions	Min.	Typ.	Max.	Units
	Positive input voltage range		0	-	V_{DDANA}	V
	Negative input voltage range		0	-	V_{DDANA}	
	Offset	Hysteresis = 0, Fast mode	-15	0.0	+15	mV
		Hysteresis = 0, Low power mode	-25	0.0	+25	mV
	Hysteresis	Hysteresis = 1, Fast mode	20	50	83	mV
		Hysteresis = 1, Low power mode	15	40	75	mV
	Propagation delay	Changes for V_{ACM}=V_{DDANA}/2 100mV overdrive, Fast mode	-	60	116	ns
		Changes for V_{ACM}=V_{DDANA}/2 100mV overdrive, Low power mode	-	225	370	ns

Downloaded from Arrow.com.

.....continued						
Symbol	**Parameter**	**Conditions**	**Min.**	**Typ.**	**Max.**	**Units**
$t_{STARTUP}$	Startup time	Enable to ready delay Fast mode	-	1	2	µs
		Enable to ready delay Low power mode	-	12	19	µs
V_{SCALE}	INL(3)		-	0.75	+1.58	LSB
	DNL(3)		-	0.25	+0.95	LSB
	Offset Error (1)(2)		-0.200	0.260	+1.035	LSB
	Gain Error (1)(2)		0.55	1.2	2.0	LSB

Table 39-25. Electrical and Timing (Device Variant B, C, D and L)

Symbol	Parameter	Conditions	Min.	Typ.	Max.	Units
	Positive input voltage range		0	-	V_{DDANA}	V
	Negative input voltage range		0	-	V_{DDANA}	
	Offset	Hysteresis = 0, Fast mode	-15	0.0	+15	mV
		Hysteresis = 0, Low power mode	-25	0.0	+25	mV
	Hysteresis	Hysteresis = 1, Fast mode	20	50	90	mV
		Hysteresis = 1, Low power mode	15	40	75	mV
	Propagation delay	Changes for $V_{ACM}=V_{DDANA}/2$ 100mV overdrive, Fast mode	-	90	180	ns
		Changes for $V_{ACM}=V_{DDANA}/2$ 100mV overdrive, Low power mode	-	282	520	ns
$t_{STARTUP}$	Startup time	Enable to ready delay Fast mode	-	1	2.6	µs
		Enable to ready delay Low power mode	-	14	22	µs
V_{SCALE}	INL(3)		-	0.75	+1.58	LSB
	DNL(3)		-	0.25	+0.95	LSB
	Offset Error (1)(2)		-0.200	0.260	+1.035	LSB
	Gain Error (1)(2)		0.55	1.2	2.0	LSB

Notes:

1. According to the standard equation $V(X)=V_{LSB}*(X+1)$; $V_{LSB}=V_{DDANA}/64$
2. Data computed with the Best Fit method
3. Data computed using histogram

39.6.7 Temperature Sensor Characteristics

Table 39-26. Temperature Sensor Characteristics(1)(Device Variant A)

Symbol	Parameter	Conditions	Min.	Typ.	Max.	Units
	Temperature sensor output voltage	T= 25°C, V_{DDANA} = 3.3V	-	0.667	-	V

Downloaded from Arrow.com.

.....continued						
Symbol	Parameter	Conditions	Min.	Typ.	Max.	Units
	Temperature sensor slope		2.2	2.4	2.7	mV/°C
	Variation over V_{DDANA} voltage	V_{DDANA}=1.62V to 3.6V	-9	1	14	mV/V
	Temperature Sensor accuracy	Using the method described in the 37.11.8.2 Software-based Refinement of the Actual Temperature	-13.0	-	13.0	°C

Table 39-27. Temperature Sensor Characteristics(1)(Device Variant B, C, D and L)

Symbol	Parameter	Conditions	Min.	Typ.	Max.	Units
	Temperature sensor output voltage	T= 25°C, V_{DDANA} = 3.3V	-	0.688	-	V
	Temperature sensor slope		2.06	2.16	2.26	mV/°C
	Variation over V_{DDANA} voltage	V_{DDANA}=1.62V to 3.6V	-0.4	1.4	3	mV/V
	Temperature Sensor accuracy	Using the method described in the 37.11.8.2 Software-based Refinement of the Actual Temperature	-13.0	-	13.0	°C

Note: 1. These values are based on characterization. These values are not covered by test limits in production.

39.7 NVM Characteristics

Table 39-28. Maximum Operating Frequency

V_{DD} range	NVM Wait States	Maximum Operating Frequency	Units
1.62V to 2.7V	0	14	MHz
	1	28	
	2	40	
2.7V to 3.63V	0	24	
	1	40	

Note that on this flash technology, a max number of 8 consecutive write is allowed per row. Once this number is reached, a row erase is mandatory.

Table 39-29. Flash Endurance and Data Retention

Symbol	Parameter	Conditions	Min.	Typ.	Max.	Units
Ret_{NVM25k}	Retention after up to 25k	Average ambient 55°C	10	50	-	Years
$Ret_{NVM2.5k}$	Retention after up to 2.5k	Average ambient 55°C	20	100	-	Years
Ret_{NVM100}	Retention after up to 100	Average ambient 55°C	25	>100	-	Years
Cyc_{NVM}	Cycling Endurance(1)	-40°C < Ta < 125°C	25k	150k	-	Cycles

Note: 1. An endurance cycle is a write and an erase operation.

Downloaded from Arrow.com.

Table 39-30. EEPROM Emulation(1) Endurance and Data Retention

Symbol	Parameter	Conditions	Min.	Typ.	Max.	Units
$Ret_{EEPROM100k}$	Retention after up to 100k	Average ambient 55°C	10	50	-	Years
$Ret_{EEPROM10k}$	Retention after up to 10k	Average ambient 55°C	20	100	-	Years
Cyc_{EEPROM}	Cycling Endurance(2)	-40°C < Ta < 125°C	100k	600k	-	Cycles

Notes: 1. The EEPROM emulation is a software emulation described in the App note AT03265.

2. An endurance cycle is a write and an erase operation.

39.8 Oscillators Characteristics

39.8.1 Crystal Oscillator (XOSC) Characteristics

39.8.1.1 Digital Clock Characteristics

The following table describes the characteristics for the oscillator when a digital clock is applied on XIN.

Table 39-31. Digital Clock Characteristics

Symbol	Parameter	Conditions	Min.	Typ.	Max.	Units
f_{CPXIN}	XIN clock frequency		-	-	32	MHz

39.8.1.2 Crystal Oscillator Characteristics

The following table describes the characteristics for the oscillator when a crystal is connected between XIN and XOUT . The user must choose a crystal oscillator where the crystal load capacitance C_L is within the range given in the table. The exact value of C_L can be found in the crystal data sheet. The capacitance of the external capacitors (C_{LEXT}) can then be computed as follows:

Load Capacitance Equation

$C_{LOAD} = ([C_{XIN} + C_{LEXT}] * [C_{XOUT} + C_{LEXT}]) / ([C_{XIN} + C_{LEXT} + C_{LEXT} + C_{XOUT}]) + C_{STRAY}$

Where:

C_{LOAD} = Crystal Mfg. C_{LOAD} specification

C_{XIN} = XOSC XIN pin data sheet specification

C_{XOUT} = XOSC XOUT pin data sheet specification

C_{LEXT} = Required external crystal load capacitor

C_{STRAY} (Osc PCB capacitance) = 1.5 pf per 12.5 mm (0.5 inches) (TRACE W = 0.175 mm, H = 36 µm, T = 113 µm)

Table 39-32. Crystal Oscillator Characteristics (Device Variant A)

Symbol	Parameter	Conditions	Min.	Typ.	Max.	Units
f_{OUT}	Crystal oscillator frequency		0.4	-	32	MHz

Downloaded from Arrow.com.

.....continued

Symbol	Parameter	Conditions	Min.	Typ.	Max.	Units
ESR	Crystal Equivalent Series Resistance Safety Factor = 3 The AGC doesn't have any noticeable impact on these measurements.	f = 0.455 MHz, C_L = 100pF XOSC.GAIN = 0	-	-	5.6K	Ω
		f = 2MHz, C_L = 20pF XOSC.GAIN = 0	-	-	416	
		f = 4MHz, C_L = 20pF XOSC.GAIN = 1	-	-	243	
		f = 8 MHz, C_L = 20pF XOSC.GAIN = 2	-	-	138	
		f = 16 MHz, C_L = 20pF XOSC.GAIN = 3	-	-	66	
		f = 32MHz, C_L = 18pF XOSC.GAIN = 4	-	-	56	
C_{XIN}	Parasitic capacitor load		-	5.9	-	pF
C_{XOUT}	Parasitic capacitor load		-	3.2	-	pF
	Current Consumption	f = 2MHz, C_L = 20pF, AGC off	27	65	90	µA
		f = 2MHz, C_L = 20pF, AGC on	14	52	79	
		f = 4MHz, C_L = 20pF, AGC off	61	117	161	
		f = 4MHz, C_L = 20pF, AGC on	23	74	110	
		f = 8MHz, C_L = 20pF, AGC off	131	226	319	
		f = 8MHz, C_L = 20pF, AGC on	56	128	193	
		f = 16MHz, C_L = 20pF, AGC off	305	502	742	
		f = 16MHz, C_L = 20pF, AGC on	116	307	627	
		f = 32MHz, C_L = 18pF, AGC off	1031	1622	2344	
		f = 32MHz, C_L = 18pF, AGC on	278	615	1422	
$t_{STARTUP}$	Start-up time	f = 2MHz, C_L = 20pF, XOSC.GAIN = 0, ESR = 600Ω	-	14K	48K	cycles
		f = 4MHz, C_L = 20pF, XOSC.GAIN = 1, ESR = 100Ω	-	6800	19.5K	
		f = 8 MHz, C_L = 20pF, XOSC.GAIN = 2, ESR = 35Ω	-	5550	13K	
		f = 16 MHz, C_L = 20pF, XOSC.GAIN = 3, ESR = 25Ω	-	6750	14.5K	
		f = 32MHz, C_L = 18pF, XOSC.GAIN = 4, ESR = 40Ω	-	5.3K	9.6K	

Table 39-33. Crystal Oscillator Characteristics (Device Variant B, C, D and L)

Symbol	Parameter	Conditions	Min.	Typ.	Max.	Units
f_{OUT}	Crystal oscillator frequency		0.4	-	32	MHz

Downloaded from Arrow.com.

.....continued

Symbol	Parameter	Conditions	Min.	Typ.	Max.	Units
ESR	Crystal Equivalent Series Resistance Safety Factor = 3 The AGC doesn't have any noticeable impact on these measurements.	f = 0.455 MHz, C_L = 100pF XOSC.GAIN = 0	-	-	5.6K	Ω
		f = 2MHz, C_L = 20pF XOSC.GAIN = 0	-	-	416	
		f = 4MHz, C_L = 20pF XOSC.GAIN = 1	-	-	243	
		f = 8 MHz, C_L = 20pF XOSC.GAIN = 2	-	-	138	
		f = 16 MHz, C_L = 20pF XOSC.GAIN = 3	-	-	66	
		f = 32MHz, C_L = 18pF XOSC.GAIN = 4	-	-	56	
C_{XIN}	Parasitic capacitor load		-	5.9	-	pF
C_{XOUT}	Parasitic capacitor load		-	3.2	-	pF
	Current Consumption	f = 2MHz, C_L = 20pF, AGC off	27	65	90	µA
		f = 2MHz, C_L = 20pF, AGC on	14	52	79	
		f = 4MHz, C_L = 20pF, AGC off	61	117	160	
		f = 4MHz, C_L = 20pF, AGC on	23	74	110	
		f = 8MHz, C_L = 20pF, AGC off	131	226	319	
		f = 8MHz, C_L = 20pF, AGC on	56	128	193	
		f = 16MHz, C_L = 20pF, AGC off	305	502	741	
		f = 16MHz, C_L = 20pF, AGC on	116	307	626	
		f = 32MHz, C_L = 18pF, AGC off	1031	1622	2344	
		f = 32MHz, C_L = 18pF, AGC on	278	615	1400	
$t_{STARTUP}$	Start-up time	f = 2MHz, C_L = 20pF, XOSC.GAIN = 0, ESR = 600Ω	-	14K	48K	cycles
		f = 4MHz, C_L = 20pF, XOSC.GAIN = 1, ESR = 100Ω	-	6800	19.5K	
		f = 8 MHz, C_L = 20pF, XOSC.GAIN = 2, ESR = 35Ω	-	5550	13K	
		f = 16 MHz, C_L = 20pF, XOSC.GAIN = 3, ESR = 25Ω	-	6750	14.5K	
		f = 32MHz, C_L = 18pF, XOSC.GAIN = 4, ESR = 40Ω	-	5.3K	9.6K	

Downloaded from Arrow.com.

Figure 39-4. Oscillator Connection

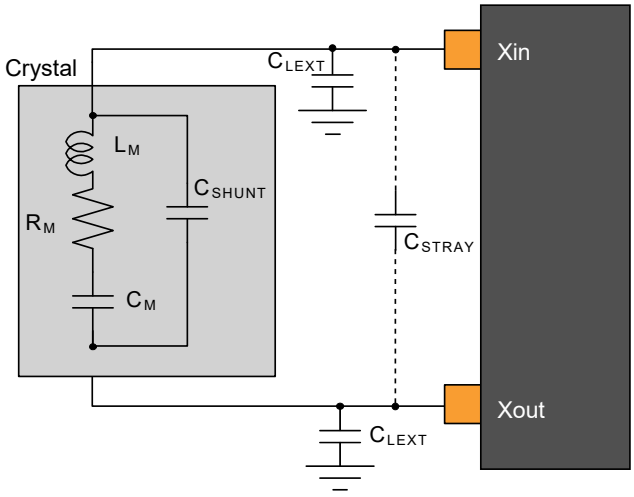

39.8.2 External 32 kHz Crystal Oscillator (XOSC32K) Characteristics

39.8.2.1 Digital Clock Characteristics

The following table describes the characteristics for the oscillator when a digital clock is applied on XIN32 pin.

Table 39-34. Digital Clock Characteristics

Symbol	Parameter	Conditions	Min.	Typ.	Max.	Units
$f_{CPXIN32}$	XIN32 clock frequency		-	32.768	-	kHz
	XIN32 clock duty cycle		-	50	-	%

39.8.2.2 Crystal Oscillator Characteristics

Figure 37-6 and the equation in also applies to the 32 kHz oscillator connection. The user must choose a crystal oscillator where the crystal load capacitance C_L is within the range given in the table. The exact value of C_L can be found in the crystal data sheet.

Table 39-35. 32kHz Crystal Oscillator Characteristics (Device Variant A)

Symbol	Parameter	Conditions	Min.	Typ.	Max.	Units
f_{OUT}	Crystal oscillator frequency		-	32768	-	Hz
$t_{STARTUP}$	Startup time	ESR_{XTAL} = 39.9 kΩ, C_L = 12.5 pF	-	28K	31K	cycles
C_L	Crystal load capacitance		-	-	12.5	pF
C_{SHUNT}	Crystal shunt capacitance		-	0.1	-	
C_{XIN32}	Parasitic capacitor load	TQFP64/48/32 packages	-	3.1	-	
C_{XOUT32}	Parasitic capacitor load		-	3.3	-	
$I_{XOSC32K}$	Current consumption		-	1.22	2.44	µA
ESR	Crystal equivalent series resistance f=32.768kHz , Safety Factor = 3	C_L=12.5pF	-	-	141	kΩ

Downloaded from Arrow.com.

Table 39-36. 32kHz Crystal Oscillator Characteristics (Device Variant B, C, D and L)

Symbol	Parameter	Conditions	Min.	Typ.	Max.	Units
f_{OUT}	Crystal oscillator frequency		-	32768	-	Hz
$t_{STARTUP}$	Startup time	ESR_{XTAL} = 39.9 kΩ, C_L = 12.5 pF	-	28K	30K	cycles
C_L	Crystal load capacitance		-	-	12.5	pF
C_{SHUNT}	Crystal shunt capacitance		-	0.1	-	
C_{XIN32}	Parasitic capacitor load	TQFP64/48/32 packages	-	3.2	-	
C_{XOUT32}	Parasitic capacitor load		-	3.7	-	
$I_{XOSC32K}$	Current consumption		-	1.22	2.2	µA
ESR	Crystal equivalent series resistance f=32.768kHz , Safety Factor = 3	C_L=12.5pF	-	-	100	kΩ

39.8.3 Digital Frequency Locked Loop (DFLL48M) Characteristics

Table 39-37. DFLL48M Characteristics - Open Loop Mode(1)(Device Variant A)

Symbol	Parameter	Conditions	Min.	Typ.	Max.	Units
f_{OUT}	Output frequency	IDFLLVAL.COARSE = DFLL48M COARSE CAL DFLLVAL.FINE = 512	47	48	49	MHz
I_{DFLL}	Power consumption on V_{DDIN}	IDFLLVAL.COARSE = DFLL48M COARSE CAL DFLLVAL.FINE = 512	-	403	457	µA
$t_{STARTUP}$	Start-up time	DFLLVAL.COARSE = DFLL48M COARSE CAL DFLLVAL.FINE = 512 f_{OUT} within 90 % of final value	7	8	9	µs

Table 39-38. DFLL48M Characteristics - Open Loop Mode(1)(Device Variant B, C, D and L)

Symbol	Parameter	Conditions	Min.	Typ.	Max.	Units
f_{OUT}	Output frequency	IDFLLVAL.COARSE = DFLL48M COARSE CAL DFLLVAL.FINE = 512	47	48	49	MHz
I_{DFLL}	Power consumption on V_{DDIN}	IDFLLVAL.COARSE = DFLL48M COARSE CAL DFLLVAL.FINE = 512	-	403	453	µA
$t_{STARTUP}$	Start-up time	DFLLVAL.COARSE = DFLL48M COARSE CAL DFLLVAL.FINE = 512 f_{OUT} within 90 % of final value	-	8	9	µs

Note: 1. DFLL48M in Open loop after calibration at room temperature.

Table 39-39. DFLL48M Characteristics - Closed Loop Mode(1)(Device Variant A)

Symbol	Parameter	Conditions	Min.	Typ.	Max.	Units
f_{OUT}	Average Output frequency	f_{REF} = 32 .768kHz	47.76	48	48.24	MHz
f_{REF}	Reference frequency		0.732	32.768	33	kHz
Jitter	Cycle to Cycle jitter	f_{REF} = 32 .768kHz	-	-	1.04	ns

Downloaded from Arrow.com.

.....continued						
Symbol	Parameter	Conditions	Min.	Typ.	Max.	Units
I_{DFLL}	Power consumption on V_{DDIN}	f_{REF} = 32 .768kHz	-	425	482	µA
t_{LOCK}	Lock time	f_{REF} = 32 .768kHz DFLLVAL.COARSE = DFLL48M COARSE CAL DFLLVAL.FINE = 512 DFLLCTRL.BPLCKC = 1 DFLLCTRL.QLDIS = 0 DFLLCTRL.CCDIS = 1 DFLLMUL.FSTEP = 10	100	200	500	µs

Table 39-40. DFLL48M Characteristics - Closed Loop Mode(1)(Device Variant B, C, D and L)

Symbol	Parameter	Conditions	Min.	Typ.	Max.	Units
f_{OUT}	Average Output frequency	f_{REF} = 32 .768kHz	47.76	48	48.24	MHz
f_{REF}	Reference frequency		0.732	32.768	33	kHz
Jitter	Cycle to Cycle jitter	f_{REF} = 32 .768kHz	-	-	0.42	ns
I_{DFLL}	Power consumption on V_{DDIN}	f_{REF} = 32 .768kHz	-	403	453	µA
t_{LOCK}	Lock time	f_{REF} = 32 .768kHz DFLLVAL.COARSE = DFLL48M COARSE CAL DFLLVAL.FINE = 512 DFLLCTRL.BPLCKC = 1 DFLLCTRL.QLDIS = 0 DFLLCTRL.CCDIS = 1 DFLLMUL.FSTEP = 10	-	200	500	µs

39.8.4 32.768 kHz Internal oscillator (OSC32K) Characteristics

Table 39-41. 32 kHz RC Oscillator Characteristics (Device Variant A)

Symbol	Parameter	Conditions	Min.	Typ.	Max.	Units
f_{OUT}	Output frequency	Calibrated against a 32.768 kHz reference at 25°C, over [-40, +125]°C, over [1.62, 3.63]V	28.508	32.768	35.389	kHz
		Calibrated against a 32.768 kHz reference at 25°C, at V_{DD} = 3.3V	32.276	32.768	33.260	
		Calibrated against a 32.768 kHz reference at 25°C, over [1.62, 3.63]V	31.457	32.768	34.079	
I_{OSC32K}	Current consumption		-	0.79	1.80	µA
$t_{STARTUP}$	Start-up time		-	1	2	cycle
Duty	Duty Cycle		-	50	-	%

Downloaded from Arrow.com.

Table 39-42. 32 kHz RC Oscillator Characteristics (Device Variant B, C, D and L)

Symbol	Parameter	Conditions	Min.	Typ.	Max.	Units
f_{OUT}	Output frequency	Calibrated against a 32.768 kHz reference at 25°C, over [-40, +125]°C, over [1.62, 3.63]V	28.508	32.768	35.389	kHz
		Calibrated against a 32.768 kHz reference at 25°C, at V_{DD} = 3.3V	32.276	32.768	33.260	
		Calibrated against a 32.768 kHz reference at 25°C, over [1.62, 3.63]V	31.457	32.768	34.079	
I_{OSC32K}	Current consumption		-	0.67	2.80	µA
$t_{STARTUP}$	Start-up time		-	1	2	cycle
Duty	Duty Cycle		-	50	-	%

39.8.5 Ultra Low-Power Internal 32 kHz RC Oscillator (OSCULP32K) Characteristics

Table 39-43. Ultra Low-Power Internal 32 kHz RC Oscillator Characteristics (Device Variant A)

Symbol	Parameter	Conditions	Min.	Typ.	Max.	Units
f_{OUT}	Output frequency	Calibrated against a 32.768 kHz reference at 25°C, over [-40, +125]°C, over [1.62, 3.63]V	25.559	32.768	40.305	kHz
		Calibrated against a 32.768 kHz reference at 25°C, at V_{DD} = 3.3V	31.293	32.768	34.570	
		Calibrated against a 32.768 kHz reference at 25°C, over [1.62, 3.63]V	31.293	32.768	34.570	
$i_{OSCULP32K}$(1)(2)			-	-	180	nA
$t_{STARTUP}$	Start-up time		-	10	-	cycles
Duty	Duty Cycle		-	50	-	%

Table 39-44. Ultra Low-Power Internal 32 kHz RC Oscillator Characteristics (Device Variant B, C, D and L)

Symbol	Parameter	Conditions	Min.	Typ.	Max.	Units
f_{OUT}	Output frequency	Calibrated against a 32.768 kHz reference at 25°C, over [-40, +125]°C, over [1.62, 3.63]V	25.559	32.768	40.305	kHz
		Calibrated against a 32.768 kHz reference at 25°C, at V_{DD} = 3.3V	31.293	32.768	34.570	
		Calibrated against a 32.768 kHz reference at 25°C, over [1.62, 3.63]V	31.293	32.768	34.570	
Duty	Duty Cycle		-	50	-	%

Notes:

1. These values are based on simulation, and are not covered by test limits in production or characterization.
2. This oscillator is always on.

Downloaded from Arrow.com.

39.8.6 8MHz RC Oscillator (OSC8M) Characteristics

Table 39-45. Internal 8MHz RC Oscillator Characteristics (Device Variant A)

Symbol	Parameter	Conditions	Min.	Typ.	Max.	Units
f_{OUT}	Output frequency	Calibrated against a 8MHz reference at 25°C, over [-40, +125]°C, over [1.62, 3.63]V	7.54	8	8.19	MHz
		Calibrated against a 8MHz reference at 25°C, at V_{DD}=3.3V	7.94	8	8.06	
		Calibrated against a 8MHz reference at 25°C, over [1.62, 3.63]V	7.92	8	8.08	
I_{OSC8M}	Current consumption	IIDLEIDLE2 on OSC32K versus IDLE2 on calibrated OSC8M enabled at 8MHz (FRANGE=1, PRESC=0)		64	100	µA
$t_{STARTUP}$	Startup time		-	2.1	3	µs
Duty	Duty cycle		-	50	-	%

Table 39-46. Internal 8MHz RC Oscillator Characteristics (Device Variant B, C, D and L)

Symbol	Parameter	Conditions	Min.	Typ.	Max.	Units
f_{OUT}	Output frequency	Calibrated against a 8MHz reference at 25°C, over [-40, +125]°C, over [1.62, 3.63]V	7.54	8	8.19	MHz
		Calibrated against a 8MHz reference at 25°C, at V_{DD}=3.3V	7.94	8	8.06	
		Calibrated against a 8MHz reference at 25°C, over [1.62, 3.63]V	7.92	8	8.06	
I_{OSC8M}	Current consumption	IIDLEIDLE2 on OSC32K versus IDLE2 on calibrated OSC8M enabled at 8MHz (FRANGE=1, PRESC=0)		64	96	µA
$t_{STARTUP}$	Startup time		-	2.4	3.3	µs
Duty	Duty cycle		-	50	-	%

39.8.7 Fractional Digital Phase Locked Loop (FDPLL96M) Characteristics

Table 39-47. FDPLL96M Characteristics(1) (Device Variant A)

Symbol	Parameter	Conditions	Min.	Typ.	Max.	Units
f_{IN}	Input frequency		32	-	2000	KHz
f_{OUT}	Output frequency		48	-	96	MHz
$I_{FDPLL96M}$	Current consumption	f_{IN}= 32 kHz, f_{OUT}= 48 MHz	-	500	700	µA
		f_{IN}= 32 kHz, f_{OUT}= 96 MHz	-	900	1200	
J_p	Period jitter	f_{IN}= 32 kHz, f_{OUT}= 48 MHz	-	1.5	2.0	%
		f_{IN}= 32 kHz, f_{OUT}= 96 MHz	-	3.0	10.0	
		f_{IN}= 2 MHz, f_{OUT}= 48 MHz	-	1.3	2.0	
		f_{IN}= 2 MHz, f_{OUT}= 96 MHz	-	3.0	7.0	
t_{LOCK}	Lock Time	After start-up, time to get lock signal. f_{IN}= 32 kHz, f_{OUT}= 96 MHz	-	1.3	2	ms
		f_{IN}= 2 MHz, f_{OUT}= 96 MHz	-	25	50	µs

Downloaded from Arrow.com.

.....continued						
Symbol	**Parameter**	**Conditions**	**Min.**	**Typ.**	**Max.**	**Units**
Duty	Duty cycle		40	50	60	%

Table 39-48. FDPLL96M Characteristics(1) (Device Variant B and L with Silicon Revision E)

Symbol	Parameter	Conditions	Min.	Typ.	Max.	Units
f_{IN}	Input frequency		32	-	2000	KHz
f_{OUT}	Output frequency		48	-	96	MHz
$I_{FDPLL96M}$	Current consumption	f_{IN}= 32 kHz, f_{OUT}= 48 MHz	-	500	740	µA
		f_{IN}= 32 kHz, f_{OUT}= 96 MHz	-	900	1262	
J_p	Period jitter	f_{IN}= 32 kHz, f_{OUT}= 48 MHz	-	1.5	2.5	%
		f_{IN}= 32 kHz, f_{OUT}= 96 MHz	-	4.0	10.5	
		f_{IN}= 2 MHz, f_{OUT}= 48 MHz	-	1.6	2.5	
		f_{IN}= 2 MHz, f_{OUT}= 96 MHz	-	4.6	11.0	
t_{LOCK}	Lock Time	After start-up, time to get lock signal. f_{IN}= 32 kHz, f_{OUT}= 96 MHz	-	1.2	2	ms
		f_{IN}= 2 MHz, f_{OUT}= 96 MHz	-	25	50	µs
Duty	Duty cycle		40	50	60	%

Table 39-49. FDPLL96M Characteristics(1) (Device Variant B, C, D and L with Silicon Revision F and G)

Symbol	Parameter	Conditions	Min.	Typ.	Max.	Units
f_{IN}	Input frequency		32	-	2000	KHz
f_{OUT}	Output frequency		48	-	96	MHz
$I_{FDPLL96M}$	Current consumption	f_{IN}= 32 kHz, f_{OUT}= 48 MHz	-	500	-	µA
		f_{IN}= 32 kHz, f_{OUT}= 96 MHz	-	900	-	
J_p	Period jitter	f_{IN}= 32 kHz, f_{OUT}= 48 MHz	-	2.1	3.2	%
		f_{IN}= 32 kHz, f_{OUT}= 96 MHz	-	3.8	9.2	
		f_{IN}= 2 MHz, f_{OUT}= 48 MHz	-	2.2	3.4	
		f_{IN}= 2 MHz, f_{OUT}= 96 MHz	-	5.0	10.5	
t_{LOCK}	Lock Time	After start-up, time to get lock signal. f_{IN}= 32 kHz, f_{OUT}= 96 MHz	-	1.2	2	ms
		f_{IN}= 2 MHz, f_{OUT}= 96 MHz	-	25	50	µs
Duty	Duty cycle		40	50	60	%

Note:

1. All values have been characterized with FILTSEL[1/0] as default value.

39.8.8 PTC Characteristics at 125°C

The values in the Power Consumption table below are measured values of power consumption under the following conditions:

Operating Conditions

Downloaded from Arrow.com.

VDD = 3.3V

Clocks

OSC8M used as main clock source, running undivided at 8MHz

CPU is running on flash with 0 wait states, at 8MHz

PTC is running at 4MHz

PTC Configuration

Mutual-capacitance mode

One touch channel

System Configuration

Standby sleep mode enabled

RTC running on OSCULP32K: used to define the PTC scan rate, through the event system

Drift Calibration disabled: no interrupts, PTC scans are performed in standby mode

Drift Calibration enabled: RTC interrupts (wakeup) the CPU to perform PTC scans. PTC drift calibration is performed every 1.5 sec.

Table 39-50. Power Consumption (1)

Symbol	Parameters	Drift Calibration	PTC scan rate (msec)	Oversamples	Ta	Typ.	Max	Units
IDD (2)	Current Consumption	Disabled	10	4	Max 125°C Typ 25°C	66	791	µA
				16		75	803	
			50	4		61	787	
				16		63	791	
			100	4		61	788	
				16		62	790	
			200	4		60	788	
				16		61	789	
		Enabled	10	4		71	802	
				16		80	813	
			50	4		63	792	
				16		65	795	
			100	4		62	791	
				16		63	793	
			200	4		62	790	
				16		63	791	

Notes:

1. These are based on characterization.
2. On this table, the LDO Voltage Regulator is enabled in Standby mode (SYSCTRL.VREG.RUNSTDBY = 1).

39.8.9 USB Characteristics

The USB shares the same characteristics as in the -40°C to 85°C.

Downloaded from Arrow.com.

40. AEC-Q100 125°C Specifications

40.1 Disclaimer

All typical values are measured at T = 25°C unless otherwise specified. All minimum and maximum values are valid across operating temperature and voltage unless otherwise specified.

40.2 Thermal Considerations

40.2.1 Thermal Resistance Data

The following Table summarizes the thermal resistance data depending on the package.

Table 40-1. Thermal Resistance Data

Package Type	θ_{JA}	θ_{JC}
32-pin QFN (Wettable Flanks)	40.5°C/W	16.0°C/W
48-pin QFN (Wettable Flanks)	31.9°C/W	11.7°C/W
64-pin QFN (Wettable Flanks)	32.5°C/W	11.3°C/W
32-pin TQFP	64.7°C/W	23.1°C/W
48-pin TQFP	63.6°C/W	12.2°C/W
64-pin TQFP	60.9°C/W	12.2°C/W

40.2.2 Junction Temperature

The average chip-junction temperature, T_J, in °C can be obtained from the following:

1. $T_J = T_A + (P_D \times \theta_{JA})$
2. $T_J = T_A + (P_D \times (\theta_{HEATSINK} + \theta_{JC}))$

where:

- θ_{JA} = Package thermal resistance, Junction-to-ambient (°C/W), see Thermal Resistance Data
- θ_{JC} = Package thermal resistance, Junction-to-case thermal resistance (°C/W), see Thermal Resistance Data
- $\theta_{HEATSINK}$ = Thermal resistance (°C/W) specification of the external cooling device
- P_D = Device power consumption (W)
- T_A = Ambient temperature (°C)

From the first equation, the user can derive the estimated lifetime of the chip and decide if a cooling device is necessary or not. If a cooling device has to be fitted on the chip, the second equation should be used to compute the resulting average chip-junction temperature T_J in °C.

40.3 Absolute Maximum Ratings

Stresses beyond those listed in the table below may cause permanent damage to the device. This is a stress rating only, and functional operation of the device at these or other conditions beyond those indicated in the operational sections of this specification is not implied. Exposure to absolute maximum rating conditions for extended periods may affect device reliability.

Downloaded from Arrow.com.

Table 40-2. Absolute Maximum Ratings

Symbol	Description	Conditions	Min.	Max.	Units
VDD	Power Supply Voltage		0	3.8	V
IVDD	Current into a VDD pin		-	28 (1)	mA
IGND	Current out of a GND pin		-	39 (1)	mA
VPIN	Pin voltage with respect to GND and VDD		GND-0.3V	VDD+0.3V	V
TSTORAGE	Storage temperature		-60	150	°C

Note:

1. Maximum source current is 14mA and maximum sink current is 19.5mA per cluster. A cluster is a group of GPIOs, see related links. Also note that each VDD/GND pair is connected to 2 clusters so current consumption through the pair will be a sum of the clusters source/sink currents.

Related Links

GPIO Clusters

40.4 General Operating Ratings

The device must operate within the ratings listed in the following table in order for all other electrical characteristics and typical characteristics of the device to be valid.

Table 40-3. General Operating Conditions

Symbol	Description	Conditions	Min.	Typ.	Max.	Units
VDD	Power Supply Voltage		2.7	3.3	3.63	V
VDDANA	Analog supply voltage		2.7	3.3	3.63	V
TA	Temperature range		-40	25	125	°C
TJ	Junction Temperature		-	-	145	°C

40.5 Supply Characteristics

The following characteristics are applicable to the operating temperature range: TA = -40°C to 125°C, unless otherwise specified and are valid for a junction temperature up to TJ = 145°C.

Table 40-4. Supply Characteristics

Symbol	Conditions	Voltage		Units
		Min	Max	
V_{DDIO}	Full Voltage Range	2.7	3.63	V
V_{DDIN}				
V_{DDANA}				

Downloaded from Arrow.com.

Table 40-5. Supply Rates

Symbol	Conditions	Fall Rate	Rise Rate	Units
		Max	Max	
V_{DDIO}	DC supply peripheral I/Os, internal regulator and analog supply voltage	0.05	0.1	V/µs
V_{DDIN}				
V_{DDANA}				

Note: To secure power up and power down sequence, enabling BOD33 is recommended.

Related Links

Power Supply and Start-Up Considerations

40.6 Maximum Clock Frequencies

Table 40-6. Maximum GCLK Generator Output Frequencies (Device Variant A)

Symbol	Description	Conditions	Max	Units
$f_{GCLKGEN0}$ / f_{GCLK_MAIN}	GCLK Generator Output Frequency	Undivided	64	MHz
$f_{GCLKGEN1}$		Divided	32	MHz
$f_{GCLKGEN2}$				
$f_{GCLKGEN3}$				
$f_{GCLKGEN4}$				
$f_{GCLKGEN5}$				

Table 40-7. Maximum Peripheral Clock Frequencies (Device Variant A)

Symbol	Description	Max.	Units
f_{CPU}	CPU clock frequency	32	MHz
f_{AHB}	AHB clock frequency	32	MHz
f_{APBA}	APBA clock frequency	32	MHz
f_{APBB}	APBB clock frequency	32	MHz
f_{APBC}	APBC clock frequency	32	MHz
$f_{GCLK_DFLL48M_REF}$	DFLL48M Reference clock frequency	33	kHz
f_{GCLK_DPLL}	FDPLL96M Reference clock frequency	2	MHz
$f_{GCLK_DPLL_32K}$	FDPLL96M 32k Reference clock frequency	32	kHz
f_{GCLK_WDT}	WDT input clock frequency	48	MHz
f_{GCLK_RTC}	RTC input clock frequency	48	MHz
f_{GCLK_EIC}	EIC input clock frequency	48	MHz
f_{GCLK_USB}	USB input clock frequency	48	MHz
$f_{GCLK_EVSYS_CHANNEL_0}$	EVSYS channel 0 input clock frequency	48	MHz
$f_{GCLK_EVSYS_CHANNEL_1}$	EVSYS channel 1 input clock frequency	48	MHz
$f_{GCLK_EVSYS_CHANNEL_2}$	EVSYS channel 2 input clock frequency	48	MHz

Downloaded from Arrow.com.

.....continued

Symbol	Description	Max.	Units
$f_{GCLK_EVSYS_CHANNEL_3}$	EVSYS channel 3 input clock frequency	48	MHz
$f_{GCLK_EVSYS_CHANNEL_4}$	EVSYS channel 4 input clock frequency	48	MHz
$f_{GCLK_EVSYS_CHANNEL_5}$	EVSYS channel 5 input clock frequency	48	MHz
$f_{GCLK_EVSYS_CHANNEL_6}$	EVSYS channel 6 input clock frequency	48	MHz
$f_{GCLK_EVSYS_CHANNEL_7}$	EVSYS channel 7 input clock frequency	48	MHz
$f_{GCLK_EVSYS_CHANNEL_8}$	EVSYS channel 8 input clock frequency	48	MHz
$f_{GCLK_EVSYS_CHANNEL_9}$	EVSYS channel 9 input clock frequency	48	MHz
$f_{GCLK_EVSYS_CHANNEL_10}$	EVSYS channel 10 input clock frequency	48	MHz
$f_{GCLK_EVSYS_CHANNEL_11}$	EVSYS channel 11 input clock frequency	48	MHz
$f_{GCLK_SERCOMx_SLOW}$	Common SERCOM slow input clock frequency	48	MHz
$f_{GCLK_SERCOM0_CORE}$	SERCOM0 input clock frequency	48	MHz
$f_{GCLK_SERCOM1_CORE}$	SERCOM1 input clock frequency	48	MHz
$f_{GCLK_SERCOM2_CORE}$	SERCOM2 input clock frequency	48	MHz
$f_{GCLK_SERCOM3_CORE}$	SERCOM3 input clock frequency	48	MHz
$f_{GCLK_SERCOM4_CORE}$	SERCOM4 input clock frequency	48	MHz
$f_{GCLK_SERCOM5_CORE}$	SERCOM5 input clock frequency	48	MHz
f_{GCLK_TCC0}, f_{GCLK_TCC1}	TCC0, TCC1 input clock frequency	80	MHz
f_{GCLK_TCC2}, f_{GCLK_TC3}	TCC2,TC3 input clock frequency	80	MHz
f_{GCLK_TC4}, f_{GCLK_TC5}	TC4, TC5 input clock frequency	48	MHz
f_{GCLK_TC6}, f_{GCLK_TC7}	TC6,TC7 input clock frequency	48	MHz
f_{GCLK_ADC}	ADC input clock frequency	48	MHz
$f_{GCLK_AC_DIG}$	AC digital input clock frequency	48	MHz
$f_{GCLK_AC_ANA}$	AC analog input clock frequency	64	kHz
f_{GCLK_DAC}	DAC input clock frequency	48	MHz
f_{GCLK_PTC}	PTC input clock frequency	48	MHz
$f_{GCLK_I2S_0}$	I2S serial 0 input clock frequency	13	MHz
$f_{GCLK_I2S_1}$	I2S serial 1 input clock frequency	13	MHz

© 2021 Microchip Technology Inc. and its subsidiaries

Downloaded from Arrow.com.

Table 40-8. Maximum GCLK Generator Output Frequencies (Device Variant B, D)

Symbol	Description	Conditions	Max	Units
$f_{GCLKGEN0}$ / f_{GCLK_MAIN}	GCLK Generator Output Frequency	Undivided	96	MHz
$f_{GCLKGEN1}$		Divided	48	MHz
$f_{GCLKGEN2}$				
$f_{GCLKGEN3}$				
$f_{GCLKGEN4}$				
$f_{GCLKGEN5}$				

Table 40-9. Maximum Peripheral Clock Frequencies (Device Variant B, D)

Symbol	Description	Max.	Units
f_{CPU}	CPU clock frequency	48	MHz
f_{AHB}	AHB clock frequency	48	MHz
f_{APBA}	APBA clock frequency	48	MHz
f_{APBB}	APBB clock frequency	48	MHz
f_{APBC}	APBC clock frequency	48	MHz
$f_{GCLK_DFLL48M_REF}$	DFLL48M Reference clock frequency	33	KHz
f_{GCLK_DPLL}	FDPLL96M Reference clock frequency	2	MHz
$f_{GCLK_DPLL_32K}$	FDPLL96M 32k Reference clock frequency	32	KHz
f_{GCLK_WDT}	WDT input clock frequency	48	MHz
f_{GCLK_RTC}	RTC input clock frequency	48	MHz
f_{GCLK_EIC}	EIC input clock frequency	48	MHz
f_{GCLK_USB}	USB input clock frequency	48	MHz
$f_{GCLK_EVSYS_CHANNEL_0}$	EVSYS channel 0 input clock frequency	48	MHz
$f_{GCLK_EVSYS_CHANNEL_1}$	EVSYS channel 1 input clock frequency	48	MHz
$f_{GCLK_EVSYS_CHANNEL_2}$	EVSYS channel 2 input clock frequency	48	MHz
$f_{GCLK_EVSYS_CHANNEL_3}$	EVSYS channel 3 input clock frequency	48	MHz
$f_{GCLK_EVSYS_CHANNEL_4}$	EVSYS channel 4 input clock frequency	48	MHz
$f_{GCLK_EVSYS_CHANNEL_5}$	EVSYS channel 5 input clock frequency	48	MHz
$f_{GCLK_EVSYS_CHANNEL_6}$	EVSYS channel 6 input clock frequency	48	MHz
$f_{GCLK_EVSYS_CHANNEL_7}$	EVSYS channel 7 input clock frequency	48	MHz
$f_{GCLK_EVSYS_CHANNEL_8}$	EVSYS channel 8 input clock frequency	48	MHz
$f_{GCLK_EVSYS_CHANNEL_9}$	EVSYS channel 9 input clock frequency	48	MHz
$f_{GCLK_EVSYS_CHANNEL_10}$	EVSYS channel 10 input clock frequency	48	MHz
$f_{GCLK_EVSYS_CHANNEL_11}$	EVSYS channel 11 input clock frequency	48	MHz
$f_{GCLK_SERCOMx_SLOW}$	Common SERCOM slow input clock frequency	48	MHz

Downloaded from Arrow.com.

.....continued

Symbol	Description	Max.	Units
$f_{GCLK_SERCOM0_CORE}$	SERCOM0 input clock frequency	48	MHz
$f_{GCLK_SERCOM1_CORE}$	SERCOM1 input clock frequency	48	MHz
$f_{GCLK_SERCOM2_CORE}$	SERCOM2 input clock frequency	48	MHz
$f_{GCLK_SERCOM3_CORE}$	SERCOM3 input clock frequency	48	MHz
$f_{GCLK_SERCOM4_CORE}$	SERCOM4 input clock frequency	48	MHz
$f_{GCLK_SERCOM5_CORE}$	SERCOM5 input clock frequency	48	MHz
$f_{GCLK_TCC0,\ GCLK_TCC1}$	TCC0, TCC1 input clock frequency	96	MHz
f_{GCLK_TCC2},$f_{GCLK_TCC3,\ GCLK_TC3}$	TCC2, TCC3, TC3 input clock frequency	96	MHz
$f_{GCLK_TC4,\ GCLK_TC5}$	TC4, TC5 input clock frequency	48	MHz
$f_{GCLK_TC6,\ GCLK_TC7}$	TC6,TC7 input clock frequency	48	MHz
f_{GCLK_ADC}	ADC input clock frequency	48	MHz
$f_{GCLK_AC_DIG}$	AC digital input clock frequency	48	MHz
$f_{GCLK_AC_ANA}$	AC analog input clock frequency	64	kHz
f_{GCLK_DAC}	DAC input clock frequency	48	MHz
f_{GCLK_PTC}	PTC input clock frequency	48	MHz
$f_{GCLK_I2S_0}$	I^2S serial 0 input clock frequency	13	MHz
$f_{GCLK_I2S_1}$	I^2S serial 1 input clock frequency	13	MHz

40.7 Power Consumption

The values provided in the following table are measured values of power consumption, which are valid under the following conditions, except where noted:

- Operating conditions:
  - VDDIN = 3.3V
- Wake up time from Sleep mode is measured from the edge of the wakeup signal to the execution of the first instruction fetched in Flash.
- Oscillators:
  - XOSC (Crystal scillator) stopped
  - XOSC32K (32 kHz Crystal Oscillator) running with external 32 kHz crystal
  - DFLL48M using XOSC32K as reference and running at 48 MHz
- Clocks:
  - DFLL48M used as main clock source, except otherwise specified.
  - CPU, AHB clocks undivided
  - APBA clock divided by 4
  - APBB and APBC bridges off
- The following AHB module clocks are running: NVMCTRL, APBA bridge
  - All other AHB clocks stopped
- The following peripheral clocks running: PM, SYSCTRL, RTC
  - All other peripheral clocks stopped
- I/Os are inactive with internal pull-up
- CPU is running on Flash with 1 wait states

Downloaded from Arrow.com.

- NVMCTRL cache enabled
- BOD33 disabled

Table 40-10. Current Consumption (Device Variant A)

Mode	Conditions	TA	VCC	Typ.	Max.	Units
ACTIVE	CPU running a While 1 algorithm	25°C	3.3V	3.4	3.9	mA
		125°C	3.3V	3.8	6.1	
	CPU running a While 1 algorithm, with GCLKIN as reference	25°C	3.3V	60*Freq+136	81*Freq+126	µA (with freq. in MHz)
		125°C	3.3V	62*Freq+498	70*Freq+1780	
	CPU running a Fibonacci algorithm	25°C	3.3V	4.6	5.0	mA
		125°C	3.3V	5.0	7.3	
	CPU running a Fibonacci algorithm, with GCLKIN as reference	25°C	3.3V	92*Freq+113	99*Freq+141	µA (with freq. in MHz)
		125°C	3.3V	92*Freq+503	91*Freq+1794	
	CPU running a CoreMark algorithm	25°C	3.3V	6.3	6.8	mA
		125°C	3.3V	6.7	8.6	
	CPU running a CoreMark algorithm, with GCLKIN as reference	25°C	3.3V	118*Freq+116	131*Freq+141	µA (with freq. in MHz)
		125°C	3.3V	121*Freq+506	122*Freq+1792	
IDLE0	Default operating conditions	25°C	3.3V	2.0	2.2	mA
		125°C	3.3V	2.4	4.0	
IDLE1	Default operating conditions	25°C	3.3V	1.5	1.6	
		125°C	3.3V	1.8	3.3	
IDLE2	Default operating conditions	25°C	3.3V	1.2	1.3	
		125°C	3.3V	1.5	3.0	
STANDBY (1)	XOSC32K running RTC running at 1kHz	25°C	3.3V	4.2	13.3	µA
		125°C (1)	3.3V	430.6	1128.0	
	XOSC32K and RTC stopped	25°C	3.3V	2.9	12.2	
		125°C(1)	3.3V	428.6	1126.0	

Note:

1. Measurements done with VREG.bit.RUNSTDBY = 1.

Downloaded from Arrow.com.

Table 40-11. Current Consumption (Device Variant B)

Mode	Conditions	TA	Vcc	Typ.	Max.	Units
ACTIVE	CPU running a While 1 algorithm	25°C	3.3V	2.7	3.1	mA
		125°C	3.3V	3.0	3.5	
	CPU running a While 1 algorithm, with GCLKIN as reference	25°C	3.3V	52*Freq+108	60*Freq+124	µA (with freq. in MHz)
		125°C	3.3V	53*Freq+377	48*Freq+1104	
	CPU running a Fibonacci algorithm	25°C	3.3V	3.3	3.6	mA
		125°C	3.3V	3.6	4.1	
	CPU running a Fibonacci algorithm, with GCLKIN as reference	25°C	3.3V	66*Freq+108	71*Freq+126	µA (with freq. in MHz)
		125°C	3.3V	66*Freq+375	62*Freq+1113	
	CPU running a CoreMark algorithm	25°C	3.3V	4.5	5.0	mA
		125°C	3.3V	4.9	5.4	
	CPU running a CoreMark algorithm, with GCLKIN as reference	25°C	3.3V	90*Freq+109	97*Freq+125	µA (with freq. in MHz)
		125°C	3.3V	92*Freq+376	89*Freq+1103	
IDLE0	Default operating conditions	25°C	3.3V	1.5	1.6	mA
		125°C	3.3V	1.8	2.4	
IDLE1	Default operating conditions	25°C	3.3V	1.0	1.0	
		125°C	3.3V	1.2	1.8	
IDLE2	Default operating conditions	25°C	3.3V	0.8	0.8	
		125°C	3.3V	1.0	1.6	
STANDBY (1)	XOSC32K running RTC running at 1kHz	25°C	3,3V	61.0	83.0	µA
		125°C	3,3V	294.0	782.0	
	XOSC32K and RTC stopped	25°C	3,3V	60.0	82.0	
		125°C	3,3V	292.0	780.0	

Note:

1. Measurements done with VREG.bit.RUNSTDBY = 1.

Downloaded from Arrow.com.

Table 40-12. Current Consumption (Variant D)

Mode	Conditions	Ta	Vcc	Typ.	Max	Units
ACTIVE	CPU running a While 1 algorithm	25°C	3.3V	2.8	3.1	mA
		125°C	3.3V	3.5	4.1	
	CPU running a While 1 algorithm, with GCLKIN as reference	25°C	3.3V	56*Freq+116	60*Freq+131	µA (with freq in MHz)
		125°C	3.3V	57*Freq+395	55*Freq+1232	
	CPU running a Fibonacci algorithm	25°C	3.3V	3.7	4.1	mA
		125°C	3.3V	4.5	5.1	
	CPU running a Fibonacci algorithm, with GCLKIN as reference	25°C	3.3V	74*Freq+116	80*Freq+125	µA (with freq in MHz)
		125°C	3.3V	75*Freq+397	72*Freq+1231	
	CPU running a CoreMark algorithm	25°C	3.3V	4.2	4.7	mA
		125°C	3.3V	5.1	5.9	
	CPU running a CoreMark algorithm, with GCLKIN as reference	25°C	3.3V	86*Freq+117	92*Freq+127	µA (with freq in MHz)
		125°C	3.3V	88*Freq+399	85*Freq+1230	
IDLE0		25°C	3.3V	1.5	1.7	mA
		125°C	3.3V	2.0	2.7	
IDLE1		25°C	3.3V	1.0	1.1	
		125°C	3.3V	1.4	2.1	
IDLE2		25°C	3.3V	0.8	0.9	
		125°C	3.3V	1.1	1.8	
STANDBY (1)	XOSC32K running RTC running at 1kHz	25°C	3,3V	61.0	83.0	µA
		125°C	3,3V	294.0	782.0	
	XOSC32K and RTC stopped	25°C	3,3V	60.0	82.0	
		125°C	3,3V	292.0	780.0	

Note:

1. Measurements done with VREG.bit.RUNSTDBY = 1.

Table 40-13. Wake-Up Time

Mode	Conditions	TA	Min.	Typ.	Max.	Units
IDLE0	OSC8M used as main clock source, Cache disabled	125°C	-	4	-	µs
IDLE1	OSC8M used as main clock source, Cache disabled		-	14.9	-	
IDLE2	OSC8M used as main clock source, Cache disabled		-	15.8	-	
STANDBY	OSC8M used as main clock source, Cache disabled		-	20.6	-	

For Measurement Schematics, refer to Power Supply Schematic.

Downloaded from Arrow.com.

40.8 I/O Pin Characteristics

Table 40-14. Normal I/O Pin Characteristics

Symbol	Parameter	Conditions	Min.	Typ.	Max.	Units
V_{IL}	Input low-level voltage	VDD=2.7V-3.63V	-	-	0.3*VDD	V
V_{IH}	Input high-level voltage	VDD=2.7V-3.63V	0.55*VDD	-	-	
V_{OL}	Output low-level voltage	VDD>2.7V, IOL max.	-	0.1*VDD	0.2*VDD	
V_{OH}	Output high-level voltage	VDD>2.7V, IOH max.	0.8*VDD	0.9*VDD	-	
I_{OL}	Output low-level current	VDD=2.7V-3V,	-	-	-	mA
		PORT.PINCFG.DRVSTR=0	-	-	1	
		VDD=3V-3.63V,	-	-	-	
		PORT.PINCFG.DRVSTR=0	-	-	2.5	
		VDD=2.7V-3V,	-	-	-	
		PORT.PINCFG.DRVSTR=1	-	-	3	
		VDD = 3V-3.63V,	-	-	-	
		PORT.PINCFG.DRVSTR=1	-	-	10	
I_{OH}	Output high-level current	VDD=2.7V-3V,	-	-	-	
		PORT.PINCFG.DRVSTR=0	-	-	0.7	
		VDD=3V-3.63V,	-	-	-	
		PORT.PINCFG.DRVSTR=0	-	-	2	
		VDD=2.7V-3V,	-	-	-	
		PORT.PINCFG.DRVSTR=1	-	-	2	
		VDD=3V-3.63V,	-	-	-	
		PORT.PINCFG.DRVSTR=1	-	-	7	
t_{RISE}	Rise time(1)	Load = 20pF, VDD = 3.3V	-	-	15	ns
		PORT.PINCFG.DRVSTR=1	-	-	-	
		Load = 5pF, VDD = 3.3V	-	-	15	
		PORT.PINCFG.DRVSTR=0	-	-	-	
t_{FALL}	Fall time(1)	Load = 20pF, VDD = 3.3V	-	-	15	
		PORT.PINCFG.DRVSTR=1	-	-	-	
		Load = 5pF, VDD = 3.3V	-	-	15	
		PORT.PINCFG.DRVSTR=0	-	-	-	
I_{LEAK}	Input leakage current	Pull-up resistors disabled	-1	+/-0.015	1	µA

Downloaded from Arrow.com.

Table 40-15. I^2C Pins Characteristics in I^2C Configuration

Symbol	Parameter	Condition	Min.	Typ.	Max.	Units
V_{IL}	Input low-level voltage	VDD = 2.7V-3.63V	-	-	0.3*VDD	V
V_{IH}	Input high-level voltage	VDD = 2.7V-3.63VI	0.55*VDD	-	-	
V_{HYS}	Hysteresis of Schmitt trigger inputs	-	0.08*VDD	-	-	
V_{OL}	Output low-level voltage	VDD> 2.0V	-	-	-	
		IOL = 3 mA	-	-	0.4	
		VDD≤2.0V	-	-	-	
		IOL = 2 mA	-	-	0.2*VDD	
CI	Capacitance for each I/O Pin	-	-	-	-	pF
I_{OL}	Output low-level current	VOL = 0.4V	-	-	-	mA
		Standard, Fast and HS Modes	3	-	-	
		VOL = 0.4V	-	-	-	
		Fast Mode +	20	-	-	
		VOL = 0.6V	6	-	-	
f_{SCL}	SCL clock frequency	-	-	-	3.4	MHz
RP	Value of pull-up resistor	fSCL ≤ 100 kHz	-	-	-	ohms
		fSCL > 100 kHz	-	-	-	-

Table 40-16. I2C Pin Characteristics in I/O Configuration

Symbol	Parameter	Conditions	Min.	Typ.	Max.	Units
R_{PULL}	Pull-up - Pull-down resistance	-	20	40	60	kΩ
V_{IL}	Input low-level voltage	VDD = 2.7V-3.63V	-	-	0.3*VDD	V
V_{IH}	Input high-level voltage	VDD = 2.7V-3.63V	0.55*VDD	-	-	
V_{OL}	Output low-level voltage	VDD>2.7V, IOL max	-	0.1*VDD	0.2*VDD	
V_{OH}	Output high-level voltage	VDD>2.7V, IOH max	0.8*VDD	0.9*VDD	-	

Downloaded from Arrow.com.

.....continued						
Symbol	**Parameter**	**Conditions**	**Min.**	**Typ.**	**Max.**	**Units**
I_{OL}	Output low-level current	VDD = 2.7V-3V,	-	-	-	mA
		PORT.PINCFG.DRVSTR=0	-	-	1	
		VDD = 3V-3.63V,	-	-	-	
		PORT.PINCFG.DRVSTR=0	-	-	2.5	
		VDD = 2.7V-3V,	-	-	-	
		PORT.PINCFG.DRVSTR=1	-	-	3	
		VDD = 3V-3.63V,	-	-	-	
		PORT.PINCFG.DRVSTR=1	-	-	10	
I_{OH}	Output high-level current	VDD = 2.7V-3V,	-	-	-	
		PORT.PINCFG.DRVSTR=0	-	-	0.7	
		VDD = 3V-3.63V,	-	-	-	
		PORT.PINCFG.DRVSTR=0	-	-	2	
		VDD = 2.7V-3V,	-	-	-	
		PORT.PINCFG.DRVSTR = 1	-	-	2	
		VDD = 3V-3.63V,	-	-	-	
		PORT.PINCFG.DRVSTR = 1	-	-	7	
t_{RISE}	Rise time(1)	load = 20 pF, VDD = 3.3V	-	-	15	ns
		PORT.PINCFG.DRVSTR=1	-	-	-	
		Load = 5 pF, VDD = 3.3V	-	-	15	
		PORT.PINCFG.DRVSTR=0	-	-	-	
t_{FALL}	Fall time(1)	load = 20 pF, VDD = 3.3V	-	-	15	
		PORT.PINCFG.DRVSTR = 1	-	-	-	
		load = 5 pF, VDD = 3.3V	-	-	15	
		PORT.PINCFG.DRVSTR = 0	-	-	-	
I_{LEAK}	Input leakage current	Pull-up resistors disabled	-1	+/-0.015	1	µA

Table 40-17. PA24/PA25 Pins Characteristics

Symbol	Parameter	Conditions	Min.	Typ.	Max.	Units
R_{PULL}	Pull-up - Pull-down resistance	-	20	40	60	kΩ
V_{IL}	Input low-level voltage	VDD = 2.7V-3.63V	-	-	0.29*VDD	V
V_{IH}	Input high-level voltage	VDD = 2.7V-3.63V	0.55*VDD	-	-	
V_{OL}	Output low-level voltage	VDD>2.7V, IOL max	-	0.1*VDD	0.2*VDD	
V_{OH}	Output high-level voltage	VDD>2.7V, IOH max	0.8*VDD	0.9*VDD	-	

Downloaded from Arrow.com.

.....continued						
Symbol	Parameter	Conditions	Min.	Typ.	Max.	Units
I_{OL}	Output low-level current	VDD = 2.7V-3V,	-	-	3	mA
		VDD=3V-3.63V,	-	-	8	
I_{OH}	Output high-level current	VDD=2.7V-3V,	-	-	2	
		VDD = 3V-3.63V,	-	-	7	
t_{RISE}	Rise time(1)	Load = 5pF, VDD = 3.3V	-	-	15	ns
		Load = 20pF, VDD = 3.3V				
t_{FALL}	Fall time(1)	Load = 5pF, VDD = 3.3V	-	-	15	
		Load = 20pF, VDD = 3.3V				
I_{LEAK}	Input leakage current	Pull-up resistors disabled	-1	+/-0.015	1	µA

Notes:

1. These values are based on simulation. They are not covered by production test limits or characterization.
2. The I^2C pins have faster fall-time in I^2C Fast Plus mode (Fm+) and High Speed mode (HS). The fall-time can be in 7 ns range in Fm+ mode, and in 5 ns range in HS mode.
3. USB pads PA24, PA25 compliant with USB standard in USB mode.

40.9 Analog Characteristics

40.9.1 Power-On Reset (POR) Characteristics

Table 40-18. POR Characteristics (Device Variant A)

Symbol	Parameters	Conditions	Min.	Typ.	Max.	Unit
V_{POT+}	Voltage threshold Level on VDDIN rising	VDD falls at 1V/ms or slower	1.27	1.44	1.62	V
V_{POT-}	Voltage threshold Level on VDDIN falling		0.72	1.07	1.37	V

Table 40-19. POR Characteristics (Device Variant B and D)

Symbol	Parameters	Conditions	Min.	Typ.	Max.	Unit
V_{POT+}	Voltage threshold Level on VDDIN rising	VDD falls at 1V/ms or slower	1.27	1.45	1.62	V
V_{POT-}	Voltage threshold Level on VDDIN falling		0.53	0.99	1.32	V

© 2021 Microchip Technology Inc. and its subsidiaries

Downloaded from Arrow.com.

Figure 40-1. POR Operating Principle

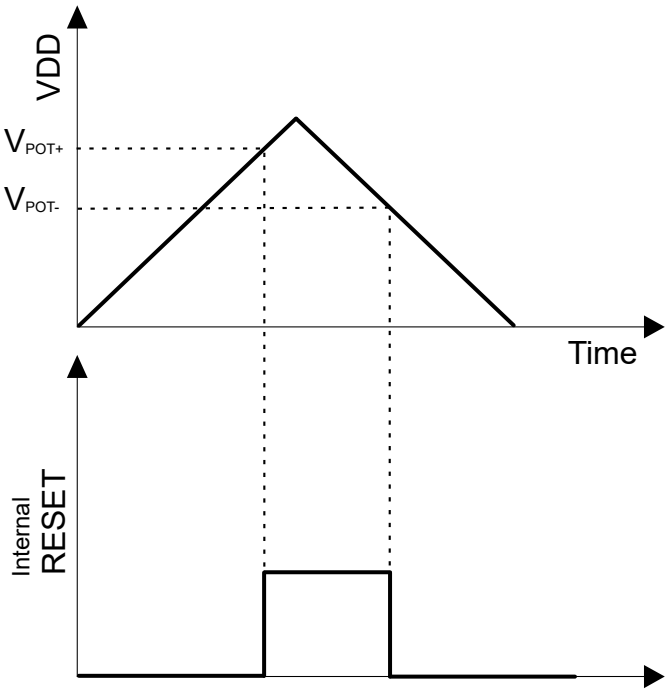

40.9.2 Brown-Out Detectors (BOD) Characteristics

Table 40-20. BOD33 Level Value (Device Variant A and B)

Symbol	BOD33.LEVEL	Conditions	Min.	Typ.	Max.	Units
V_{BOD+}	34	Hysteresis ON	-	2.68	2.74	V
V_{BOD-} or V_{BOD}	34	Hysteresis ON or Hysteresis OFF	2.51	2.59	2.65	

Table 40-21. BOD33 Level Value (Device Variant D)

Symbol	BOD33.LEVEL	Conditions	Min.	Typ.	Max.	Units
VBOD+	34	Hysteresis ON	-	2.69	2.76	V
VBOD- or VBOD	34	Hysteresis ON or OFF	2.51	2.59	2.66	

Note: Refer to the Memories table NVM User Row Mapping for the BOD33 default value settings.

Table 40-22. BOD33 Characteristics (Device Variant A)

Symbol	Parameter	Conditions		Min.	Typ.	Max.	Units
	Step size, between adjacent values in BOD33.LEVEL			-	34	-	mV
V_{HYST}	V_{BOD+} - V_{BOD-}	Hysteresis ON		35	-	170	mV
t_{DET}(1)	Detection time	Time with $V_{DDANA} < V_{TH}$ necessary to generate a reset signal		-	0.9	-	µs

Downloaded from Arrow.com.

.....continued

Symbol	Parameter	Conditions		Min.	Typ.	Max.	Units
I_{BOD33}	Current Consumption	IDLE2, Mode CONT	25°C	-	33	48	µA
			-40 to 125	-	-	53.0	
		IDLE2, Mode SAMPL	25°C	-	0.03	0.50	
			-40 to 125	-	-	2.3	
		STDBY, Mode SAMPL	25°C	-	0.13	0.50	
			-40 to 125	-	-	1.7	
$t_{STARTUP}$(1)	Start-up time			-	1.2	-	µs

Table 40-23. BOD33 Characteristics (Device Variant B and D)

Symbol	Parameter	Conditions		Min.	Typ.	Max.	Units
	Step size, between adjacent values in BOD33.LEVEL			-	34	-	mV
V_{HYST}	V_{BOD+} - V_{BOD-}	Hysteresis ON		35	-	170	mV
t_{DET}(1)	Detection time	Time with V_{DDANA} < V_{TH} necessary to generate a reset signal		-	0.9(1)	-	µs
I_{BOD33}	Current Consumption	IDLE2, Mode CONT	25°C	-	33	48	µA
			-40 to 125	-	-	53.0	
		IDLE2, Mode SAMPL	25°C	-	0.03	0.50	
			-40 to 125	-	-	3	
		STDBY, Mode SAMPL	25°C	-	0.13	0.50	
			-40 to 125	-	-	1.7	
$t_{STARTUP}$(1)	Start-up time			-	2.2(1)	-	µs

Note:

1. These values are based on simulation. These values are not covered by test limits in production or characterization.

40.9.3 Analog-to-Digital (ADC) Characteristics

Table 40-24. Operating Conditions (Device Variant A)

Symbol	Parameters	Conditions	Min	Typ	Max	Unit
V_{DDANA}	Power supply voltage		2.7	-	3.6	V
Res	Resolution		8	-	12	bits
f_{CLK_ADC}	ADC Clock frequency		30	-	2100	kHz
	Sampling rate(2)	Single shot (with V_{DDANA} > 3.0V)(4)	5	-	300	ksps
		Free running	5	-	350	
	Sampling time(2)		250	-	-	ns

Downloaded from Arrow.com.

.....continued						
Symbol	**Parameters**	**Conditions**	**Min**	**Typ**	**Max**	**Unit**
	Sampling time with DAC as input(2)		3	-	-	µs
	Sampling time with Temp sens as input(2)		10	-	-	µs
	Sampling time with Bandgap as input(2)		10	-	-	µs
	Conversion time(2)	1x Gain	6	-	-	Cycles
V_{REF}	Voltage reference range (VREFA or VREFB)		1	-	V_{DDANA}-0.6	V
INT1V	Internal 1V reference (2,5)		-	1	-	V
INTVCC0	Internal ratiometric reference 0(2)		-	V_{DDANA}/1.48	-	V
INTVCC0 Voltage Error	Internal ratiometric reference 0(2) error	2.0V < V_{DDANA}<3.63V	-1	-	1	%
INTVCC1	Internal ratiometric reference 1(2)	V_{DDANA}>2.0V	-	V_{DDANA}/2	-	V
INTVCC1 Voltage Error	Internal ratiometric reference 1(2) error	2.0V < V_{DDANA}<3.63V	-1	-	1	%
	Conversion range(2)	Differential mode	-V_{REF}/ GAIN	-	+V_{REF}/GAIN	V
		Single-ended mode	0	-	+V_{REF}/GAIN	V
C_{SAMPLE}	Sampling capacitance(2)		-	3.5	-	pF
R_{SAMPLE}	Input channel source resistance(2)		-	-	3.5	kohms
I_{DD}	DC supply current(1)	f_{CLK_ADC} = 2.1MHzl(3)	-	1.25	3.9	mA

Table 40-25. Operating Conditions (Device Variant B and D)

Symbol	Parameters	Conditions	Min	Typ	Max	Unit
V_{DDANA}	Power supply voltage		2.7	-	3.6	V
Res	Resolution		8	-	12	bits
f_{CLK_ADC}	ADC Clock frequency		30	-	2100	kHz
	Sampling rate(1)	Single shot	5	-	300	ksps
		Free running	5	-	350	
	Sampling time(1)		250	-	-	ns
	Sampling time with DAC as input(2)		3	-	-	µs
	Sampling time with Temp sens as input(2)		10	-	-	µs

Downloaded from Arrow.com.

.....continued						
Symbol	**Parameters**	**Conditions**	**Min**	**Typ**	**Max**	**Unit**
	Sampling time with Bandgap as input(2)		10	-	-	µs
	Conversion time(1)	1x Gain	6	-	-	Cycles
V_{REF}	Voltage reference range (VREFA or VREFB)		1	-	V_{DDANA}-0.6	V
INT1V	Internal 1V reference (2,5)		-	1	-	V
INTVCC0	Internal ratiometric reference 0(2)		-	V_{DDANA}/1.48	-	V
INTVCC0 Voltage Error	Internal ratiometric reference 0(2) error	2.0V < V_{DDANA}<3.63V	-1	-	1	%
INTVCC1	Internal ratiometric reference 1(2)	V_{DDANA}>2.0V	-	V_{DDANA}/2	-	V
INTVCC1 Voltage Error	Internal ratiometric reference 1(2) error	2.0V < V_{DDANA}<3.63V	-1	-	1	%
	Conversion range(1)	Differential mode	-V_{REF}/ GAIN	-	+V_{REF}/GAIN	V
		Single-ended mode	0	-	+V_{REF}/GAIN	V
C_{SAMPLE}	Sampling capacitance(2)		-	3.5	-	pF
R_{SAMPLE}	Input channel source resistance(2)		-	-	3.5	kohms
I_{DD}	DC supply current(1)	f_{CLK_ADC} = 2.1MHzl(3)	-	1.25	4.7	mA

Notes:

1. These values are based on characterization. These values are not covered by test limits in production.
2. These values are based on simulation. These values are not covered by test limits in production or characterization.
3. In this condition and for a sample rate of 350ksps, 1 Conversion at gain 1x takes 6 clock cycles of the ADC clock.
4. All single-shot measurements are performed with V_{DDANA} > 3.0V (cf. ADC errata).
5. It is the buffered internal reference of 1.0V derived from the internal 1.1V bandgap reference.

Table 40-26. Differential Mode : FCLK_ADC = 2.1MHz (Device Variant A)

Symbol	Parameter	Conditions	Min.	Typ.	Max.	Units
ENOB	Effective Number Of Bits	With gain compensation	-	9.9	10.1	bits
TUE	Total Unadjusted Error	1x Gain	2.9	4.6	12.4	LSB
INL	Integral Non Linearity	1x Gain	1.4	2.2	6.5	LSB
DNL	Differential Non Linearity	1x Gain	+/-0.3	+/-0.5	+/-0.95	LSB

Downloaded from Arrow.com.

.....continued						
Symbol	**Parameter**	**Conditions**	**Min.**	**Typ.**	**Max.**	**Units**
GE	Gain Error	Ext. Ref 1x	-24	-2.5	24	mV
		$V_{REF}=V_{DDANA}/1.48$	-25	-1.5	25	mV
		VREF = INT1V	-13	-5	+13	mV
	Gain Accuracy(5)	Ext. Ref. 0.5x	+/-0.1	+/-0.2	+/-0.45	%
		Ext. Ref. 2x to 16x	+/-0.1	+/-0.2	+/-2	%
OE	Offset Error	Ext. Ref. 1x	-10	-2	10	mV
		$V_{REF}=V_{DDANA}/1.48$	-10	0.5	15	mV
		VREF = INT1V	-10	3	15	mV
SFDR	Spurious Free Dynamic Range	1x Gain	64.2	70	78.9	dB
SINAD	Signal-to-Noise and Distortion	F_{IN} = 40kHz	60.4	61.1	62.7	dB
SNR	Signal-to-Noise Ratio	A_{IN} = 95%FSR	63.4	64.4	66	dB
THD	Total Harmonic Distortion		-65.0	-64.0	-62.6	dB
	Noise RMS	T=25°C	0.6	1	2.5	mV

Table 40-27. Differential Mode : FCLK_ADC = 2.1MHz (Device Variant B and D)

Symbol	Parameter	Conditions	Min.	Typ.	Max.	Units
ENOB	Effective Number Of Bits	With gain compensation	-	10.5	10.8	bits
TUE	Total Unadjusted Error	1x Gain	1.5	2.9	14	LSB
INL	Integral Non Linearity	1x Gain	0.9	1.3	4	LSB
DNL	Differential Non Linearity	1x Gain	+/-0.3	+/-0.5	+/-0.95	LSB
GE	Gain Error	Ext. Ref 1x	-15	-2.4	15	mV
		$V_{REF}=V_{DDANA}/1.48$	-56	-14	56	mV
		VREF = INT1V	-36	-7	36	mV
	Gain Accuracy(5)	Ext. Ref. 0.5x	-	+/-0.1	+/-0.7	%
		Ext. Ref. 2x to 16x	-	+/-0.04	+/-0.5	%
OE	Offset Error	Ext. Ref. 1x	-8	1.7	8	mV
		$V_{REF}=V_{DDANA}/1.48$	-8	1.6	9	mV
		VREF = INT1V	-6	1.8	8	mV
SFDR	Spurious Free Dynamic Range	1x Gain	63.7	69.5	71.5	dB
SINAD	Signal-to-Noise and Distortion	F_{IN} = 40kHz	56.8	63.7	65.6	dB
SNR	Signal-to-Noise Ratio	A_{IN} = 95%FSR	58.8	64.6	66.6	dB
THD	Total Harmonic Distortion		-71.5	-69.5	-65.6	dB
	Noise RMS	T=25°C	-	1	2.5	mV

Downloaded from Arrow.com.

Notes:

1. Maximum numbers are based on characterization and not tested in production, and valid for 5% to 95% of the input voltage range.
2. Dynamic parameter numbers are based on characterization and not tested in production.
3. Respect the input common mode voltage through the following equations (where VCM_IN is the Input channel common mode voltage):
   - i. If |VIN| > VREF/4
     - VCM_IN < 0.95*VDDANA + VREF/4 – 0.75V
     - VCM_IN > VREF/4 -0.05*VDDANA -0.1V
   - ii. If |VIN| < VREF/4
     - VCM_IN < 1.2*VDDANA - 0.75V
     - VCM_IN > 0.2*VDDANA - 0.1V
4. The ADC channels on pins PA08, PA09, PA10, and PA11 are powered from the V_{DDIO} power supply. The ADC performance of these pins will not be the same as all the other ADC channels on pins powered from the V_{DDANA} power supply.
5. The gain accuracy represents the gain error expressed in percent. Gain accuracy (%) = (Gain Error in V x 100) / (2*V_{REF}/GAIN).

Table 40-28. Single Ended Mode FCLK_ADC = 2.1MHz (Device Variant A)

Symbol	Parameter	Conditions	Min.	Typ.	Max.	Units
ENOB	Effective Number of Bits	With gain compensation	-	9.5	9.8	Bits
TUE	Total Unadjusted Error	1x gain	-	8.4	14.7	LSB
INL	Integral Non-Linearity	1x gain	1.6	2.6	7.5	LSB
DNL	Differential Non-Linearity	1x gain	+/-0.5	+/-0.6	+/-0.95	LSB
GE	Gain Error	Ext. Ref. 1x	-10	0.7	10	mV
	Gain Accuracy(4)	Ext. Ref. 0.5x	+/-0.1	+/-0.3	+/-0.4	%
		Ext. Ref. 2x to 16X	+/-0.01	+/-0.1	+/-0,65	%
OE	Offset Error	Ext. Ref. 1x	-17	0.2	1	mV
SFDR	Spurious Free Dynamic Range	1x Gain	63	65	66.5	dB
SINAD	Signal-to-Noise and Distortion	F_{IN} = 40kHz	50.7	59.5	61	dB
SNR	Signal-to-Noise Ratio	A_{IN} = 95%FSR	57.6	60	64	dB
THD	Total Harmonic Distortion		-64.4	-63	-57.9	dB
-	Noise RMS	T = 25°C	-	1	-	mV

Table 40-29. Single Ended Mode FCLK_ADC = 2.1MHz (Device Variant B and D)

Symbol	Parameter	Conditions	Min.	Typ.	Max.	Units
ENOB	Effective Number of Bits	With gain compensation	-	9.5	10.1	Bits
TUE	Total Unadjusted Error	1x gain	-	7.8	40	LSB
INL	Integral Non-Linearity	1x gain	1.4	2.6	6	LSB
DNL	Differential Non-Linearity	1x gain	+/-0.6	+/-0.7	+/-0.95	LSB
GE	Gain Error	Ext. Ref. 1x	-6.6	0.6	6.6	mV
	Gain Accuracy(4)	Ext. Ref. 0.5x	+/-0.1	+/-0.37	+/-0.55	%
		Ext. Ref. 2x to 16X	+/-0.01	+/-0.1	+/-0.3	%

Downloaded from Arrow.com.

.....continued						
Symbol	**Parameter**	**Conditions**	**Min.**	**Typ.**	**Max.**	**Units**
OE	Offset Error	Ext. Ref. 1x	-5	3.2	12	mV
SFDR	Spurious Free Dynamic Range	1x Gain F_{IN} = 40kHz A_{IN} = 95%FSR	61.7	66.6	66.6	dB
SINAD	Signal-to-Noise and Distortion		53.9	58.8	60.7	dB
SNR	Signal-to-Noise Ratio		52.9	59.7	62.7	dB
THD	Total Harmonic Distortion		-67.6	-66.6	-63.7	dB
-	Noise RMS	T = 25°C	-	1	6	mV

Notes:

1. Maximum numbers are based on characterization and not tested in production, and for 5% to 95% of the input voltage range.
2. Respect the input common mode voltage through the following equations (where V_{CM_IN} is the Input channel common mode voltage) for all V_{IN}:
   - VCM_IN < 0.7*VDDANA + VREF/4 – 0.75V
   - VCM_IN > VREF/4 – 0.3*VDDANA - 0.1V
3. The ADC channels on pins PA08, PA09, PA10, and PA11 are powered from the V_{DDIO} power supply. The ADC performance of these pins will not be the same as all the other ADC channels on pins powered from the V_{DDANA} power supply.
4. The gain accuracy represents the gain error expressed in percent. Gain accuracy (%) = (Gain Error in V x 100) / (V_{REF}/GAIN).

40.9.4 Digital to Analog Converter (DAC) Characteristics

Table 40-30. Operating Conditions(1)

Symbol	Parameters	Conditions	Min.	Typ.	Max.	Unit
V_{DDANA}	Analog supply voltage	-	2.7	-	3.63	V
A_{VREF}	External reference voltage	-	1	-	V_{DDANA}-0.6	V
	INT1V(3)	-	-	1	-	V
	VDDANA	-	-	V_{DDANA}	-	V
	Linear output voltage range	-	0.05	-	V_{DDANA}-0.05	V
	Minimum resistive load	-	5	-	-	kW
	Maximum capacitance load	-	-	-	100	pF
I_{DD}	DC supply current(2)	Voltage pump disabled	-	160	290	µA

Notes:

1. These values are based on specifications otherwise noted.
2. These values are based on characterization. These values are not covered by test limits in production.
3. It is the buffered internal reference of 1.0V derived from the internal 1.1V bandgap reference.

Table 40-31. Clock and Timing (1)

Parameter	Conditions		Min.	Typ.	Max.	Units
Conversion rate	C_{LOAD}=100pF	Normal mode	-	-	350	ksps
	R_{LOAD} > 5kΩ	For Δ_{DATA}=+/-1	-	-	1000	

Downloaded from Arrow.com.

.....continued					
Parameter	**Conditions**	**Min.**	**Typ.**	**Max.**	**Units**
Startup time	V_{DDNA} > 2.6V	-	-	2.85	µs
	V_{DDNA} < 2.6V	-	-	10	µs

Note:

1. These values are based on simulation. These values are not covered by test limits in production or characterization.

Table 40-32. Accuracy Characteristics(1) (Device Variant A)

Symbol	Parameter	Conditions		Min.	Typ.	Max.	Units
RES	Input resolution	-	-	-	-	10	Bits
INL	Integral non-linearity	V_{REF} = Ext 1.0V	VDD = 2.7V	-	1.2	1.5	LSB
			VDD = 3.6V	-	1.2	1.5	
		V_{REF} = V_{DDANA}	VDD = 2.7V	-	1.4	1.5	
			VDD = 3.6V	-	1.4	1.5	
		V_{REF} = INT1V	VDD = 2.7V	-	1.2	2	
			VDD = 3.6V	-	1.2	2	
DNL	Differential non-linearity	V_{REF} = Ext 1.0V	VDD = 2.7V	-	+/-1.2	+/-1.6	LSB
			VDD = 3.6V	-	+/-1.1	+/-1.5	
		V_{REF} = V_{DDANA}	VDD = 2.7V	-	+-1.3	+/-1.9	
			VDD = 3.6V	-	+/-1.1	+/-1.6	
		V_{REF} = INT1V	VDD = 2.7V	-	+/-1.4	+/-3	
			VDD = 3.6V	-	+/-1,5	+/-3	
GE	Gain error	Ext. V_{REF}	-	-	+/-5	+/-28	mV
OE	Offset error	Ext. V_{REF}	-	-	+/-3	+/-14	mV

Table 40-33. Accuracy Characteristics(1) (Device Variant B and D)

Symbol	Parameter	Conditions		Min.	Typ.	Max.	Units
RES	Input resolution	-	-	-	-	10	Bits

Downloaded from Arrow.com.

.....continued							
Symbol	**Parameter**	**Conditions**		**Min.**	**Typ.**	**Max.**	**Units**
INL	Integral non-linearity	V_{REF} = Ext 1.0V	VDD = 2.7V	-	0.75	1.5	LSB
			VDD = 3.6V	-	0.65	1.5	
		V_{REF} = V_{DDANA}	VDD = 2.7V	-	0.85	1.5	
			VDD = 3.6V	-	0.8	1.5	
		V_{REF} = INT1V	VDD = 2.7V	-	0.8	2	
			VDD = 3.6V	-	0.8	3	
DNL	Differential non-linearity	V_{REF} = Ext 1.0V	VDD = 2.7V	-	+/-0.4	+/-1	
			VDD = 3.6V	-	+/-0.4	+/-1	
		V_{REF} = V_{DDANA}	VDD = 2.7V	-	+/-0.55	+/-1.0	
			VDD = 3.6V	-	+/-0.3	+/-0.75	
		V_{REF} = INT1V	VDD = 2.7V	-	+/-0.7	+/-3	
			VDD = 3.6V	-	+/-0.7	+/-3	
GE	Gain error	Ext. V_{REF}	-	-	+/-4	+/-16	mV
OE	Offset error	Ext. V_{REF}	-	-	+/-1	+/-13	mV

Note:

1. All values measured using a conversion rate of 35ksps.

40.9.5 Analog Comparator Characteristics

Table 40-34. Electrical and Timing (Device Variant A)

Symbol	Parameter	Conditions	Min.	Typ.	Max.	Units
	Positive input voltage range	-	0	-	V_{DDANA}	V
	Negative input voltage range	-	0	-	V_{DDANA}	
	Offset	Hysteresis = 0, Fast mode	-26	0	26	mV
		Hysteresis = 0, Low power mode	-43	0	43	mV
	Hysteresis	Hysteresis = 1, Fast mode	8	50	102	mV
		Hysteresis = 1, Low power mode	14	40	85	mV
	Propagation delay	Changes for V_{ACM}=V_{DDANA}/2 100mV overdrive, Fast mode	-	60	126	ns
		Changes for V_{ACM}=V_{DDANA}/2 100mV overdrive, Low power mode	-	225	402	ns
$t_{STARTUP}$	Startup time	Enable to ready delay Fast mode	-	1	2	µs
		Enable to ready delay Low power mode	-	12	20	µs
V_{SCALE}	INL(3)	-	-1.6	0.8	1.6	LSB

Downloaded from Arrow.com.

.....continued						
Symbol	Parameter	Conditions	Min.	Typ.	Max.	Units
	DNL(3)	-	-0.95	0.3	0.95	LSB
	Offset Error (1)(2)	-	-0.2	0.3	1.04	LSB
	Gain Error (1)(2)	-	-0.89	0.2	2	LSB

Table 40-35. Electrical and Timing (Device Variant B and D)

Symbol	Parameter	Conditions	Min.	Typ.	Max.
	Positive input voltage range	-	0	-	V_{DDANA}
	Negative input voltage range	-	0	-	V_{DDANA}
	Offset	Hysteresis = 0, Fast mode	-26	0	26
		Hysteresis = 0, Low power mode	-28	0	28
	Hysteresis	Hysteresis = 1, Fast mode	8	50	102
		Hysteresis = 1, Low power mode	14	40	75
	Propagation delay	Changes for V_{ACM}=V_{DDANA}/2 100mV overdrive, Fast mode	-	90	180
		Changes for V_{ACM}=V_{DDANA}/2 100mV overdrive, Low power mode	-	282	534
$t_{STARTUP}$	Startup time	Enable to ready delay Fast mode	-	1	3
		Enable to ready delay Low power mode	-	14	23
V_{SCALE}	INL(3)	-	-1.6	0.75	1.6
	DNL(3)	-	-0.95	0.25	0.95
	Offset Error (1)(2)	-	-0.2	0.26	1.04
	Gain Error (1)(2)	-	-0.89	0.215	2

Notes:

1. According to the standard equation V(X)=VLSB*(X+1); VLSB=VDDANA/64
2. Data computed with the Best Fit method.
3. Data computed using histogram.

40.9.6 Bandgap and Internal 1.0V Reference Characteristics

Table 40-36. Bandgap and Internal 1.0V Reference Characteristics

Symbol	Parameter	Conditions	Min.	Typ.	Max.	Units
BANDGAP	Internal 1.1V Bandgap reference	After calibration at T= 25°C, over [-40°C, +125°C], Vdd 3.3V	1.06	1.1	1.12	V
		Over voltage at 25°C	1.07	1.1	1.12	V

Downloaded from Arrow.com.

.....continued						
Symbol	Parameter	Conditions	Min.	Typ.	Max.	Units
INT1V	Internal 1.0V reference voltage (1)	After calibration at T= 25°C, over [-40°C, +125°C], Vdd 3.3V	0.96	1.00	1.02	V
		Over voltage at 25°C	0.97	1.00	1.02	V

Note:
1. These values are simulation based and are not covered by production test limits.

40.10 NVM Characteristics

Table 40-37. Maximum Operating Frequency (Device Variant A)

VDD range	NVM Wait States	Maximum Operating Frequency	Units
2.7V to 3.63V	0	24	MHz
	1	40	

Table 40-38. Maximum Operating Frequency (Device Variant B and D)

VDD range	NVM Wait States	Maximum Operating Frequency	Units
2.7V to 3.63V	0	24	MHz
	1	48	

Note: With on this flash technology, a max number of 8 consecutive write is allowed per row. Once this number is reached, a row erase is mandatory.

Table 40-39. Flash Endurance and Data Retention (Device Variant A)

Symbol	Parameter	Conditions	Min.	Typ.	Max.	Units
Ret_{NVM25k}	Retention after up to 25k	Average ambient 55°C	10	50	-	Years
$Ret_{NVM2.5k}$	Retention after up to 2.5k	Average ambient 55°C	20	100	-	Years
Ret_{NVM100}	Retention after up to 100	Average ambient 55°C	25	>100	-	Years
Cyc_{NVM}	Cycling Endurance(1)	-40°C < Ta < 125°C	10K	-	-	Cycles

Table 40-40. Flash Endurance and Data Retention (Device Variant B and D)

Symbol	Parameter	Conditions	Min.	Typ.	Max.	Units
Ret_{NVM25k}	Retention after up to 25k	Average ambient 55°C	10	50	-	Years
$Ret_{NVM2.5k}$	Retention after up to 2.5k	Average ambient 55°C	20	100	-	Years
Ret_{NVM100}	Retention after up to 100	Average ambient 55°C	25	>100	-	Years
Cyc_{NVM}	Cycling Endurance(1)	-40°C < Ta < 125°C	25k	-	-	Cycles

Note:
1. An endurance cycle is a write and an erase operation.

Table 40-41. EEPROM Emulation(1) Endurance and Data Retention (Device Variant A)

Symbol	Parameter	Conditions	Min.	Typ.	Max.	Units
$Ret_{EEPROM100k}$	Retention after up to 100k	Average ambient 55°C	10	50	-	Years

Downloaded from Arrow.com.

.....continued						
Symbol	Parameter	Conditions	Min.	Typ.	Max.	Units
$Ret_{EEPROM10k}$	Retention after up to 10k	Average ambient 55°C	20	100	-	Years
Cyc_{EEPROM}	Cycling Endurance(2)	-40°C < Ta < 125°C	40K	-	-	Cycles

Table 40-42. EEPROM Emulation(1) Endurance and Data Retention (Device Variant B and D)

Symbol	Parameter	Conditions	Min.	Typ.	Max.	Units
$Ret_{EEPROM100k}$	Retention after up to 100k	Average ambient 55°C	10	50	-	Years
$Ret_{EEPROM10k}$	Retention after up to 10k	Average ambient 55°C	20	100	-	Years
Cyc_{EEPROM}	Cycling Endurance(2)	-40°C < Ta < 125°C	100k	-	-	Cycles

Notes:

1. The EEPROM emulation is a software emulation described in the Application Note AT03265: SAM D10/D11/D20/D21/R/L/C EEPROM Emulator (EEPROM) Service.
2. An endurance cycle is a write and an erase operation.

Table 40-43. NVM Characteristics

Symbol	Parameter	Conditions	Min.	Typ.	Max.	Units
t_{FPP}	Page programming time	-	-	-	2.5	ms
t_{FRE}	Row erase time	-	-	-	6	ms
t_{FCE}	DSU chip erase time (CHIP_ERASE)	-	-	-	240	ms

40.11 Oscillator Characteristics

40.11.1 Crystal Oscillator (XOSC) Characteristics

Table 40-44. Digital Clock Characteristics

Symbol	Parameter	Conditions	Min.	Typ.	Max	Units
f_{CPXIN}	XIN clock frequency	digital mode	-	-	32	MHz

Crystal Oscillator Characteristics

The following table describes the characteristics for the oscillator when a crystal is connected between XIN and XOUT. The user must choose a crystal oscillator where the crystal load capacitance CL is within the range given in the table. The exact value of CL can be found in the crystal data sheet. The capacitance of the external capacitors (CLEXT) can then be computed as follows:

Load Capacitance Equation

$C_{LOAD} = ([C_{XIN} + C_{LEXT}] * [C_{XOUT} + C_{LEXT}]) / ([C_{XIN} + C_{LEXT} + C_{LEXT} + C_{XOUT}]) + C_{STRAY}$

Where:

C_{LOAD} = Crystal Mfg. C_{LOAD} specification

C_{XIN} = XOSC XIN pin data sheet specification

C_{XOUT} = XOSC XOUT pin data sheet specification

C_{LEXT} = Required external crystal load capacitor

C_{STRAY} (Osc PCB capacitance) = 1.5 pf per 12.5 mm (0.5 inches) (TRACE W = 0.175 mm, H = 36 µm, T = 113 µm)

Downloaded from Arrow.com.

Table 40-45. Crystal Oscillator Characteristics

Symbol	Parameter	Conditions	Min.	Typ.	Max.	Units
f_{OUT}	Crystal oscillator frequency	-	0.4	-	32	MHz
ESR	Crystal Equivalent Series Resistance - SF = 3	f = 0.455 MHz, C_L = 100pF, XOSC.GAIN = 0	-	-	5.6K	Ω
		f = 2MHz, C_L=20 pF XOSC.GAIN=0	-	-	330	
		f = 4MHz, C_L=20 pF XOSC.GAIN=1	-	-	240	
		f = 8MHz, C_L=20 pF XOSC.GAIN=2	-	-	105	
		f = 16MHz, C_L=20 pF XOSC.GAIN=3	-	-	60	
		f = 32MHz, C_L=18 pF XOSC,GAIN=4	-	-	55	
C_{XIN}	Parasitic load capacitor	-	-	5.9	-	pF
C_{XOUT}		-	-	3.2	-	pF
I_{XOSC}	Current consumption	f = 2MHz, C_L=20 pF XOSC.GAIN=0, AGC off	-	65	240	uA
		f = 2MHz, C_L=20 pF XOSC.GAIN=0, AGC on	-	52	240	
		f = 4MHz, C_L=20 pF XOSC.GAIN=1, AGC off	-	117	309	
		f = 4MHz, C_L=20 pF XOSC.GAIN=1, AGC on	-	74	281	
		f = 8MHz, C_L=20 pF XOSC.GAIN=2, AGC off	-	226	435	
		f = 8MHz, C_L=20 pF XOSC.GAIN=2, AGC on	-	128	356	
		f = 16MHz, C_L=20 pF XOSC.GAIN=3, AGC off	-	502	748	
		f = 16MHz, C_L=20 pF XOSC.GAIN=3, AGC on	-	307	627	
		f = 32MHz, C_L=18 pF XOSC.GAIN=4, AGC off	-	1622	2344	
		f = 32MHz, C_L=18 pF XOSC.GAIN=4, AGC on	-	615	1422	
t_{START}	Startup time	f = 2MHz, C_L=20 pF XOSC,GAIN=0, ESR=600 Ohms	-	15.6K	51.0K	Cycles
		f = 4MHz, C_L=20 pF XOSC,GAIN=1, ESR=100 Ohms	-	6.3K	20.1K	
		f = 8MHz, C_L=20 pF XOSC,GAIN=2, ESR=35 Ohms	-	6.2K	20.3K	
		f = 16MHz, C_L=20 pF XOSC,GAIN=3, ESR=25 Ohms	-	7.7K	21.2K	
		f = 32MHz, C_L=18 pF XOSC,GAIN=4, ESR=40 Ohms	-	6.0K	14.2K	

Downloaded from Arrow.com.

Figure 40-2. Oscillator Connection

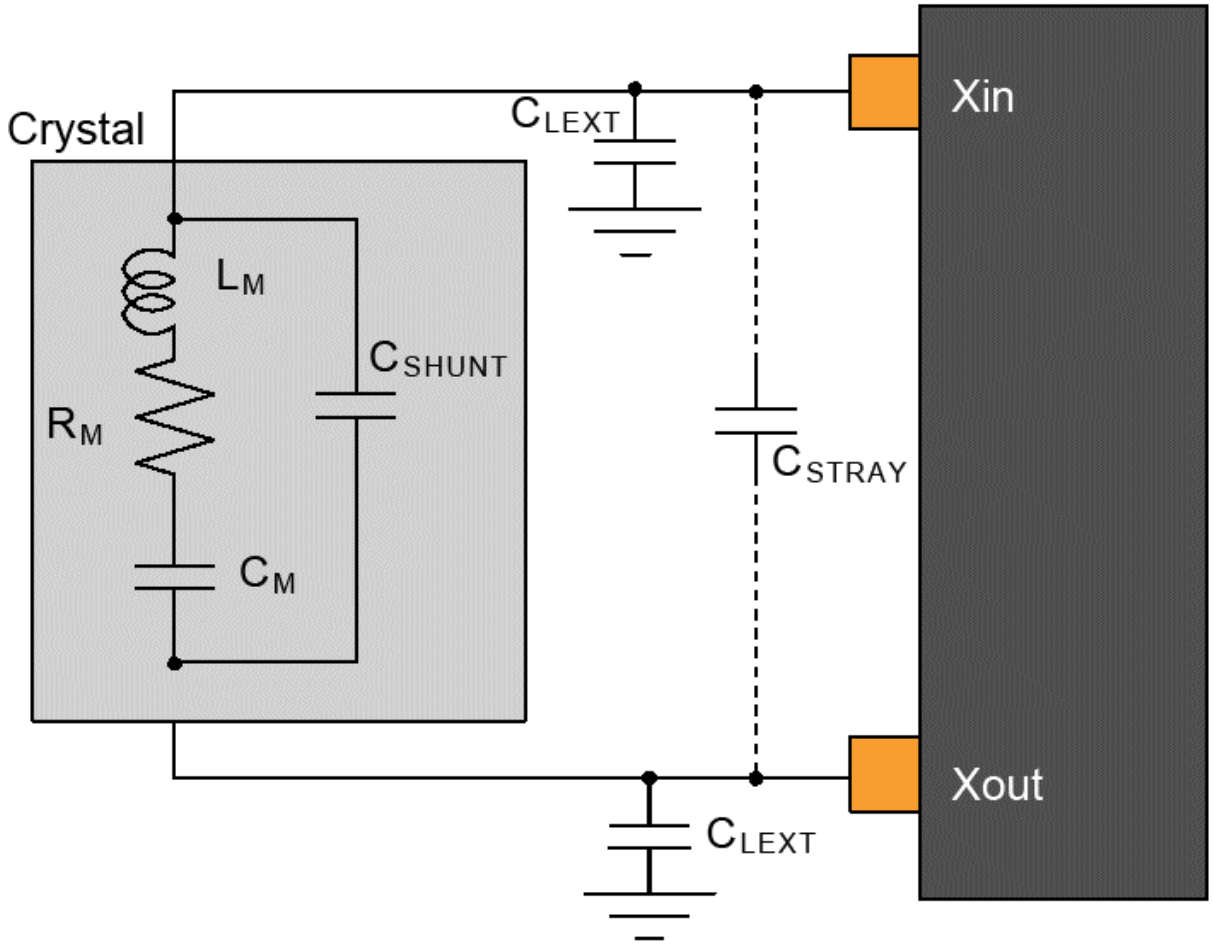

40.11.2 External 32 kHz Crystal Oscillator (XOSC32K) Characteristics

Digital Clock Characteristics

The following table describes the characteristics for the oscillator when a digital clock is applied on XIN32 pin.

Table 40-46. Digital Clock Characteristics

Symbol	Parameter	Conditions	Min.	Typ.	Max	Units
$f_{CPXIN32}$	XIN32 clock frequency	digital mode	-	32.768	-	kHz
-	XIN32 clock duty cycle	digital mode	-	50	-	%

Crystal Oscillator Characteristics

The figure, Oscillator Connection and the equation in Crystal Oscillator Characteristics also applies to the 32 kHz oscillator connection. The user must choose a crystal oscillator where the crystal load capacitance CL is within the range given in the table. The exact value of CL can be found in the crystal data sheet.

Table 40-47. 32 kHz Crystal Oscillator Electrical Characteristics (Device Variant A)

Symbol	Parameter	Conditions	Min.	Typ.	Max	Units
f_{OUT}	Crystal oscillator frequency	-	-	32768	-	Hz
$t_{STARTUP}$	Startup time	ESR_{XTAL} = 39.9 kΩ, C_L = 12.5 pF	-	28K	31K	cycles

Downloaded from Arrow.com.

.....continued						
Symbol	Parameter	Conditions	Min.	Typ.	Max	Units
C_L	Crystal load capacitance	-	-	-	12.5	pF
C_{SHUNT}	Crystal shunt capacitance	-	-	0.1	-	pF
C_{XIN32}	Parasitic capacitor load	TQFP64/48/32 packages	-	3.1	-	pF
C_{XOUT32}	Parasitic capacitor load		-	3.3	-	pF
$I_{XOSC32K}$	Current consumption	-	-	1.2	2.5	µA
ESR	Crystal equivalent series resistance f=32.768kHz Safety Factor = 3	C_L=12.5pF	-	-	141	kΩ

Table 40-48. 32 kHz Crystal Oscillator Electrical Characteristics (Device Variant B and D)

Symbol	Parameter	Conditions	Min.	Typ.	Max	Units
f_{OUT}	Crystal oscillator frequency	-	-	32768	-	Hz
$t_{STARTUP}$	Startup time	ESR_{XTAL} = 39.9 kW, C_L = 12.5 pF	-	28K	31K	cycles
C_L	Crystal load capacitance	-	-	-	12.5	pF
C_{SHUNT}	Crystal shunt capacitance	-	-	0.1	-	-
C_{XIN32}	Parasitic capacitor load	TQFP64/48/32 packages	-	3.2	-	-
C_{XOUT32}	Parasitic capacitor load		-	3.7	-	-
$I_{XOSC32K}$	Current consumption	-	-	1.2	2.2	µA
ESR	Crystal equivalent series resistance f=32.768kHz Safety Factor = 3	C_L=12.5pF	-	-	100	kΩ

40.11.3 Digital Frequency Locked Loop (DFLL48M) Characteristics

Table 40-49. DFLL48M Characteristics - Open Loop Mode (Device Variant A)

Symbol	Parameter	Conditions	Min.	Typ.	Max.	Units
f_{OUT}	Output frequency	DFLLVAL.COARSE = DFLL48M COARSE CAL DFLLVAL.FINE = 512 over [-40°, +125°]C, over [2.7, 3.6]V	45	48	49	MHz
f_{OUT}	Output frequency	DFLLVAL.COARSE = DFLL48M COARSE CAL DFLLVAL.FINE = 512 at 25°C, over [2.7, 3.6]V	46.5	48	49	MHz
I_{DFLL}	Power consumption on V_{DDIN}	DFLLVAL.COARSE = DFLL48M COARSE CAL DFLLVAL.FINE = 512	-	403	457	µA
$t_{STARTUP}$	Startup time	DFLLVAL.COARSE = DFLL48M COARSE CAL DFLLVAL.FINE = 512 f_{OUT} within 90 % of final value	-	8	12	µs

Downloaded from Arrow.com.

Table 40-50. DFLL48M Characteristics - Open Loop Mode (Device Variant B and D)

Symbol	Parameter	Conditions	Min.	Typ.	Max.	Units
f_{OUT}	Output frequency	DFLLVAL.COARSE = DFLL48M COARSE CAL DFLLVAL.FINE = 512 over [-10°, +125°]C, over [2.7, 3.6]V	44.75	48	49	MHz
f_{OUT}	Output frequency	DFLLVAL.COARSE = DFLL48M COARSE CAL DFLLVAL.FINE = 512 over [-40°, +125°]C, over [2.7, 3.6]V	43.5	48	49	MHz
f_{OUT}	Output frequency	DFLLVAL.COARSE = DFLL48M COARSE CAL DFLLVAL.FINE = 512 at 25°C, over [2.7, 3.6]V	45.5	48	49	MHz
I_{DFLL}	Power consumption on V_{DDIN}	DFLLVAL.COARSE = DFLL48M COARSE CAL DFLLVAL.FINE = 512	-	403	457	µA
$t_{STARTUP}$	Startup time	DFLLVAL.COARSE = DFLL48M COARSE CAL DFLLVAL.FINE = 512 f_{OUT} within 90 % of final value	-	8	12	µs

Table 40-51. DFLL48M Characteristics - Close Loop Mode (Device Variant A)

Symbol	Parameter	Conditions	Min.	Typ.	Max.	Units
f_{OUT}	Average Output frequency	f_{REF} = XTAL, 32 .768kHz, 100ppm DFLLMUL = 1464	47.76	48	48.24	MHz
f_{REF}	Reference frequency	-	0.732	32.768	33	kHz
Jitter	Cycle to Cycle jitter	f_{REF} = XTAL, 32 .768kHz, 100ppm DFLLMUL = 1464	-	-	0.42	ns
I_{DFLL}	Power consumption on V_{DDIN}	f_{REF} = XTAL, 32 .768kHz, 100ppm	-	403	457	µA
t_{LOCK}	Lock time	f_{REF} = XTAL, 32 .768kHz, 100ppm DFLLMUL = 1464 DFLLVAL.COARSE = DFLL48M COARSE CAL DFLLVAL.FINE = 512 DFLLCTRL.BPLCKC = 1 DFLLCTRL.QLDIS = 0 DFLLCTRL.CCDIS = 1 DFLLMUL.FSTEP = 10	-	350	1500	µs

Downloaded from Arrow.com.

Table 40-52. DFLL48M Characteristics - Close Loop Mode (Device Variant B and D)

Symbol	Parameter	Conditions	Min.	Typ.	Max.	Units
f_{OUT}	Average Output frequency	f_{REF} = XTAL, 32 .768kHz, 100ppm DFLLMUL = 1464	47.76	48	48.24	MHz
f_{REF}	Reference frequency	-	0.732	32.768	33	kHz
Jitter	Cycle to Cycle jitter	f_{REF} = XTAL, 32 .768kHz, 100ppm DFLLMUL = 1464	-	-	0.42	ns
I_{DFLL}	Power consumption on V_{DDIN}	f_{REF} = XTAL, 32 .768kHz, 100ppm	-	403	457	µA
t_{LOCK}	Lock time	f_{REF} = XTAL, 32 .768kHz, 100ppm DFLLMUL = 1464 DFLLVAL.COARSE = DFLL48M COARSE CAL DFLLVAL.FINE = 512 DFLLCTRL.BPLCKC = 1 DFLLCTRL.QLDIS = 0 DFLLCTRL.CCDIS = 1 DFLLMUL.FSTEP = 10	-	350	1500	µs

Note: All parts are tested in production to be able to use the DFLL as main CPU clock whether in DFLL closed loop mode with an external OSC reference or the internal OSC8M.

40.11.4 32.768 kHz Internal Oscillator (OSC32K) Characteristics

Table 40-53. 32 kHz RC Oscillator Electrical Characteristics (Device Variant A)

Symbol	Parameter	Conditions	Min.	Typ.	Max	Units
f_{OUT}	Output frequency	Calibrated against a 32.768kHz reference at 25°C, over [-40, +125]C, over [2.7, 3.63]V	28.508	32.768	35.389	kHz
		Calibrated against a 32.768kHz reference at 25°C, at V_{DD}=3.3V	31.621	32.768	33.423	
		Calibrated against a 32.768kHz reference at 25°C, over [2.7, 3.63]V	31.457	32.768	34.079	
I_{OSC32K}	Current consumption	-	-	0.79	3.7	uA
$t_{STARTUP}$	Startup time	-	-	1	2	cycles
Duty	Duty Cycle	-	-	50	-	%

Downloaded from Arrow.com.

Table 40-54. 32 kHz RC Oscillator Electrical Characteristics (Device Variant B and D)

Symbol	Parameter	Conditions	Min.	Typ.	Max	Units
f_{OUT}	Output frequency	Calibrated against a 32.768kHz reference at 25°C, over [-40, +125]C, over [2.7, 3.63]V	26.214	32.768	39.321	kHz
		Calibrated against a 32.768kHz reference at 25°C, at V_{DD}=3.3V	32.113	32.768	33.423	kHz
		Calibrated against a 32.768kHz reference at 25°C, over [2.7, 3.63]V	31.457	32.768	34.079	kHz
I_{OSC32K}	Current consumption	-	-	0.67	5	uA
$t_{STARTUP}$	Startup time	-	-	1	2	cycles
Duty	Duty Cycle	-	-	50	-	%

40.11.5 Ultra Low Power Internal 32kHz RC Oscillator (OSCULP32K) Characteristics

Table 40-55. Ultra Low Power Internal 32 kHz RC Oscillator Electrical Characteristics

Symbol	Parameter	Conditions	Min.	Typ.	Max	Units
f_{OUT}	Output frequency	Calibrated against a 32.768kHz reference at 25°C, over [-40, +125]C, over [2.7, 3.63]V	24.248	32.768	40.96	kHz
-	-	Calibrated against a 32.768kHz reference at 25°C, at V_{DD}=3.3V	30.474	32.768	35.061	kHz
-	-	Calibrated against a 32.768kHz reference at 25°C, over [2.7, 3.63]V	30.146	32.768	35.389	kHz
Duty	Duty Cycle	-	-	50	-	%

Notes:

1. These values are based on simulation. These values are not covered by test limits in production or characterization.
2. This oscillator is always on.

40.11.6 8MHz RC Oscillator (OSC8M) Characteristics

Table 40-56. Internal RC Oscillator Electrical Characteristics (Device Variant A)

Symbol	Parameter	Conditions	Min.	Typ.	Max	Units
f_{OUT}	Output frequency	Calibrated against a 8MHz reference at 25°C, over [-10, +70]C, over [2.7, 3.6]V	7.84	8	8.16	MHz
		Calibrated against a 8MHz reference at 25°C, over [-10, +125]C, over [2.7, 3.6]V	7.8	8	8.2	
		Calibrated against a 8MHz reference at 25°C, over [-40, +125]C, over [2.7, 3.6]V	7.7	8	8.3	
		Calibrated against a 8MHz reference at 25°C, over [2.7, 3.6]V	7.88	8	8.12	

Downloaded from Arrow.com.

.....continued						
Symbol	Parameter	Conditions	Min.	Typ.	Max	Units
I_{OSC8M}	Current consumption	IDLE2 on OSC32K versus IDLE2 on calibrated OSC8M enabled at 8MHz (FRANGE=1, PRESC=0)	-	64	100	uA
$t_{STARTUP}$	Startup time	-	-	2.4	3.9	us
Duty	Duty Cycle	-	-	50	-	%

Table 40-57. Internal RC Oscillator Electrical Characteristics (Device Variant B and D)

Symbol	Parameter	Conditions	Min.	Typ.	Max	Units
f_{OUT}	Output frequency	Calibrated against a 8MHz reference at 25°C, over [-10, +70]C, over [2.7, 3.6]V	7.84	8	8.16	MHz
		Calibrated against a 8MHz reference at 25°C, over [-10, +125]C, over [2.7, 3.6]V	7.8	8	8.2	
		Calibrated against a 8MHz reference at 25°C, over [-40, +125]C, over [2.7, 3.6]V	7.66	8	8.34	
		Calibrated against a 8MHz reference at 25°C, over [2.7, 3.6]V	7.88	8	8.12	
I_{OSC8M}	Current consumption	IDLE2 on OSC32K versus IDLE2 on calibrated OSC8M enabled at 8MHz (FRANGE=1, PRESC=0)	-	64	96	uA
$t_{STARTUP}$	Startup time	-	-	2.4	3.9	us
Duty	Duty Cycle	-	-	50	-	%

40.11.7 Fractional Digital Phase Locked Loop (FDPLL96M) Characteristics

Table 40-58. FDPLL96M Characteristics(1) (Device Variant A)

Symbol	Parameter	Conditions	Min.	Typ.	Max.	Units
f_{IN}	Input frequency	-	32	-	2000	kHz
f_{OUT}	Output frequency	-	48	-	64	MHz
$I_{FDPLL96M}$	Current consumption	fIN= 32 kHz, fOUT= 48 MHz	-	500	700	µA
		fIN= 32 kHz, fOUT= 64 MHz	-	900	1200	
J_P	Period jitter peak	fIN= 32 kHz, fOUT= 48 MHz	-	1.5	4	%
		fIN= 32 kHz, fOUT= 64 MHz	-	2.8	7	
		fIN= 2 MHz, fOUT= 48 MHz	-	1.3	5	
		fIN= 2 MHz, fOUT= 64 MHz	-	3.3	8	
t_{LOCK}	Lock Time	After startup, time to get lock signal. fIN= 32 kHz, fOUT= 64 MHz	-	1.3	2	ms
		After startup, time to get lock signal fIN= 2MHz, fOUT= 64MHz	-	25	50	µs
Duty	Duty cycle	-	40	50	60	%

Downloaded from Arrow.com.

Table 40-59. FDPLL96M Characteristics(1) (Device Variant B and D)

Symbol	Parameter	Conditions	Min.	Typ.	Max.	Units
f_{IN}	Input frequency	-	32	-	2000	kHz
f_{OUT}	Output frequency	-	48	-	96	MHz
$I_{FDPLL96M}$	Current consumption	fIN= 32 kHz, fOUT= 48 MHz	-	500	740	µA
		fIN= 32 kHz, fOUT= 96 MHz	-	900	1262	
J_P	Period jitter peak	fIN= 32 kHz, fOUT= 48 MHz	-	2.1	4	%
		fIN= 32 kHz, fOUT= 96 MHz	-	3.8	11	
		fIN= 2 MHz, fOUT= 48 MHz	-	2.2	4	
		fIN= 2 MHz, fOUT= 96 MHz	-	5	12	
t_{LOCK}	Lock Time	After startup, time to get lock signal. fIN= 32 kHz, fOUT= 96 MHz	-	1.2	2	ms
		fIN= 2 MHz, fOUT= 96 MHz	-	25	50	µs
Duty	Duty cycle	-	40	50	60	%

Note:

1. All values have been characterized with FILTSEL[1/0] as default value.

40.12 PTC Characteristics

The values given in the Power Consumption table below are measured values of power consumption, which are valid under the following conditions:

Operating conditions

V_{DD} = 3.3 V

Clocks

OSC8M used as main clock source, running undivided at 8 MHz.

CPU is running on Flash with '0' wait states, at 8 MHz.

PTC running at 4 MHz.

PTC configuration

Mutual-Capacitance mode.

One-touch channel.

System configuration

Standby Sleep mode enabled.

RTC running on OSCULP32K: Used to define the PTC scan rate through the event system.

Drift Calibration disabled: No interrupts, PTC scans are performed in Standby mode.

Drift Calibration enabled: RTC interrupts (wake-up) the CPU to perform PTC scans. PTC drift calibration is performed every 1.5 sec.

Downloaded from Arrow.com.

Table 40-60. Power Consumption [1][2] (Variant A)

Symbol	Parameters	Drift Calibration	PTC scan rate (msec)	Oversamples	Ta	Typ.	Max.	Units
I_{DD}[2]	Current Consumption	Disabled	10	4	Max. 125°C	72	1151	µA
				16	Typ. 25°C	84	1167	
			50	4		65	1148	
				16		68	1154	
			100	4		64	1148	
				16		65	1151	
			200	4		64	1151	
				16		64	1150	
		Enabled	10	4		77	1152	
				16		88	1181	
			50	4		67	1156	
				16		70	1160	
			100	4		66	1154	
				16		67	1158	
			200	4		65	1155	
				16		66	1157	

Downloaded from Arrow.com.

Table 40-61. Power Consumption [1][2] (Variant B and D)

Symbol	Parameters	Drift Calibration	PTC scan rate (msec)	Oversamples	Ta	Typ.	Max.	Units
I_{DD}[2]	Current Consumption	Disabled	10	4	Max. 125°C	66	791	µA
				16	Typ. 25°C	75	803	
			50	4		61	787	
				16		63	791	
			100	4		61	788	
				16		62	790	
			200	4		60	788	
				16		61	789	
		Enabled	10	4		71	802	
				16		80	813	
			50	4		63	792	
				16		65	795	
			100	4		62	791	
				16		63	793	
			200	4		62	790	
				16		63	791	

Notes:

1. These are based on characterization.
2. On this table, the LDO voltage regulator is enabled in Standby mode (SYSCTRL.VREG.RUNSTDBY = 1).

Downloaded from Arrow.com.

41. SAM DA1 Electrical Characteristics

41.1 Disclaimer

All typical values are measured at T = 25°C unless otherwise specified. All minimum and maximum values are valid across operating temperature and voltage unless otherwise specified.

41.2 Thermal Considerations

41.2.1 Thermal Resistance Data

The following Table summarizes the thermal resistance data depending on the package.

Table 41-1. Thermal Resistance Data

Package Type	θ_{JA}	θ_{JC}
32-pin VQFN	40.9°C/W	15.2°C/W
48-pin VQFN	32.0°C/W	10.9°C/W
64-pin VQFN (TMB)	32.5°C/W	10.7°C/W
64-lead VQFN (5LX)	23.9°C/W	8.9°C/W
32-pin TQFP	64.7°C/W	23.1°C/W
48-pin TQFP	63.6°C/W	12.2°C/W
64-pin TQFP	60.9°C/W	12.2°C/W

41.2.2 Junction Temperature

The average chip-junction temperature, T_J, in °C can be obtained from the following:

1. $T_J = T_A + (P_D \times \theta_{JA})$
2. $T_J = T_A + (P_D \times (\theta_{HEATSINK} + \theta_{JC}))$

where:

- θ_{JA} = Package thermal resistance, Junction-to-ambient (°C/W), see Thermal Resistance Data
- θ_{JC} = Package thermal resistance, Junction-to-case thermal resistance (°C/W), see Thermal Resistance Data
- $\theta_{HEATSINK}$ = Thermal resistance (°C/W) specification of the external cooling device
- P_D = Device power consumption (W)
- T_A = Ambient temperature (°C)

From the first equation, the user can derive the estimated lifetime of the chip and decide if a cooling device is necessary or not. If a cooling device has to be fitted on the chip, the second equation should be used to compute the resulting average chip-junction temperature T_J in °C.

41.3 Absolute Maximum Ratings

Stresses beyond those listed in this section may cause permanent damage to the device. This is a stress rating only and functional operation of the device at these or other conditions beyond those indicated in the operational sections of this specification is not implied. Exposure to absolute maximum rating conditions for extended periods may affect device reliability.

Downloaded from Arrow.com.

Table 41-2. Absolute Maximum Ratings

Symbol	Description	Min.	Max.	Units
V_{DD}	Power supply voltage	0	3.8	V
I_{VDD}	Current into a V_{DD} pin	-	92(1)	mA
I_{GND}	Current out of a GND pin	-	130(1)	mA
V_{PIN}	Pin voltage with respect to GND and V_{DD}	GND-0.6V	V_{DD}+0.6V	V
$T_{storage}$	Storage temperature	-60	150	°C

1. Maximum source current is 46mA and maximum sink current is 65mA per cluster. A cluster is a group of GPIOs as shown in the table below. Also note that each VDD/GND pair is connected to two clusters so current consumption through the pair will be a sum of the clusters source/sink currents.

⚠ CAUTION This device is sensitive to electrostatic discharges (ESD). Improper handling may lead to permanent performance degradation or malfunctioning.
Handle the device following best practice ESD protection rules: Be aware that the human body can accumulate charges large enough to impair functionality or destroy the device.

⚠ CAUTION In debugger cold-plugging mode, NVM erase operations are not protected by the BOD33 and BOD12. NVM erase operation at supply voltages below specified minimum can cause corruption of NVM areas that are mandatory for correct device behavior.

Related Links
7.2.4 GPIO Clusters
7.2.4 GPIO Clusters

41.4 Supply Characteristics

The following characteristics are applicable to the operating temperature range: T_A = -40°C to 105°C, unless otherwise specified and are valid for a junction temperature up to T_J = 125°C. Refer to *Power Supply and Start-Up Considerations*.

Table 41-3. Supply Characteristics

Conditions	Symbol	Voltage		
		Min.	Max.	Unit
Full Voltage Range	V_{DDIO} V_{DDIN} V_{DDANA}	2.7	3.63	V

Table 41-4. Supply Rates

Conditions	Symbol	Fall Rate	Rise Rate	Unit
		Max.	Max.	
DC supply peripheral I/Os, internal regulator and analog supply voltage	V_{DDIO} , V_{DDIN} , V_{DDANA}	0.05	0.1	V/µs

Related Links
8. Power Supply and Start-Up Considerations

Downloaded from Arrow.com.

41.5 Maximum Clock Frequencies

Table 41-5. Maximum GCLK Generator Output Frequencies

Description	Conditions	Symbol	Max.	Unit
GCLK Generator Output Frequency	Undivided	$f_{GCLKGEN0}$ / f_{GCLK_MAIN} $f_{GCLKGEN1}$ $f_{GCLKGEN2}$	96	MHz
	Divided	$f_{GCLKGEN3}$ $f_{GCLKGEN4}$ $f_{GCLKGEN5}$	48	MHz

Table 41-6. Maximum Peripheral Clock Frequencies

Description	Symbol	Max.	Unit
CPU clock frequency	f_{CPU}	48	MHz
AHB clock frequency	f_{AHB}	48	MHz
APBA clock frequency	f_{APBA}	48	MHz
APBB clock frequency	f_{APBB}	48	MHz
APBC clock frequency	f_{APBC}	48	MHz
DFLL48M Reference clock frequency	$f_{GCLK_DFLL48M_REF}$	33	kHz
FDPLL96M Reference clock frequency	f_{GCLK_DPLL}	2	MHz
FDPLL96M 32k Reference clock frequency	$f_{GCLK_DPLL_32K}$	32	kHz
WDT input clock frequency	f_{GCLK_WDT}	48	MHz
RTC input clock frequency	f_{GCLK_RTC}	48	MHz
EIC input clock frequency	f_{GCLK_EIC}	48	MHz
USB input clock frequency	f_{GCLK_USB}	48	MHz
EVSYS channel 0 input clock frequency	$f_{GCLK_EVSYS_CHANNEL_0}$	48	MHz
EVSYS channel 1 input clock frequency	$f_{GCLK_EVSYS_CHANNEL_1}$	48	MHz
EVSYS channel 2 input clock frequency	$f_{GCLK_EVSYS_CHANNEL_2}$	48	MHz
EVSYS channel 3 input clock frequency	$f_{GCLK_EVSYS_CHANNEL_3}$	48	MHz
EVSYS channel 4 input clock frequency	$f_{GCLK_EVSYS_CHANNEL_4}$	48	MHz
EVSYS channel 5 input clock frequency	$f_{GCLK_EVSYS_CHANNEL_5}$	48	MHz
EVSYS channel 6 input clock frequency	$f_{GCLK_EVSYS_CHANNEL_6}$	48	MHz
EVSYS channel 7 input clock frequency	$f_{GCLK_EVSYS_CHANNEL_7}$	48	MHz
EVSYS channel 8 input clock frequency	$f_{GCLK_EVSYS_CHANNEL_8}$	48	MHz
EVSYS channel 9 input clock frequency	$f_{GCLK_EVSYS_CHANNEL_9}$	48	MHz
EVSYS channel 10 input clock frequency	$f_{GCLK_EVSYS_CHANNEL_10}$	48	MHz
EVSYS channel 11 input clock frequency	$f_{GCLK_EVSYS_CHANNEL_11}$	48	MHz
Common SERCOM slow input clock frequency	$f_{GCLK_SERCOMx_SLOW}$	48	MHz

Downloaded from Arrow.com.

.....continued

Description	Symbol	Max.	Unit
SERCOM0 input clock frequency	$f_{GCLK_SERCOM0_CORE}$	48	MHz
SERCOM1 input clock frequency	$f_{GCLK_SERCOM1_CORE}$	48	MHz
SERCOM2 input clock frequency	$f_{GCLK_SERCOM2_CORE}$	48	MHz
SERCOM3 input clock frequency	$f_{GCLK_SERCOM3_CORE}$	48	MHz
SERCOM4 input clock frequency	$f_{GCLK_SERCOM4_CORE}$	48	MHz
SERCOM5 input clock frequency	$f_{GCLK_SERCOM5_CORE}$	48	MHz
TCC0, TCC1 input clock frequency	$f_{GCLK_TCC0,\ GCLK_TCC1}$	96	MHz
TCC2,TC3 input clock frequency	$f_{GCLK_TCC2,\ GCLK_TC3}$	48	MHz
TC4, TC5 input clock frequency	$f_{GCLK_TC4,\ GCLK_TC5}$	96	MHz
TC6,TC7 input clock frequency	$f_{GCLK_TC6,\ GCLK_TC7}$	48	MHz
ADC input clock frequency	f_{GCLK_ADC}	48	MHz
AC digital input clock frequency	$f_{GCLK_AC_DIG}$	48	MHz
AC analog input clock frequency	$f_{GCLK_AC_ANA}$	64	kHz
DAC input clock frequency	f_{GCLK_DAC}	48	MHz
PTC input clock frequency	f_{GCLK_PTC}	48	MHz
I2S serial 0 input clock frequency	$f_{GCLK_I2S_0}$	13	MHz
I2S serial 1 input clock frequency	$f_{GCLK_I2S_1}$	13	MHz

41.6 Power Consumption

The values in this section are measured values of power consumption under the following conditions, except where noted:

- Operating conditions
  - V_{VDDIN} = 3.3 V
  - V_{VDDIN} = 2.7V, CPU is running on Flash with 1 wait state
- Wake up time from sleep mode is measured from the edge of the wakeup signal to the execution of the first instruction fetched in flash.
- Oscillators
  - XOSC (crystal oscillator) stopped
  - XOSC32K (32 kHz crystal oscillator) running with external 32kHz crystal
  - DFLL48M using XOSC32K as reference and running at 48 MHz
- Clocks
  - DFLL48M used as main clock source, except otherwise specified
  - CPU, AHB clocks undivided
  - APBA clock divided by 4
  - APBB and APBC bridges off
- The following AHB module clocks are running: NVMCTRL, APBA bridge
  - All other AHB clocks stopped
- The following peripheral clocks running: PM, SYSCTRL, RTC
  - All other peripheral clocks stopped
- I/Os are inactive with internal pull-up

Downloaded from Arrow.com.

- CPU is running on flash with 1 wait states
- Cache enabled
- BOD33 disabled

Table 41-7. Current Consumption

Mode	Conditions	T_A	V_{CC}	Typ.	Max.	Unit
ACTIVE	CPU running a While(1) algorithm	25°C	3.3V	3.32	3.63	mA
		105°C	3.3V	3.57	3.98	
	CPU running a While(1) algorithm, with GCLKIN as reference	25°C	3.3V	64 × Freq + 110	70 × Freq + 131	µA (with freq in MHz)
		105°C	3.3V	65 × Freq + 342	65 × Freq + 764	
	CPU running a Fibonacci algorithm	25°C	3.3V	4.03	4.35	mA
		105°C	3.3V	4.29	4.76	
	CPU running a Fibonacci algorithm, with GCLKIN as reference	25°C	3.3V	79 × Freq + 110	85 × Freq + 133	µA (with freq in MHz)
		105°C	3.3V	80 × Freq + 346	81 × Freq + 771	
	CPU running a CoreMark algorithm	25°C	3.3V	5.08	5.63	mA
		105°C	3.3V	5.41	5.95	
	CPU running a CoreMark algorithm, with GCLKIN as reference	25°C	3.3V	101 × Freq + 113	110 × Freq + 132	µA (with freq in MHz)
		105°C	3.3V	103 × Freq + 347	104 × Freq + 748	
IDLE0	Default operating conditions	25°C	3.3V	2.24	2.41	mA
		105°C	3.3V	2.49	2.92	
IDLE1	Default operating conditions	25°C	3.3V	1.69	1.82	
		105°C	3.3V	1,91	2.33	
IDLE2	Default operating conditions	25°C	3.3V	1.23	1.32	
		105°C	3.3V	1.44	1.85	
STANDBY (Device Variant A / Die rev. E)	XOSC32K running RTC running at 1kHz	25°C	3.3V	4.2	12.8	µA
		70°C	3.3V	26.7	100.0	
		105°C	3.3V	146	627	
	XOSC32K and RTC stopped	25°C	3.3V	3.1	12.2	
		70°C	3.3V	25.6	100.0	
		105°C	3.3V	145	624	

Downloaded from Arrow.com.

.....continued

Mode	Conditions	T_A	V_{CC}	Typ.	Max.	Unit
STANDBY(1) (Device Variant B / Die rev. F)	XOSC32K running RTC running at 1kHz	25°C	3.3V	4.6	15.0	µA
		70°C	3.3V	23	96	
		105°C	3.3V	95.0	390.0	
	XOSC32K and RTC stopped	25°C	3.3V	3.4	14.0	
		70°C	3.3V	22	95	
		105°C	3.3V	94.0	388.0	
STANDBY(2) (Device Variant B / Die rev. F)	XOSC32K running RTC running at 1kHz	25°C	3.3V	61.0	72.0	µA
		70°C	3.3V	87	176	
		105°C	3.3V	174.0	452.0	
	XOSC32K and RTC stopped	25°C	3.3V	60.0	71.0	
		70°C	3.3V	86	175	
		105°C	3.3V	173.0	450.0	

1. Measurements done with SYSCTRL.VREG.RUNSTDBY=0 (low power configuration).
2. Measurements done with SYSCTRL.VREG.RUNSTDBY=1 (normal configuration).

Table 41-8. Wake-up Time(1)

Mode	T_A	Typ.	Unit
IDLE0	25°C	2.3	µs
IDLE1		21.1	
IDLE2		22.0	
STANDBY		29.6	
IDLE0	105°C	2.3	µs
IDLE1		22.9	
IDLE2		23.8	
STANDBY		29.8	

1. OSC8M used as main clock source, cache disabled.

Downloaded from Arrow.com.

Figure 41-1. Measurement Schematic

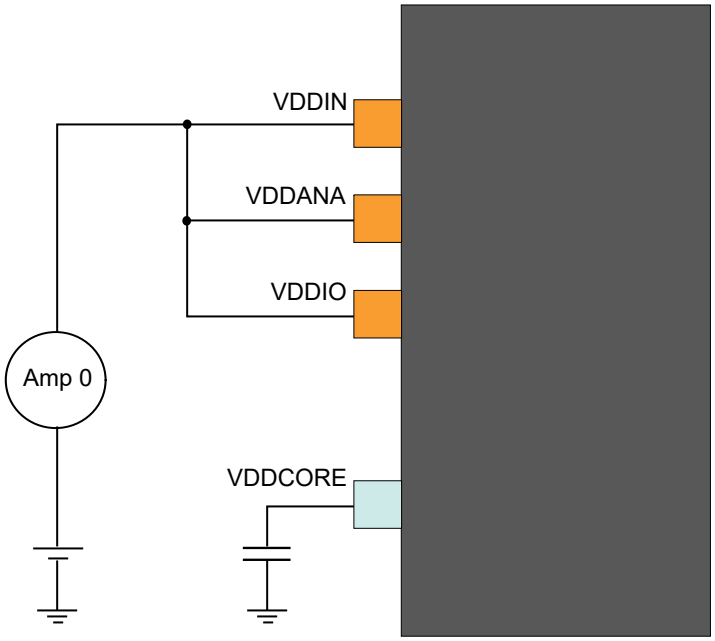

41.7 Peripheral Power Consumption

41.7.1 All peripheral except USB

Default conditions, except where noted:

- Operating conditions
  - V_{VDDIN} = 3.3 V
- Oscillators
  - XOSC (crystal oscillator) stopped
  - XOSC32K (32 kHz crystal oscillator) running with external 32kHz crystal
  - OSC8M at 8MHz
- Clocks
  - OSC8M used as main clock source
  - CPU, AHB and APBn clocks undivided
- The following AHB module clocks are running: NVMCTRL, HPB2 bridge, HPB1 bridge, HPB0 bridge
  - All other AHB clocks stopped
- The following peripheral clocks running: PM, SYSCTRL
  - All other peripheral clocks stopped
- I/Os are inactive with internal pull-up
- CPU in IDLE0 mode
- Cache enabled
- BOD33 disabled

In this default conditions, the power consumption $I_{default}$ is measured.

Operating mode for each peripheral in turn:

- Configure and enable the peripheral GCLK (When relevant, see conditions)
- Unmask the peripheral clock

Downloaded from Arrow.com.

- Enable the peripheral (when relevant)
- Set CPU in IDLE0 mode
- Measurement I_{periph}
- Wake-up CPU via EIC (async: level detection, filtering disabled)
- Disable the peripheral (when relevant)
- Mask the peripheral clock
- Disable the peripheral GCLK (when relevant, see conditions)

Each peripheral power consumption provided in table x.y is the value (I_{periph} - $I_{default}$), using the same measurement method as for global power consumption measurement

Table 41-9. Typical Peripheral Current Consumption

Peripheral	Conditions	Typ.	Unit
RTC	f_{GCLK_RTC} = 32kHz, 32bit counter mode	7.4	µA
WDT	f_{GCLK_WDT} = 32kHz, normal mode with EW	5.5	µA
AC	Both f_{GCLK} = 8MHz, Enable both COMP	31.3	µA
TCx(1)	f_{GCLK} = 8MHz, Enable + COUNTER in 8bit mode	50	µA
TCC2	f_{GCLK} = 8MHz, Enable + COUNTER	95.5	µA
TCC1	f_{GCLK} = 8MHz, Enable + COUNTER	167.5	µA
TCC0	f_{GCLK} = 8MHz, Enable + COUNTER	180.3	µA
SERCOMx.I2CM(2)	f_{GCLK} = 8MHz, Enable	69.7	µA
SERCOMx.I2CS	f_{GCLK} = 8MHz, Enable	29.2	µA
SERCOMx.SPI	f_{GCLK} = 8MHz, Enable	64.6	µA
SERCOMx.USART	f_{GCLK} = 8MHz, Enable	65.5	µA
I^2S(3)	$f_{GCLK_I2S_0}$ = 12.288MHz with source FDPLL with f_{FDPLL} = 49.152MHz	26.4	µA
DMAC(4)	RAM to RAM transfer	399.5	µA

1. All TCs from 4 to 7 share the same power consumption values.
2. All SERCOMs from 0 to 5 share the same power consumption values.
3. The value includes the power consumption of the FDPLL.
4. The value includes the power consumption of the R/W access to the RAM.

41.7.2 USB Peripheral Power Consumption

Default conditions, except where noted:

- Operating conditions
  - V_{VDDIN} = 3.3 V
- Oscillators
  - XOSC32K (32 kHz crystal oscillator) running with external 32kHz crystal in USB Host mode
- Clocks
  - USB Device mode: DFLL48M in USB recovery mode (Crystal less)
  - USB Host mode: DFLL48M in closed loop with XOSC32K (32 kHz crystal oscillator) running with external 32kHz crystal
  - CPU, AHB and APBn clocks undivided
- The following AHB module clocks are running: NVMCTRL, HPB2 bridge, HPB1 bridge, HPB0 bridge
  - All other AHB clocks stopped
- I/Os are inactive with internal pull-up

Downloaded from Arrow.com.

- CPU in IDLE0 mode
- Cache enabled
- BOD33 disabled

In this default conditions, the power consumption $I_{default}$ is measured.

Measurements do not include consumption of clock source (ex: DFLL48M or FDPLL96M) and CPU. However no CPU activity is required during all states (Suspend, IDLE, Data transfer).

Measurements have been done with an USB cable of 1.5m.

For USB Device mode, measurements include the maximum consumption (200µA) through pull-up resistor on the D+ line for USB attach. This value depends on USB Host characteristic.

Operating modes:

- Run the USB Device/Host states in regards of the Universal Serial Bus (USB) v2.0 standard.

USB power consumption is provided in the following tables.

Table 41-10. Typical USB Device Full Speed mode Current Consumption

USB Device state	Conditions	Typ.	Units
Suspend	GCLK_USB is off, using USB wakeup asynchronous interrupt. USB bus in suspend mode.	201	µA
Suspend	GCLK_USB is on. USB bus in suspend mode.	0.83	mA
IDLE	Start Of Frame is running. No packet transferred.	1.17	mA
Active OUT	Start Of Frame is running. Bulk OUT on 100% bandwidth.	2.17	mA
Active IN	Start Of Frame is running. Bulk IN on 100% bandwidth.	10.3	mA

Table 41-11. Typical USB Host Full Speed mode Current Consumption

USB Device state	Conditions	Typ.	Units
Wait connection	GCLK_USB is off, using USB wakeup asynchronous interrupt. USB bus not connected.	0.10	µA
Wait connection	GCLK_USB is on. USB bus not connected.	0.19	mA
Suspend	GCLK_USB is off, using USB wakeup asynchronous interrupt. USB bus in suspend mode.	201	µA
Suspend	GCLK_USB is on. USB bus in suspend mode.	0.83	mA
IDLE	Start Of Frame is running. No packet transferred.	1.17	mA
Active OUT	Start Of Frame is running. Bulk OUT on 100% bandwidth.	2.17	mA
Active IN	Start Of Frame is running. Bulk IN on 100% bandwidth.	10.3	mA

Downloaded from Arrow.com.

41.8 I/O Pin Characteristics

41.8.1 Normal I/O Pins

Table 41-12. Normal I/O Pins Characteristics

Parameter	Conditions	Symbol	Min.	Typ.	Max.	Unit
Pull-up - Pull-down resistance	All pins excepted PA24, PA25	R_{PULL}	20	40	60	kΩ
Input low-level voltage	V_{DD} = 2.7V-3.63V	V_{IL}	-	-	0.3 × V_{DD}	V
Input high-level voltage	V_{DD} = 2.7V-3.63V	V_{IH}	0.55 × V_{DD}	-	-	
Output low-level voltage	V_{DD} > 2.7V, I_{OL} maxI	V_{OL}	-	0.1 × V_{DD}	0.2 × V_{DD}	
Output high-level voltage	V_{DD} > 2.7V, I_{OH} maxII	V_{OH}	0.8 × V_{DD}	0.9 × V_{DD}	-	
Output low-level current	V_{DD} = 2.7V-3V, PORT.PINCFG.DRVSTR=0	I_{OL}	-	-	1	mA
	V_{DD} = 3V-3.63V, PORT.PINCFG.DRVSTR=0		-	-	2.5	
	V_{DD} = 2.7V-3V, PORT.PINCFG.DRVSTR=1		-	-	3	
	V_{DD} = 3V-3.63V, PORT.PINCFG.DRVSTR=1		-	-	10	
Output high-level current	V_{DD} = 2.7V-3V, PORT.PINCFG.DRVSTR=0	I_{OH}	-	-	0.70	
	V_{DD} = 3V-3.63V, PORT.PINCFG.DRVSTR=0		-	-	2	
	V_{DD} = 2.7V-3V, PORT.PINCFG.DRVSTR=1		-	-	2	
	V_{DD} = 3V-3.63V, PORT.PINCFG.DRVSTR=1		-	-	7	
Rise time(1)	PORT.PINCFG.DRVSTR = 0load = 5pF, V_{DD} = 3.3V	t_{RISE}	-	-	15	ns
	PORT.PINCFG.DRVSTR = 1load = 20pF, V_{DD} = 3.3V		-	-	15	
Fall time(1)	PORT.PINCFG.DRVSTR = 0load = 5pF, V_{DD} = 3.3V	t_{FALL}	-	-	15	ns
	PORT.PINCFG.DRVSTR = 1load = 20pF, V_{DD} = 3.3V		-	-	15	
Input leakage current	Pull-up resistors disabled	I_{LEAK}	–1	±0.015	1	µA

Note: These values are based on simulation. These values are not covered by test limits in production or characterization.

41.8.2 I²C Pins

Refer to the *SERCOM I²C Pins* section to get the list of I²C pins.

Downloaded from Arrow.com.

Table 41-13. I^2C Pins Characteristics in I^2C Configuration

Parameter	Condition	Symbol	Min.	Typ.	Max.	Unit
Input low-level voltage	V_{DD} = 2.7V-3.63V	V_{IL}	-	-	0.3 × V_{DD}	V
Input high-level voltage	V_{DD} = 2.7V-3.63V	V_{IH}	0.55 × V_{DD}	-	-	
Hysteresis of Schmitt trigger inputs		V_{HYS}	0.08 × V_{DD}	-	-	
Output low-level voltage	V_{DD} > 2.0V, I_{OL} = 3mA	V_{OL}	-	-	0.4	
	V_{DD} ≤ 2.0V , I_{OL} = 2mA		-	-	0.2 × V_{DD}	
Output low-level current	V_{OL} = 0.4V Standard, Fast and HS Modes	I_{OL}	3			mA
	V_{OL} = 0.4V Fast Mode +		20	-	-	
	V_{OL} = 0.6V		6	-	-	
SCL clock frequency		f_{SCL}	-	-	3.4	MHz

I^2C pins timing characteristics can be found in the *SERCOM in I^2C Mode Timing* section.

Table 41-14. I^2C Pins Characteristics in I/O Configuration

Parameter	Conditions	Symbol	Min.	Typ.	Max.	Unit
Pull-up - Pull-down resistance		R_{PULL}	20	40	60	kΩ
Input low-level voltage	V_{DD} = 2.7V-3.63V	V_{IL}	-	-	0.3 × V_{DD}	V
Input high-level voltage	V_{DD} = 2.7V-3.63V	V_{IH}	0.55 × V_{DD}	-	-	
Output low-level voltage	V_{DD} > 2.7V, IOL max	V_{OL}	-	0.1 × V_{DD}	0.2 × V_{DD}	
Output high-level voltage	V_{DD} > 2.7V, IOH max	V_{OH}	0.8*V_{DD}	0.9 × V_{DD}	-	

Downloaded from Arrow.com.

.....continued

Parameter	Conditions	Symbol	Min.	Typ.	Max.	Unit
Output low-level current	V_{DD} = 2.7V-3V,	I_{OL}				mA
	PORT.PINCFG.DRVSTR=0		-	-	1	
	V_{DD} = 3V-3.63V,					
	PORT.PINCFG.DRVSTR=0		-	-	2.5	
	V_{DD} = 2.7V-3V,					
	PORT.PINCFG.DRVSTR=1		-	-	3	
	V_{DD} = 3V-3.63V,					
	PORT.PINCFG.DRVSTR=1		-	-	10	
Output high-level current	V_{DD} = 2.7V-3V,	I_{OH}				
	PORT.PINCFG.DRVSTR=0		-	-	0.70	
	V_{DD} = 3V-3.63V,					
	PORT.PINCFG.DRVSTR=0		-	-	2	
	V_{DD} = 2.7V-3V,					
	PORT.PINCFG.DRVSTR=1		-	-	2	
	V_{DD} = 3V-3.63V,					
	PORT.PINCFG.DRVSTR=1		-	-	7	
Rise time	load = 20pF, V_{DD} = 3.3V	t_{RISE}			15	ns
	PORT.PINCFG.DRVSTR=1					
	load = 5pF, V_{DD} = 3.3V				15	
	PORT.PINCFG.DRVSTR=0					
Fall time	load = 20pF, V_{DD} = 3.3V	t_{FALL}			15	ns
	PORT.PINCFG.DRVSTR=1					
	load = 5pF, V_{DD} = 3.3V				15	
	PORT.PINCFG.DRVSTR=0					
Input leakage current	Pull-up resistors disabled	I_{LEAK}	-1	0.015	1	µA

Downloaded from Arrow.com.

Related Links

7.2.3 SERCOM I2C Pins

37.16.3 SERCOM in I2C Mode Timing

41.8.3 USB Pins

Table 41-15. USB Pins Characteristics in I/O Configuration

Parameter	Conditions	Symbol	Min.	Typ.	Max.	Unit
Pull-up - Pull-down resistance		R_{PULL}	20	40	60	kΩ
Input low-level voltage	V_{DD} = 2.7V-3.63V	V_{IL}	-	-	0.29 × V_{DD}	V
Input high-level voltage	V_{DD} = 2.7V-3.63V	V_{IH}	0.55 × V_{DD}	-	-	
Output low-level voltage	V_{DD} > 2.7V, IOL max	V_{OL}	-	0.1 × V_{DD}	0.2 × V_{DD}	
Output high-level voltage	V_{DD} > 2.7V, IOH max	V_{OH}	0.8 × V_{DD}	0.9 × V_{DD}	-	
Output low-level current	V_{DD} = 2.7V-3V	I_{OL}	-	-	3	mA
	V_{DD} = 3V-3.63V		-	-	9	
Output high-level current	V_{DD} = 2.7V-3V	I_{OH}	-	-	2	
	V_{DD} = 3V-3.63V		-	-	7	
Rise time	load = 5pF, V_{DD} = 3.3V	t_{RISE}			15	ns
	load = 20pF, V_{DD} = 3.3V					
Fall time	load = 5pF, V_{DD} = 3.3V	t_{FALL}			15	
	load = 20pF, V_{DD} = 3.3V					
Input leakage current	Pull-up resistors disabled	I_{LEAK}	–1	±0.015	1	µA

41.8.4 XOSC Pin

XOSC pins behave as normal pins when used as normal I/Os. Refer to table “Normal I/O Pins Characteristics”.

41.8.5 XOSC32 Pin

XOSC32 pins behave as normal pins when used as normal I/Os. Refer to table “Normal I/O Pins Characteristics”.

41.8.6 External Reset Pin

Reset pin has the same electrical characteristics as normal I/O pins. Refer to table “Normal I/O Pins Characteristics”.

41.9 Injection Current

Stresses beyond those listed in the table below may cause permanent damage to the device. This is a stress rating only and functional operation of the device at these or other conditions beyond those indicated in the operational sections of this specification is not implied. Exposure to absolute maximum rating conditions for extended periods may affect device reliability.

Table 41-16. Injection Current(1)

Symbol	Description	min	max	Unit
I_{inj1} (2)	IO pin injection current	-1	+1	mA
I_{inj2} (3)	IO pin injection current	-15	+15	mA
$I_{injtotal}$	Sum of IO pins injection current	-45	+45	mA

Downloaded from Arrow.com.

1. Injecting current may have an effect on the accuracy of Analog blocks
2. Conditions for V_{pin}: V_{pin} < GND-0.6V or 3.6V<V_{pin}≤4.2V.

   Conditions for V_{DD}: 3V<V_{DD}≤3.6V.

   If V_{pin} is lower than GND-0.6V, a current limiting resistor is required. The negative DC injection current limiting resistor *R* is calculated as $R = |(GND-0.6V - V_{pin})/I_{inj1}|$.

   If V_{pin} is greater than V_{DD}+0.6V, a current limiting resistor is required. The positive DC injection current limiting resistor *R* is calculated as $R = (V_{pin}-(V_{DD}+0.6))/I_{inj1}$.
3. Conditions for V_{pin}: V_{pin} < GND-0.6V or V_{pin}≤3.6V.

   Conditions for V_{DD}: V_{DD}≤3V.

   If V_{pin} is lower than GND-0.6V, a current limiting resistor is required. The negative DC injection current limiting resistor *R* is calculated as $R = |(GND-0.6V - V_{pin})/I_{inj2}|$.

   If V_{pin} is greater than V_{DD}+0.6V, a current limiting resistor is required. The positive DC injection current limiting resistor *R* is calculated as $R = (V_{pin}-(V_{DD}+0.6))/I_{inj2}$.

41.10 Analog Characteristics

41.10.1 Voltage Regulator Characteristics

Table 41-17. Voltage Regulator Electrical Characteristics

Parameter	Conditions	Symbol	Min.	Typ.	Max.	Unit
DC calibrated output voltage	Voltage regulator normal mode	V_{DDCORE}	1.1	1.23	1.3	V

Note: Supplying any external components using V_{DDCORE} pin is not allowed to assure the integrity of the core supply voltage.

Table 41-18. Decoupling requirements

Symbol	Parameter	Conditions	Min.	Typ.	Max.	Units
C_{IN}(1)	Input regulator capacitor, between V_{DDIN} and GND	Ceramic dielectric X7R	-	10	-	µF
			-	100	-	nF
C_{OUT}(2)	Output regulator capacitor, between V_{DDCORE} and GND	-	0.8	1	-	µF
ESR Cout	External Series Resistance of Cout		-	-	1	Ω

Notes:

1. It is recommended to use ceramic X7R capacitor with low-series resistance. Refer to Figure 45-1 for a typical circuit connections of the decoupling capacitor.
2. It is recommended to use ceramic or solid tantalum capacitor with low ESR <= 1 ohms.

41.10.2 Power-On Reset (POR) Characteristics

Table 41-19. POR Characteristics

Parameter	Conditions	Symbol	Min.	Typ.	Max.	Unit
Voltage threshold level on V_{DDin} rising	V_{DD} falls at 1V/ms or slower	V_{POT+}	1.27	1.43	1.59	V
Voltage threshold level on V_{DDin} falling		V_{POT-}	0.69	0.97	1.32	V

Downloaded from Arrow.com.

Figure 41-2. POR Operating Principle

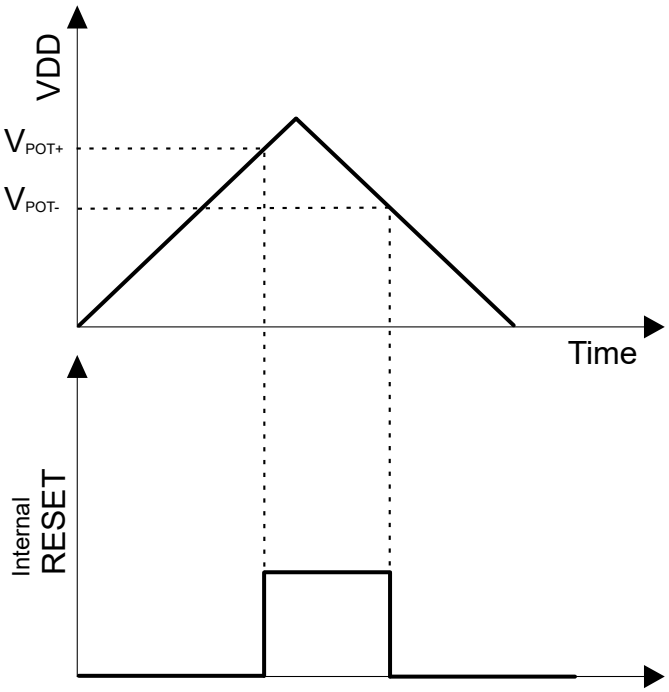

41.10.3 Brown-Out Detectors Characteristics

41.10.3.1 BOD33

Table 41-20. BOD33 LEVEL Value

BOD33.LEVEL	Conditions	Symbol	Min.	Typ.	Max.	Unit
34	Hysteresis ON	VBOD+	-	2.68	2.74	V
39			-	2.87	2.94	
48			-	3.20	3.3	
34	Hysteresis OFF	VBOD- or VBOD	2.51	2.59	2.65	
39			2.7	2.77	2.85	
48			3	3.07	3.2	

Downloaded from Arrow.com.

Note: Refer to *NVM User Row Mapping* for the BOD33 default value settings.

Figure 41-3. BOD33 Hysteresis OFF

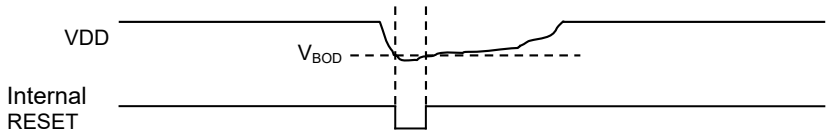

Figure 41-4. BOD33 Hysteresis ON

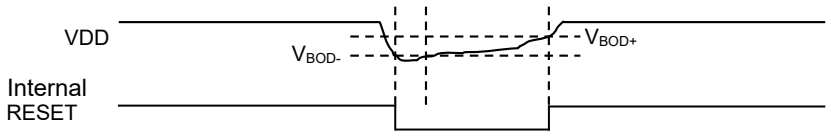

Table 41-21. BOD33 Characteristics

Parameter	Conditions	Symbol	Min.	Typ.	Max.	Unit
Step size, between adjacent values in BOD33.LEVEL			-	34	-	mV
Hysteresis ON	Hysteresis ON	V_{HYST}	35	-	170	mV
Detection time	Time with $V_{DDANA} < V_{TH}$ necessary to generate a reset signal	t_{DET}	-	0.9(1)	-	µs
Startup time		$t_{STARTUP}$	-	2.2(1)	-	µs

Note: 1.These values are based on simulation, and are not covered by test limits in production or characterization.

Table 41-22. BOD33 Power Consumption

Parameter	Conditions	T_j	V_{CC}	Typ.	Max.	Unit
BOD33	IDLE2, Mode CONT	25°C	3.3V	25	48	µA
		–40 to +105°C	3.3V	-	51	
	STDBY, Mode SAMPL	25°C	3.3V	0.132	0.38	
		–40 to +105°C	3.3V	-	1.5	

Related Links

10.3.1 NVM User Row Mapping

41.10.4 Analog-to-Digital Characteristics (ADC)

Table 41-23. Operating Conditions

Parameter	Conditions	Symbol	Min.	Typ.	Max.	Unit
Resolution	-	RES	8	-	12	bits
ADC Clock frequency	-	f_{CLK_ADC}	30	-	2100	kHz
Sample rate (1)	Single shot	-	5	-	300	ksps
	Free running		5	-	350	ksps
Sampling time (1)	-	-	250	-	-	ns
Sampling time with DAC as input(2)	-	-	3	-	-	µs

Downloaded from Arrow.com.

.....continued

Parameter	Conditions	Symbol	Min.	Typ.	Max.	Unit
Sampling time with Temp sens as input(2)	-	-	10	-	-	µs
Sampling time with Bandgap as input(2)	-	-	10	-	-	µs
Conversion time(1)	1x Gain	-	6	-	-	cycles
Voltage reference range (VREFA or VREFB)	-	V_{REF}	1.0	-	V_{DDANA} – 0.6	V
Internal 1V reference(2, 4)	-	INT1V	-	1	-	V
Internal ratiometric reference 0(2)	-	INTVCC0	-	V_{DDANA}/1.48	-	V
Internal ratiometric reference 0(2) error	2.0V < VDDANA<3.63V	INTVCC0 Voltage Error	-1	-	1	%
Internal ratiometric reference 1(2)	VDDANA > 2.0V	INTVCC1	-	V_{DDANA}/2	-	V
Internal ratiometric reference 1(2) error	2.0V < VDDANA < 3.63V	INTVCC1 Voltage Error	–1	-	1	%
Conversion range(1)	Differential mode		$–V_{REF}$/GAIN	-	$+V_{REF}$/GAIN	V
	Single-ended mode		0	-	$+V_{REF}$/GAIN	V
Sampling capacitance (2)	-	C_{SAMPLE}	-	3.5	-	pF
Input channel source resistance(2)	-	R_{SAMPLE}	-	-	3.5	kΩ
DC supply current(1)	f_{CLK_ADC} = 2.1 MHz(3)	I_{DD}	-	2.9	4.1	mA

Notes:

1. These values are based on characterization, and are not covered by test limits in production.
2. These values are based on simulation, and are not covered by test limits in production or characterization.
3. In this condition and for a sample rate of 350 ksps, 1 conversion at gain 1x takes 6 clock cycles of the ADC clock.
4. It is the buffered internal reference of 1.0V derived from the internal 1.1V bandgap reference.

Table 41-24. Differential Mode

Parameter	Conditions	Symbol	Min.	Typ.	Max.	Unit
Effective Number Of Bits	With gain compensation	ENOB	-	10.4	10.8	bits
Total Unadjusted Error	1x Gain	TUE	1.2	7.0	38.0	LSB
Integral Non-linearity	1x Gain	INL	0.7	1.30	5.6	LSB
Differential Non-linearity	1x Gain	DNL	-	±0.7	±0.95	LSB
Gain Error	Ext. Ref 1x	GE	-	±3	±13	mV
	V_{REF} = V_{DDANA}/1.48		-	±11	±55	mV
	VREF = INT1V		-	±2	±35	mV
Gain Accuracy(5)	Ext. Ref. 0.5x		-	±0.1	±0.8	%
	Ext. Ref. 2x to 16x		-	±0.6	±0.9	%
Offset Error	Ext. Ref. 1x	OE	-	±2	±35	mV
	V_{REF}=V_{DDANA}/1.48		-	±3	±40	mV
	VREF = INT1V		-	±3	±50	mV

Downloaded from Arrow.com.

.....continued

Parameter	Conditions	Symbol	Min.	Typ.	Max.	Unit
Spurious Free Dynamic Range	1x Gain F_{CLK_ADC} = 2.1 MHz F_{IN} = 40 kHz A_{IN} = 95% FSR	SFDR	65	71.5	76	dB
Signal-to-Noise and Distortion		SINAD	58	65	67	dB
Signal-to-Noise Ratio		SNR	60	66	68.6	dB
Total Harmonic Distortion		THD	–75	–71	–67	dB
Noise RMS	T = 25°C		0.6	1	2.5	mV

Notes:

1. Maximum numbers are based on characterization and not tested in production, and valid for 5% to 95% of the input voltage range.
2. Dynamic parameter numbers are based on characterization and not tested in production.
3. Respect the Input Common mode voltage through the following equations (where, VCM_IN is the Input Channel Common mode voltage):
   If |VIN| > VREF/4

   VCM_IN < 0.95 × VDDANA + VREF/4 – 0.75V

   VCM_IN > VREF/4 -0.05 × VDDANA – 0.1V

   If |VIN| < VREF/4

   VCM_IN < 1.2 × VDDANA – 0.75V

   VCM_IN > 0.2 × VDDANA – 0.1V
4. The ADC channels on the pins, PA08, PA09, PA10, PA11, are powered from the VDDIO power supply. The ADC performance of these pins will not be the same as all the other ADC channels on pins powered from the VDDANA power supply.
5. The gain accuracy represents the gain error expressed in percent.
   Gain accuracy (%) = (Gain Error in V × 100) / (2 × Vref/GAIN)

Table 41-25. Single-Ended Mode

Parameter	Conditions	Symbol	Min.	Typ.	Max.	Unit
Effective Number of Bits	With gain compensation	ENOB	-	9.6	10.1	Bits
Total Unadjusted Error	1x gain	TUE	3	11	74	LSB
Integral Non-linearity	1x gain	INL	1	4	11	LSB
Differential Non-linearity	1x gain	DNL	-	±0.5	±0.95	LSB
Gain Error	Ext. Ref. 1x	GE	-	±0.9	±10	mV
Gain Accuracy(4)	Ext. Ref. 0.5x		-	±0.2	±0.5	%
	Ext. Ref. 2x to 16X		-	±0.15	±0.3	%
Offset Error	Ext. Ref. 1x	OE	-	±3	±40	mV
Spurious Free Dynamic Range	1x Gain F_{CLK_ADC} = 2.1 MHz F_{IN} = 40 kHz A_{IN} = 95%FSR	SFDR	63	68	70.1	dB
Signal-to-Noise and Distortion		SINAD	55	60.1	62.5	dB
Signal-to-Noise Ratio		SNR	54	61	64	dB
Total Harmonic Distortion		THD	–70	–68	–65	dB
Noise RMS	T = 25°C		-	1	5	mV

Downloaded from Arrow.com.

Notes:

1. Maximum numbers are based on characterization and not tested in production, and for 5% to 95% of the input voltage range.
2. Respect the input common mode voltage through the following equations, where VCM_IN is the Input Channel Common mode voltage for all VIN:
   VCM_IN < 0.7 × VDDANA + VREF/4 – 0.75V

   VCM_IN > VREF/4 – 0.3 × VDDANA – 0.1V
3. The ADC channels on the pins, PA08, PA09, PA10, PA11, are powered from the VDDIO power supply. The ADC performance of these pins will not be the same as all the other ADC channels on pins powered from the VDDANA power supply.
4. The gain accuracy represents the gain error expressed in percent.
   Gain accuracy (%) = (Gain Error in V × 100) / (Vref/GAIN).

41.10.4.1 Performance with the Averaging Digital Feature

Averaging is a feature that increases the sample accuracy. ADC automatically computes an average value of multiple consecutive conversions. The numbers of samples to be averaged is specified by the Number-of-Samples-to-be-Collected bit group in the Average Control register (AVGCTRL.SAMPLENUM[3:0]) and the averaged output is available in the Result register (RESULT).

Table 41-26. Averaging Feature

Average Number	Conditions	SNR (dB)	SINAD (dB)	SFDR (dB)	ENOB (bits)
1	In differential mode, 1x gain, V_{DDANA} = 3.0V, V_{REF} = 1.0V, 350kSps at 25°C	66.0	65.0	72.8	10.5
8		67.6	65.8	75.1	10.62
32		69.7	67.1	75.3	10.85
128		70.4	67.5	75.5	10.91

41.10.4.2 Performance with the Hardware Offset and Gain Correction

Inherent gain and offset errors affect the absolute accuracy of the ADC. The offset error cancellation is handled by the Offset Correction register (OFFSETCORR) and the gain error cancellation, by the Gain Correction register (GAINCORR). The offset and gain correction value is subtracted from the converted data before writing the Result register (RESULT).

Table 41-27. Offset and Gain Correction Feature

Gain Factor	Conditions	Offset Error (mV)	Gain Error (mV)	Total Unadjusted Error (LSB)
0.5x	In differential mode, 1x gain, V_{DDANA} = 3.0V, V_{REF} = 1.0V, 350kSps at 25°C	0.25	1.0	2.4
1x		0.20	0.10	1.5
2x		0.15	–0.15	2.7
8x		–0.05	0.05	3.2
16x		0.10	–0.05	6.1

41.10.4.3 Inputs and Sample and Hold Acquisition Times

The analog voltage source must be able to charge the sample and hold (S/H) capacitor in the ADC in order to achieve maximum accuracy. Seen externally, the ADC input consists of a resistor (R_{SAMPLE}) and a capacitor (C_{SAMPLE}). In addition, the source resistance (R_{SOURCE}) must be taken into account when calculating the required sample and hold time. The next figure shows the ADC input channel equivalent circuit.

Downloaded from Arrow.com.

Figure 41-5. ADC Input

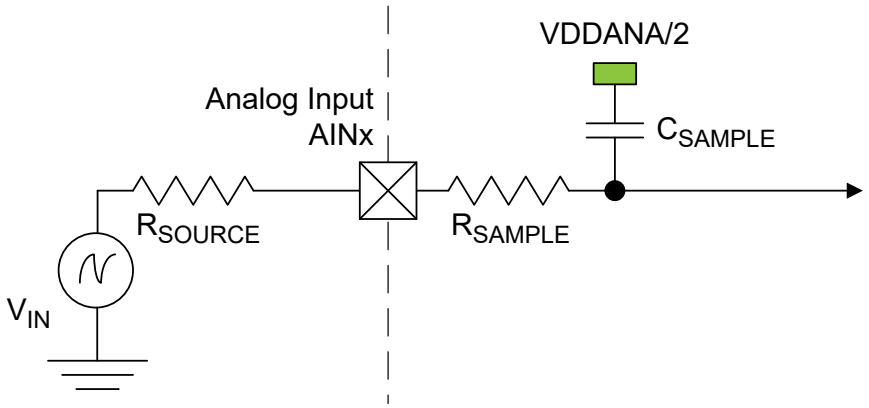

To achieve n bits of accuracy, the C_{SAMPLE} capacitor must be charged at least to a voltage of

$$V_{CSAMPLE} \geq V_{IN} \times \left(1 + -2^{-(n+1)}\right)$$

The minimum sampling time $t_{SAMPLEHOLD}$ for a given R_{SOURCE}can be found using this formula:

$$t_{SAMPLEHOLD} \geq (R_{SAMPLE} + R_{SOURCE}) \times (C_{SAMPLE}) \times (n+1) \times \ln(2)$$

for a 12 bits accuracy: $t_{SAMPLEHOLD} \geq (R_{SAMPLE} + R_{SOURCE}) \times (C_{SAMPLE}) \times 9.02$

41.10.5 Digital-to-Analog Converter (DAC) Characteristics

Table 41-28. Operating Conditions(1)

Symbol	Parameter	Conditions	Min.	Typ.	Max.	Unit
V_{DDANA}	Analog supply voltage		2.7	-	3.63	V
AV_{REF}	External reference voltage		1.0	-	V_{DDANA} – 0.6	V
	INT1V(3)		-	1	-	V
	VDDANA		-	V_{DDANA}	-	V
	Linear output voltage range		0.05	-	V_{DDANA} – 0.05	V
	Minimum resistive load		5	-	-	kΩ
	Maximum capacitance load		-	-	100	pF
I_{DD}	DC supply current(2)	Voltage pump disabled	-	175	256	µA

Notes:

1. These values are based on specifications otherwise noted.
2. These values are based on characterization. These values are not covered by test limits in production.
3. It is the buffered internal reference of 1.0V derived from the internal 1.1V bandgap reference.

Table 41-29. Clock and Timing(1)

Parameter	Conditions		Min.	Typ.	Max.	Unit
Conversion rate	C_{load} = 100pF R_{load} > 5kΩ	Normal mode	-	-	350	ksps
		For Δ_{DATA} = ±1	-	-	1000	
Startup time	V_{DDNA} > 2.6V		-	-	2.85	µs
	V_{DDNA} < 2.6V		-	-	10	µs

Downloaded from Arrow.com.

1. These values are based on simulation. These values are not covered by test limits in production or characterization.

Table 41-30. Accuracy Characteristics(1)

Symbol	Parameter	Conditions		Min.	Typ.	Max.	Unit
RES	Input resolution			-	-	10	Bits
INL	Integral nonlinearity	V_{REF} = Ext 1.0V	V_{DD} = 2.7V	±0.2	±0.5	±1	LSB
			V_{DD} = 3.6V	±0.2	±0.4	±1.2	
		V_{REF} = V_{DDANA}	V_{DD} = 2.7V	±0.2	±0.6	±1.2	
			V_{DD} = 3.6V	±0.2	±0.5	±1.3	
		V_{REF} = INT1V	V_{DD} = 2.7V	±0.4	±0.7	±2	
			V_{DD} = 3.6V	±0.4	±0.8	±6	
DNL	Differential nonlinearity	V_{REF} = Ext 1.0V	V_{DD} = 2.7V	±0.1	±0.3	±0.8	LSB
			V_{DD} = 3.6V	±0.1	±0.3	±0.8	
		V_{REF} = V_{DDANA}	V_{DD} = 2.7V	±0.1	±0.2	±0.5	
			V_{DD} = 3.6V	±0.1	±0.2	±1	
		V_{REF} = INT1V	V_{DD} = 2.7V	±0.3	±0.6	±3	
			V_{DD} = 3.6V	±0.3	±0.8	±7	
GE	Gain error	V_{REF} = Ext. V_{REF}		-	±4	±16	mV
		V_{REF} = V_{DDANA}		-	±12	±60	mV
		V_{REF} = INT1V		-	±1	±22	mV
OE	Offset error	V_{REF} = Ext. V_{REF}		-	±1	±13	mV
		V_{REF} = V_{DDANA}		-	±2.5	±21	mV
		V_{REF} = INT1V		-	±1.5	±20	mV

Note:

1. All values measured using a conversion rate of 35ksps.

41.10.6 Analog Comparator Characteristics

Table 41-31. Electrical and Timing

Parameter	Conditions	Symbol	Min.	Typ.	Max.	Unit
Positive input voltage range			0	-	V_{DDANA}	V
Negative input voltage range			0	-	V_{DDANA}	
Offset	Hysteresis = 0, Fast mode		–26	0	26	mV
	Hysteresis = 0, Low-power mode		–28	0	28	mV
Hysteresis	Hysteresis = 1, Fast mode		8	50	102	mV
	Hysteresis = 1, Low-power mode		14	50	75	mV

Downloaded from Arrow.com.

.....continued						
Parameter	**Conditions**	**Symbol**	**Min.**	**Typ.**	**Max.**	**Unit**
Propagation delay	Changes for V_{ACM} = V_{DDANA}/2 100mV overdrive, Fast mode			90	180	ns
	Changes for V_{ACM} = V_{DDANA}/2 100mV overdrive, Low-power mode			302	534	ns
Start-up time	Enable to ready delay Fast mode	$t_{STARTUP}$		1	2	µs
	Enable to ready delay Low-power mode		-	14	23	µs
INL(3)		V_{SCALE}	–1.4	0.201	1.4	LSB
DNL(3)			–0.9	0.022	0.9	LSB
Offset Error (1)(2)			–0.2	0.056	0.92	LSB
Gain Error (1)(2)			–0.89	0.079	0.89	LSB

1. According to the standard equation V(X) = V_{LSB} × (X + 1); V_{LSB} = V_{DDANA}/64
2. Data computed with the Best Fit method
3. Data computed using histogram

41.10.7 Bandgap and Internal 1.0V Reference Characteristics

Table 41-32. Bandgap and Internal 1.0V Reference Characteristics

Symbol	Parameter	Conditions	Min.	Typ.	Max.	Unit
BANDGAP	Internal 1.1V Bandgap reference	After calibration at T= 25°C, over [–40°C, +105°C], V_{DD} = 3.3V	1.07	1.1	1.12	V
		Over voltage at 25°C	1.08	1.1	1.11	V
INT1V	Internal 1.0V reference voltage (1)	After calibration at T= 25°C, over [-40°C,+105°C], Vdd 3.3V	0.97	1.00	1.02	V
		Over voltage at 25°C	0.98	1.00	1.01	V

Note:

1. These values are simulation based and are not covered by production test limits.

Downloaded from Arrow.com.

41.11 NVM Characteristics

Table 41-33. Maximum Operating Frequency

V_{DD} range	NVM Wait States	Maximum Operating Frequency	Unit
2.7V to 3.63V	0	24	MHz
	1	48	MHz

Note that on this flash technology, a max number of 8 consecutive write is allowed per row. Once this number is reached, a row erase is mandatory.

Table 41-34. Flash Endurance and Data Retention

Parameter	Conditions	Symbol	Min.	Typ.	Max.	Unit
Retention after up to 25k	Average ambient 55°C	Ret_{NVM25k}	10	50	-	Years
Retention after up to 2.5k	Average ambient 55°C	$Ret_{NVM2.5k}$	20	100	-	Years
Retention after up to 100	Average ambient 55°C	Ret_{NVM100}	25	>100	-	Years
Cycling Endurance(1)	–40°C < Ta < 105°C	Cyc_{NVM}	25k	150k	-	Cycles

An endurance cycle is a write and an erase operation.

Table 41-35. EEPROM Emulation(1) Endurance and Data Retention

Parameter	Conditions	Symbol	Min.	Typ.	Max.	Unit
Retention after up to 100k	Average ambient 55°C	$Ret_{EEPROM100k}$	10	50	-	Years
Retention after up to 10k	Average ambient 55°C	$Ret_{EEPROM10k}$	20	100	-	Years
Cycling Endurance(2)	–40°C < Ta < 105°C	Cyc_{EEPROM}	100k	600k	-	Cycles

The EEPROM emulation is a software emulation described in the App note AT03265. An endurance cycle is a write and an erase operation.

Table 41-36. NVM Characteristics

Parameter	Conditions	Symbol	Min.	Typ.	Max.	Unit
Page programming time	-	t_{FPP}	-	-	2.5	ms
Row erase time	-	t_{FRE}	-	-	6	ms
DSU chip erase time (CHIP_ERASE)	-	t_{FCE}	-	-	240	ms

41.12 Oscillators Characteristics

All temperature values are T_C unless otherwise stated.

41.12.1 Crystal Oscillator (XOSC) Characteristics

41.12.1.1 Digital Clock Characteristics

The following table describes the characteristics for the oscillator when a digital clock is applied on XIN.

Downloaded from Arrow.com.

Table 41-37. Digital Clock Characteristics

Parameter	Conditions	Symbol	Min.	Typ.	Max.	Unit
XIN clock frequency	Digital mode	Fx_{in}	-	-	32	MHz
XIN clock duty cycle	Digital mode	DC_{xin}	-	-	-	%

41.12.1.2 XOSC Characteristics

The following table describes the characteristics for the oscillator when a crystal is connected between XIN and XOUT. The user must choose a crystal oscillator where the crystal load capacitance CL is within the range given in the table. The exact value of CL can be found in the crystal data sheet. The capacitance of the external capacitors (CLEXT) can then be computed as follows:

Load Capacitance Equation

$C_{LOAD} = ([C_{XIN} + C_{LEXT}] * [C_{XOUT} + C_{LEXT}]) / ([C_{XIN} + C_{LEXT} + C_{LEXT} + C_{XOUT}]) + C_{STRAY}$

Where:

C_{LOAD} = Crystal Mfg. C_{LOAD} specification

C_{XIN} = XOSC XIN pin data sheet specification

C_{XOUT} = XOSC XOUT pin data sheet specification

C_{LEXT} = Required external crystal load capacitor

C_{STRAY} (Osc PCB capacitance) = 1.5 pf per 12.5 mm (0.5 inches) (TRACE W = 0.175 mm, H = 36 µm, T = 113 µm)

Table 41-38. Crystal Oscillator Characteristics

Parameter	Conditions	Symbol	Min.	Typ.	Max.	Unit
Crystal oscillator frequency		f_{OUT}	0.4	-	32	MHz
Crystal Equivalent Series Resistance Safety Factor = 3 The AGC does not have any noticeable impact on these measurements.	f = 0.455 MHz, C_L = 100pF XOSC.GAIN = 0	ESR	-	-	5.6K	Ω
	f = 2 MHz, C_L = 20pF XOSC.GAIN = 0		-	-	330	
	f = 4 MHz, C_L = 20pF XOSC.GAIN = 1		-	-	240	
	f = 8 MHz, C_L = 20pF XOSC.GAIN = 2		-	-	105	
	f = 16 MHz, C_L = 20pF XOSC.GAIN = 3		-	-	60	
	f = 32 MHz, C_L = 18pF XOSC.GAIN = 4		-	-	55	

Downloaded from Arrow.com.

.....continued

Parameter	Conditions	Symbol	Min.	Typ.	Max.	Unit
Parasitic capacitor load		C_{XIN}	-	5.9	-	pF
Parasitic capacitor load		C_{XOUT}	-	3.2	-	pF

Parameter	Conditions	Symbol	Min.	Typ.	Max.	Unit
Startup time	f = 2 MHz, C_L = 20pF, XOSC.GAIN = 0, ESR = 600Ω	$t_{STARTUP}$	-	15.6K	51.0K	cycles
	f = 4 MHz, C_L = 20pF, XOSC.GAIN = 1, ESR = 100Ω		-	6.3K	20.1K	
	f = 8 MHz, C_L = 20pF, XOSC.GAIN = 2, ESR = 35Ω		-	6.2K	20.3K	
	f = 16 MHz, C_L = 20pF, XOSC.GAIN = 3, ESR = 25Ω		-	7.7K	21.2K	
	f = 32 MHz, C_L = 18pF, XOSC.GAIN = 4, ESR = 40Ω		-	6.0K	14.2K	

Downloaded from Arrow.com.

Parameter	Conditions	Symbol	Min.	Typ.	Max.	Unit
Current Consumption	f = 2 MHz, C_L = 20pF, XOSC.GAIN = 0, AGC off		-	89	190	µA
	f = 2 MHz, C_L = 20pF, XOSC.GAIN = 0, AGC on		-	82	187	
	f = 4 MHz, C_L = 20pF, XOSC.GAIN = 1, AGC off		-	140	256	
	f = 4 MHz, C_L = 20pF, XOSC.GAIN = 1, AGC on		-	102	219	
	f = 8 MHz, C_L = 20pF, XOSC.GAIN = 2, AGC off		-	243	380	

Downloaded from Arrow.com.

.....continued

Parameter	Conditions	Symbol	Min.	Typ.	Max.	Unit
Current Consumption	f = 8 MHz, C_L = 20pF, XOSC.GAIN = 2, AGC on		-	166	299	µA
	f = 16 MHz, C_L = 20pF, XOSC.GAIN = 3, AGC off		-	493	685	
	f = 16 MHz, C_L = 20pF, XOSC.GAIN = 3, AGC on		-	293	480	
	f = 32 MHz, C_L = 18pF, XOSC.GAIN = 4, AGC off		-	1343	1975	
	f = 32 MHz, C_L = 18pF, XOSC.GAIN = 4, AGC on		-	555	776	

Figure 41-6. Oscillator Connection

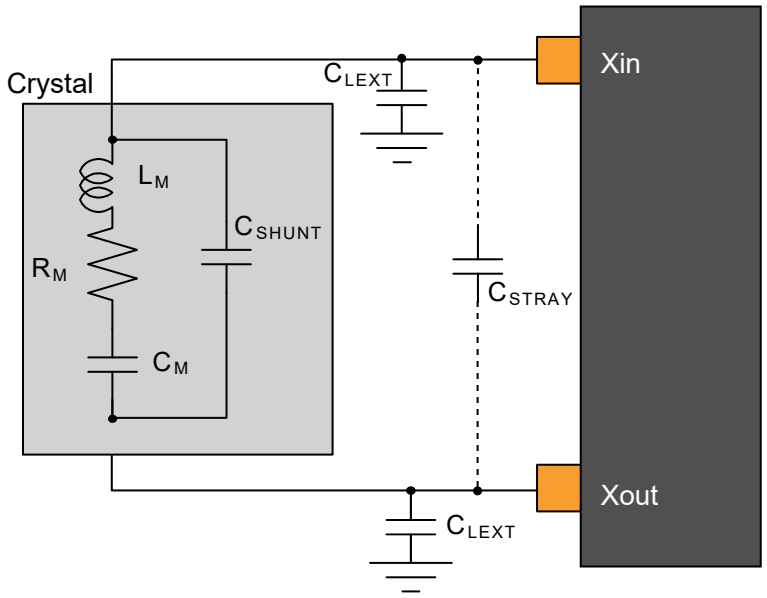

Downloaded from Arrow.com.

41.12.2 External 32 kHz Crystal Oscillator (XOSC32K) Characteristics

41.12.2.1 Digital Clock Characteristics

The following table describes the characteristics for the oscillator when a digital clock is applied on XIN32 pin.

Table 41-39. Digital Clock Characteristics

Parameter	Conditions	Symbol	Min.	Typ.	Max.	Unit
XIN32 clock frequency		$f_{CPXIN32}$	-	32.768	-	kHz
XIN32 clock duty cycle		DCxin	-	50	-	%

41.12.2.2 XOSC32K Characteristics

Figure 41-6 and the equation in 41.12.1.2 XOSC Characteristics also apply to the 32 kHz oscillator connection. The user must choose a crystal oscillator where the crystal load capacitance C_L is within the range given in the table. The exact value of C_L can be found in the crystal data sheet.

Table 41-40. 32 kHz Crystal Oscillator Characteristics

Parameter	Conditions	Symbol	Min.	Typ.	Max.	Unit
Crystal oscillator frequency		f_{OUT}	-	32768	-	Hz
Start-up time	ESR_{XTAL} = 39.9 kΩ, C_L = 12.5 pF	$t_{STARTUP}$	-	28K	30K	cycles
Crystal load capacitance		C_L	-	-	12.5	pF
Crystal shunt capacitance		C_{SHUNT}	-	0.1	-	pF
Parasitic capacitor load		C_{XIN32}	-	3.2	-	pF
Parasitic capacitor load		C_{XOUT32}	-	3.7	-	pF
Current consumption		$I_{XOSC32K}$	-	1.22	2.2	µA
Crystal equivalent series resistance f = 32.768 kHz Safety Factor = 3	C_L=12.5pF	ESR	-	-	100	kΩ

41.12.3 Digital Frequency Locked Loop (DFLL48M) Characteristics

Table 41-41. DFLL48M Characteristics - Open Loop Mode

Parameter	Conditions	Symbol	Min.	Typ.	Max.	Unit
Output frequency	DFLLVAL.COARSE = DFLL48M COARSE CAL DFLLVAL.FINE = 512 over [–10, +105]C, over [2.7, 3.6]V	f_{OUT}	44.75	48	49	MHz
Output frequency	DFLLVAL.COARSE = DFLL48M COARSE CAL DFLLVAL.FINE = 512 over [–40, +105]C, over [2.7, 3.6]V	f_{OUT}	43.75	48	49	MHz
Output frequency	DFLLVAL.COARSE = DFLL48M COARSE CAL DFLLVAL.FINE = 512 at 25°C, over [2.7, 3.6]V	f_{OUT}	45.5	48	49	MHz

Downloaded from Arrow.com.

.....continued						
Parameter	**Conditions**	**Symbol**	**Min.**	**Typ.**	**Max.**	**Unit**
Power consumption on V_{DDIN}	DFLLVAL.COARSE = DFLL48M COARSE CAL DFLLVAL.FINE = 512	I_{DFLL}	-	403	453	µA
Startup time	DFLLVAL.COARSE = DFLL48M COARSE CAL DFLLVAL.FINE = 512 f_{OUT} within 90 % of final value	$t_{STARTUP}$	-	8.6	11.5	µs

Table 41-42. DFLL48M Characteristics - Closed Loop Mode(1)

Parameter	Conditions	Symbol	Min.	Typ.	Max.	Unit
Average Output frequency	f_{REF} = XTAL, 32.768kHz, 100ppm DFLLMUL = 1464	$f_{CloseOUT}$	47.963	47.972	47.981	MHz
Reference frequency		f_{REF}	0.732	32.768	33	kHz
Cycle to Cycle jitter	f_{REF} = XTAL, 32.768kHz, 100ppm DFLLMUL = 1464	Jitter	-	-	0.42	ns
Power consumption on V_{DDIN}	f_{REF} = XTAL, 32.768kHz, 100ppm	I_{DFLL}	-	403	453	µA
Lock time	f_{REF} = XTAL, 32.768kHz, 100ppm DFFLMUL = 1464 DFLLVAL.COARSE = DFLL48M COARSE CAL DFLLVAL.FINE = 512 DFLLCTRL.BPLCKC = 1 DFLLCTRL.QLDIS = 0 DFLLCTRL.CCDIS = 1 DFLLMUL.FSTEP = 10	t_{LOCK}	-	350	1500	µs

Notes:

1. All parts are tested in production to be able to use the DFLL as main CPU clock whether in DFLL closed loop mode with an external OSC reference or the internal OSC8M.
2. To ensure that the device stays within the maximum allowed clock frequency, any reference clock for DFLL in close loop must be within a 2% error accuracy.

Downloaded from Arrow.com.

41.12.4 32.768 kHz Internal oscillator (OSC32K) Characteristics

Table 41-43. 32 kHz RC Oscillator Characteristics

Parameter	Conditions	Symbol	Min.	Typ.	Max.	Unit
Output frequency	All temperatures T_C Calibrated against a 32.768 kHz reference at 25°C, over [–40, +105]°C, over [2.7, 3.63]V	f_{OUT}	26.214	32.768	39.321	kHz
	Calibrated against a 32.768 kHz reference at 25°C, at V_{DD} = 3.3V		32.113	32.768	33.423	
	Calibrated against a 32.768 kHz reference at 25°C, over [2.7, 3.63]V		31.457	32.768	34.079	
Current consumption		I_{OSC32K}		0.67	4.06	µA
Startup time		$t_{STARTUP}$		1	2	cycle
Duty Cycle		Duty		50		%

41.12.5 Ultra Low-Power Internal 32 kHz RC Oscillator (OSCULP32K) Characteristics

Table 41-44. Ultra Low-Power Internal 32 kHz RC Oscillator Characteristics

Parameter	Conditions	Symbol	Min.	Typ.	Max.	Unit
Output frequency	All temperatures T_C Calibrated against a 32.768 kHz reference at 25°C, over [–40, +105]°C, over [2.7, 3.63]V	f_{OUT}	24.576	32.768	40.960	kHz
	Calibrated against a 32.768 kHz reference at 25°C, at VDD = 3.3V		31.457	32.768	34.078	
	Calibrated against a 32.768 kHz reference at 25°C, over [2.7, 3.63]V		31.293	32.768	34.570	
Duty Cycle		Duty	-	50	-	%

1. These values are based on simulation. These values are not covered by test limits in production or characterization.

Downloaded from Arrow.com.

2. This oscillator is always on.

41.12.6 8 MHz RC Oscillator (OSC8M) Characteristics

Table 41-45. Internal 8 MHz RC Oscillator Characteristics

Parameter	Conditions	Symbol	Min.	Typ.	Max.	Unit
Output frequency	Calibrated against a 8 MHz reference at 25°C, over [–10, +70]°C, over [2.7, 3.6]V	f_{OUT}	7.84	8	8.16	MHz
	Calibrated against a 8 MHz reference at 25°C, over [–10, +105]°C, over [2.7, 3.6]V		7.80	8	8.20	
	Calibrated against a 8 MHz reference at 25°C, over [–40, +105]°C, over [2.7, 3.6]V		7.66	8	8.34	
	Calibrated against a 8 MHz reference at 25°C, over [2.7, 3.6]V		7.88	8	8.12	
Current consumption	IDLE2 on OSC32K versus IDLE2 on calibrated OSC8M enabled at 8 MHz (FRANGE = 1, PRESC = 0)	I_{OSC8M}	-	64	96	µA
Startup time		$t_{STARTUP}$	-	2.3	3.9	µs
Duty cycle		Duty	-	50	-	%

41.12.7 Fractional Digital Phase Locked Loop (FDPLL96M) Characteristics

Table 41-46. FDPLL96M Characteristics(1) (Device Variant A / Die revision E)

Parameter	Conditions	Symbol	Min.	Typ.	Max.	Unit
Input frequency		f_{IN}	32	-	2000	kHz
Output frequency		f_{OUT}	48	-	96	MHz
Current consumption	f_{IN} = 32kHz, f_{OUT} = 48MHz	$I_{FDPLL96M}$	-	500	733	µA
	f_{IN} = 32kHz, f_{OUT} = 96MHz		-	900	1235	
Period jitter	f_{IN} = 32kHz, f_{OUT} = 48MHz	Jp	-	1.3	4	%
	f_{IN} = 32kHz, f_{OUT} = 96MHz		-	3.1	7	
	f_{IN} = 2MHz, f_{OUT} = 48MHz		-	1.3	4	
	f_{IN} = 2MHz, f_{OUT} = 96MHz		-	3.6	9	

Downloaded from Arrow.com.

.....continued						
Parameter	**Conditions**	**Symbol**	**Min.**	**Typ.**	**Max.**	**Unit**
Lock Time	After startup, time to get lock signal. f_{IN} = 32kHz, f_{OUT} = 96MHz	t_{LOCK}	-	1	2	ms
	f_{IN} = 2MHz, f_{OUT} = 96MHz		-	25	50	µs
Duty cycle		Duty	40	50	60	%

Table 41-47. FDPLL96M Characteristics(1) (Device Variant B / Die revision F)

Parameter	Conditions	Symbol	Min.	Typ.	Max.	Unit
Input frequency		f_{IN}	32	-	2000	kHz
Output frequency		f_{OUT}	48	-	96	MHz
Current consumption	f_{IN} = 32kHz, f_{OUT} = 48MHz	$I_{FDPLL96M}$	-	500	-	µA
	f_{IN} = 32kHz, f_{OUT} = 96MHz		-	900	-	
Period jitter	f_{IN} = 32kHz, f_{OUT} = 48MHz	Jp	-	2.1	4.0	%
	f_{IN} = 32kHz, f_{OUT} = 96MHz		-	4.0	11.0	
	f_{IN} = 2MHz, f_{OUT} = 48MHz		-	2.2	4.0	
	f_{IN} = 2MHz, f_{OUT} = 96MHz		-	4.7	12.0	
Lock Time	After startup, time to get lock signal. f_{IN} = 32kHz, f_{OUT} = 96MHz	t_{LOCK}	-	1.2	2	ms
	f_{IN} = 2MHz, f_{OUT} = 96MHz		-	25	35	µs
Duty cycle		Duty	40	50	60	%

1. All values have been characterized with FILTSEL[1/0] as default value.

Downloaded from Arrow.com.

41.13 PTC Typical Characteristics

41.13.1 Device Variant A

Figure 41-7. Power Consumption [µA]
1 sensor, noise countermeasures disabled, f=48MHz, Vcc=3.3V

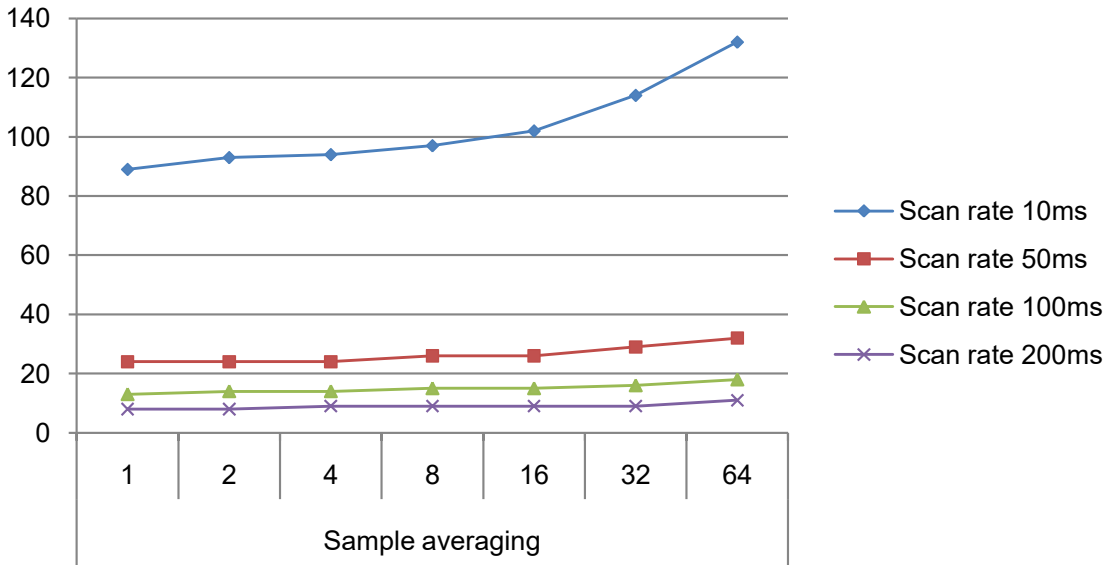

Figure 41-8. Power Consumption [µA]
1 sensor, noise countermeasures Enabled, f=48MHz, Vcc=3.3V

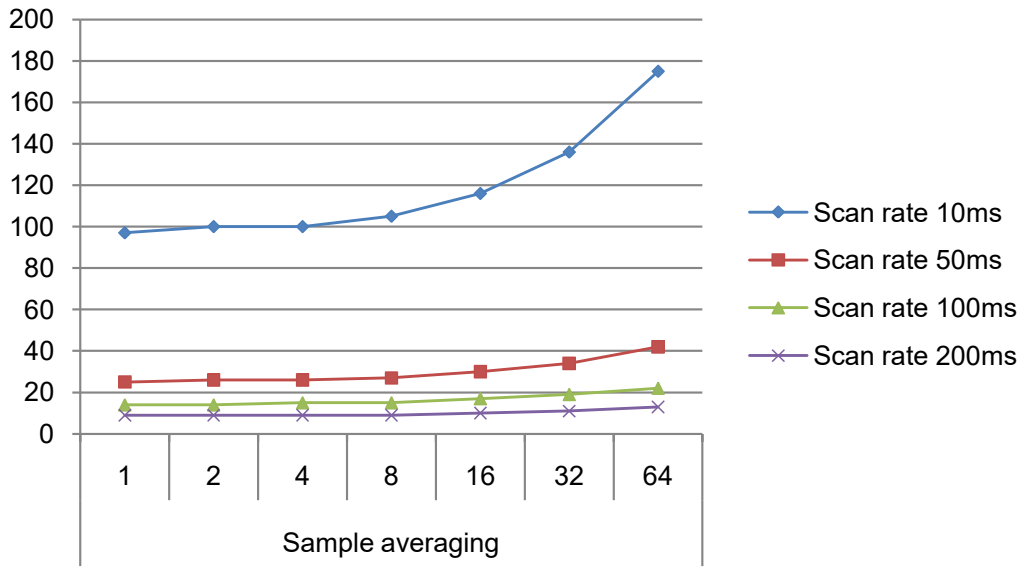

Downloaded from Arrow.com.

Figure 41-9. Power Consumption [µA]
10 sensors, noise countermeasures disabled, f=48MHz, Vcc=3.3V

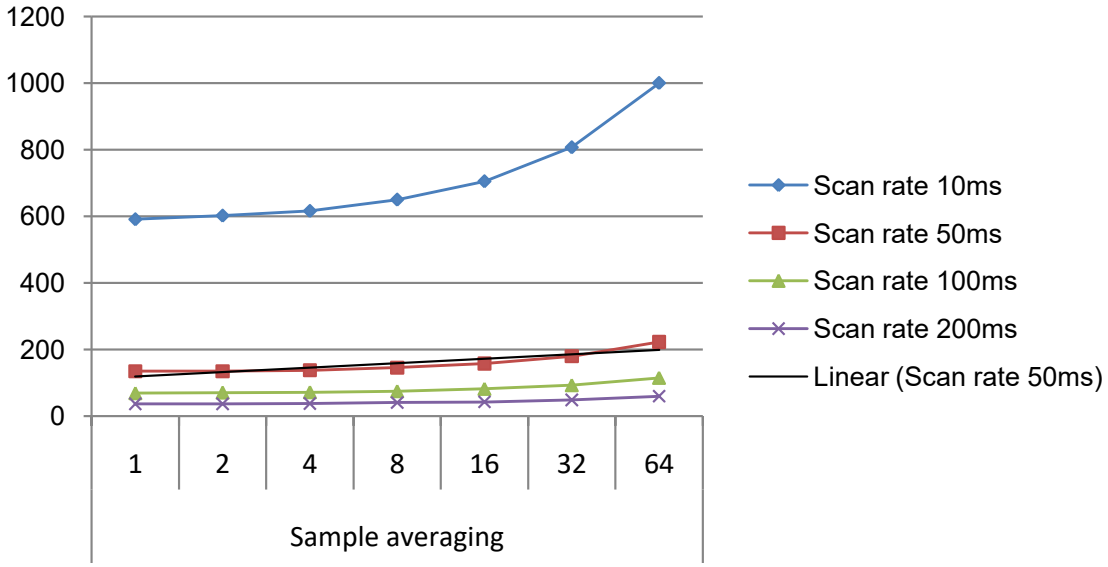

Figure 41-10. Power Consumption [µA]
10 sensors, noise countermeasures Enabled, f=48MHz, Vcc=3.3V

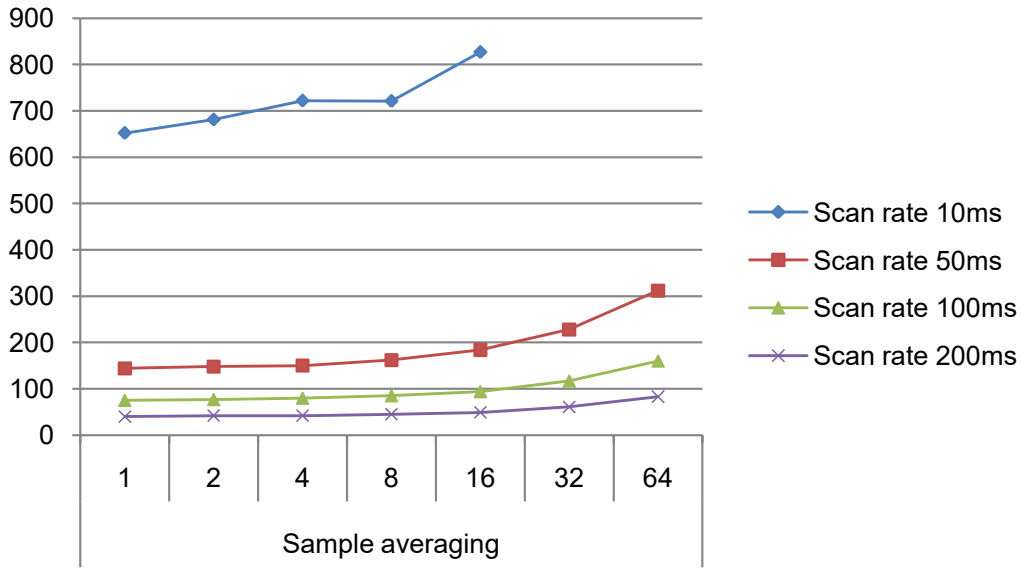

Downloaded from Arrow.com.

Figure 41-11. Power Consumption [µA]
100 sensors, noise countermeasures disabled, f=48MHz, Vcc=3.3V

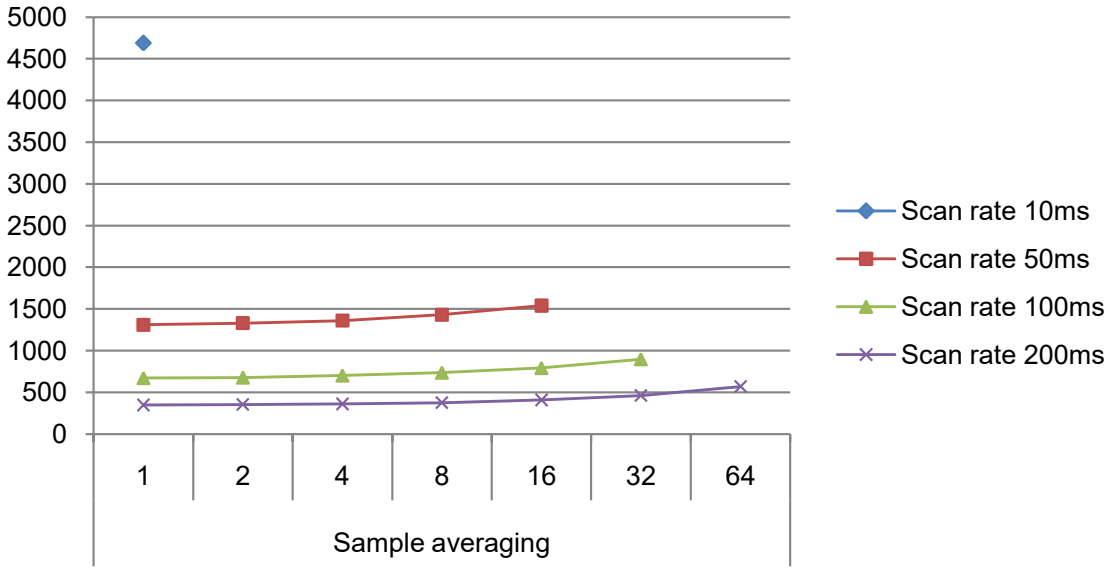

Figure 41-12. Power Consumption [µA]
100 sensors, noise countermeasures Enabled, f=48MHz, Vcc=3.3V

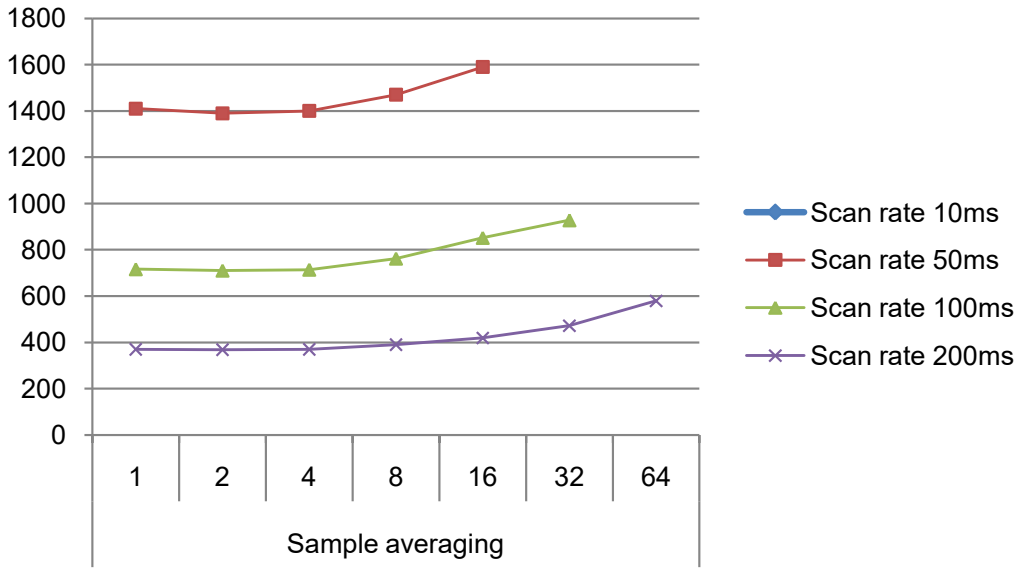

Downloaded from Arrow.com.

Figure 41-13. CPU Utilization

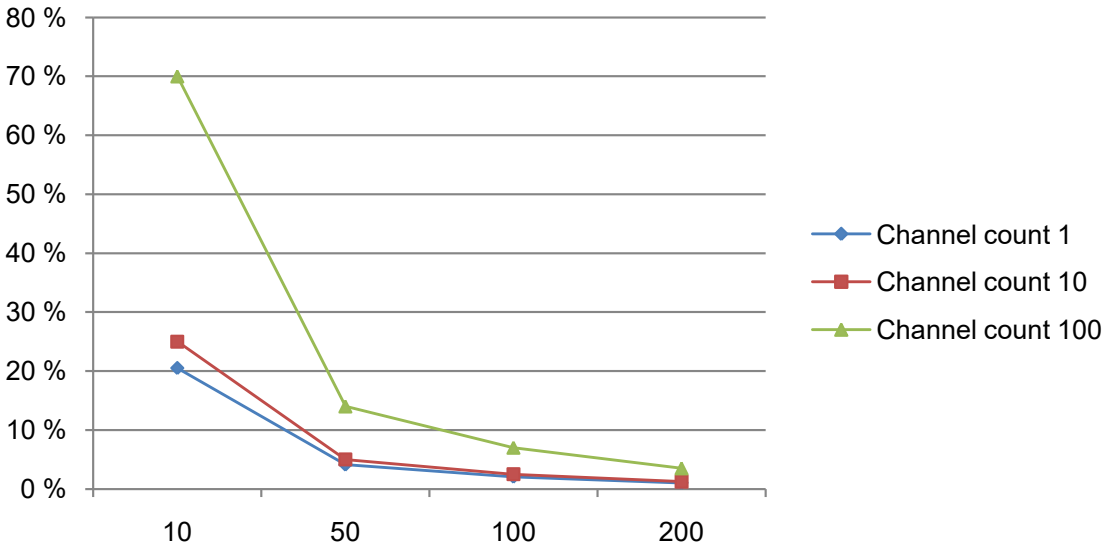

41.13.2 Device Variant B,C and D

V_{CC} = 3.3C and f_{CPU} = 48 MHz for the following PTC measurements.

Figure 41-14. 1 Sensor / PTC_GCLK = 4 MHz / FREQ_MODE_NONE

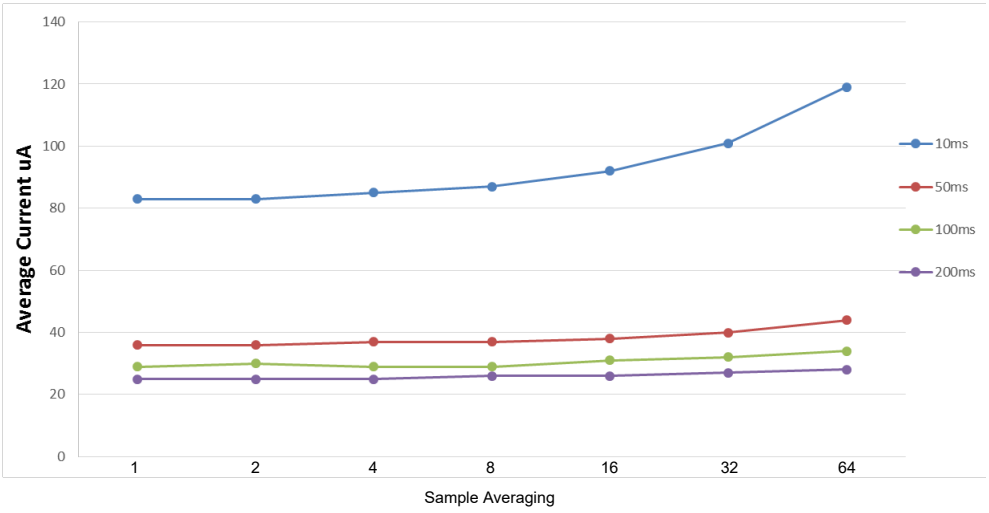

Downloaded from Arrow.com.

Figure 41-15. 1 Sensor / PTC_GCLK = 2 MHz / FREQ_MODE_HOP

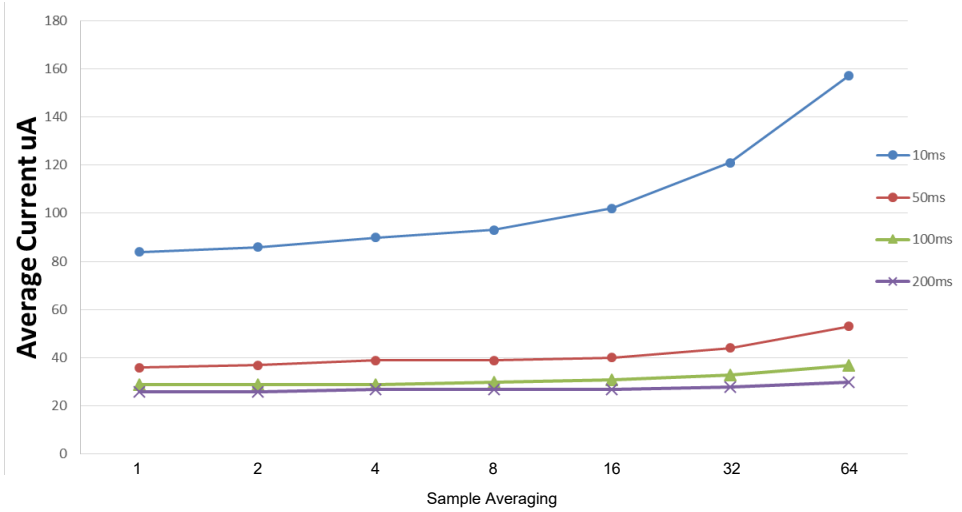

Figure 41-16. 10 Sensor / PTC_GCLK = 4 MHz / FREQ_MODE_NONE

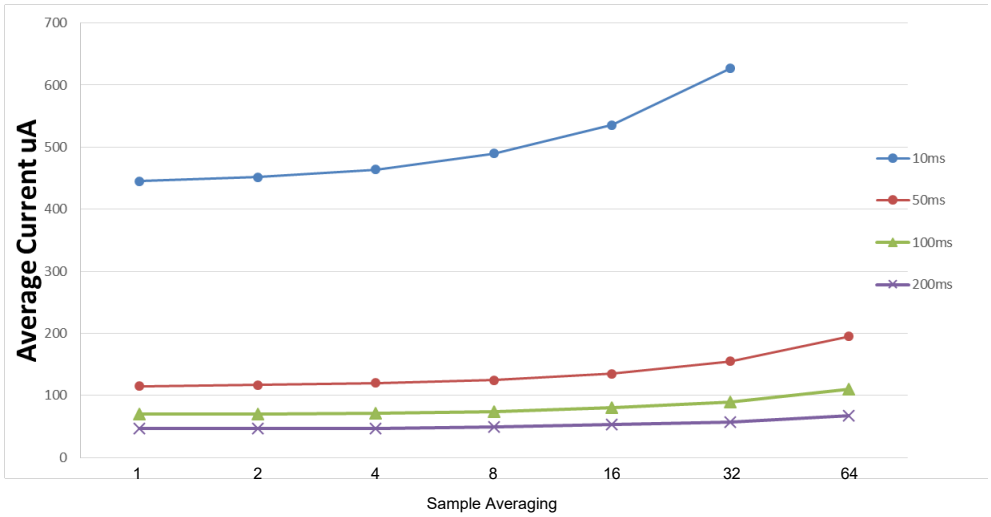

Downloaded from Arrow.com.

Figure 41-17. 10 Sensor / PTC_GCLK = 2 MHz / FREQ_MODE_HOP

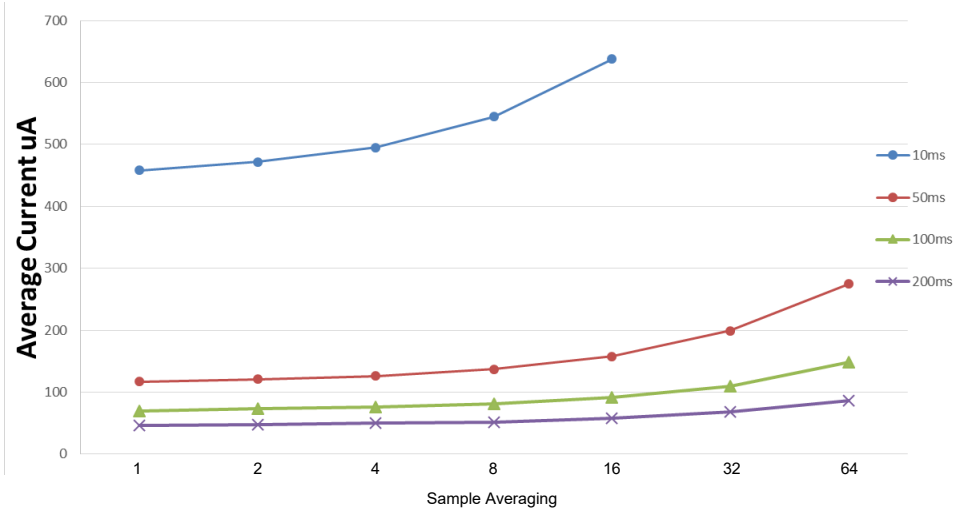

Figure 41-18. 100 Sensor / PTC_GCLK = 4 MHz / FREQ_MODE_NONE

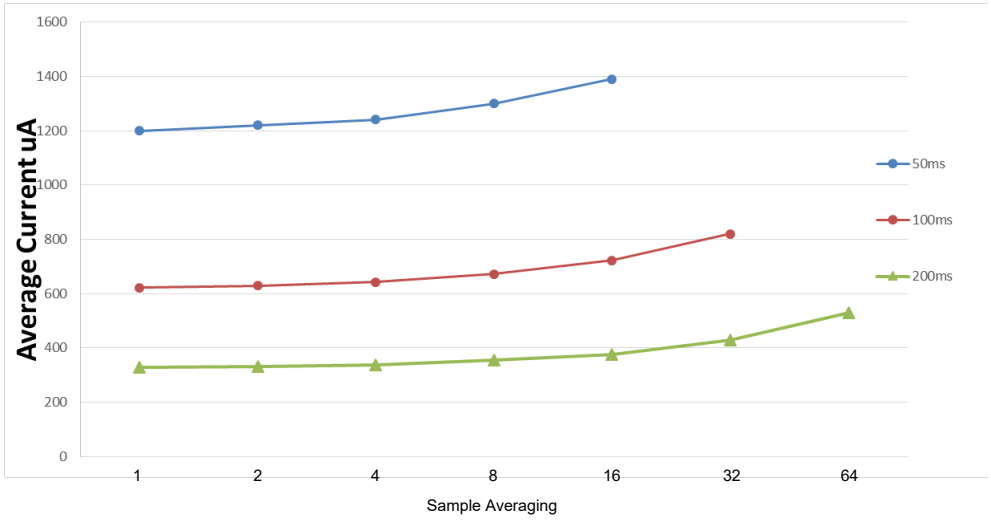

Downloaded from Arrow.com.

Figure 41-19. 100 Sensor / PTC_GCLK = 2 MHz / FREQ_MODE_HOP

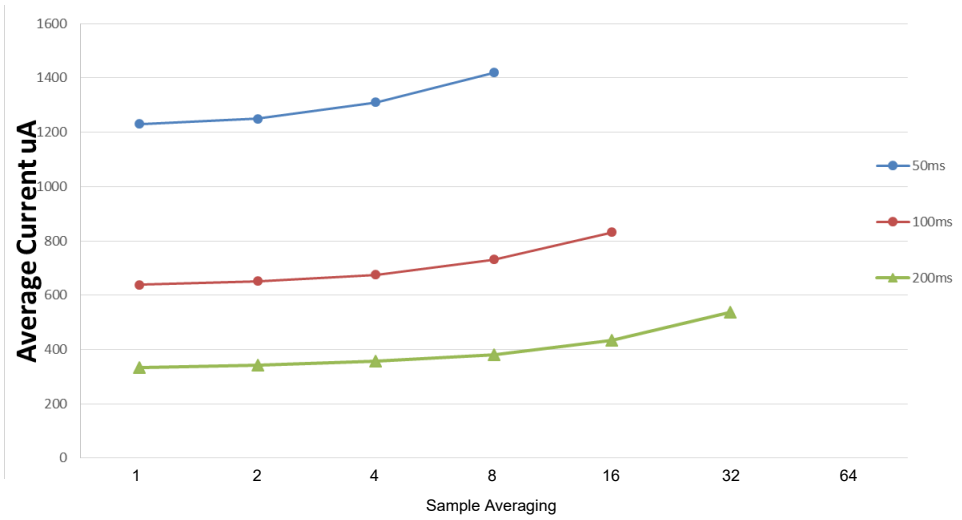

Table 41-48. Sensor Load Capacitance

Symbol	Mode	PTC channel	Max Sensor Load (1)	Units
Cload	Self-capacitance	Y0	16	pF
		Y1	23	
		Y2	19	
		Y3	23	
		Y4		
		Y5		
		Y6		
		Y7		
		Y8		
		Y9		
		Y10	19	
		Y11	23	
		Y12		
		Y13		
		Y14		
		Y15		
	Mutual-capacitance	All	30	

Note:

1. Capacitance load that the PTC circuitry can compensate for each channel.

Downloaded from Arrow.com.

Table 41-49. Analog Gain Settings

Symbol	Setting	Average
Gain	GAIN_1	1.0
	GAIN_2	2.0
	GAIN_4	3.8
	GAIN_8	8.0
	GAIN_16	12.4
	GAIN_32	-

Notes:

1. Analog Gain is a parameter of the QTouch Library. Refer to the QTouch Library Peripheral Touch Controller User Guide.
2. GAIN_16 and GAIN_32 settings are not recommended, otherwise the PTC measurements might get unstable.

The values in the Power Consumption table below are measured values of power consumption under the following conditions:

Operating conditions

VDD = 3.3 V

Clocks

OSC8M used as main clock source, running undivided at 8MHz

CPU is running on flash with 0 wait states, at 8MHz

PTC running at 4MHz

PTC configuration

Mutual-capacitance mode

One touch channel

System configuration

Standby sleep mode enabled

RTC running on OSCULP32K: used to define the PTC scan rate, through the event system

Drift Calibration disabled: no interrupts, PTC scans are performed in standby mode

Drift Calibration enabled: RTC interrupts (wakeup) the CPU to perform PTC scans. PTC drift calibration is performed every 1.5 sec.

Downloaded from Arrow.com.

Table 41-50.

Symbol	Parameters	Drift Calibration	PTC scan rate (msec)	Oversamples	Ta	Typ.	Max	Units
IDD	Current Consumption	Disabled	10	4	Max 85°C Typ 25°C	9	107	µA
				16		17	117	
			50	4		5	102	
				16		6	104	
			100	4		4	102	
				16		5	103	
			200	4		4	102	
				16		4	102	
		Enabled	10	4		15	114	
				16		23	124	
			50	4		7	105	
				16		8	108	
			100	4		5	103	
				16		6	105	
			200	4		6	103	
				16		6	104	

41.14 USB Characteristics

The USB on-chip buffers comply with the Universal Serial Bus (USB) v2.0 standard. All AC parameters related to these buffers can be found within the USB 2.0 electrical specifications.

The USB interface is USB-IF certified:

- TID 40001583 - Peripheral Silicon > Low/Full Speed > Silicon Building Blocks

- TID 120000272 - Embedded Hosts > Full Speed

Electrical configuration required to be USB compliance:

- The CPU frequency must be higher 8MHz when USB is active (No constraint for USB suspend mode)

- The operating voltages must be 3.3V (Min. 3.0V, Max. 3.6V).

- The GCLK_USB frequency accuracy source must be less than:

- In USB device mode, 48MHz +/-0.25%

- In USB host mode, 48MHz +/-0.05%

Table 41-51. GCLK_USB Clock Setup Recommendations

Clock setup		USB Device	USB Host
DFLL48M	Open loop	No	No
	Closed loop, any internal OSC source	No	No
	Closed loop, any external XOSC source	Yes	No
	Closed loop, USB SOF source (USB recovery mode)(1)	Yes(2)	N/A

Downloaded from Arrow.com.

.....continued			
Clock setup		**USB Device**	**USB Host**
FDPLL96M	Any internal OSC source (32K, 8M, ...)	No	No
	Any external XOSC source (< 1MHz)	Yes	No
	Any external XOSC source (> 1MHz)	Yes(3)	Yes

Notes: 1. When using DFLL48M in USB recovery mode, the Fine Step value must be Ah to guarantee a USB clock at +/-0.25% before 11ms after a resume.

2. Very high signal quality and crystal less. It is the best setup for USB Device mode.

3. FDPLL lock time is short when the clock frequency source is high (> 1MHz). Thus, FDPLL and external OSC can be stopped during USB suspend mode to reduce consumption and guarantee a USB wake-up time (See TDRSMDN in USB specification).

41.15 Timing Characteristics

41.15.1 External Reset

Table 41-52. External Reset Characteristics

Symbol	Parameter	Condition	Min.	Typ.	Max.	Units
t_{EXT}	Minimum reset pulse width		10	-	-	ns

Table 41-53. External Reset Characteristics (Silicon Revision G)

Symbol	Parameter	Condition	Min.	Typ.	Max.	Units
t_{EXT}	Minimum reset pulse width		1000	-	-	ns

41.15.2 SERCOM in SPI Mode Timing

Figure 41-20. SPI Timing Requirements in Host Mode

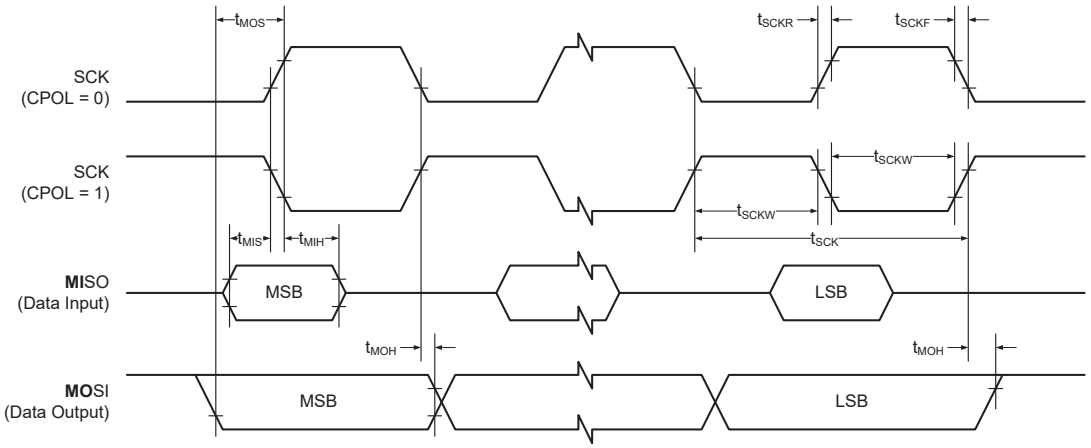

Downloaded from Arrow.com.

Figure 41-21. SPI Timing Requirements in Client Mode

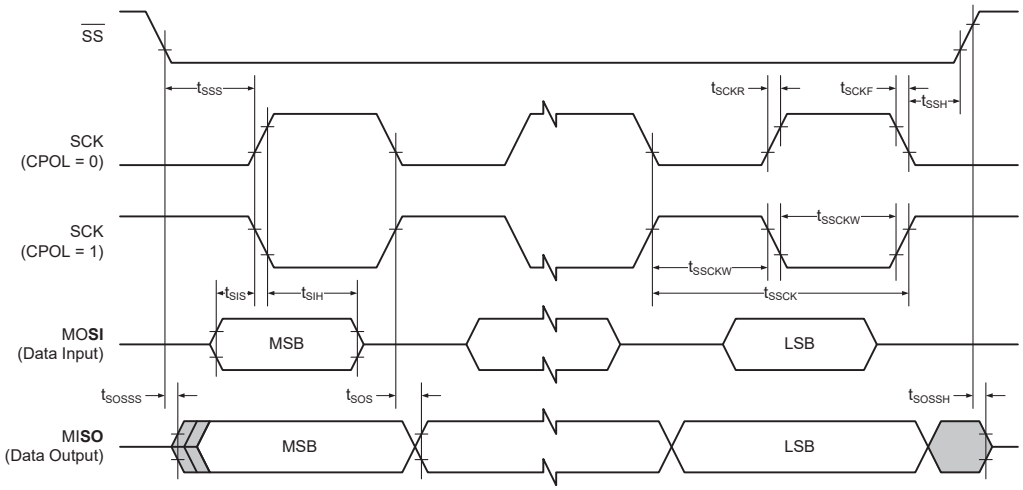

Table 41-54. SPI Timing Characteristics and Requirements(1)

Symbol	Parameter	Conditions		Min.	Typ.	Max.	Units
t_{SCK}	SCK period	Host			84		ns
t_{SCKW}	SCK high/low width	Host		-	$0.5*t_{SCK}$	-	
t_{SCKR}	SCK rise time(2)	Host		-	-	-	
t_{SCKF}	SCK fall time(2)	Host		-	-	-	
t_{MIS}	MISO setup to SCK	Host		-	21	-	
t_{MIH}	MISO hold after SCK	Host		-	13	-	
t_{MOS}	MOSI setup SCK	Host		-	$t_{SCK}/2 - 3$	-	
t_{MOH}	MOSI hold after SCK	Host		-	3	-	
t_{SSCK}	Client SCK Period	Client		$1*t_{CLK_APB}$	-	-	
t_{SSCKW}	SCK high/low width	Client		$0.5*t_{SSCK}$	-	-	
t_{SSCKR}	SCK rise time(2)	Client		-	-	-	
t_{SSCKF}	SCK fall time(2)	Client		-	-	-	
t_{SIS}	MOSI setup to SCK	Client		$t_{SSCK}/2 - 9$	-	-	
t_{SIH}	MOSI hold after SCK	Client		$t_{SSCK}/2 - 3$	-	-	
t_{SSS}	$\overline{SS}$ setup to SCK	Client	PRELOADEN=1	$2*t_{CLK_APB} + t_{SOS}$	-	-	
			PRELOADEN=0	$t_{SOS}+7$	-	-	
t_{SSH}	$\overline{SS}$ hold after SCK	Client		$t_{SIH} - 4$	-	-	
t_{SOS}	MISO setup SCK	Client		-	$t_{SSCK}/2 - 18$	-	
t_{SOH}	MISO hold after SCK	Client		-	18	-	
t_{SOSS}	MISO setup after $\overline{SS}$ low	Client		-	18	-	
t_{SOSH}	MISO hold after $\overline{SS}$ high	Client		-	10	-	

Downloaded from Arrow.com.

Notes:

1. These values are based on simulation. These values are not covered by test limits in production.
2. See 41.8 I/O Pin Characteristics.

41.15.3 SERCOM in I²C Mode Timing

This section describes the requirements for devices connected to the I²C Interface Bus.

Figure 41-22. I²C Interface Bus Timing

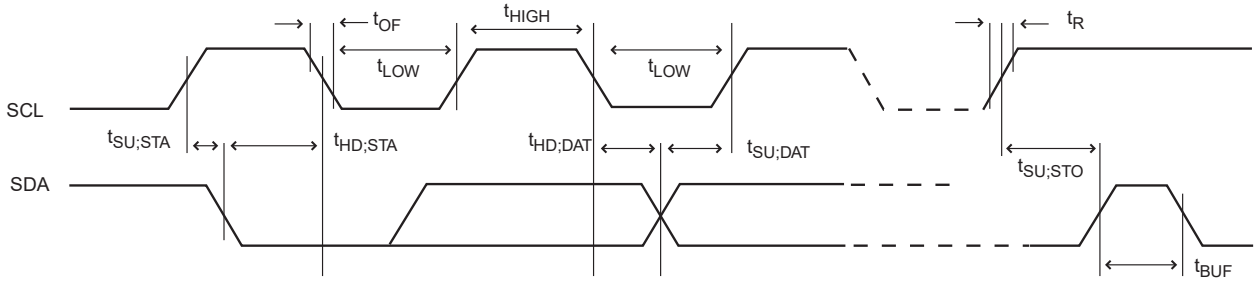

Table 41-55. I²C Interface Timing (Device Variant A)

Symbol	Parameter		Conditions	Min.	Typ.	Max.	Units
t_R	Rise time for both SDA and SCL	Standard / Fast Mode	IC_b(2) = 400pF	-	215	300	ns
		Fast Mode +	IC_b(2) = 550pF		60	100	
		High Speed Mode	IC_b(2) = 100pF		20	40	
t_{OF}	Output fall time from V_{IHmin} to V_{ILmax}	Standard / Fast Mode	10pF < C_b(2) < 400pF		20.0	50.0	
		Fast Mode +	10pF < C_b(2) < 550pF		15.0	50.0	
		High Speed Mode	10pF < C_b(2)< 100pF		10.0	40.0	
$t_{HD;STA}$	Hold time (repeated) START condition		f_{SCL} > 100 kHz, Host	t_{LOW}-9	-	-	
t_{LOW}	Low period of SCL Clock		f_{SCL} > 100 kHz	113	-	-	
t_{BUF}	Bus free time between a STOP and a START condition		f_{SCL} > 100 kHz	t_{LOW}	-	-	
$t_{SU;STA}$	Setup time for a repeated START condition		f_{SCL} > 100 kHz, Host	t_{LOW}+7	-	-	
$t_{HD;DAT}$	Data hold time		f_{SCL} > 100 kHz, Host	9	-	12	
$t_{SU;DAT}$	Data setup time		f_{SCL} > 100 kHz, Host	104	-	-	
$t_{SU;STO}$	Setup time for STOP condition		f_{SCL} > 100 kHz, Host	t_{LOW}+9	-	-	
$t_{SU;DAT;rx}$	Data setup time (receive mode)		f_{SCL} > 100 kHz, Client	51	-	56	
$t_{HD;DAT;tx}$	Data hold time (send mode)		f_{SCL} > 100 kHz, Client	71	90	138	

Downloaded from Arrow.com.

Table 41-56. I^2C Interface Timing (Device Variant B,C and D)

Symbol	Parameter		Conditions	Min.	Typ.	Max.	Units
t_R	Rise time for both SDA and SCL	Standard / Fast Mode	C_b(2) = 400pF	-	230	350	ns
		Fast Mode +	C_b(2) = 550pF		60	100	
		High Speed Mode	C_b(2) = 100pF		30	60	
t_{OF}	Output fall time from V_{IHmin} to V_{ILmax}	Standard / Fast Mode	10pF < C_b(2) < 400pF		25	50	
		Fast Mode +	10pF < C_b(2) < 550pF		20	30	
		High Speed Mode	10pF < C_b(2) < 100pF		10	20	
$t_{HD;STA}$	Hold time (repeated) START condition		f_{SCL} > 100 kHz, Host	t_{LOW}-9	-	-	
t_{LOW}	Low period of SCL Clock		f_{SCL} > 100 kHz	113	-	-	
t_{BUF}	Bus free time between a STOP and a START condition		f_{SCL} > 100 kHz	t_{LOW}	-	-	
$t_{SU;STA}$	Setup time for a repeated START condition		f_{SCL} > 100 kHz, Host	t_{LOW}+7	-	-	
$t_{HD;DAT}$	Data hold time		f_{SCL} > 100 kHz, Host	9	-	12	
$t_{SU;DAT}$	Data setup time		f_{SCL} > 100 kHz, Host	104	-	-	
$t_{SU;STO}$	Setup time for STOP condition		f_{SCL} > 100 kHz, Host	t_{LOW}+9	-	-	
$t_{SU;DAT;rx}$	Data setup time (receive mode)		f_{SCL} > 100 kHz, Client	51	-	56	
$t_{HD;DAT;tx}$	Data hold time (send mode)		f_{SCL} > 100 kHz, Client	71	90	138	

Notes:

1. These values are based on simulation. These values are not covered by test limits in production.
2. C_b = Capacitive load on each bus line. Otherwise noted, value of C_b set to 20pF.

Downloaded from Arrow.com.

41.15.4 SWD Timing

Figure 41-23. SWD Interface Signals

Read Cycle

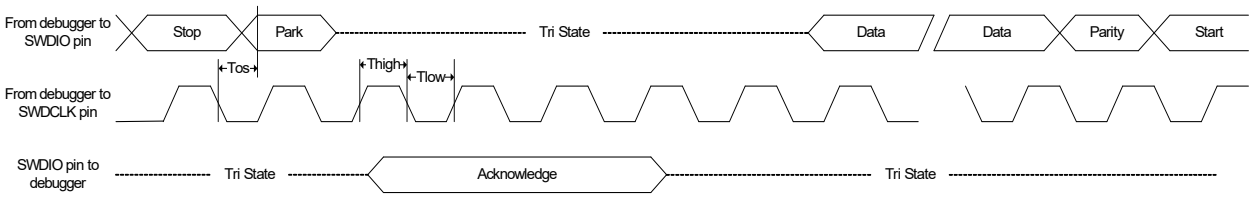

Write Cycle

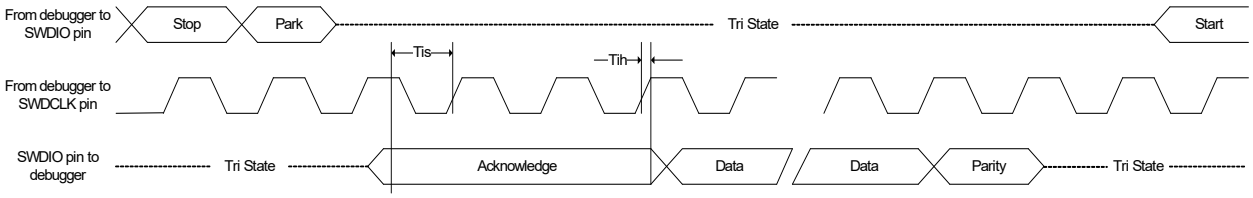

Table 41-57. SWD Timings(1)

Symbol	Parameter	Conditions	Min.	Max.	Units
T_{high}	SWDCLK High period	V_{VDDIO} from 3.0 V to 3.6 V, maximum external capacitor = 40 pF	10	500000	ns
T_{low}	SWDCLK Low period		10	500000	
T_{os}	SWDIO output skew to falling edge SWDCLK		-5	5	
T_{is}	Input Setup time required between SWDIO		4	-	
T_{ih}	Input Hold time required between SWDIO and rising edge SWDCLK		1	-	

Note: 1. These values are based on simulation. These values are not covered by test limits in production or characterization.

41.15.5 I²S Timing

Figure 41-24. I²S Timing Host Mode

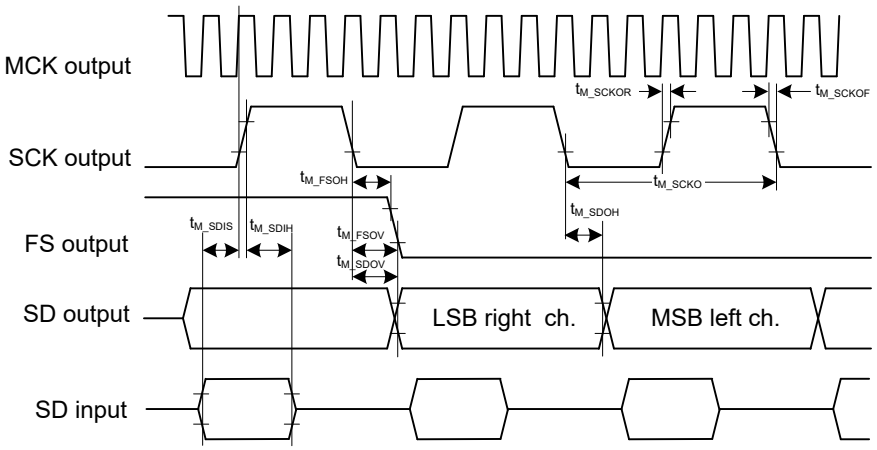

Downloaded from Arrow.com.

Figure 41-25. I²S Timing Client Mode

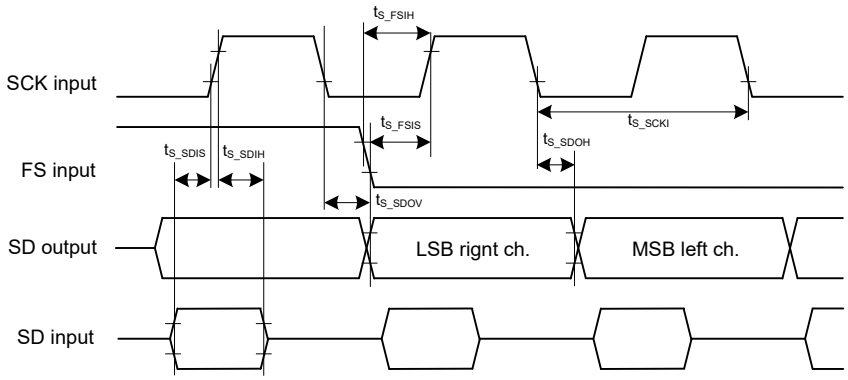

Figure 41-26. I²S Timing PDM2 Mode

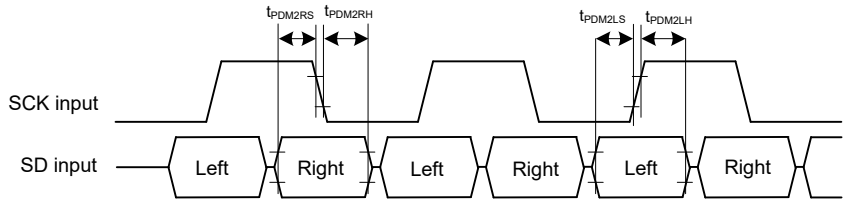

Table 41-58. I2S Timing Characteristics and Requirements (Device Variant A)

Name	Description	Mode	VDD=1.8V			VDD=3.3V			Units
			Min.	Typ.	Max	Min.	Typ.	Max.	
t_{M_MCKOR}	I2S MCK rise time(3)	Host mode / Capacitive load CL = 15 pF			9.2			4.7	ns
t_{M_MCKOF}	I2S MCK fall time(3)	Host mode / Capacitive load CL = 15 pF			11.5			5.3	ns
d_{M_MCKO}	I2S MCK duty cycle	Host mode	45.4		50	45.4		50	%
d_{M_MCKI}	I2S MCK duty cycle	Host mode, pin is input (1b)		50			50		%
t_{M_SCKOR}	I2S SCK rise time(3)	Host mode / Capacitive load CL = 15 pF			9			4.6	ns
t_{M_SCKOF}	I2S SCK fall time(3)	Host mode / Capacitive load CL = 15 pF			9.7			4.5	ns
d_{M_SCKO}	I2S SCK duty cycle	Host mode	45.6		50	45.6		50	%
f_{M_SCKO},1/ t_{M_SCKO}	I2S SCK frequency	Host mode,Supposing external device response delay is 30ns			8			9.5	MHz
f_{S_SCKI},1/ t_{S_SCKI}	I2S SCK frequency	Client mode,Supposing external device response delay is 30ns			14.4			14.8	MHz
d_{S_SCKO}	I2S SCK duty cycle	Client mode		50			50		%
t_{M_FSOV}	FS valid time	Host mode			4.1			4	ns
t_{M_FSOH}	FS hold time	Host mode	-0.9			-0.9			ns
t_{S_FSIS}	FS setup time	Client mode	2.3			1.5			ns
t_{S_FSIH}	FS hold time	Client mode	0			0			ns

Downloaded from Arrow.com.

.....continued

Name	Description	Mode	VDD=1.8V			VDD=3.3V			Units
			Min.	Typ.	Max	Min.	Typ.	Max.	
t_{M_SDIS}	Data input setup time	Host mode	34.7			24.5			ns
t_{M_SDIH}	Data input hold time	Host mode	-8.2			-8.2			ns
t_{S_SDIS}	Data input setup time	Client mode	4.6			3.9			ns
t_{S_SDIH}	Data input hold time	Client mode	1.2			1.2			ns
t_{M_SDOV}	Data output valid time	Host transmitter			5.6			4.8	ns
t_{M_SDOH}	Data output hold time	Host transmitter	-0.5			-0.5			ns
t_{S_SDOV}	Data output valid time	Client transmitter			36.2			25.9	ns
t_{S_SDOH}	Data output hold time	Client transmitter	36			25.7			ns
t_{PDM2LS}	Data input setup time	Host mode PDM2 Left	34.7			24.5			ns
t_{PDM2LH}	Data input hold time	Host mode PDM2 Left	-8.2			-8.2			ns
t_{PDM2RS}	Data input setup time	Host mode PDM2 Right	30.5			20.9			ns
t_{PDM2RH}	Data input hold time	Host mode PDM2 Right	-6.7			-6.7			ns

Table 41-59. I2S Timing Characteristics and Requirements (Device Variant B and C)

Name	Description	Mode	VDD=1.8V			VDD=3.3V			Units
			Min.	Typ.	Max.	Min.	Typ.	Max.	
t_{M_MCKOR}	I2S MCK rise time(3)	Host mode / Capacitive load CL = 15 pF			9.2			4.7	ns
t_{M_MCKOF}	I2S MCK fall time(3)	Host mode / Capacitive load CL = 15 pF			11.6			5.4	ns
d_{M_MCKO}	I2S MCK duty cycle	Host mode	47.1		50	47.3		50	%
d_{M_MCKI}	I2S MCK duty cycle	Host mode, pin is input (1b)		50			50		%
t_{M_SCKOR}	I2S SCK rise time(3)	Host mode / Capacitive load CL = 15 pF			9			4.6	ns
t_{M_SCKOF}	I2S SCK fall time(3)	Host mode / Capacitive load CL = 15 pF			9.7			4.6	ns
d_{M_SCKO}	I2S SCK duty cycle	Host mode	47		50	47.2		50	%
f_{M_SCKO}, 1/ t_{M_SCKO}	I2S SCK frequency	Host mode, Supposing external device response delay is 30ns			7.8			9.2	MHz
f_{S_SCKI}, $1/t_{S_SCKI}$	I2S SCK frequency	Client mode, Supposing external device response delay is 30ns			12.8			13	MHz
d_{S_SCKO}	I2S SCK duty cycle	Client mode		50			50		%
t_{M_FSOV}	FS valid time	Host mode			2.4			1.9	ns
t_{M_FSOH}	FS hold time	Host mode	-0.1			-0.1			ns
t_{S_FSIS}	FS setup time	Client mode	6			5.3			ns

Downloaded from Arrow.com.

.....continued

Name	Description	Mode	VDD=1.8V			VDD=3.3V			Units
			Min.	Typ.	Max.	Min.	Typ.	Max.	
t_{S_FSIH}	FS hold time	Client mode	0			0			ns
t_{M_SDIS}	Data input setup time	Host mode	36			25.9			ns
t_{M_SDIH}	Data input hold time	Host mode	-8.2			-8.2			ns
t_{S_SDIS}	Data input setup time	Client mode	9.1			8.3			ns
t_{S_SDIH}	Data input hold time	Client mode	3.8			3.7			ns
t_{M_SDOV}	Data output valid time	Host transmitter			2.5			1.9	ns
t_{M_SDOH}	Data output hold time	Host transmitter	-0.1			-0.1			ns
t_{S_SDOV}	Data output valid time	Client transmitter			29.8			19.7	ns
t_{S_SDOH}	Data output hold time	Client transmitter	29.1			18.9			ns
t_{PDM2LS}	Data input setup time	Host mode PDM2 Left	35.5			25.3			ns
t_{PDM2LH}	Data input hold time	Host mode PDM2 Left	-8.2			-8.2			ns
t_{PDM2RS}	Data input setup time	Host mode PDM2 Right	30.6			21.1			ns
t_{PDM2RH}	Data input hold time	Host mode PDM2 Right	-7			-7			ns

Notes:

1. All timing characteristics given for 15pF capacitive load.
2. These values are based on simulations and not covered by test limits in production.
3. See I/O Pin Characteristics.

Downloaded from Arrow.com.

42. Appendix A

42.1 SIL 2 Enabled Functional Safety Devices

Microchip offers IEC 61508 SIL 2-enabled devices which can utilize the self-test library available on request from Microchip Sales Office. The download includes the library binary, library user's manual, and user's checklist for integration of the library. Refer to the "Embex SIL 2 Library User's Manual" for additional information on using the IEC 61508 SIL 2-enabled Microchip devices.

Contact Microchip Sales Office for additional information on the IEC 61508 SIL 2-enabled devices, or to request a part number which is not shown in the following Ordering Information.

42.1.1 Ordering Information

The following tables list the IEC 61508 SIL-enabled devices which can utilize the SIL 2 certified self-test library (STL).

Table 42-1. SAM D21J

Ordering Code	FLASH (bytes)	SRAM (bytes)	Temperature Grade	Package	Carrier Type
ATSAMD21J18A-AU-SLL	256K	32K	-40°C to 85°C	TQFP64	Tray
ATSAMD21J18A-MU-SLL	256K	32K	-40°C to 85°C	QFN64	Tray

Table 42-2. SAM D21G

Ordering Code	FLASH (bytes)	SRAM (bytes)	Temperature Grade	Package	Carrier Type
ATSAMD21G18A-AU-SLL	256K	32K	-40°C to 85°C	TQFP48	Tray
ATSAMD21G18A-MU-SLL	256K	32K	-40°C to 85°C	QFN48	Tray

Table 42-3. SAM D21E

Ordering Code	FLASH(bytes)	SRAM (bytes)	Temperature Grade	Package	Carrier Type
ATSAMD21E18A-AU-SLL	256K	32K	-40°C to 85°C	TQFP32	Tray
ATSAMD21E18A-MU-SLL	256K	32K	-40°C to 85°C	QFN32	Tray
ATSAMD21E17D-MUT-SLL	128K	16K	-40°C to 85°C	QFN32	Tape & Reel
ATSAMD21E16B-MU-SLL	64K	8K	-40°C to 85°C	QFN32	Tray
ATSAMD21E16B-MUT-SLL	64K	8K	-40°C to 85°C	QFN32	Tape & Reel

© 2021 Microchip Technology Inc. and its subsidiaries

Downloaded from Arrow.com.

43. Appendix B

43.1 ISELED FULL License Enabled Functional Devices

Microchip offers ISELED full license enabled devices which can utilize the ISELED software stack and library available for download from the Microchip Website. Included in the download will be the ISELED stack source code file, header, the library binary, and the library user's manual. Refer to the Inova data sheet of the INLC10AQ (ISELED control commands; document AN-INLC_04;) For more information on Microchip's ISELED solutions, please visit the Microchip Website (www.microchip.com/iseled).

Contact the Microchip Sales Office for more details on the ISELED full license enabled devices, or to request a part number which is not available in the following Ordering Information.

43.2 Ordering Information

The following table lists the ISELED full license enabled devices, which can utilize the ISELED full license software stack and library.

Table 43-1. D21 ISELED Licensed Devices

Ordering Code	Flash (bytes)	SRAM (bytes)	Temperature Grade	Package	Carrier Type
D21J:					
ATSAMD21J18A-AZT510	256K	32K	-40°C to 125°C	TQFP64	Tape & Reel
ATSAMD21J18A-AZ510	256K	32K	-40°C to 125°C	TQFP64	Tray
D21G:					
ATSAMD21G18A-AZT510	256K	32K	-40°C to 125°C	TQFP48	Tape & Reel
ATSAMD21G18A-AZ510	256K	32K	-40°C to 125°C	TQFP48	Tray
D21E:					
ATSAMD21E18A-AZT510	256K	32K	-40°C to 125°C	TQFP32	Tape & Reel
ATSAMD21E18A-AZ510	256K	32K	-40°C to 125°C	TQFP32	Tray
ATSAMD21E16B-AZT510	64K	8K	-40°C to 125°C	TQFP32	Tape & Reel
ATSAMD21E16B -AZ510	64K	8K	-40°C to 125°C	TQFP32	Tray

Downloaded from Arrow.com.

44. Packaging Information

44.1 Package Drawings

Note: For current package drawings, refer to the Microchip Packaging Specification, which is available at http://www.microchip.com/packaging.

Downloaded from Arrow.com.

44.1.1 64-Pin TQFP

64-Lead Plastic Thin Quad Flatpack (PT)-10x10x1 mm Body, 2.00 mm Footprint [TQFP]

Note:	For the most current package drawings, please see the Microchip Packaging Specification located at http://www.microchip.com/packaging

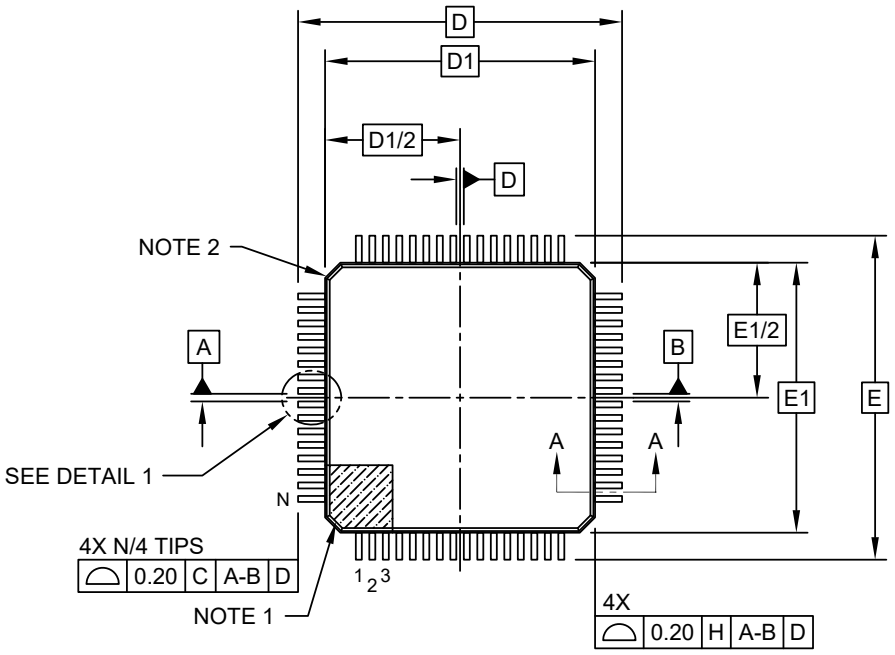

TOP VIEW

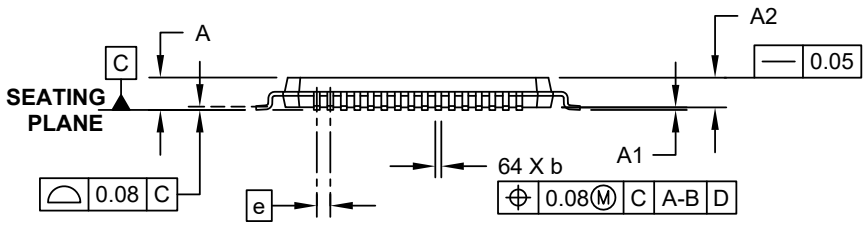

SIDE VIEW

Microchip Technology Drawing C04-085C Sheet 1 of 2

Downloaded from Arrow.com.

64-Lead Plastic Thin Quad Flatpack (PT)-10x10x1 mm Body, 2.00 mm Footprint [TQFP]

Note: For the most current package drawings, please see the Microchip Packaging Specification located at http://www.microchip.com/packaging

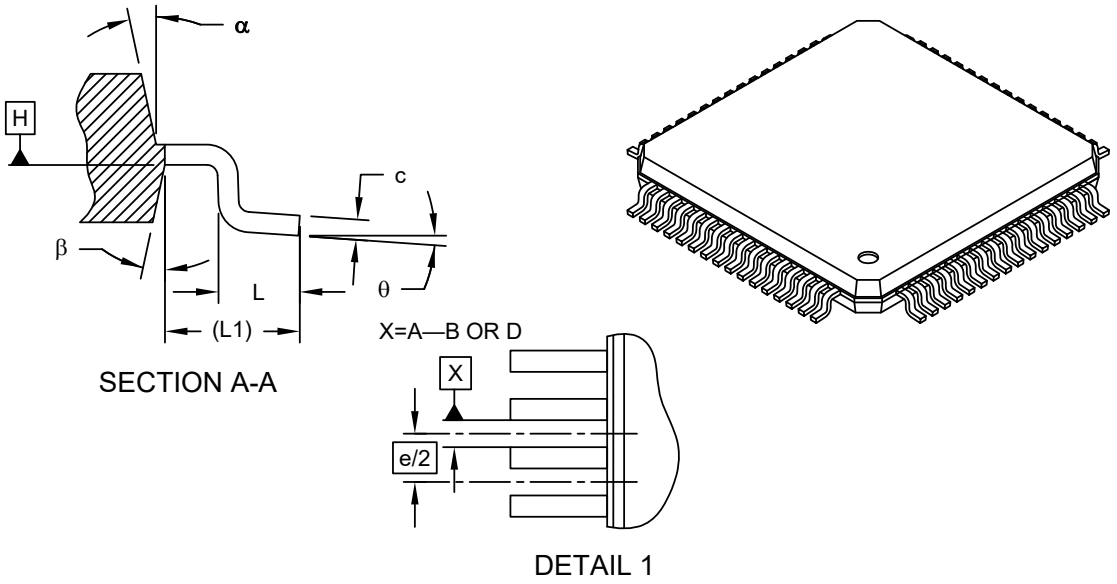

Units		MILLIMETERS		
Dimension Limits		MIN	NOM	MAX
Number of Leads	N		64	
Lead Pitch	e		0.50 BSC	
Overall Height	A	-	-	1.20
Molded Package Thickness	A2	0.95	1.00	1.05
Standoff	A1	0.05	-	0.15
Foot Length	L	0.45	0.60	0.75
Footprint	L1		1.00 REF	
Foot Angle	ϕ	0°	3.5°	7°
Overall Width	E		12.00 BSC	
Overall Length	D		12.00 BSC	
Molded Package Width	E1		10.00 BSC	
Molded Package Length	D1		10.00 BSC	
Lead Thickness	c	0.09	-	0.20
Lead Width	b	0.17	0.22	0.27
Mold Draft Angle Top	α	11°	12°	13°
Mold Draft Angle Bottom	β	11°	12°	13°

Notes:

1. Pin 1 visual index feature may vary, but must be located within the hatched area.
2. Chamfers at corners are optional; size may vary.
3. Dimensions D1 and E1 do not include mold flash or protrusions. Mold flash or protrusions shall not exceed 0.25mm per side.
4. Dimensioning and tolerancing per ASME Y14.5M

BSC: Basic Dimension. Theoretically exact value shown without tolerances.
REF: Reference Dimension, usually without tolerance, for information purposes only.

Microchip Technology Drawing C04-085C Sheet 2 of 2

Downloaded from Arrow.com.

64-Lead Plastic Thin Quad Flatpack (PT)-10x10x1 mm Body, 2.00 mm Footprint [TQFP]

Note: For the most current package drawings, please see the Microchip Packaging Specification located at http://www.microchip.com/packaging

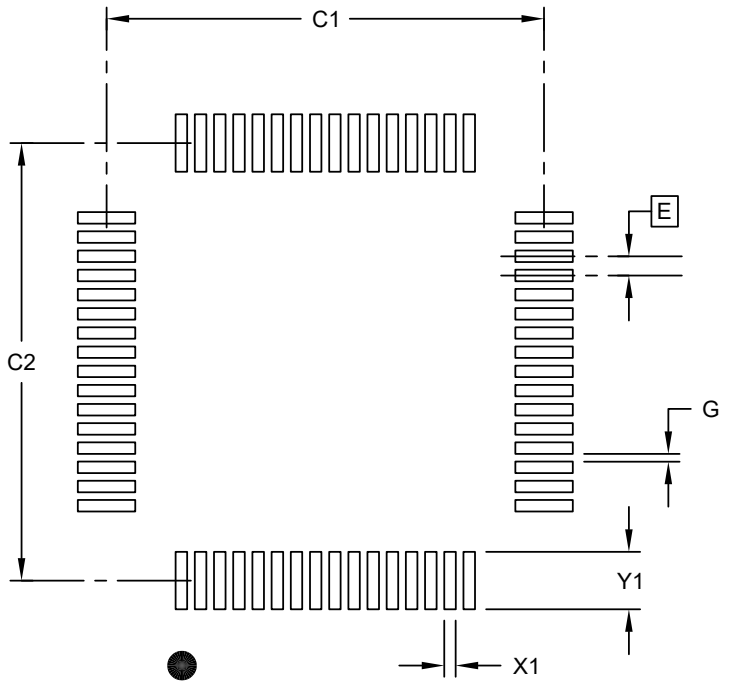

RECOMMENDED LAND PATTERN

Units		MILLIMETERS		
Dimension Limits		MIN	NOM	MAX
Contact Pitch	E	0.50 BSC		
Contact Pad Spacing	C1		11.40	
Contact Pad Spacing	C2		11.40	
Contact Pad Width (X28)	X1			0.30
Contact Pad Length (X28)	Y1			1.50
Distance Between Pads	G	0.20		

Notes:

1. Dimensioning and tolerancing per ASME Y14.5M

BSC: Basic Dimension. Theoretically exact value shown without tolerances.

Microchip Technology Drawing C04-2085B Sheet 1 of 1

Table 44-1. Device and Package Maximum Weight

300	mg

Downloaded from Arrow.com.

Table 44-2. Package Reference

Package Outline Drawing MCHP reference	C04-085
JESD97 Classification	E3

© 2021 Microchip Technology Inc. and its subsidiaries

Downloaded from Arrow.com.

44.1.2 64-Pin VQFN

64-Lead Very Thin Plastic Quad Flat, No Lead Package (TMB) - 9x9 mm Body [VQFN]
Atmel Legacy Global Package Code ZST

Note:	For the most current package drawings, please see the Microchip Packaging Specification located at http://www.microchip.com/packaging

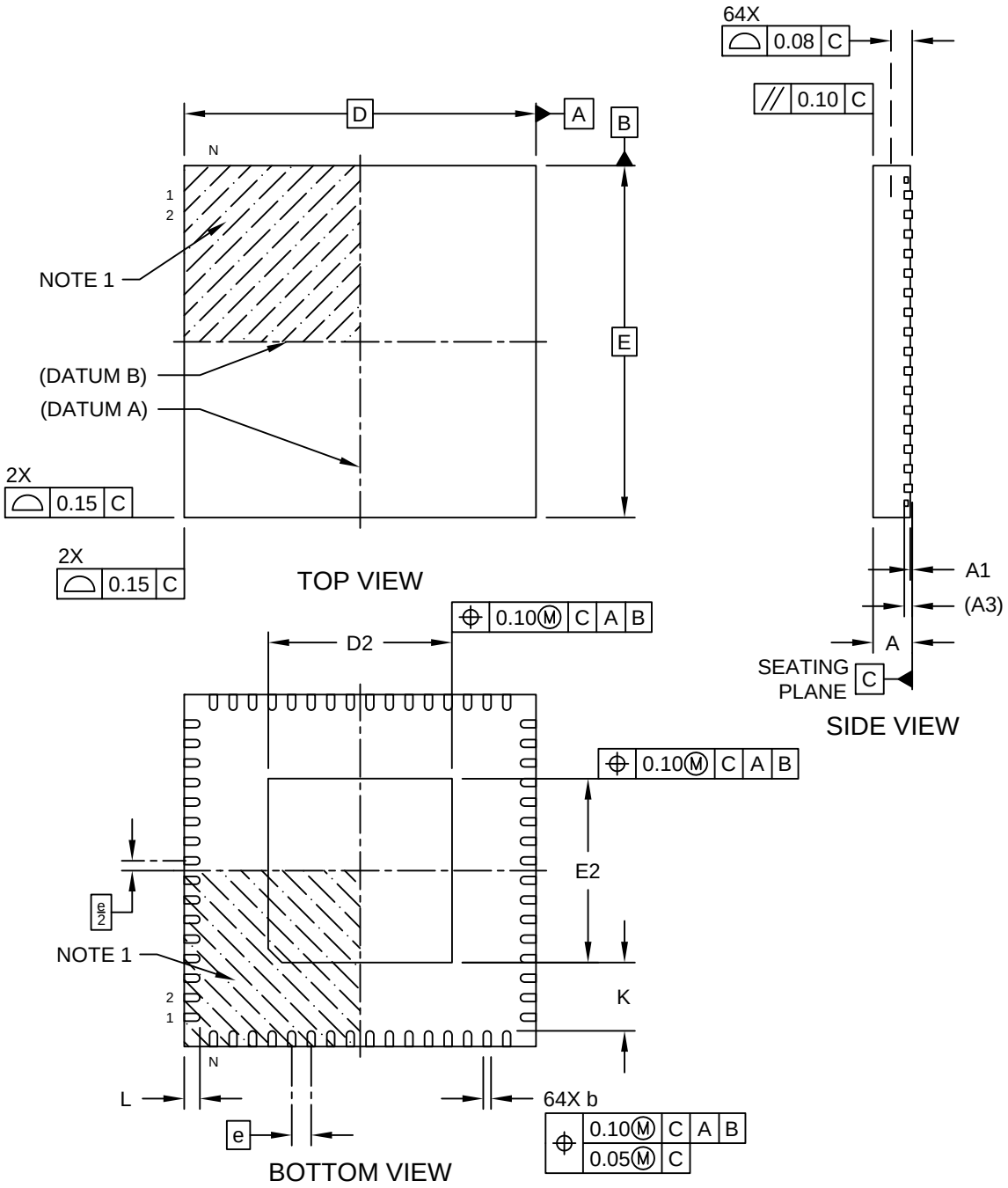

Microchip Technology Drawing C04-21441-TMB Rev A Sheet 1 of 2

Downloaded from Arrow.com.

64-Lead Very Thin Plastic Quad Flat, No Lead Package (TMB) - 9x9 mm Body [VQFN]
Atmel Legacy Global Package Code ZST

Note: For the most current package drawings, please see the Microchip Packaging Specification located at http://www.microchip.com/packaging

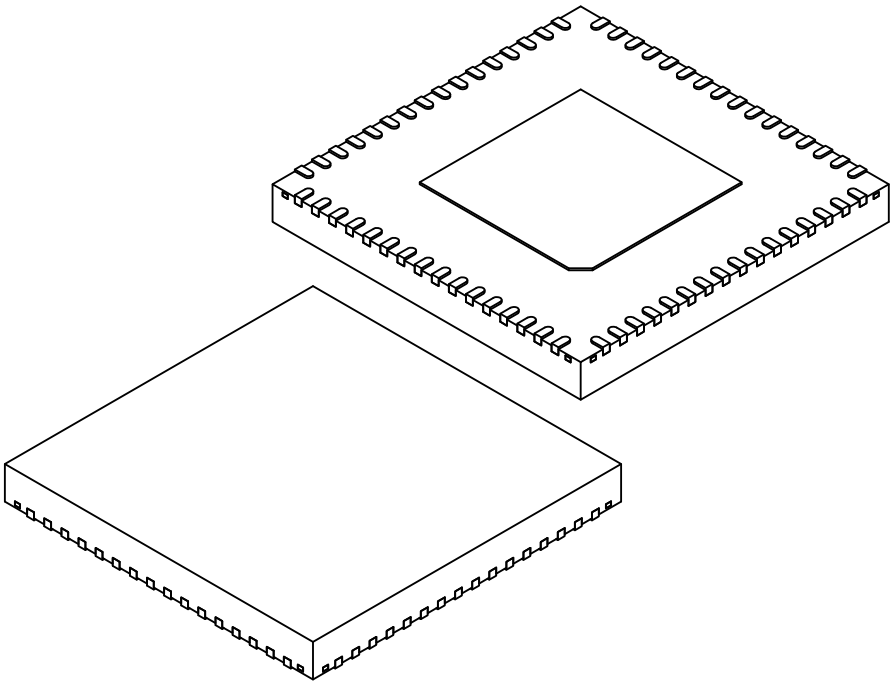

Units		MILLIMETERS		
Dimension Limits		MIN	NOM	MAX
Number of Terminals	N		64	
Pitch	e		0.50 BSC	
Overall Height	A	0.80	0.90	1.00
Standoff	A1	0.00	0.02	0.05
Terminal Thickness	A3		0.203 REF	
Overall Length	D		9.00 BSC	
Exposed Pad Length	D2	4.60	4.70	4.80
Overall Width	E		9.00 BSC	
Exposed Pad Width	E2	4.60	4.70	4.80
Terminal Width	b	0.15	0.20	0.25
Terminal Length	L	0.30	0.40	0.55
Terminal-to-Exposed-Pad	K	0.20	-	-

Notes:

1. Pin 1 visual index feature may vary, but must be located within the hatched area.
2. Package is saw singulated
3. Dimensioning and tolerancing per ASME Y14.5M
   BSC: Basic Dimension. Theoretically exact value shown without tolerances.
   REF: Reference Dimension, usually without tolerance, for information purposes only.

Microchip Technology Drawing C04-21441-TMB Rev A Sheet 2 of 2

Downloaded from Arrow.com.

64-Lead Very Thin Plastic Quad Flat, No Lead Package (TMB) - 9x9 mm Body [VQFN]
Atmel Legacy Global Package Code ZST

Note: For the most current package drawings, please see the Microchip Packaging Specification located at http://www.microchip.com/packaging

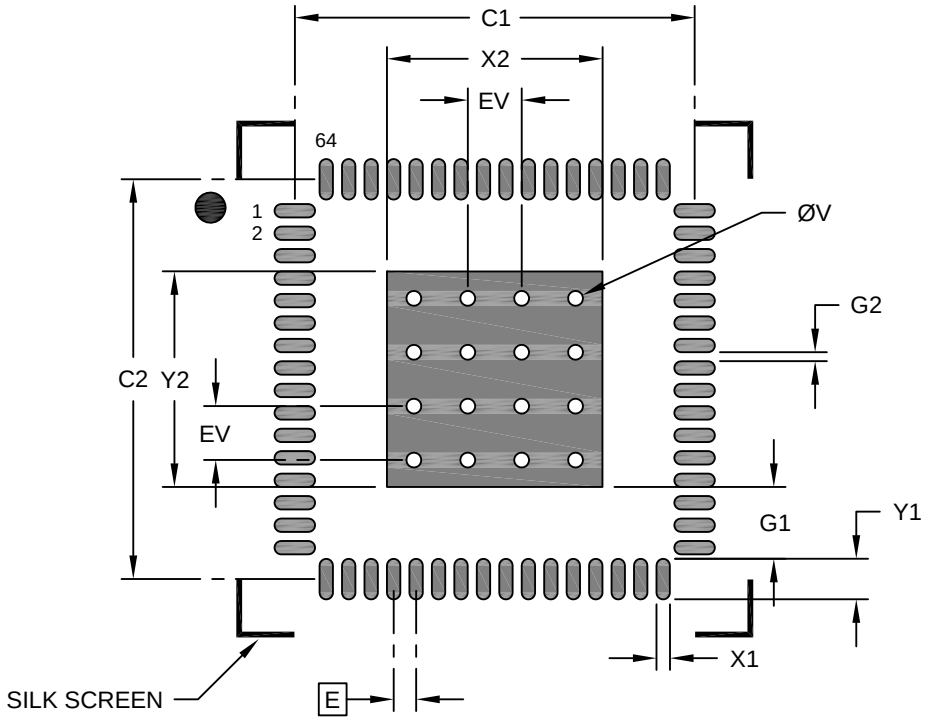

RECOMMENDED LAND PATTERN

Units		MILLIMETERS		
Dimension Limits		MIN	NOM	MAX
Contact Pitch	E		0.50 BSC	
Optional Center Pad Width	X2			4.80
Optional Center Pad Length	Y2			4.80
Contact Pad Spacing	C1		8.90	
Contact Pad Spacing	C2		8.90	
Contact Pad Width (X64)	X1			0.30
Contact Pad Length (X64)	Y1			0.90
Contact Pad to Center Pad (X64)	G1	1.60		
Contact Pad to Contact Pad (X60)	G2	0.20		
Thermal Via Diameter	V		0.30	
Thermal Via Pitch	EV		1.00	

Notes:

1. Dimensioning and tolerancing per ASME Y14.5M
   BSC: Basic Dimension. Theoretically exact value shown without tolerances.
2. For best soldering results, thermal vias, if used, should be filled or tented to avoid solder loss during reflow process

Microchip Technology Drawing C04-21441-TMB Rev A Sheet 1 of 2

Note: The exposed die attach pad is not connected electrically inside the device. It is recommenced to attach (solder) the exposed pad to a matching perimeter landing beneath the package punctuated with vias to the ground layer.

Downloaded from Arrow.com.

Table 44-3. Device and Package Maximum Weight

200	mg

Table 44-4. Package Reference

Package Outline Drawing MCHP reference	C04-21441
JESD97 Classification	E3

Downloaded from Arrow.com.

44.1.3 64-Lead QFN with Sawn Wettable Flanks

64-Lead Very Thin Plastic Quad Flat, No Lead Package (U6B) - 9x9 mm Body [VQFN] With 4.7 mm Exposed Pad and Stepped Wettable Flanks; Atmel Legacy ZRB

Note:	For the most current package drawings, please see the Microchip Packaging Specification located at http://www.microchip.com/packaging

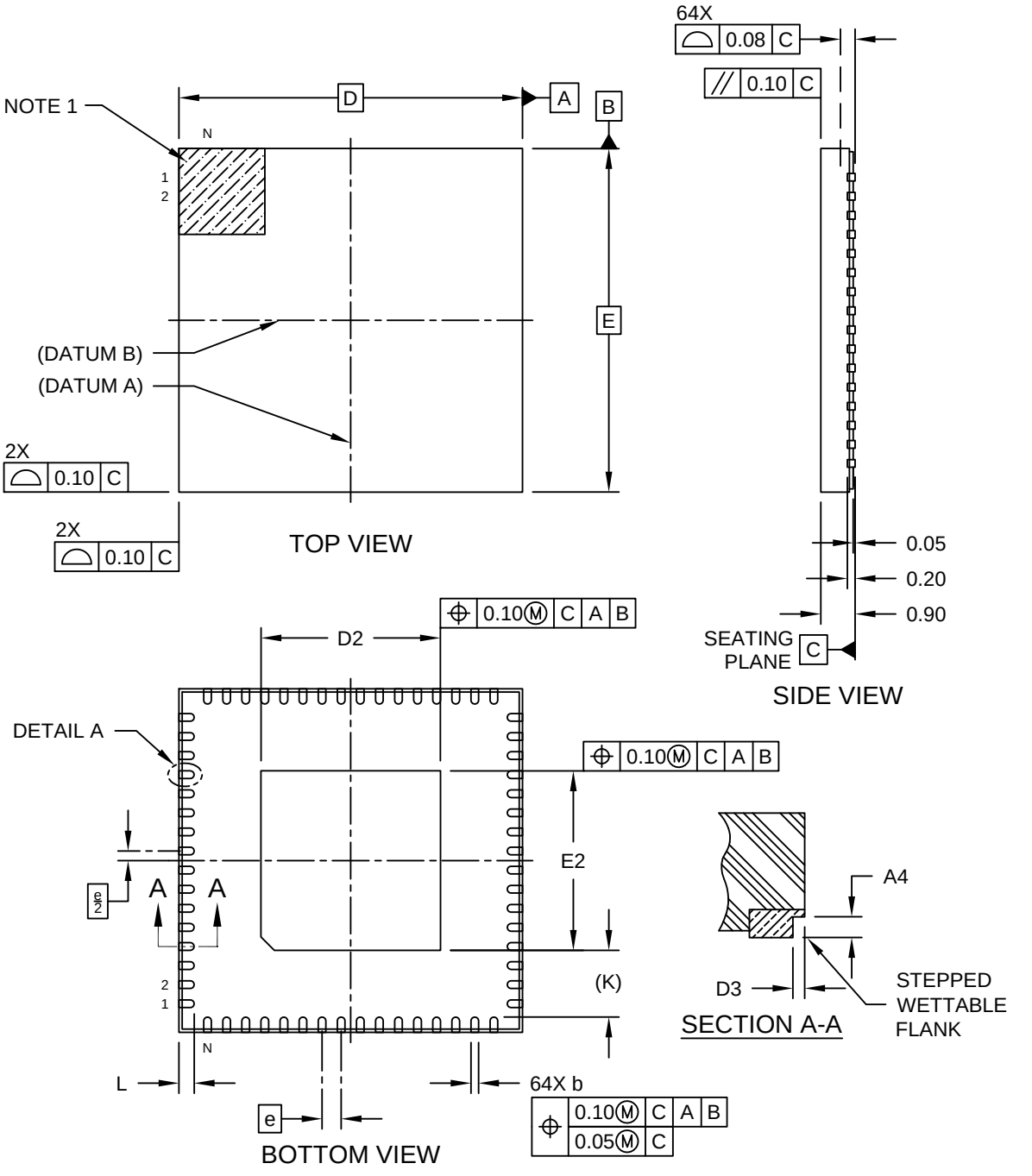

Microchip Technology Drawing C04-21497 Rev A Sheet 1 of 2

Downloaded from Arrow.com.

64-Lead Very Thin Plastic Quad Flat, No Lead Package (U6B) - 9x9 mm Body [VQFN] With 4.7 mm Exposed Pad and Stepped Wettable Flanks; Atmel Legacy ZRB

Note: For the most current package drawings, please see the Microchip Packaging Specification located at http://www.microchip.com/packaging

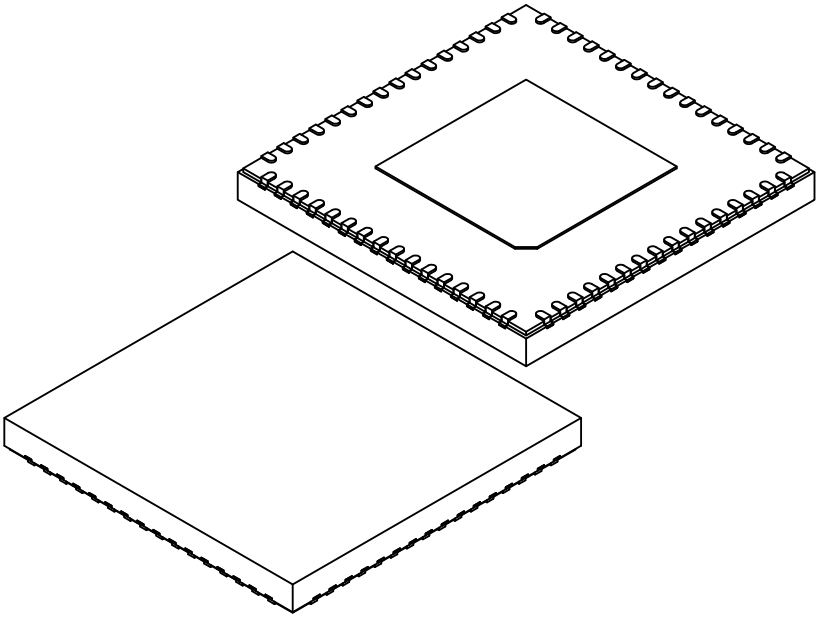

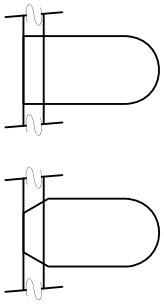

DETAIL 1
ALTERNATE TERMINAL CONFIGURATIONS

Units		MILLIMETERS		
Dimension Limits		MIN	NOM	MAX
Number of Terminals	N		64	
Pitch	e		0.50 BSC	
Overall Height	A	0.80	0.85	0.90
Standoff	A1	0.00	0.035	0.05
Terminal Thickness	A3		0.203 REF	
Overall Length	D		9.00 BSC	
Exposed Pad Length	D2	4.60	4.70	4.80
Overall Width	E		9.00 BSC	
Exposed Pad Width	E2	4.60	4.70	4.80
Terminal Width	b	0.15	0.20	0.25
Terminal Length	L	0.35	0.40	0.45
Terminal-to-Exposed-Pad	K		1.75 REF	
Wettable Flank Step Length	D3	-	-	0.085
Wettable Flank Step Height	A4	0.10	-	0.19

Notes:

1. Pin 1 visual index feature may vary, but must be located within the hatched area.
2. Package is saw singulated
3. Dimensioning and tolerancing per ASME Y14.5M
   BSC: Basic Dimension. Theoretically exact value shown without tolerances.
   REF: Reference Dimension, usually without tolerance, for information purposes only.

Microchip Technology Drawing C04-21497 Rev A Sheet 1 of 2

Downloaded from Arrow.com.

64-Lead Very Thin Plastic Quad Flat, No Lead Package (U6B) - 9x9 mm Body [VQFN] With 4.7 mm Exposed Pad and Stepped Wettable Flanks; Atmel Legacy ZRB

Note: For the most current package drawings, please see the Microchip Packaging Specification located at http://www.microchip.com/packaging

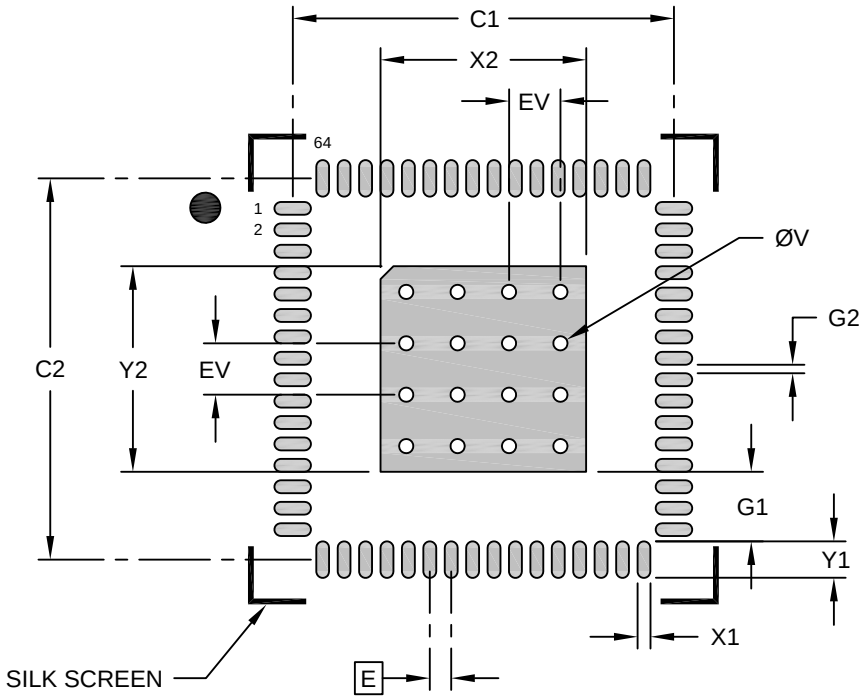

RECOMMENDED LAND PATTERN

Units		MILLIMETERS		
Dimension Limits		MIN	NOM	MAX
Contact Pitch	E		0.50 BSC	
Optional Center Pad Width	X2			4.80
Optional Center Pad Length	Y2			4.80
Contact Pad Spacing	C1		8.90	
Contact Pad Spacing	C2		8.90	
Contact Pad Width (X64)	X1			0.30
Contact Pad Length (X64)	Y1			0.85
Contact Pad to Center Pad (X64)	G1	1.63		
Contact Pad to Contact Pad (X60)	G2	0.20		
Thermal Via Diameter	V		0.33	
Thermal Via Pitch	EV		1.20	

Notes:

1. Dimensioning and tolerancing per ASME Y14.5M
   BSC: Basic Dimension. Theoretically exact value shown without tolerances.
2. For best soldering results, thermal vias, if used, should be filled or tented to avoid solder loss during reflow process

Microchip Technology Drawing C04-23497 Rev A

Table 44-5. Device and Package Maximum Weight

200	mg

Downloaded from Arrow.com.

Table 44-6. Package Reference

JEDEC Drawing Reference	C04-21497
JESD97 Classification	E3

Note: For the most current package drawings, please see the Microchip Packaging Specification located at http://www.microchip.com/packaging.

Downloaded from Arrow.com.

44.1.4 64-Pin VQFN

64-Lead Very Thin Plastic Quad Flat, No Lead Package (5LX) - 9x9x1.0 mm Body [VQFN] With 5.4 mm Exposed Pad and Stepped Wettable Flanks

Note:	For the most current package drawings, please see the Microchip Packaging Specification located at http://www.microchip.com/packaging

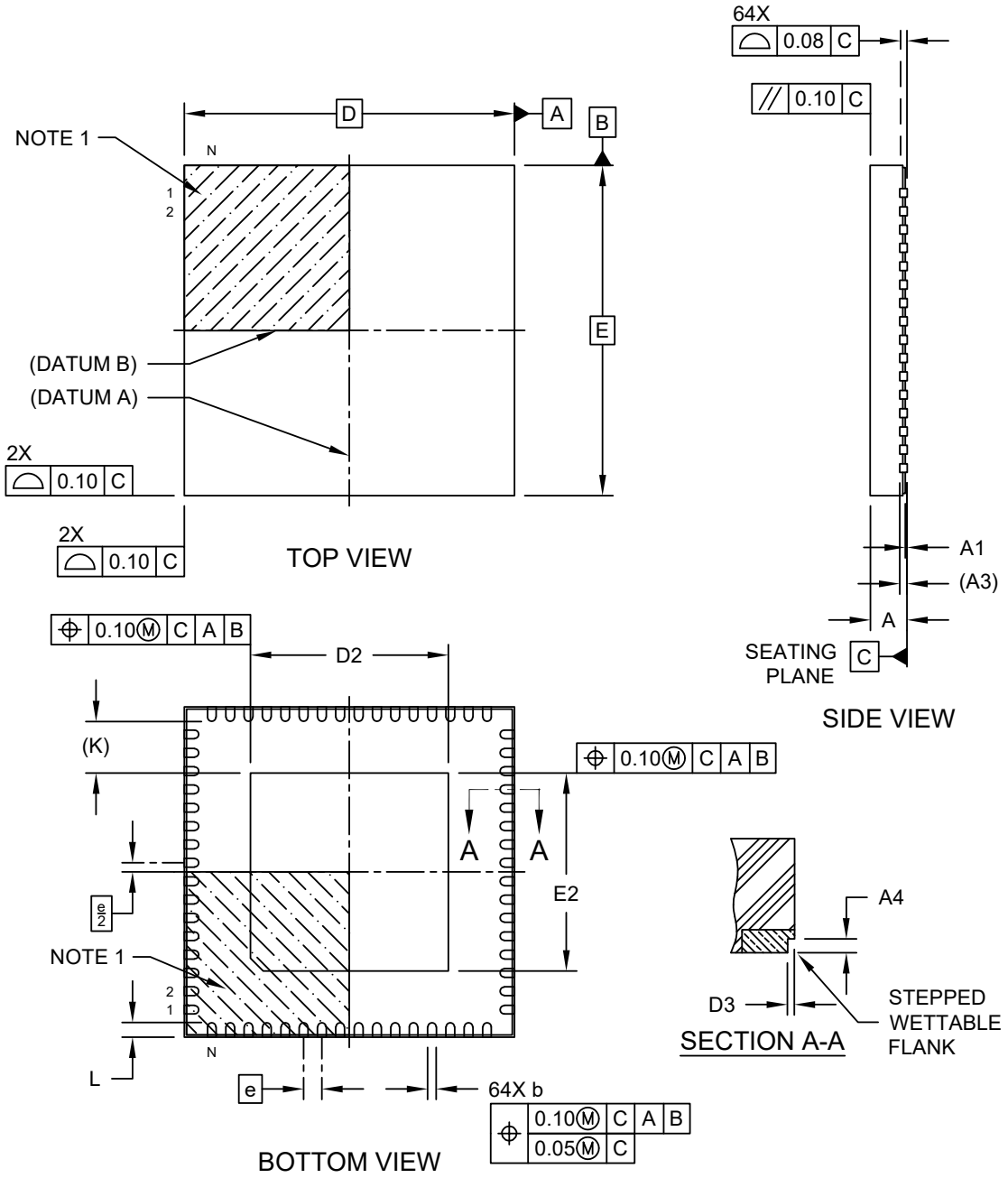

Microchip Technology Drawing C04-483 Rev E Sheet 1 of 2

Downloaded from Arrow.com.

64-Lead Very Thin Plastic Quad Flat, No Lead Package (5LX) - 9x9x1.0 mm Body [VQFN] With 5.4 mm Exposed Pad and Stepped Wettable Flanks

Note: For the most current package drawings, please see the Microchip Packaging Specification located at http://www.microchip.com/packaging

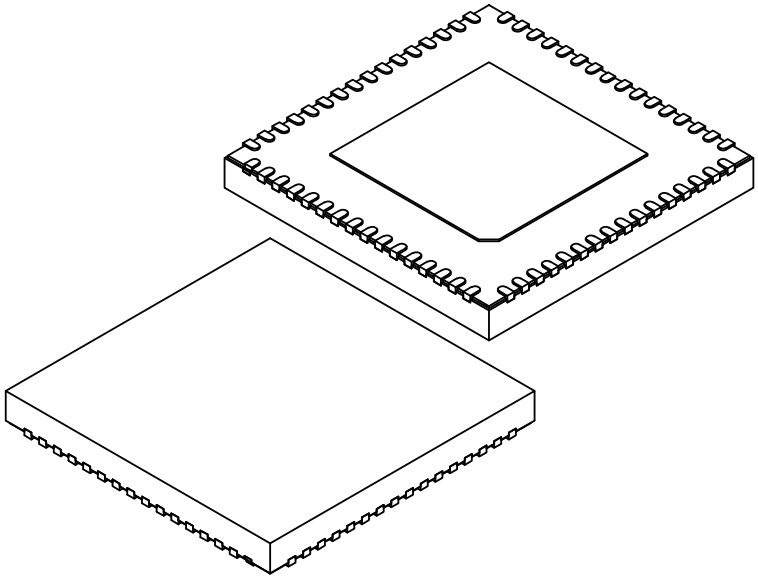

Units		MILLIMETERS		
Dimension Limits		MIN	NOM	MAX
Number of Terminals	N		64	
Pitch	e		0.50 BSC	
Overall Height	A	0.80	0.90	1.00
Standoff	A1	0.00	0.02	0.05
Terminal Thickness	A3		0.203 REF	
Overall Length	D		9.00 BSC	
Exposed Pad Length	D2	5.30	5.40	5.50
Overall Width	E		9.00 BSC	
Exposed Pad Width	E2	5.30	5.40	5.50
Terminal Width	b	0.20	0.25	0.30
Terminal Length	L	0.30	0.40	0.50
Terminal-to-Exposed-Pad	K		1.40 REF	
Wettable Flank Step Length	D3	0.035	0.060	0.085
Wettable Flank Step Height	A4	0.10	-	0.19

Notes:

1. Pin 1 visual index feature may vary, but must be located within the hatched area.
2. Package is saw singulated
3. Dimensioning and tolerancing per ASME Y14.5M
   BSC: Basic Dimension. Theoretically exact value shown without tolerances.
   REF: Reference Dimension, usually without tolerance, for information purposes only.

Microchip Technology Drawing C04-483 Rev E Sheet 2 of 2

Downloaded from Arrow.com.

64-Lead Very Thin Plastic Quad Flat, No Lead Package (5LX) - 9x9x1.0 mm Body [VQFN] With 5.4 mm Exposed Pad and Stepped Wettable Flanks

Note: For the most current package drawings, please see the Microchip Packaging Specification located at http://www.microchip.com/packaging

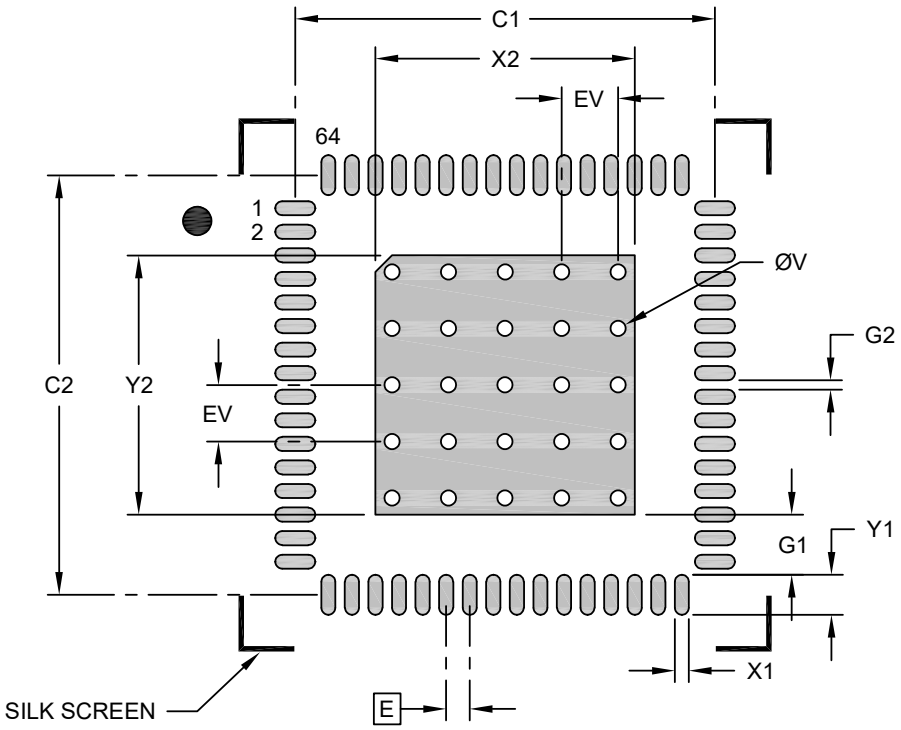

RECOMMENDED LAND PATTERN

Units		MILLIMETERS		
Dimension Limits		MIN	NOM	MAX
Contact Pitch	E	0.50 BSC		
Optional Center Pad Width	X2			5.50
Optional Center Pad Length	Y2			5.50
Contact Pad Spacing	C1		8.90	
Contact Pad Spacing	C2		8.90	
Contact Pad Width (X64)	X1			0.30
Contact Pad Length (X64)	Y1			0.85
Contact Pad to Center Pad (X64)	G1	1.28		
Contact Pad to Contact Pad (X60)	G2	0.20		
Thermal Via Diameter	V		0.33	
Thermal Via Pitch	EV		1.20	

Notes:

1. Dimensioning and tolerancing per ASME Y14.5M
   BSC: Basic Dimension. Theoretically exact value shown without tolerances.
2. For best soldering results, thermal vias, if used, should be filled or tented to avoid solder loss during reflow process

Microchip Technology Drawing C04-2483 Rev E

Table 44-7. Device and Package Maximum Weight

232.4	mg

Downloaded from Arrow.com.

Table 44-8. Package Reference

Package Outline Drawing MCHP reference	C04-00483
JESD97 Classification	E3

Downloaded from Arrow.com.

44.1.5 64-ball UFBGA

64-Ball Ultra Thin Fine-Pitch Ball Grid Array Package (BQB) - 5x5x0.65 mm Body [UFBGA]; Atmel Legacy Global Package Code CAH

Note:	For the most current package drawings, please see the Microchip Packaging Specification located at http://www.microchip.com/packaging

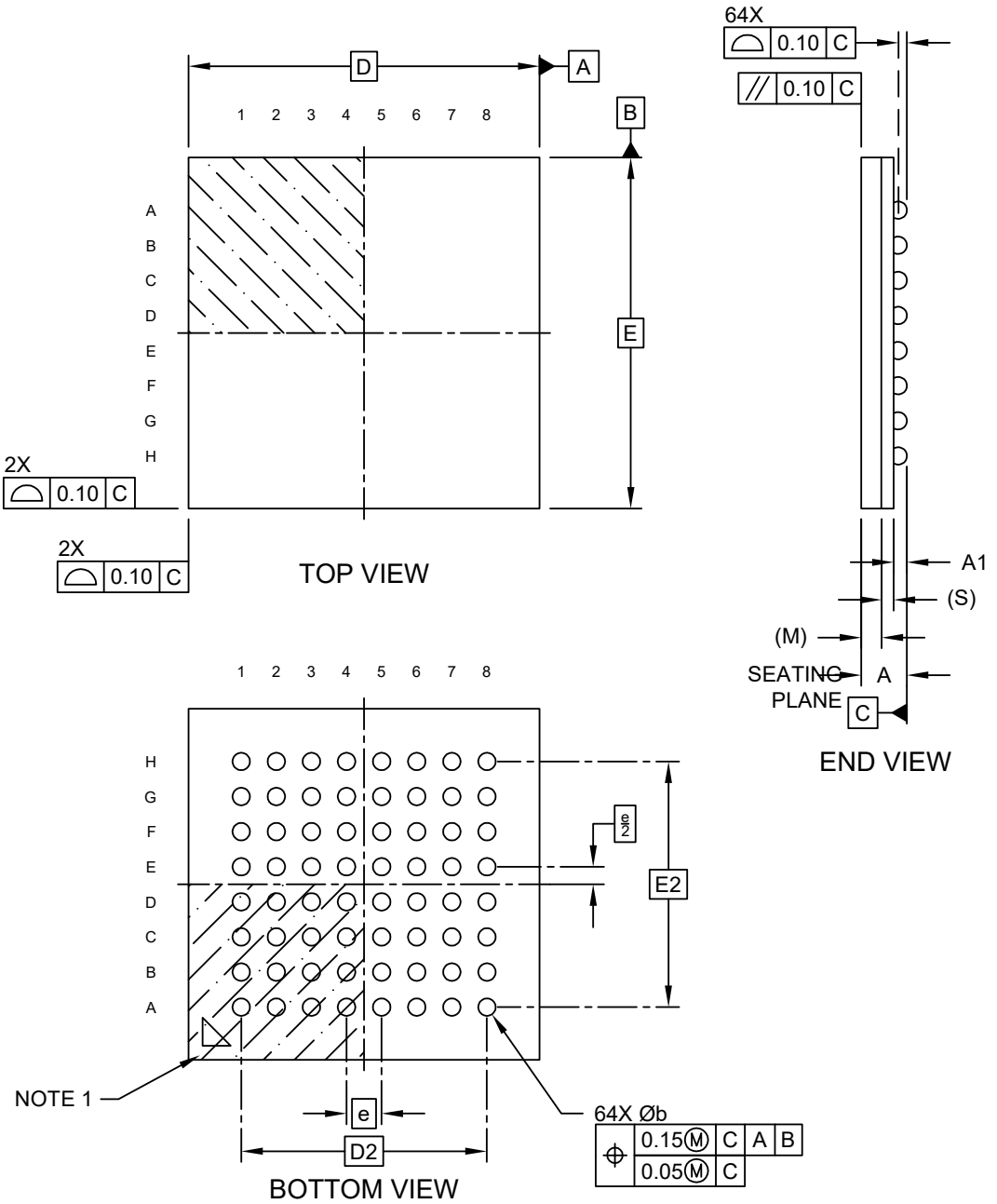

Microchip Technology Drawing C04-21153 Rev A Sheet 1 of 2

Downloaded from Arrow.com.

64-Ball Ultra Thin Fine-Pitch Ball Grid Array Package (BQB) - 5x5x0.65 mm Body [UFBGA]; Atmel Legacy Global Package Code CAH

Note: For the most current package drawings, please see the Microchip Packaging Specification located at http://www.microchip.com/packaging

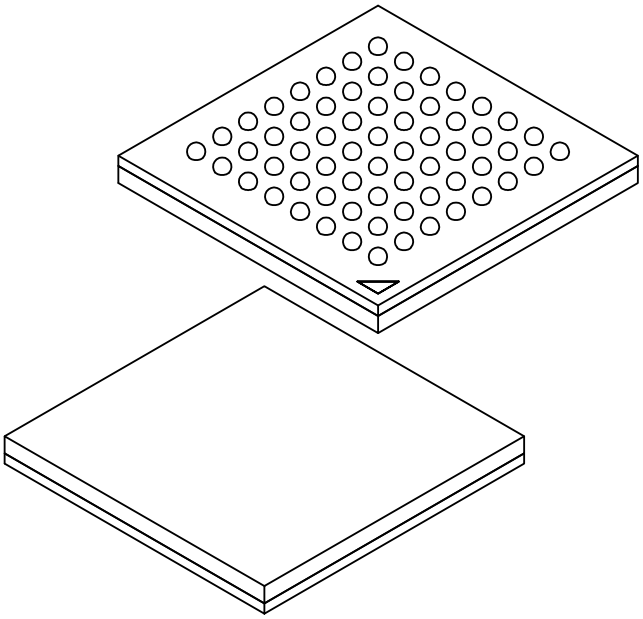

Units		MILLIMETERS		
Dimension Limits		MIN	NOM	MAX
Number of Terminals	N		64	
Pitch	e		0.50 BSC	
Overall Height	A	–	–	0.65
Ball Height	A1	0.14	0.19	0.24
Mold Thickness	M		0.25 REF	
Substrate Thickness	S		1.36 REF	
Overall Length	D		5.00 BSC	
Ball Array Length	D2		3.50 BSC	
Overall Width	E		5.00 BSC	
Ball Array Width	E2		3.50 BSC	
Ball Width	b	0.20	0.25	0.3

Notes:

1. Pin 1 visual index feature may vary, but must be located within the hatched area.
2. Dimensioning and tolerancing per ASME Y14.5M
   BSC: Basic Dimension. Theoretically exact value shown without tolerances.
   REF: Reference Dimension, usually without tolerance, for information purposes only.

Microchip Technology Drawing C04-21153 Rev A Sheet 2 of 2

Downloaded from Arrow.com.

64-Ball Ultra Thin Fine-Pitch Ball Grid Array Package (BQB) - 5x5x0.65 mm Body [UFBGA]; Atmel Legacy Global Package Code CAH

Note: For the most current package drawings, please see the Microchip Packaging Specification located at http://www.microchip.com/packaging

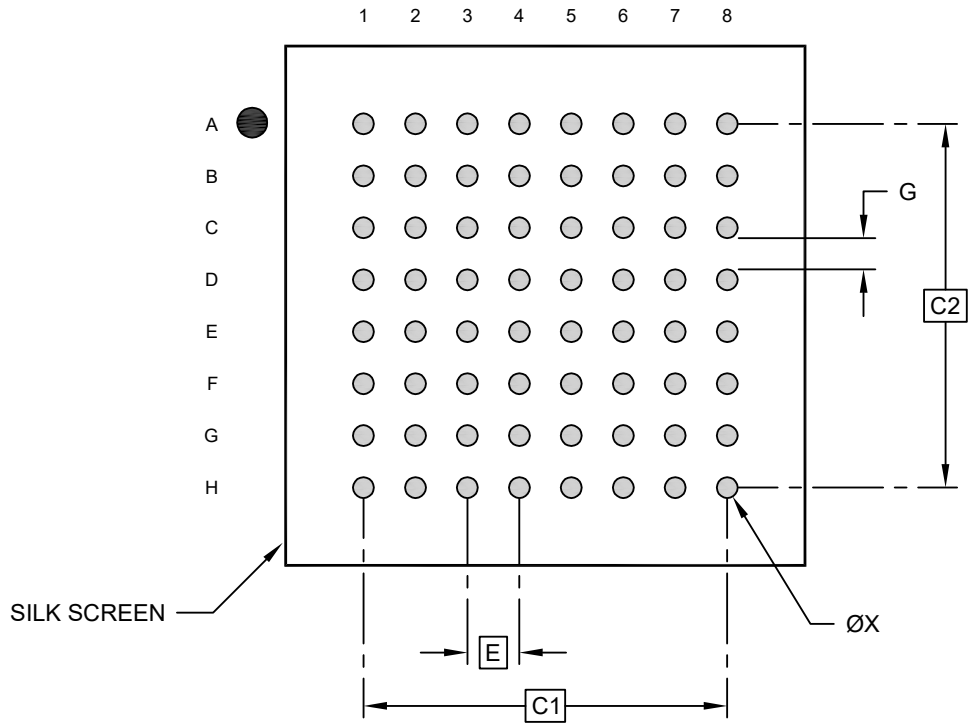

RECOMMENDED LAND PATTERN

Units		MILLIMETERS		
Dimension Limits		MIN	NOM	MAX
Contact Pitch	E		0.50 BSC	
Contact Pad Spacing	C1		3.50 BSC	
Contact Pad Spacing	C2		3.50 BSC	
Contact Pad Width (Xnn)	X			0.20
Contact Pad to Contact Pad (Xnn)	G	0.30		

Notes:

1. Dimensioning and tolerancing per ASME Y14.5M

   BSC: Basic Dimension. Theoretically exact value shown without tolerances.

Microchip Technology Drawing C04-23153 Rev A

Downloaded from Arrow.com.

Table 44-9. Device and Package Maximum Weight

27.4	mg

Table 44-10. Package Reference

Package Outline Drawing MCHP reference	C04-21153
JESD97 Classification	E8

Downloaded from Arrow.com.

44.1.6 48-Pin TQFP

48-Lead Plastic Thin Quad Flatpack (Y8) - 7x7x1.0 mm Body [TQFP]

Note:	For the most current package drawings, please see the Microchip Packaging Specification located at http://www.microchip.com/packaging

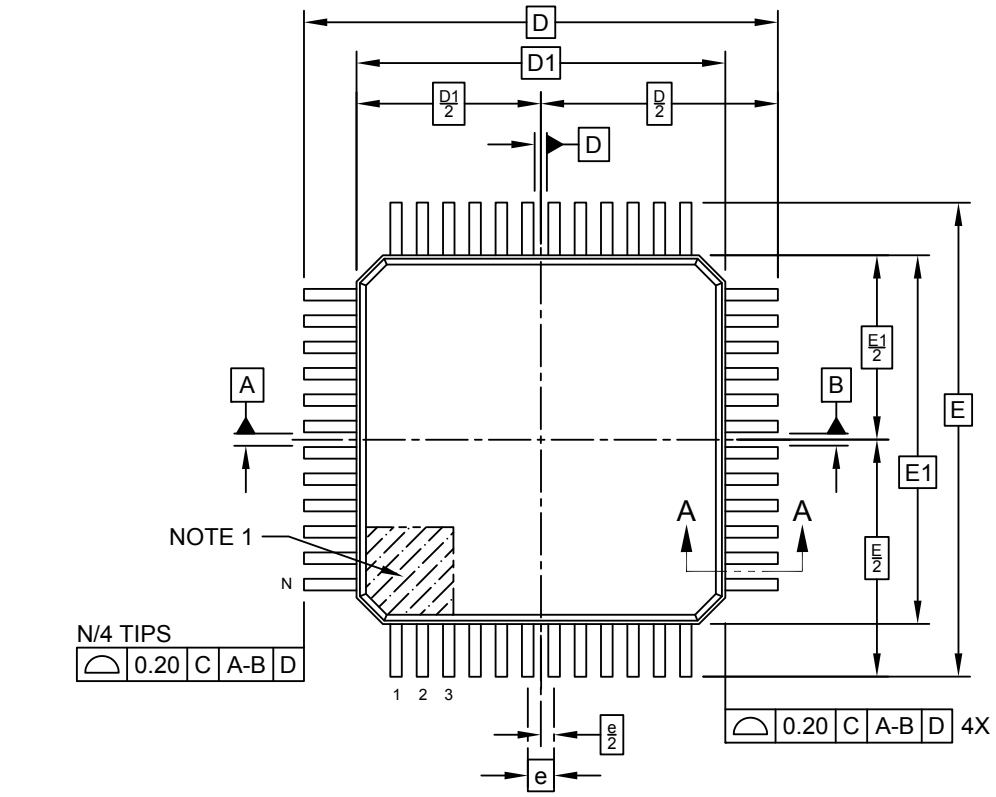

TOP VIEW

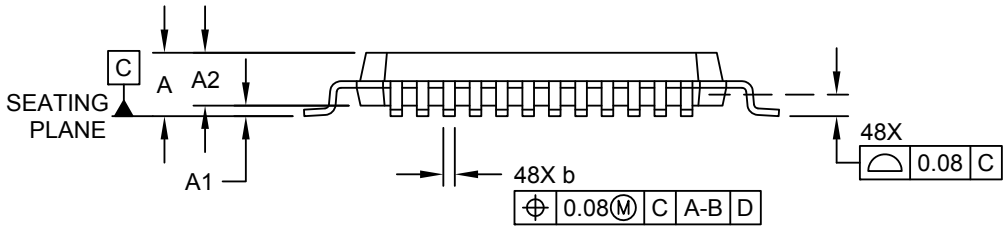

SIDE VIEW

Microchip Technology Drawing C04-300-Y8 Rev D Sheet 1 of 2

Downloaded from Arrow.com.

48-Lead Plastic Thin Quad Flatpack (Y8) - 7x7x1.0 mm Body [TQFP]

Note: For the most current package drawings, please see the Microchip Packaging Specification located at http://www.microchip.com/packaging

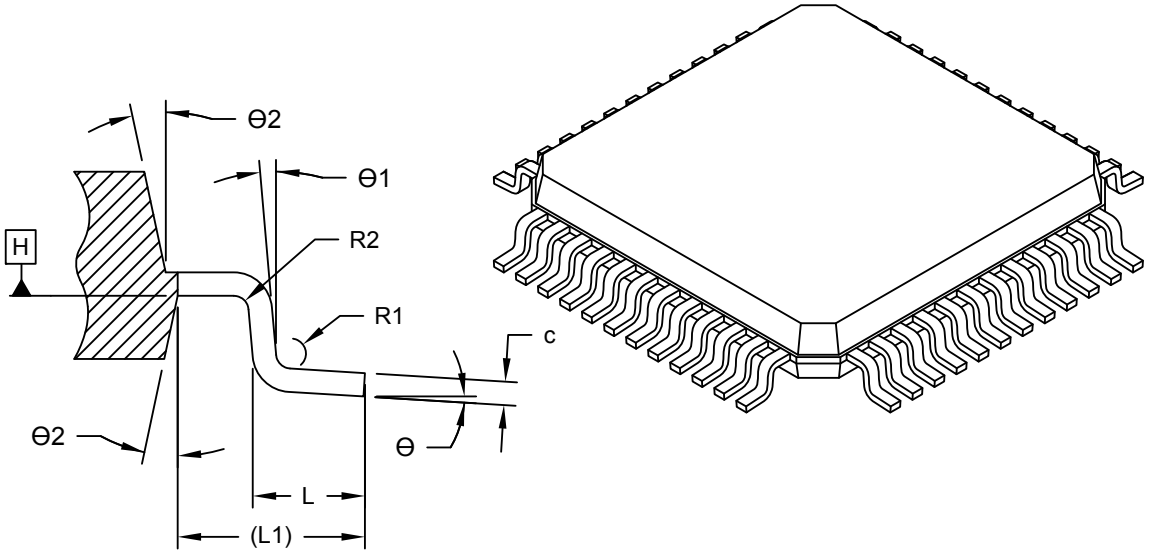

SECTION A-A

Units		MILLIMETERS		
Dimension Limits		MIN	NOM	MAX
Number of Terminals	N		48	
Pitch	e		0.50 BSC	
Overall Height	A	-	-	1.20
Standoff	A1	0.05	-	0.15
Molded Package Thickness	A2	0.95	1.00	1.05
Overall Length	D		9.00 BSC	
Molded Package Length	D1		7.00 BSC	
Overall Width	E		9.00 BSC	
Molded Package Width	E1		7.00 BSC	
Terminal Width	b	0.17	0.22	0.27
Terminal Thickness	c	0.09	-	0.16
Terminal Length	L	0.45	0.60	0.75
Footprint	L1		1.00 REF	
Lead Bend Radius	R1	0.08	-	-
Lead Bend Radius	R2	0.08	-	0.20
Foot Angle	Θ	0°	3.5°	7°
Lead Angle	Θ1	0°	-	-
Mold Draft Angle	Θ2	11°	12°	13°

Notes:

1. Pin 1 visual index feature may vary, but must be located within the hatched area.
2. Dimensioning and tolerancing per ASME Y14.5M
   BSC: Basic Dimension. Theoretically exact value shown without tolerances.
   REF: Reference Dimension, usually without tolerance, for information purposes only.

Microchip Technology Drawing C04-300-Y8 Rev D Sheet 2 of 2

Downloaded from Arrow.com.

48-Lead Plastic Thin Quad Flatpack (Y8) - 7x7x1.0 mm Body [TQFP]

Note: For the most current package drawings, please see the Microchip Packaging Specification located at http://www.microchip.com/packaging

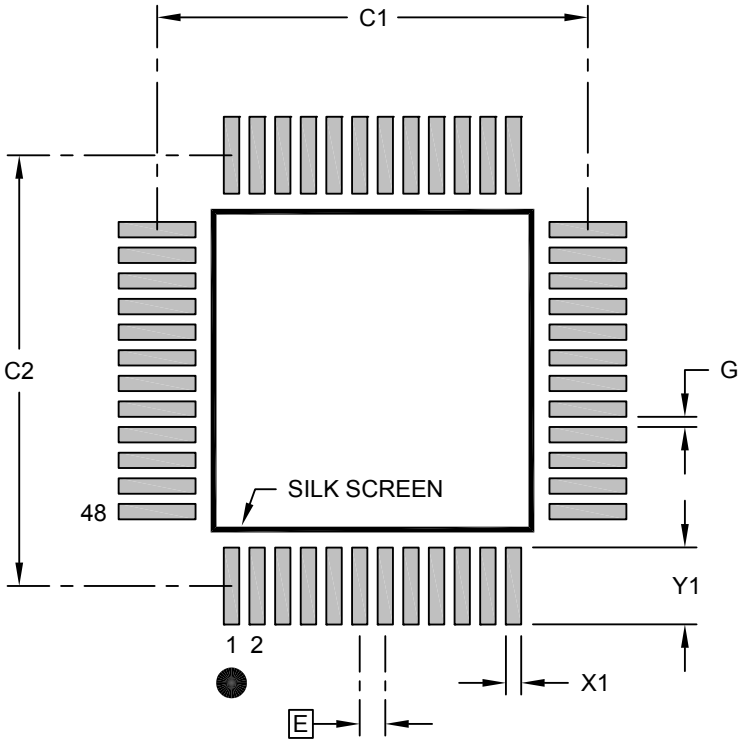

RECOMMENDED LAND PATTERN

Units		MILLIMETERS		
Dimension Limits		MIN	NOM	MAX
Contact Pitch	E		0.50 BSC	
Contact Pad Spacing	C1		8.40	
Contact Pad Spacing	C2		8.40	
Contact Pad Width (X48)	X1			0.30
Contact Pad Length (X48)	Y1			1.50
Distance Between Pads	G	0.20		

Notes:

1. Dimensioning and tolerancing per ASME Y14.5M
   BSC: Basic Dimension. Theoretically exact value shown without tolerances.
2. For best soldering results, thermal vias, if used, should be filled or tented to avoid solder loss during reflow process

Microchip Technology Drawing C04-2300-Y8 Rev D

Table 44-11. Device and Package Maximum Weight

140	mg

Downloaded from Arrow.com.

Table 44-12. Package Reference

Package Outline Drawing MCHP reference	C04-00300
JESD97 Classification	E3

Downloaded from Arrow.com.

44.1.7 48-Pin VQFN

48-Lead Very Thin Quad Flat Pack No-Leads (T3B) 7x7x0.9 mm [VQFN]
With 5.15x5.15 mm Exposed Pad; Atmel Legacy Global Package Code ZLG

Note: For the most current package drawings, please see the Microchip Packaging Specification located at http://www.microchip.com/packaging

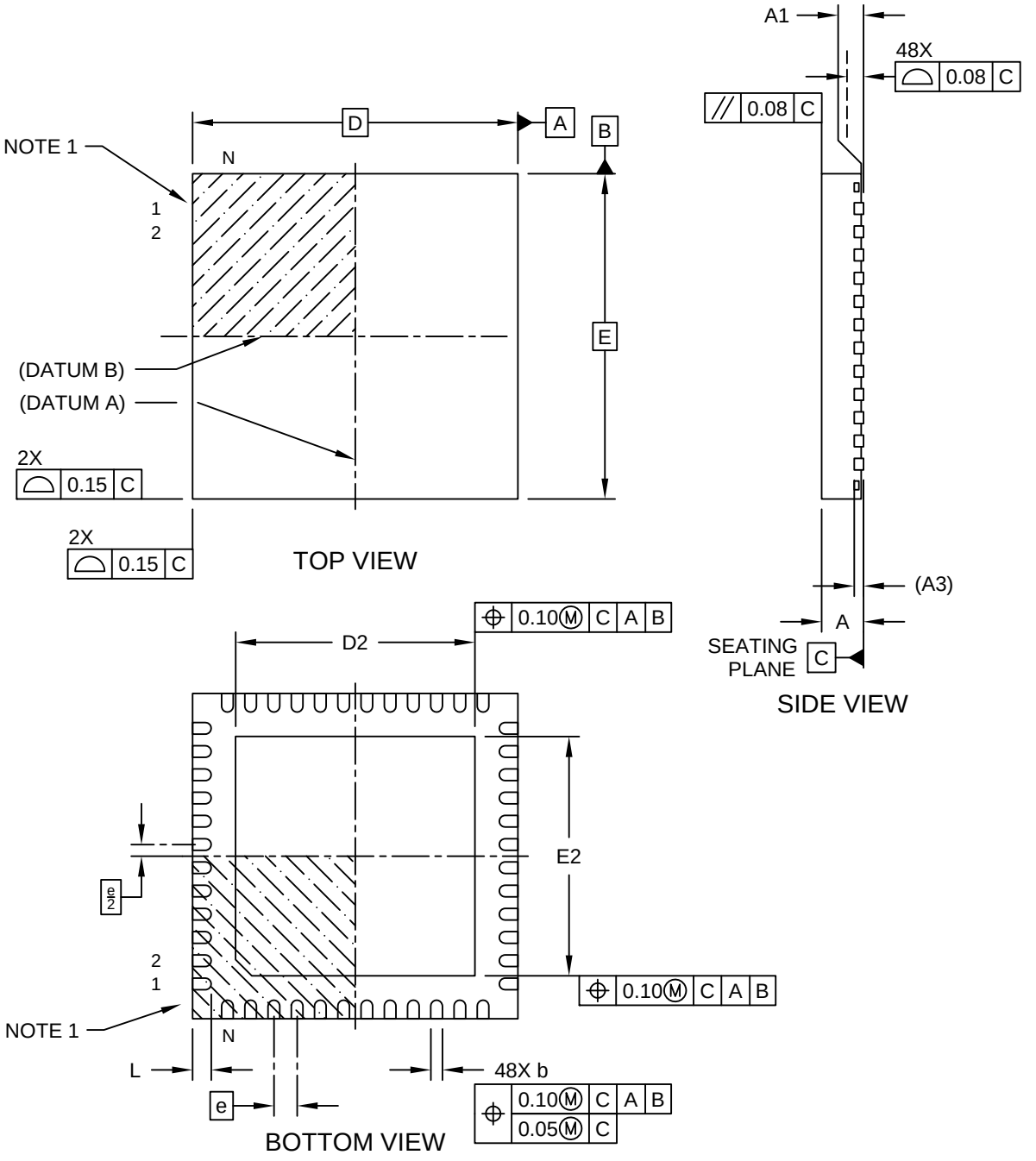

Microchip Technology Drawing C04-21425 Rev A Sheet 1 of 2

Downloaded from Arrow.com.

48-Lead Very Thin Quad Flat Pack No-Leads (T3B) 7x7x0.9 mm [VQFN] With 5.15x5.15 mm Exposed Pad; Atmel Legacy Global Package Code ZLG

Note: For the most current package drawings, please see the Microchip Packaging Specification located at http://www.microchip.com/packaging

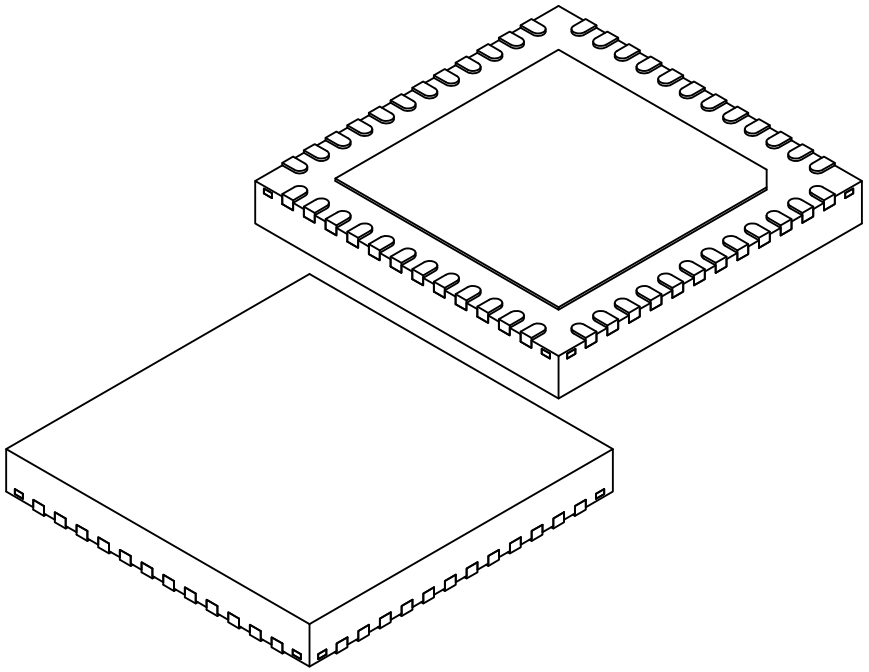

Units		MILLIMETERS		
Dimension Limits		MIN	NOM	MAX
Number of Terminals	N		48	
Pitch	e		0.50 BSC	
Overall Height	A	0.80	0.85	0.90
Standoff	A1	0.00	0.02	0.05
Terminal Thickness	A3		0.20 REF	
Overall Length	D		7.00 BSC	
Exposed Pad Length	D2	5.05	5.15	5.25
Overall Width	E		7.00 BSC	
Exposed Pad Width	E2	5.05	5.15	5.25
Terminal Width	b	0.18	0.25	0.30
Terminal Length	L	0.30	0.40	0.50
Terminal-to-Exposed-Pad	K	0.20	-	-

Notes:

1. Pin 1 visual index feature may vary, but must be located within the hatched area.
2. Package is saw singulated
3. Dimensioning and tolerancing per ASME Y14.5M
   BSC: Basic Dimension. Theoretically exact value shown without tolerances.
   REF: Reference Dimension, usually without tolerance, for information purposes only.

Microchip Technology Drawing C04-21425 Rev A Sheet 2 of 2

Downloaded from Arrow.com.

48-Lead Very Thin Quad Flat Pack No-Leads (T3B) 7x7x0.9 mm [VQFN] With 5.15x5.15 mm Exposed Pad; Atmel Legacy Global Package Code ZLG

Note: For the most current package drawings, please see the Microchip Packaging Specification located at http://www.microchip.com/packaging

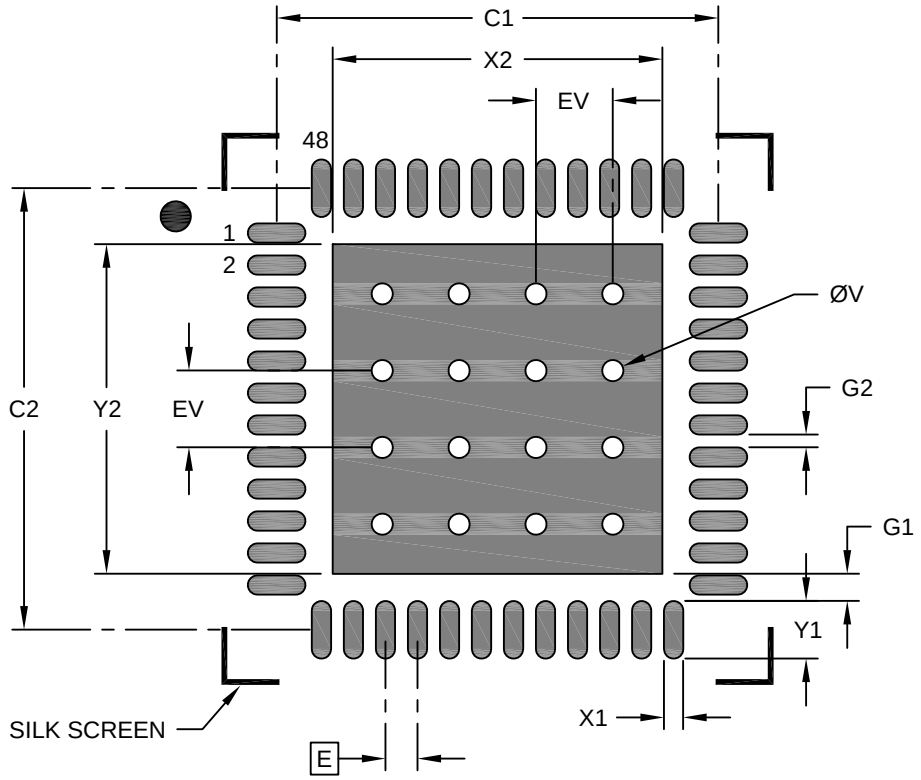

RECOMMENDED LAND PATTERN

Units		MILLIMETERS		
Dimension Limits		MIN	NOM	MAX
Contact Pitch	E		0.50 BSC	
Optional Center Pad Width	X2			5.15
Optional Center Pad Length	Y2			5.15
Contact Pad Spacing	C1		6.90	
Contact Pad Spacing	C2		6.90	
Contact Pad Width (X20)	X1			0.30
Contact Pad Length (X20)	Y1			0.90
Contact Pad to Center Pad (X48)	G1	0.20		
Contact Pad to Contact Pad (X44)	G2	0.20		
Thermal Via Diameter	V		0.33	
Thermal Via Pitch	EV		1.20	

Notes:

1. Dimensioning and tolerancing per ASME Y14.5M
   BSC: Basic Dimension. Theoretically exact value shown without tolerances.
2. For best soldering results, thermal vias, if used, should be filled or tented to avoid solder loss during reflow process

Microchip Technology Drawing C04-23425 Rev A

Note: The exposed die attach pad is not connected electrically inside the device. It is recommenced to attach (solder) the exposed pad to a matching perimeter landing beneath the package punctuated with vias to the ground layer.

Downloaded from Arrow.com.

Table 44-13. Device and Package Maximum Weight

140	mg

Table 44-14. Package Reference

Package Outline Drawing MCHP reference	C04-21425
JESD97 Classification	E3

Downloaded from Arrow.com.

44.1.8 48 lead VQFN with Sawn Wettable Flanks

48-Lead Very Thin Plastic Quad Flat, No Lead Package (U5B) - 7x7 mm Body [VQFN] With 5.15 mm Exposed Pad and Stepped Wettable Flanks; Atmel Legacy ZLH

Note:	For the most current package drawings, please see the Microchip Packaging Specification located at http://www.microchip.com/packaging

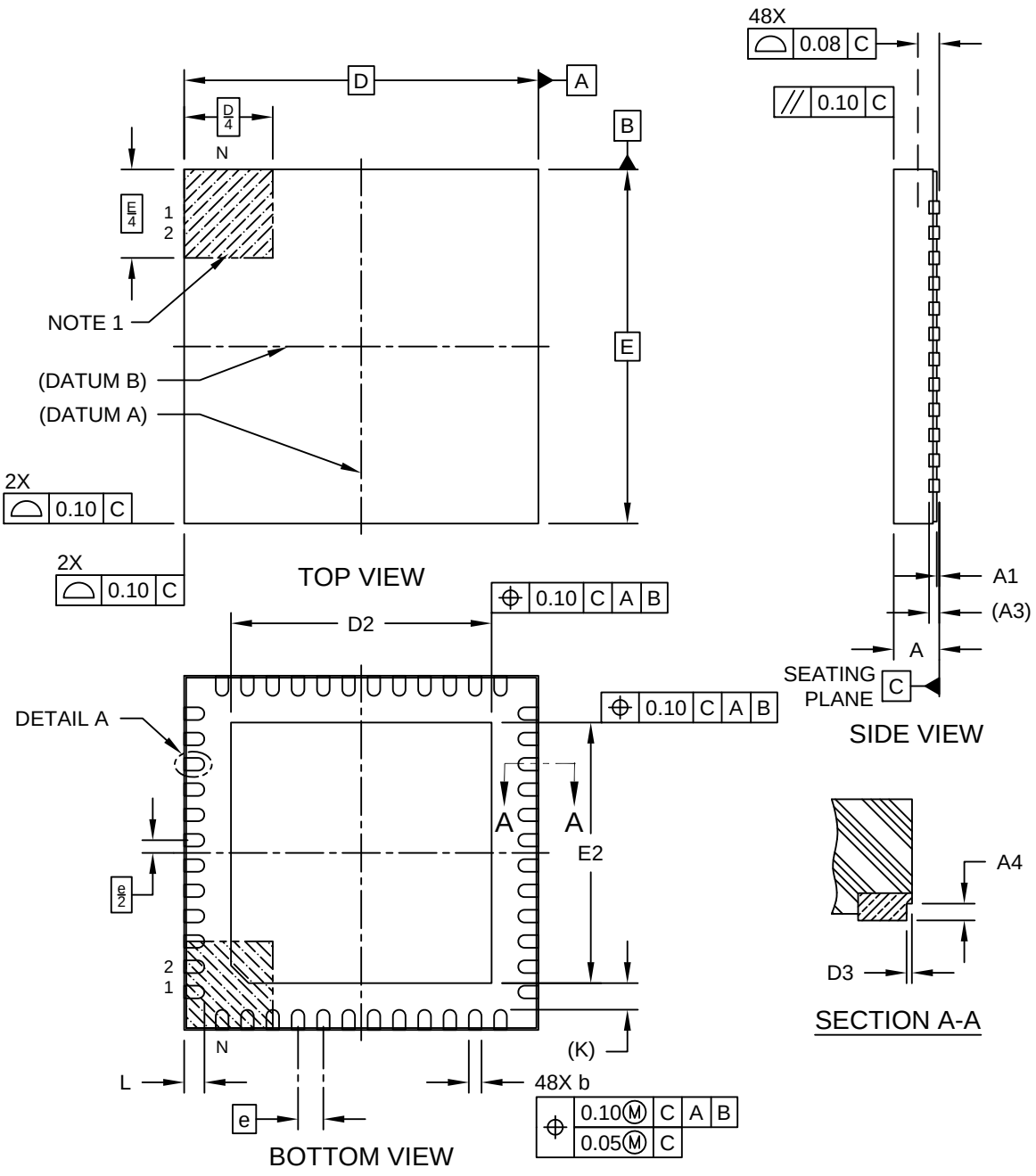

Microchip Technology Drawing C04-21493 Rev A Sheet 1 of 2

Downloaded from Arrow.com.

48-Lead Very Thin Plastic Quad Flat, No Lead Package (U5B) - 7x7 mm Body [VQFN] With 5.15 mm Exposed Pad and Stepped Wettable Flanks; Atmel Legacy ZLH

Note: For the most current package drawings, please see the Microchip Packaging Specification located at http://www.microchip.com/packaging

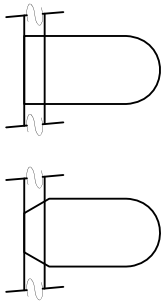

DETAIL 1
ALTERNATE TERMINAL CONFIGURATIONS

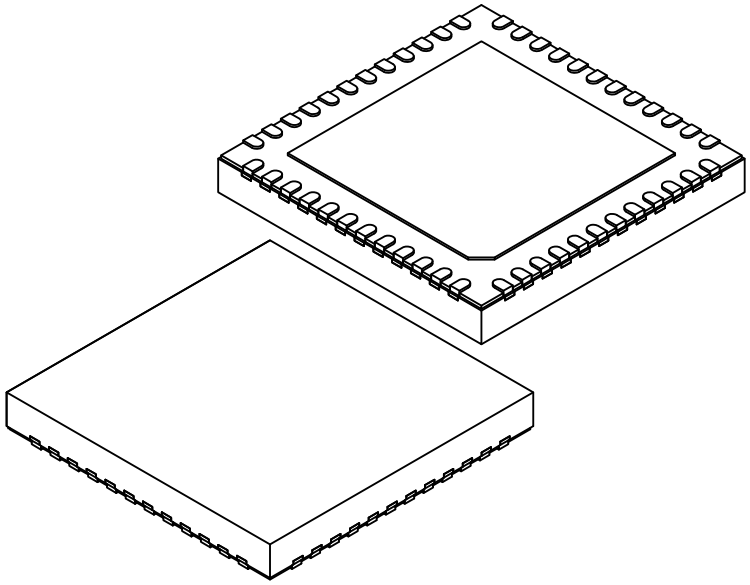

Units		MILLIMETERS		
Dimension Limits		MIN	NOM	MAX
Number of Terminals	N		48	
Pitch	e		0.50 BSC	
Overall Height	A	0,80	0.85	0.90
Standoff	A1	0.00	0.02	0.05
Terminal Thickness	A3		0.203 REF	
Overall Length	D		7.00 BSC	
Exposed Pad Length	D2	5.05	5.15	5.25
Overall Width	E		7.00 BSC	
Exposed Pad Width	E2	5.05	5.15	5.25
Terminal Width	b	0.20	0.25	0.30
Terminal Length	L	0.35	0.40	0.45
Terminal-to-Exposed-Pad	K		0.53 REF	
Wettable Flank Step Length	D3	-	-	0.085
Wettable Flank Step Height	A4	0.10	-	0.19

Notes:

1. Pin 1 visual index feature may vary, but must be located within the hatched area.
2. Package is saw singulated
3. Dimensioning and tolerancing per ASME Y14.5M
   BSC: Basic Dimension. Theoretically exact value shown without tolerances.
   REF: Reference Dimension, usually without tolerance, for information purposes only.

Microchip Technology Drawing C04-21493 Rev A Sheet 2 of 2

Downloaded from Arrow.com.

48-Lead Very Thin Plastic Quad Flat, No Lead Package (U5B) - 7x7 mm Body [VQFN] With 5.15 mm Exposed Pad and Stepped Wettable Flanks; Atmel Legacy ZLH

Note: For the most current package drawings, please see the Microchip Packaging Specification located at http://www.microchip.com/packaging

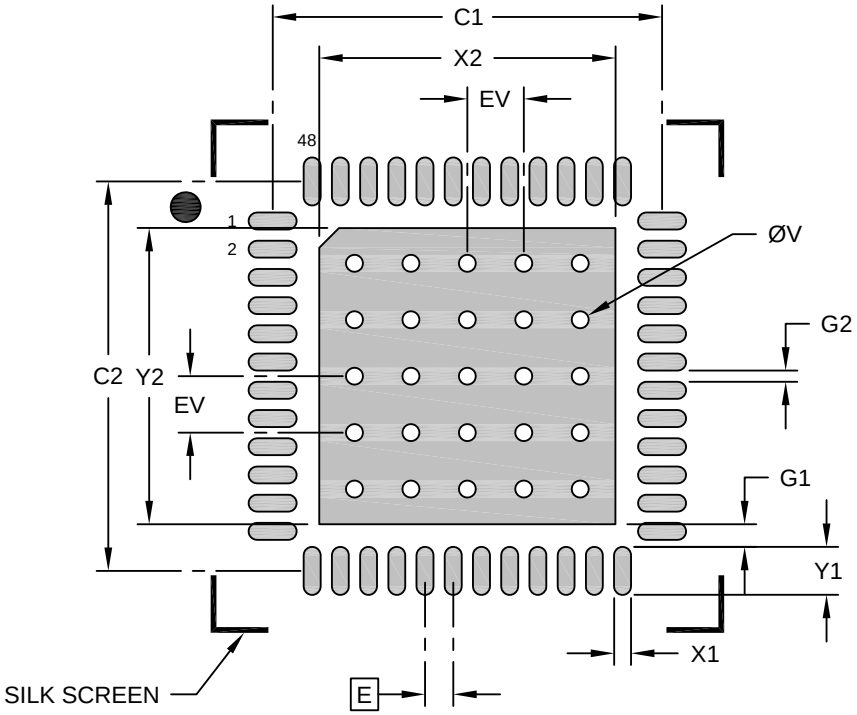

RECOMMENDED LAND PATTERN

Units		MILLIMETERS		
Dimension Limits		MIN	NOM	MAX
Contact Pitch	E		0.50 BSC	
Optional Center Pad Width	X2			5.25
Optional Center Pad Length	Y2			5.25
Contact Pad Spacing	C1		6.90	
Contact Pad Spacing	C2		6.90	
Contact Pad Width (X48)	X1			0.30
Contact Pad Length (X48)	Y1			0.85
Contact Pad to Center Pad (X48)	G1	0.20		
Contact Pad to Center Pad (X44)	G2	0.40		
Thermal Via Diameter	V		0.30	
Thermal Via Pitch	EV		1.00	

Notes:

1. Dimensioning and tolerancing per ASME Y14.5M
   BSC: Basic Dimension. Theoretically exact value shown without tolerances.
2. For best soldering results, thermal vias, if used, should be filled or tented to avoid solder loss during reflow process

Microchip Technology Drawing C04-23493 Rev A

Table 44-15. Device and Package Maximum Weight

140	mg

Downloaded from Arrow.com.

Table 44-16. Package Reference

JEDEC Drawing Reference	C04-21493
JESD97 Classification	E3

Note: For the most current package drawings, please see the Microchip Packaging Specification located at http://www.microchip.com/packaging.

Downloaded from Arrow.com.

44.1.9 45-ball WLCSP

45-Ball Wafer Level Chip Scale Package (FSB) - 2.944x2.699 mm Body [WLCSP]

Note:	For the most current package drawings, please see the Microchip Packaging Specification located at http://www.microchip.com/packaging

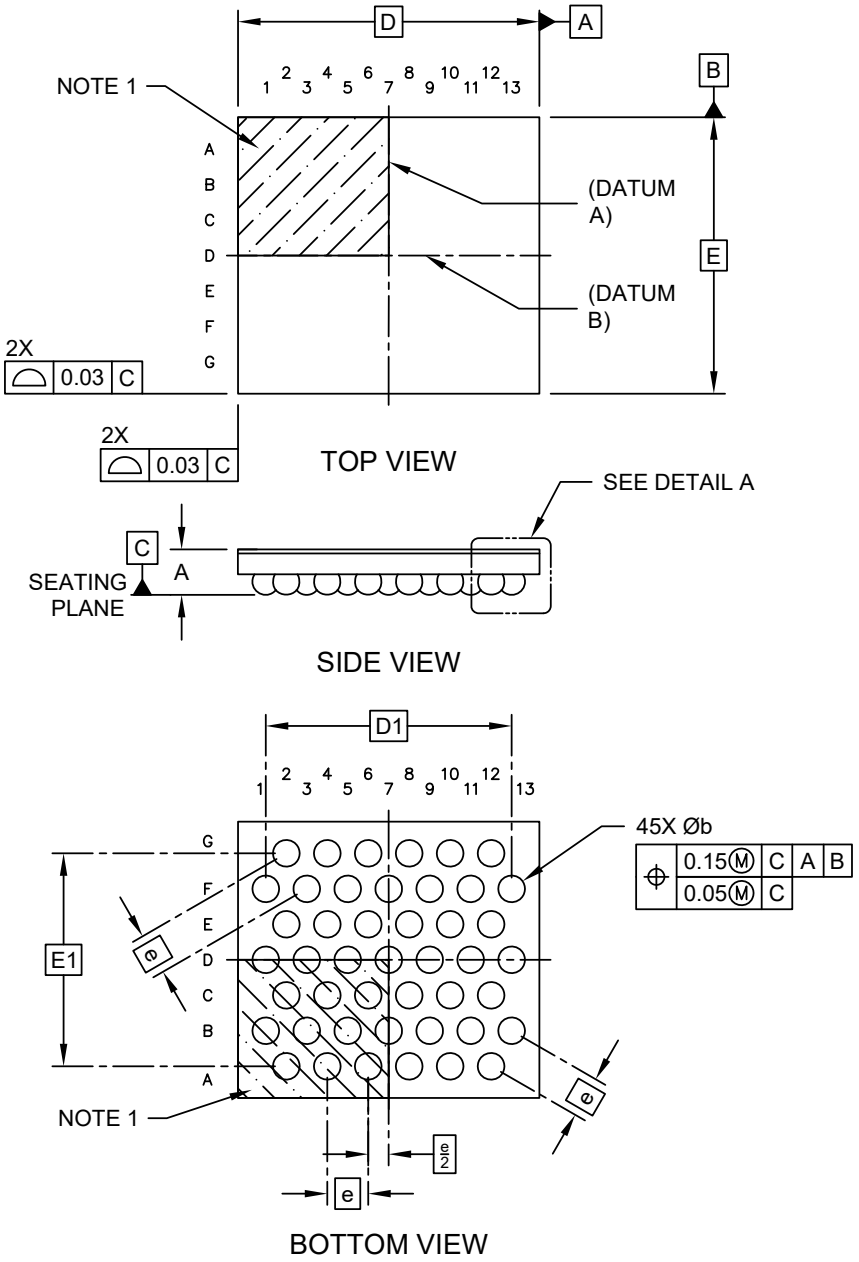

Microchip Technology Drawing C04-21247 Rev A Sheet 1 of 2

Downloaded from Arrow.com.

45-Ball Wafer Level Chip Scale Package (FSB) - 2.944x2.699 mm Body [WLCSP]

Note: For the most current package drawings, please see the Microchip Packaging Specification located at http://www.microchip.com/packaging

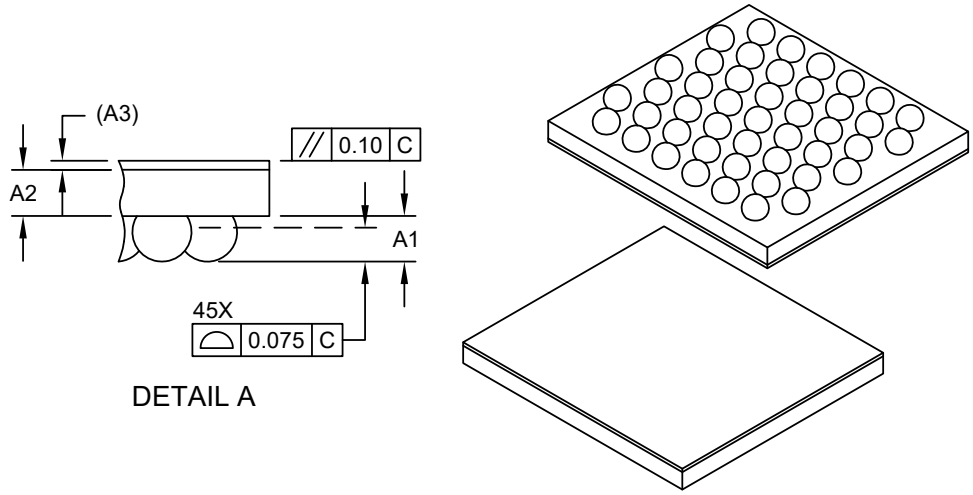

Units		MILLIMETERS		
Dimension Limits		MIN	NOM	MAX
Number of Terminals	N		45	
Pitch	e		0.40 BSC	
Overall Height	A	-	-	0.483
Bump Height	A1	0.17	0.20	0.23
Die Thickness	A2	0.178	0.203	0.228
Backside Coating	A3		0.04 REF	
Overall Length	D		2.944 BSC	
Overall Bump Pitch	D1		2.40	
Overall Width	E		2.699 BSC	
Overall Bump Pitch	E1		2.079 BSC	
Terminal Width	b	0.23	0.26	0.29

Notes:

1. Pin 1 visual index feature may vary, but must be located within the hatched area.
2. Package is saw singulated
3. Dimensioning and tolerancing per ASME Y14.5M

BSC: Basic Dimension. Theoretically exact value shown without tolerances.
REF: Reference Dimension, usually without tolerance, for information purposes only.

Microchip Technology Drawing C04-21247 Rev A Sheet 2 of 2

Downloaded from Arrow.com.

45-Ball Wafer Level Chip Scale Package (FSB) - 2.944x2.699 mm Body [WLCSP]

Note: For the most current package drawings, please see the Microchip Packaging Specification located at http://www.microchip.com/packaging

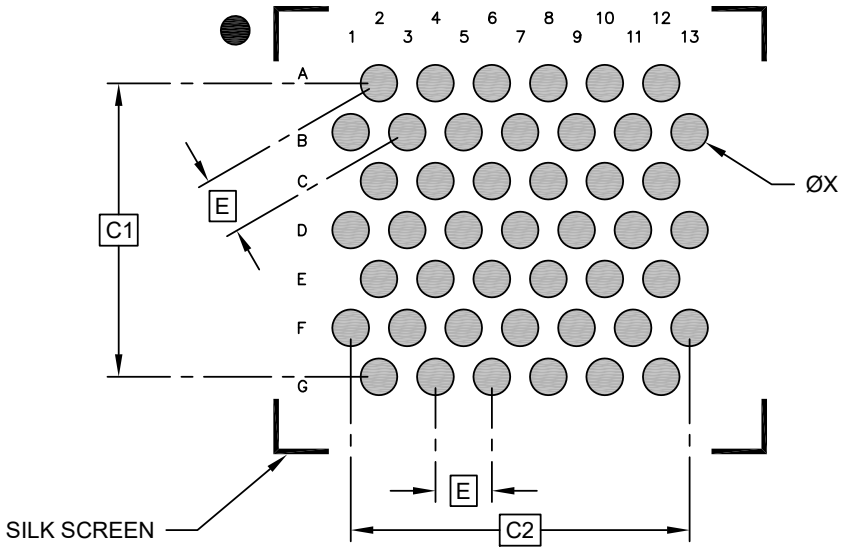

RECOMMENDED LAND PATTERN

Units		MILLIMETERS		
Dimension Limits		MIN	NOM	MAX
Contact Pitch	E		0.40 BSC	
Contact Pad Spacing	C1		2.079 BSC	
Contact Pad Spacing	C2		2.40 BSC	
Contact Pad Diameter (X45)	X		0.26	

Notes:

1. Dimensioning and tolerancing per ASME Y14.5M

   BSC: Basic Dimension. Theoretically exact value shown without tolerances.

Microchip Technology Drawing C04-23247 Rev A

Table 44-17. Device and Package Maximum Weight

7.3	mg

Downloaded from Arrow.com.

Table 44-18. Package Reference

Package Outline Drawing MCHP reference	C04-21247
JESD97 Classification	E1

Downloaded from Arrow.com.

44.1.10 32-Pin TQFP

32-Lead Plastic Thin Quad Flatpack (PT) - 7x7x1.0 mm Body [TQFP]
2.00 mm Footprint; Also Atmel Legacy Global Package Code AUT

Note:	For the most current package drawings, please see the Microchip Packaging Specification located at http://www.microchip.com/packaging

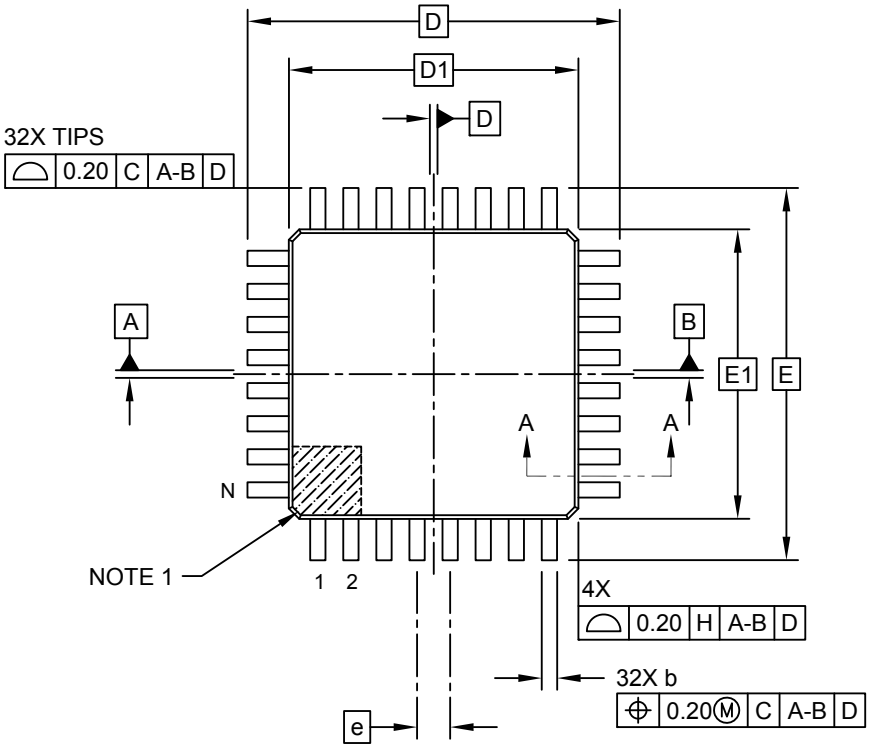

TOP VIEW

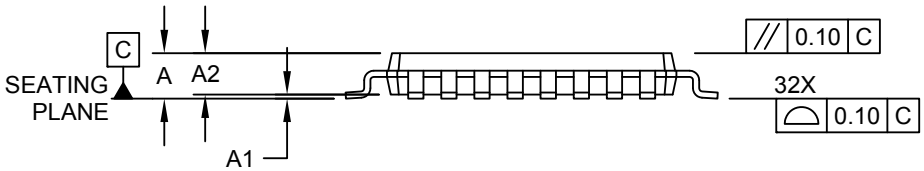

SIDE VIEW

Microchip Technology Drawing C04-074 Rev C Sheet 1 of 2

Downloaded from Arrow.com.

32-Lead Plastic Thin Quad Flatpack (PT) - 7x7x1.0 mm Body [TQFP]
2.00 mm Footprint; Also Atmel Legacy Global Package Code AUT

Note: For the most current package drawings, please see the Microchip Packaging Specification located at http://www.microchip.com/packaging

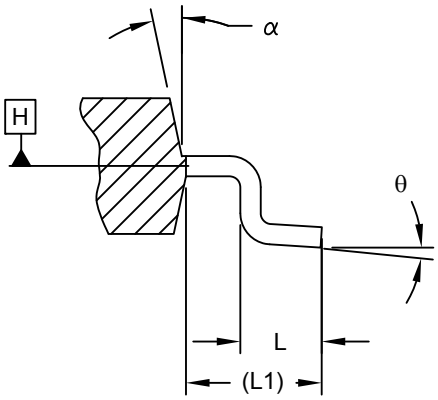

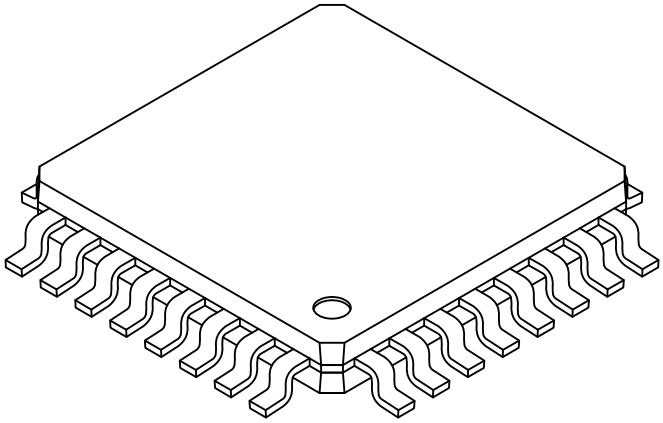

SECTION A-A

Units		MILLIMETERS		
Dimension Limits		MIN	NOM	MAX
Number of Leads	N		32	
Lead Pitch	e		0.80 BSC	
Overall Height	A	-	-	1.20
Standoff	A1	0.05	-	0.15
Molded Package Thickness	A2	0.95	1.00	1.05
Foot Length	L	0.45	0.60	0.75
Footprint	L1		1.00 REF	
Foot Angle	θ	0°	-	7°
Overall Width	E		9.00 BSC	
Overall Length	D		9.00 BSC	
Molded Package Width	E1		7.00 BSC	
Molded Package Length	D1		7.00 BSC	
Lead Width	b	0.30	0.37	0.45
Mold Draft Angle Top	α	11°	-	13°

Notes:

1. Pin 1 visual index feature may vary, but must be located within the hatched area.
2. Dimensioning and tolerancing per ASME Y14.5M

   BSC: Basic Dimension. Theoretically exact value shown without tolerances.
   REF: Reference Dimension, usually without tolerance, for information purposes only.

Microchip Technology Drawing C04-074 Rev C Sheet 2 of 2

Downloaded from Arrow.com.

32-Lead Thin Plastic Quad Flatpack (PT) - 7x7 mm Body [TQFP]
2.00 mm Footprint; Also Atmel Legacy Global Package Code AUT

Note: For the most current package drawings, please see the Microchip Packaging Specification located at http://www.microchip.com/packaging

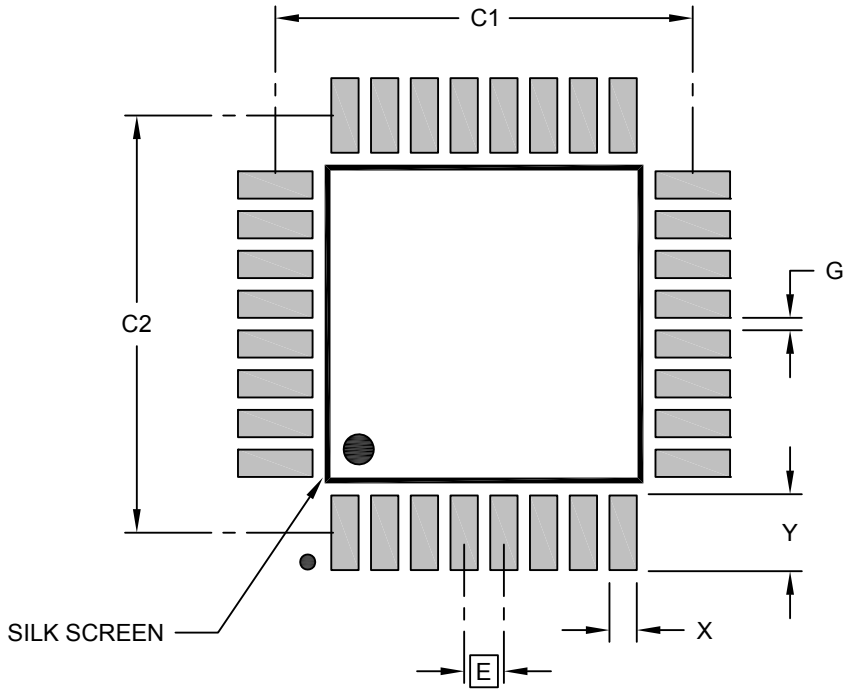

RECOMMENDED LAND PATTERN

Units		MILLIMETERS		
Dimension Limits		MIN	NOM	MAX
Contact Pitch	E	0.80 BSC		
Contact Pad Spacing	C1		8.40	
Contact Pad Spacing	C2		8.40	
Contact Pad Width (Xnn)	X			0.55
Contact Pad Length (Xnn)	Y			1.55
Contact Pad to Contact Pad (Xnn)	G	0.25		

Notes:

1. Dimensioning and tolerancing per ASME Y14.5M
   BSC: Basic Dimension. Theoretically exact value shown without tolerances.

Microchip Technology Drawing C04-2074 Rev C

Table 44-19. Device and Package Maximum Weight

100	mg

Downloaded from Arrow.com.

Table 44-20. Package Reference

Package Outline Drawing MCHP reference	C04-00074
JESD97 Classification	E3

Downloaded from Arrow.com.

44.1.11 32-Pin VQFN

32-Lead Very Thin Plastic Quad Flat, No Lead Package (S8B) - 5x5 mm Body [VQFN] With 3.60 mm Exposed Pad; Atmel Legacy Global Package Code ZKV

Note:	For the most current package drawings, please see the Microchip Packaging Specification located at http://www.microchip.com/packaging

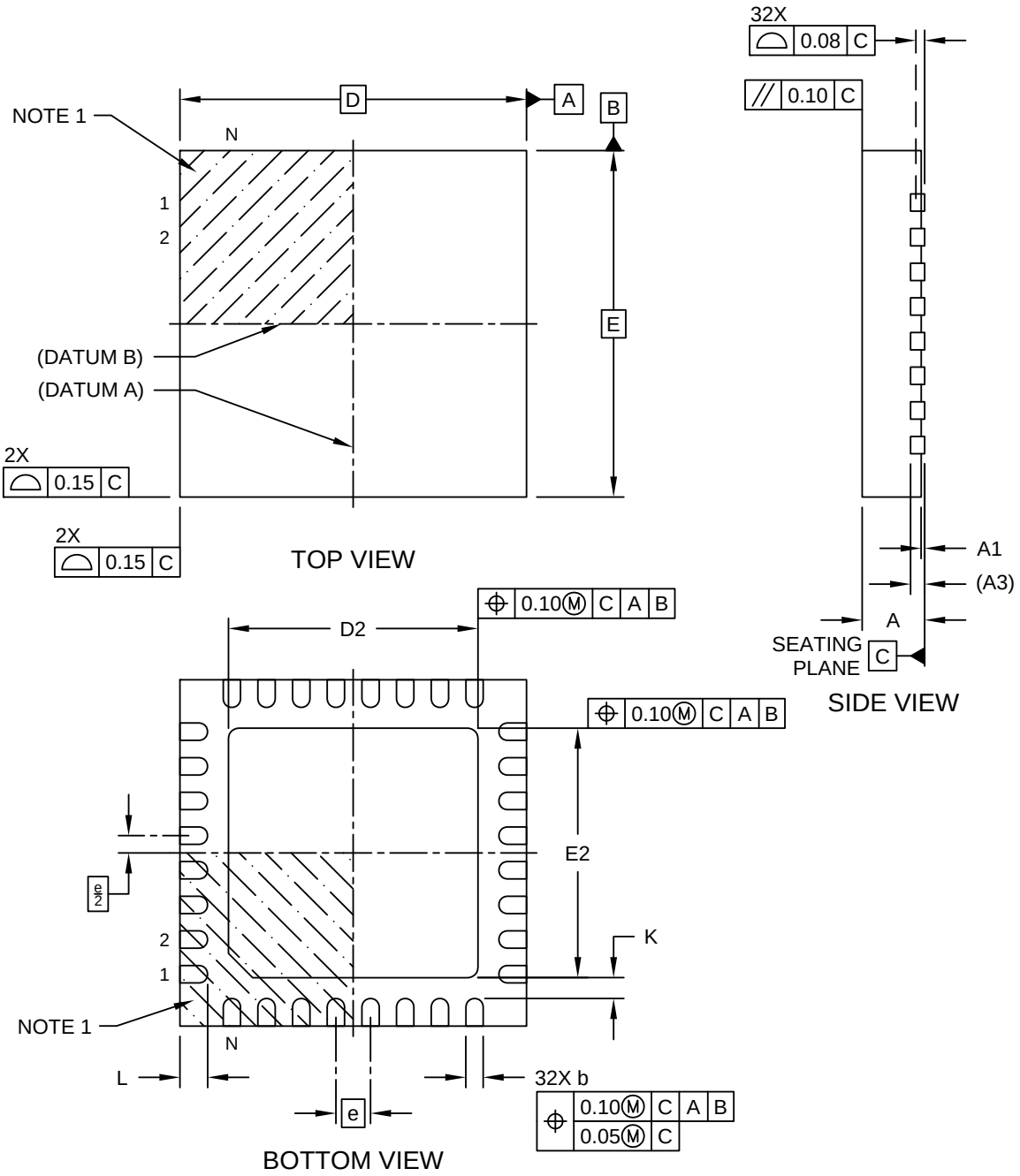

Microchip Technology Drawing C04-21402 Rev A Sheet 1 of 2

Downloaded from Arrow.com.

32-Lead Very Thin Plastic Quad Flat, No Lead Package (S8B) - 5x5 mm Body [VQFN] With 3.60 mm Exposed Pad; Atmel Legacy Global Package Code ZKV

Note: For the most current package drawings, please see the Microchip Packaging Specification located at http://www.microchip.com/packaging

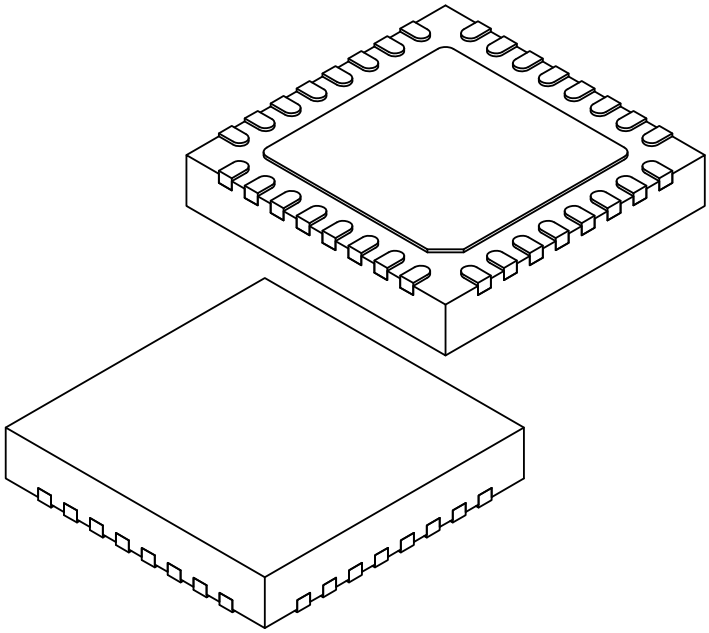

Units		MILLIMETERS		
Dimension Limits		MIN	NOM	MAX
Number of Terminals	N		32	
Pitch	e		0.50 BSC	
Overall Height	A	0.80	0.90	1.00
Standoff	A1	0.00	0.02	0.05
Terminal Thickness	A3		0.20 REF	
Overall Length	D		5.00 BSC	
Exposed Pad Length	D2	3.50	3.60	3.70
Overall Width	E		5.00 BSC	
Exposed Pad Width	E2	3.50	3.60	3.70
Terminal Width	b	0.18	0.25	0.30
Terminal Length	L	0.30	0.40	0.50
Terminal-to-Exposed-Pad	K	0.20	-	-

Notes:

1. Pin 1 visual index feature may vary, but must be located within the hatched area.
2. Package is saw singulated
3. Dimensioning and tolerancing per ASME Y14.5M
   BSC: Basic Dimension. Theoretically exact value shown without tolerances.
   REF: Reference Dimension, usually without tolerance, for information purposes only.

Microchip Technology Drawing C04-21402 Rev A Sheet 1 of 2

Downloaded from Arrow.com.

32-Lead Very Thin Plastic Quad Flat, No Lead Package (S8B) - 5x5 mm Body [VQFN] With 3.60 mm Exposed Pad; Atmel Legacy Global Package Code ZKV

Note: For the most current package drawings, please see the Microchip Packaging Specification located at http://www.microchip.com/packaging

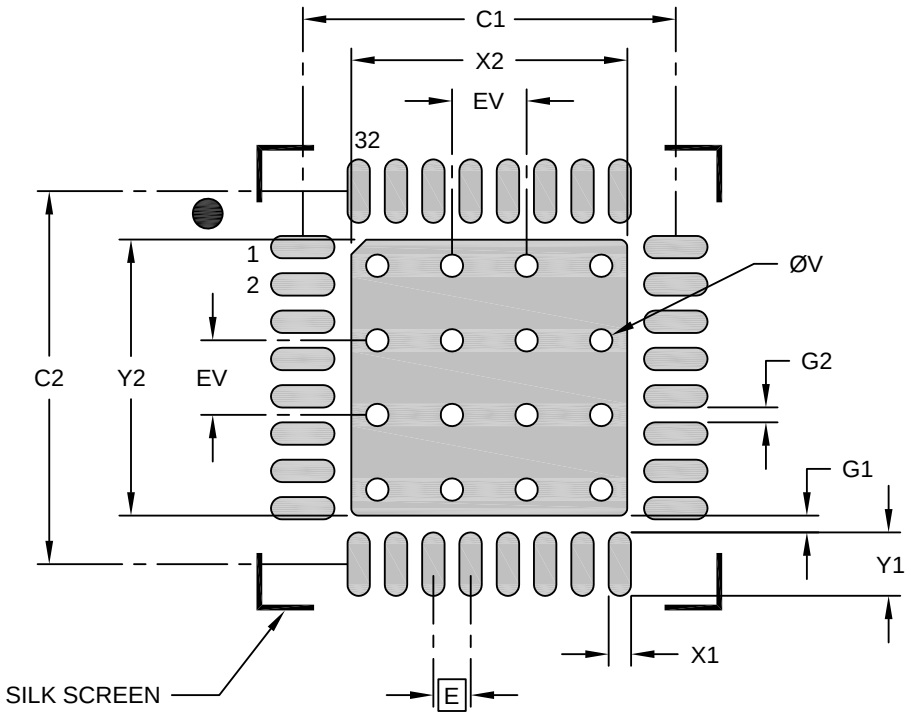

RECOMMENDED LAND PATTERN

Units		MILLIMETERS		
Dimension Limits		MIN	NOM	MAX
Contact Pitch	E	0.50 BSC		
Optional Center Pad Width	X2			3.70
Optional Center Pad Length	Y2			3.70
Contact Pad Spacing	C1		5.00	
Contact Pad Spacing	C2		5.00	
Contact Pad Width (X32)	X1			0.30
Contact Pad Length (X32)	Y1			0.85
Contact Pad to Center Pad (X32)	G1	0.23		
Contact Pad to Contact Pad (X28)	G2	0.20		
Thermal Via Diameter	V		0.30	
Thermal Via Pitch	EV		1.00	

Notes:

1. Dimensioning and tolerancing per ASME Y14.5M
   BSC: Basic Dimension. Theoretically exact value shown without tolerances.
2. For best soldering results, thermal vias, if used, should be filled or tented to avoid solder loss during reflow process

Microchip Technology Drawing C04-23402 Rev A

Note: The exposed die attach pad is connected inside the device to GND and GNDANA.

Downloaded from Arrow.com.

Table 44-21. Device and Package Maximum Weight

90	mg

Table 44-22. Package Reference

Package Outline Drawing MCHP reference	C04-21402
JESD97 Classification	E3

Downloaded from Arrow.com.

44.1.12 32 lead VQFN with Sawn Wettable Flanks

32-Lead Very Thin Plastic Quad Flat, No Lead Package (RTB) - 5x5 mm Body [VQFN] With 3.6x3.6 mm Exposed Pad and Stepped Wettable Flanks; Atmel Legacy ZBS

Note:	For the most current package drawings, please see the Microchip Packaging Specification located at http://www.microchip.com/packaging

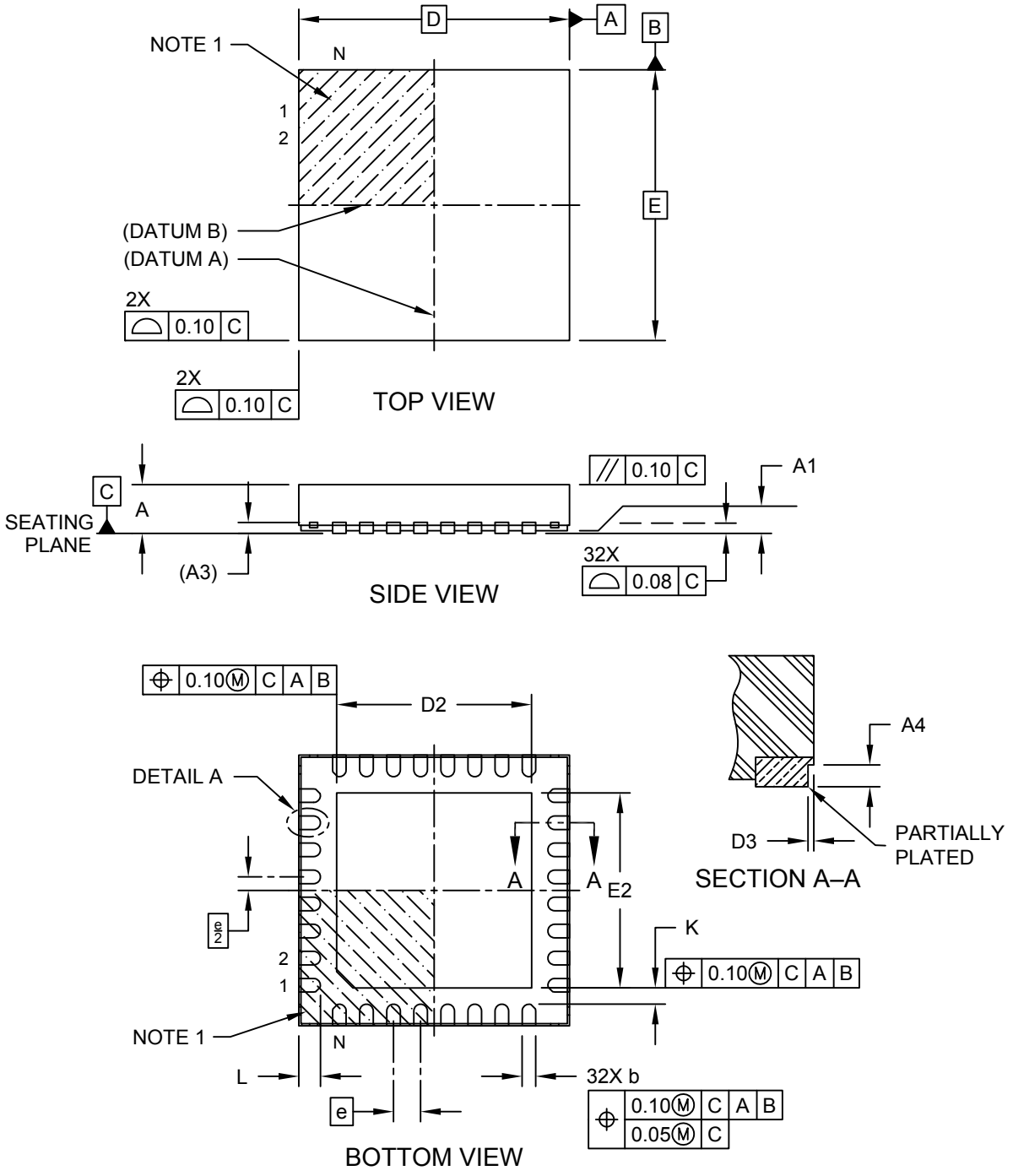

Microchip Technology Drawing C04-21391 Rev E Sheet 1 of 2

Downloaded from Arrow.com.

32-Lead Very Thin Plastic Quad Flat, No Lead Package (RTB) - 5x5 mm Body [VQFN] With 3.6x3.6 mm Exposed Pad and Stepped Wettable Flanks; Atmel Legacy ZBS

Note: For the most current package drawings, please see the Microchip Packaging Specification located at http://www.microchip.com/packaging

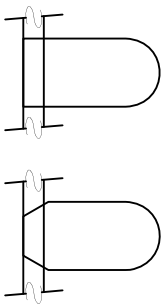

DETAIL 1
ALTERNATE TERMINAL CONFIGURATIONS

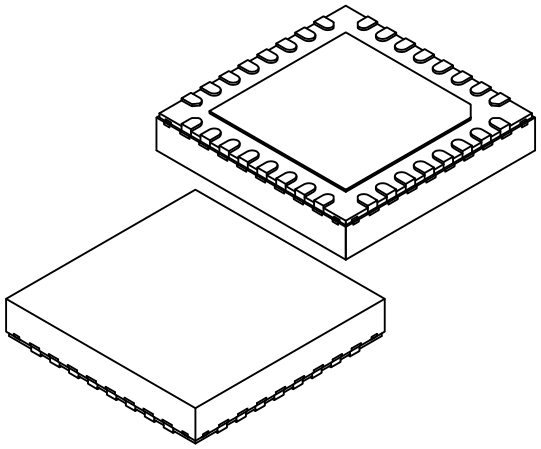

Units		MILLIMETERS		
Dimension Limits		MIN	NOM	MAX
Number of Terminals	N		32	
Pitch	e		0.50 BSC	
Overall Height	A	0.80	0.90	1.00
Standoff	A1	0.00	0.035	0.05
Terminal Thickness	A3		0.203 REF	
Overall Length	D		5.00 BSC	
Exposed Pad Length	D2	3.50	3.60	3.70
Overall Width	E		5.00 BSC	
Exposed Pad Width	E2	3.50	3.60	3.70
Terminal Width	b	0.20	0.25	0.30
Terminal Length	L	0.35	0.40	0.45
Terminal-to-Exposed-Pad	K	0.20	-	-
Wettable Flank Step Cut Width	D3	-	-	0.085
Wettable Flank Step Cut Depth	A4	0.10	-	0.19

Dimensions D3 and A4 above apply to all new products released after November 1, and all products shipped after January 1, 2019, and supersede dimensions D3 and A4 below.
No physical changes are being made to any package; this update is to align cosmetic and tolerance variations from existing suppliers.

Wettable Flank Step Length	D3	0.035	0.06	0.085
Wettable Flank Step Height	A4	0.10	-	0.19

Notes:

1. Pin 1 visual index feature may vary, but must be located within the hatched area.
2. Package is saw singulated
3. Dimensioning and tolerancing per ASME Y14.5M

   BSC: Basic Dimension. Theoretically exact value shown without tolerances.
   REF: Reference Dimension, usually without tolerance, for information purposes only.

Microchip Technology Drawing C04-21391 Rev E Sheet 2 of 2

Downloaded from Arrow.com.

32-Lead Very Thin Plastic Quad Flat, No Lead Package (RTB) - 5x5 mm Body [VQFN] With 3.6x3.6 mm Exposed Pad and Stepped Wettable Flanks; Atmel Legacy ZBS

Note: For the most current package drawings, please see the Microchip Packaging Specification located at http://www.microchip.com/packaging

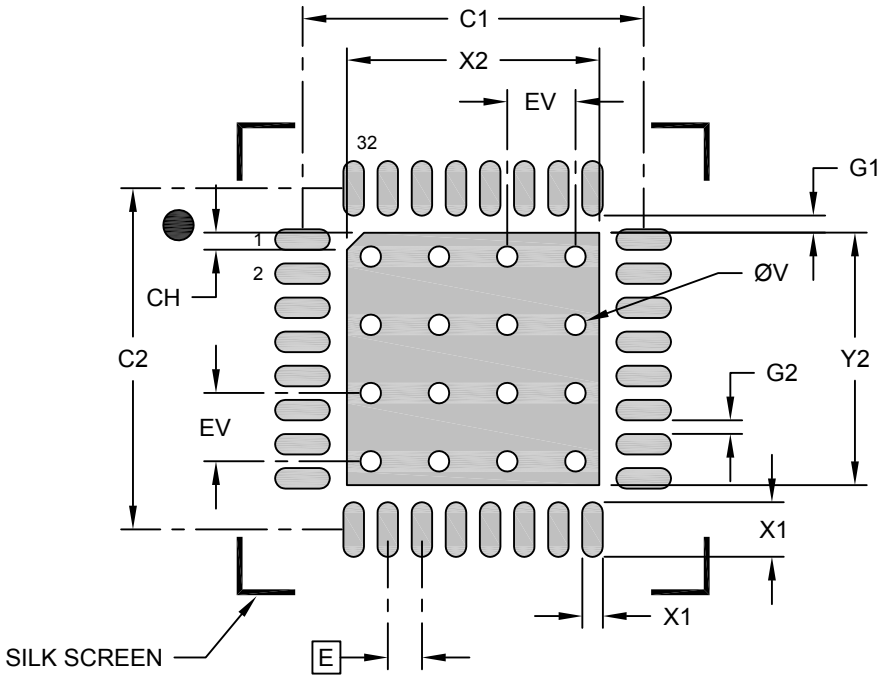

RECOMMENDED LAND PATTERN

Units		MILLIMETERS		
Dimension Limits		MIN	NOM	MAX
Contact Pitch	E		0.50 BSC	
Optional Center Pad Width	X2			3.70
Optional Center Pad Length	Y2			3.70
Exposed Pad 45° Corner Chamfer	CH		0.25	
Contact Pad Spacing	C1		5.00	
Contact Pad Spacing	C2		5.00	
Contact Pad Width (X32)	X1			0.30
Contact Pad Length (X32)	Y1			0.80
Contact Pad to Center Pad (X32)	G1	0.25		
Contact Pad to Contact Pad (X28)	G2	0.20		
Thermal Via Diameter	V		0.30	
Thermal Via Pitch	EV		1.00	

Notes:

1. Dimensioning and tolerancing per ASME Y14.5M
   BSC: Basic Dimension. Theoretically exact value shown without tolerances.
2. For best soldering results, thermal vias, if used, should be filled or tented to avoid solder loss during reflow process

Microchip Technology Drawing C04-23391 Rev. E

Table 44-23. Device and Package Maximum Weight

90	mg

Downloaded from Arrow.com.

Table 44-24. Package Reference

JEDEC Drawing Reference	C04-21391
JESD97 Classification	E3

Note: For the most current package drawings, please see the Microchip Packaging Specification located at http://www.microchip.com/packaging.

Downloaded from Arrow.com.

44.1.13 35 ball WLCSP (Device Variant B)

35-Ball Wafer Level Chip Scale Package (FQB) - 2.821x2.529 mm Body [WLCSP]

Note: For the most current package drawings, please see the Microchip Packaging Specification located at http://www.microchip.com/packaging

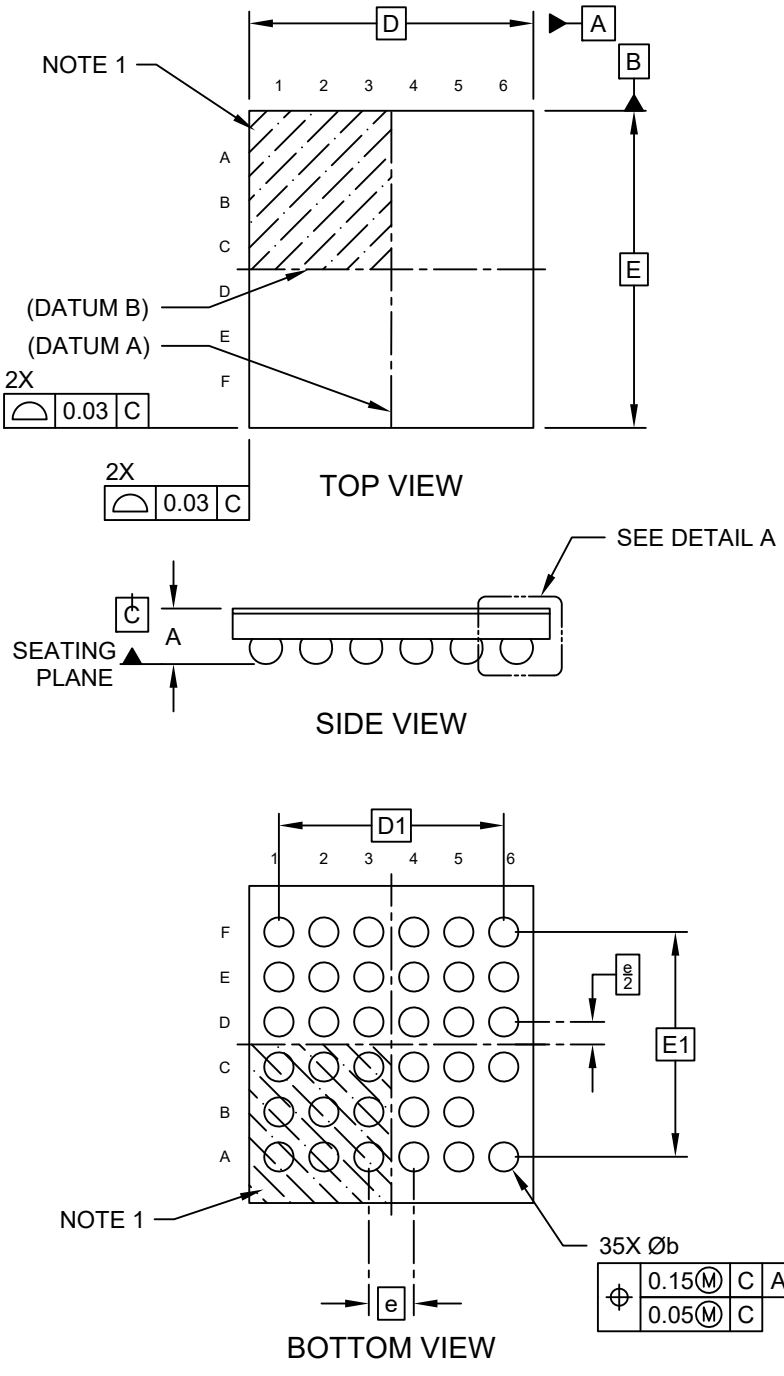

Microchip Technology Drawing C04-21245 Rev A Sheet 1 of 2

Downloaded from Arrow.com.

35-Ball Wafer Level Chip Scale Package (FQB) - 2.821x2.529 mm Body [WLCSP]

Note: For the most current package drawings, please see the Microchip Packaging Specification located at http://www.microchip.com/packaging

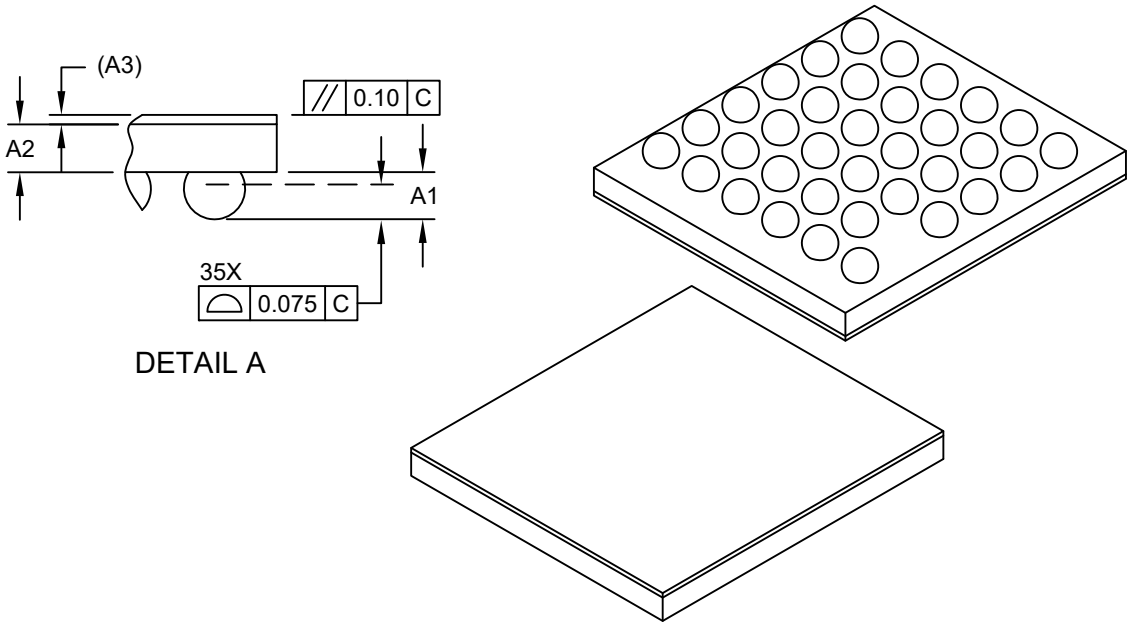

Units		MILLIMETERS		
Dimension Limits		MIN	NOM	MAX
Number of Terminals	N		35	
Pitch	e		0.40 BSC	
Overall Height	A	-	-	0.483
Bump Height	A1	0.17	0.20	0.23
Die Thickness	A2	0.178	0.203	0.228
Backside Coating	A3		0.04 REF	
Overall Length	D		2.529 BSC	
Overall Bump Pitch	D1		2.00 BSC	
Overall Width	E		2.821 BSC	
Overall Bump Pitch	E1		2.00 BSC	
Terminal Width	b	0.23	0.26	0.29

Notes:

1. Pin 1 visual index feature may vary, but must be located within the hatched area.
2. Package is saw singulated
3. Dimensioning and tolerancing per ASME Y14.5M

BSC: Basic Dimension. Theoretically exact value shown without tolerances.
REF: Reference Dimension, usually without tolerance, for information purposes only.

Microchip Technology Drawing C04-21245 Rev A Sheet 2 of 2

Downloaded from Arrow.com.

35-Ball Wafer Level Chip Scale Package (FQB) - 2.821x2.529 mm Body [WLCSP]

Note: For the most current package drawings, please see the Microchip Packaging Specification located at http://www.microchip.com/packaging

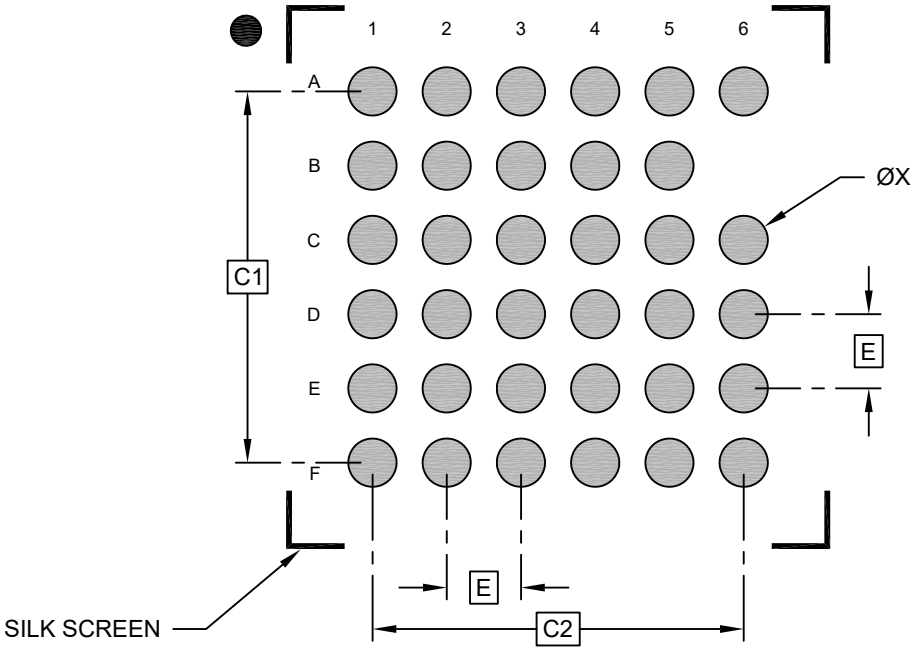

RECOMMENDED LAND PATTERN

Units		MILLIMETERS		
Dimension Limits		MIN	NOM	MAX
Contact Pitch	E		0.40 BSC	
Contact Pad Spacing	C1		2.00 BSC	
Contact Pad Spacing	C2		2.00 BSC	
Contact Pad Diameter (X35)	X		0.26	

Notes:

1. Dimensioning and tolerancing per ASME Y14.5M
   BSC: Basic Dimension. Theoretically exact value shown without tolerances.

Microchip Technology Drawing C04-23245 Rev. A

Table 44-25. Device and Package Maximum Weight

6.2	mg

Downloaded from Arrow.com.

Table 44-26. Package Reference

JEDEC Drawing Reference	C04-21245
JESD97 Classification	E1

Downloaded from Arrow.com.

44.1.14 35 ball WLCSP (Device Variant C)

35-Ball Wafer Level Chip Scale Package (GFB) - 2.78x2.578x0.443 mm Body [WCLSP]
Atmel Global Package Code GJS

Note:	For the most current package drawings, please see the Microchip Packaging Specification located at http://www.microchip.com/packaging

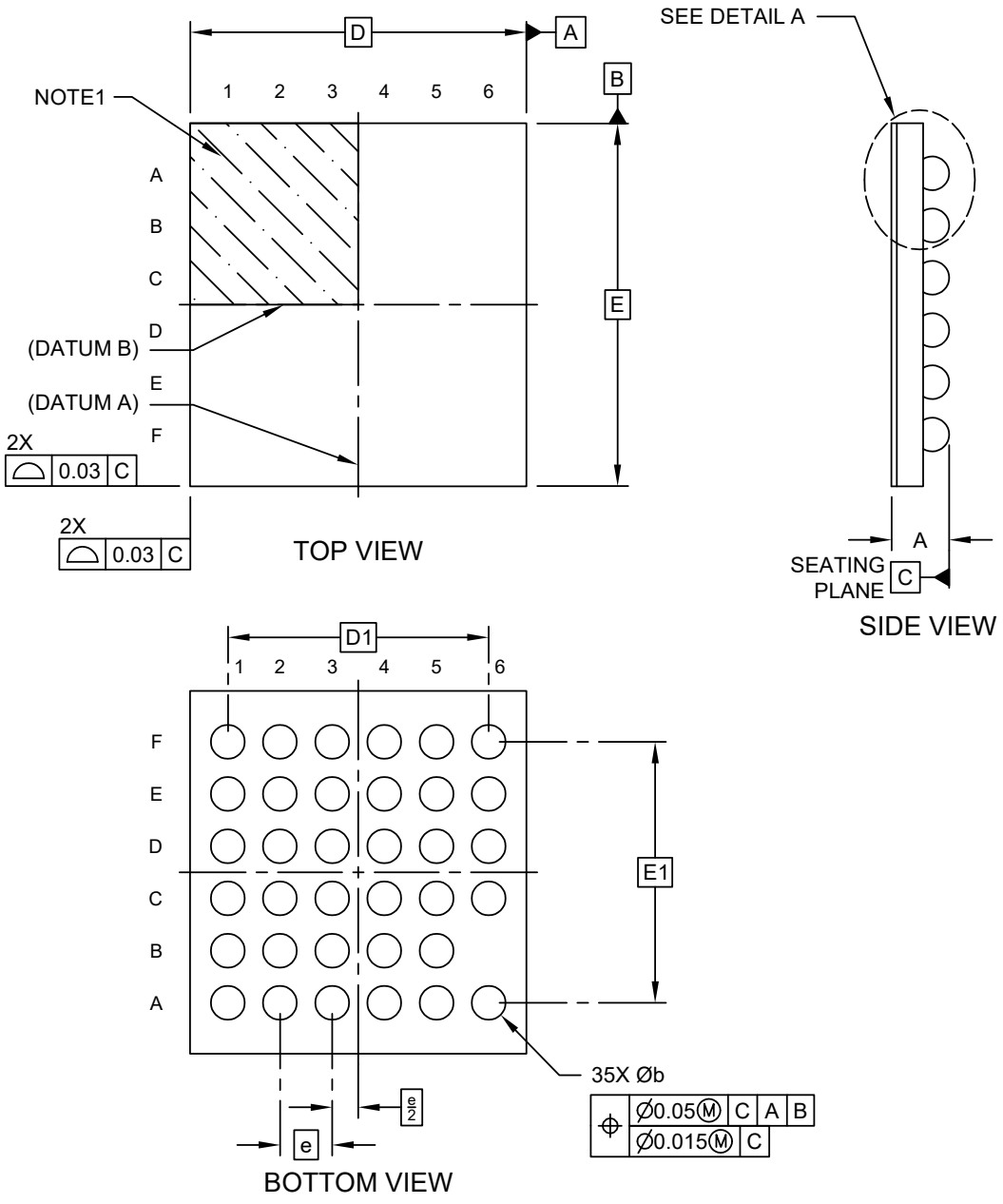

Microchip Technology Drawing C04-21492 Rev A Sheet 1 of 2

Downloaded from Arrow.com.

35-Ball Wafer Level Chip Scale Package (GFB) - 2.78x2.578x0.443 mm Body [WCLSP]
Atmel Global Package Code GJS

Note: For the most current package drawings, please see the Microchip Packaging Specification located at http://www.microchip.com/packaging

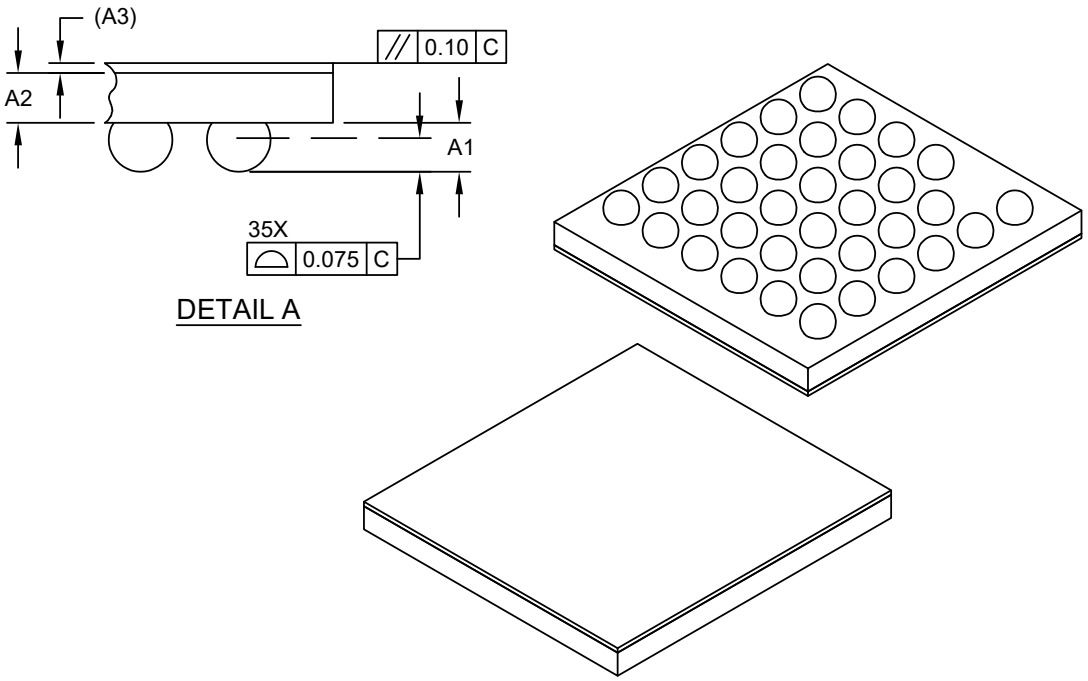

Units		MILLIMETERS		
Dimension Limits		MIN	NOM	MAX
Number of Terminals	N		35	
Pitch	e		0.40 BSC	
Overall Height	A	0.403	0.443	0.483
Bump Height	A1	0.17	–	0.23
Die Thickness	A2	0.178	0.203	0.228
Backside Coating	A3		0.04 REF	
Overall Length	D		2.578 BSC	
Overall Bump Pitch	D1		2.00 BSC	
Overall Width	E		2.78 BSC	
Overall Bump Pitch	E1		2.00 BSC	
Bump Diameter	b	0.23	0.26	0.29

Notes:

1. Pin 1 visual index feature may vary, but must be located within the hatched area.
2. Dimensioning and tolerancing per ASME Y14.5M
   BSC: Basic Dimension. Theoretically exact value shown without tolerances.
   REF: Reference Dimension, usually without tolerance, for information purposes only.

Microchip Technology Drawing C04-21492 Rev A Sheet 2 of 2

Downloaded from Arrow.com.

35-Ball Wafer Level Chip Scale Package (GFB) - 2.78x2.578x0.443 mm Body [WCLSP]
Atmel Global Package Code GJS

Note: For the most current package drawings, please see the Microchip Packaging Specification located at http://www.microchip.com/packaging

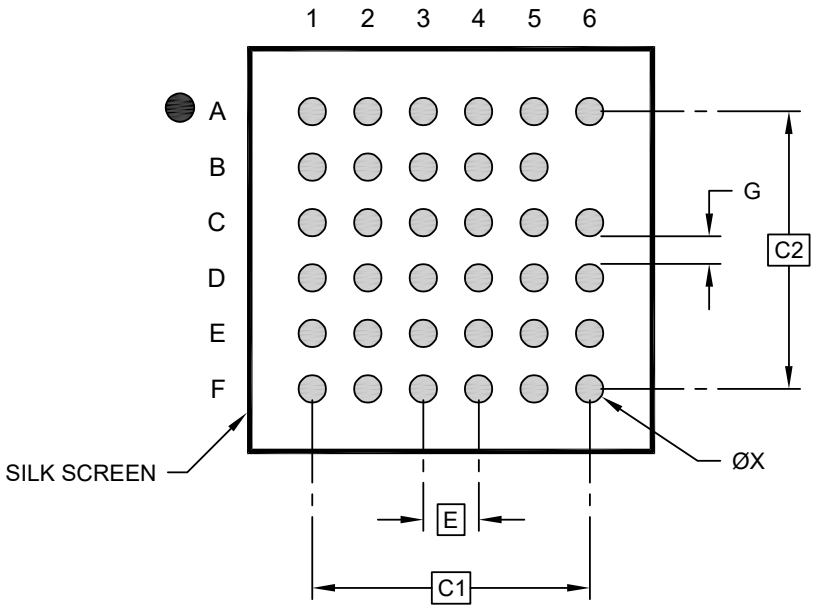

RECOMMENDED LAND PATTERN

Units		MILLIMETERS		
Dimension Limits		MIN	NOM	MAX
Contact Pitch	E		0.40 BSC	
Contact Pad Spacing	C1		2.00 BSC	
Contact Pad Spacing	C2		2.00 BSC	
Contact Pad Width	X			0.20
Contact Pad to Contact Pad (X35)	G	0.20		

Notes:

1. Dimensioning and tolerancing per ASME Y14.5M
   BSC: Basic Dimension. Theoretically exact value shown without tolerances.

Microchip Technology Drawing C04-23492 Rev A

Table 44-27. Device and Package Maximum Weight

6.22	mg

Downloaded from Arrow.com.

Table 44-28. Package Reference

JEDEC Drawing Reference	C04-21492
JESD97 Classification	e1

Downloaded from Arrow.com.

44.1.15 35 Ball WLCSP (Device Variant D)

35-Ball Wafer Level Chipscale Package (GUB) - 2.916x2.831 mm Body [WLCSP]

Note:	For the most current package drawings, please see the Microchip Packaging Specification located at http://www.microchip.com/packaging

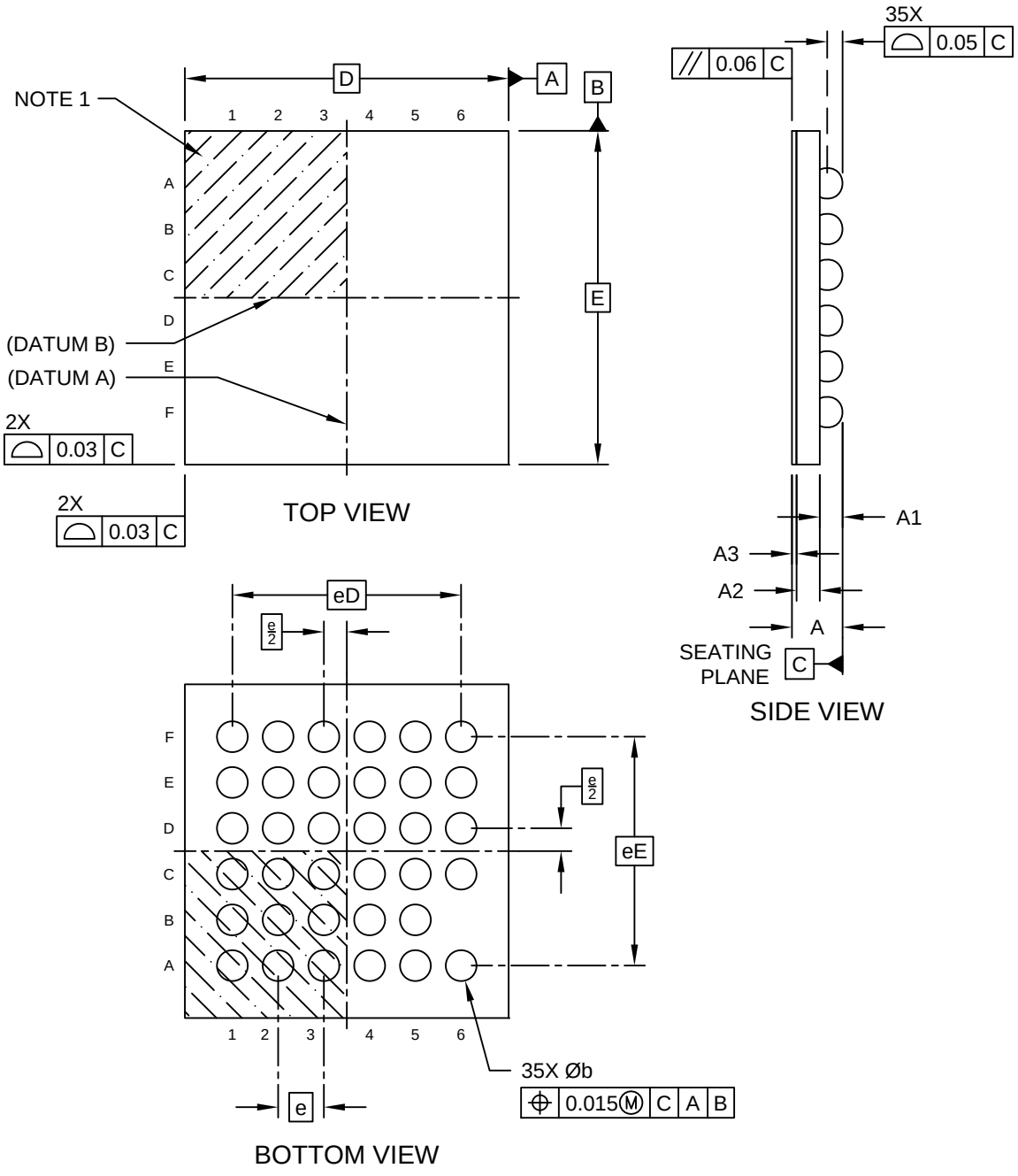

Microchip Technology Drawing C04-21491 Rev A Sheet 1 of 2

Downloaded from Arrow.com.

35-Ball Wafer Level Chipscale Package (GUB) - 2.916x2.831 mm Body [WLCSP]

Note: For the most current package drawings, please see the Microchip Packaging Specification located at http://www.microchip.com/packaging

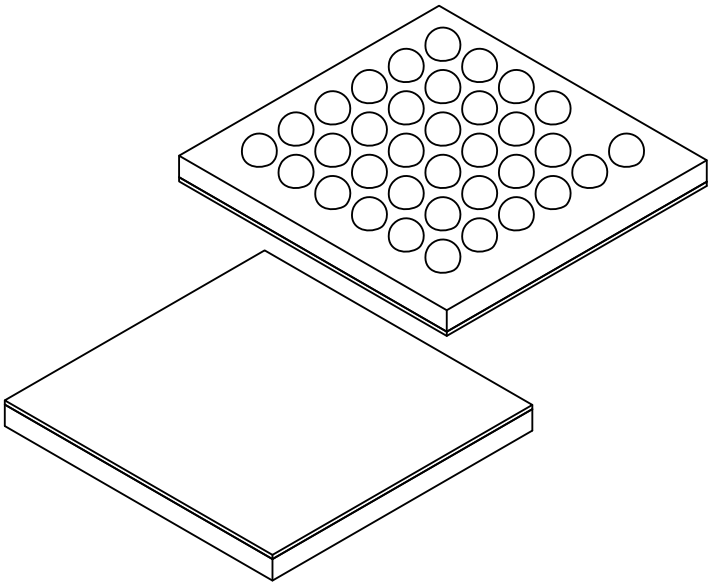

Units		MILLIMETERS		
Dimension Limits		MIN	NOM	MAX
Number of Terminals	N		35	
Pitch	e		0.40 BSC	
Overall Height	A	0.403	0.443	0.483
Ball Height	A1	0.17	0.20	0.23
Die Thickness	A2	0.178	0.203	0.228
Film Thickness	A3	0.036	0.040	0.044
Overall Length	D		2.831 BSC	
Overall Pitch	eD		2.00 BSC	
Overall Width	E		2.916 BSC	
Overall Pitch	eE		2.00 BSC	
Ball Diameter	b	0.24	0.27	0.30

Notes:

1. Pin 1 visual index feature may vary, but must be located within the hatched area.
2. Package is saw singulated
3. Dimensioning and tolerancing per ASME Y14.5M

   BSC: Basic Dimension. Theoretically exact value shown without tolerances.
   REF: Reference Dimension, usually without tolerance, for information purposes only.

Microchip Technology Drawing C04-21491 Rev A Sheet 2 of 2

Downloaded from Arrow.com.

35-Ball Wafer Level Chipscale Package (GUB) - 2.916x2.831 mm Body [WLCSP]

Note: For the most current package drawings, please see the Microchip Packaging Specification located at http://www.microchip.com/packaging

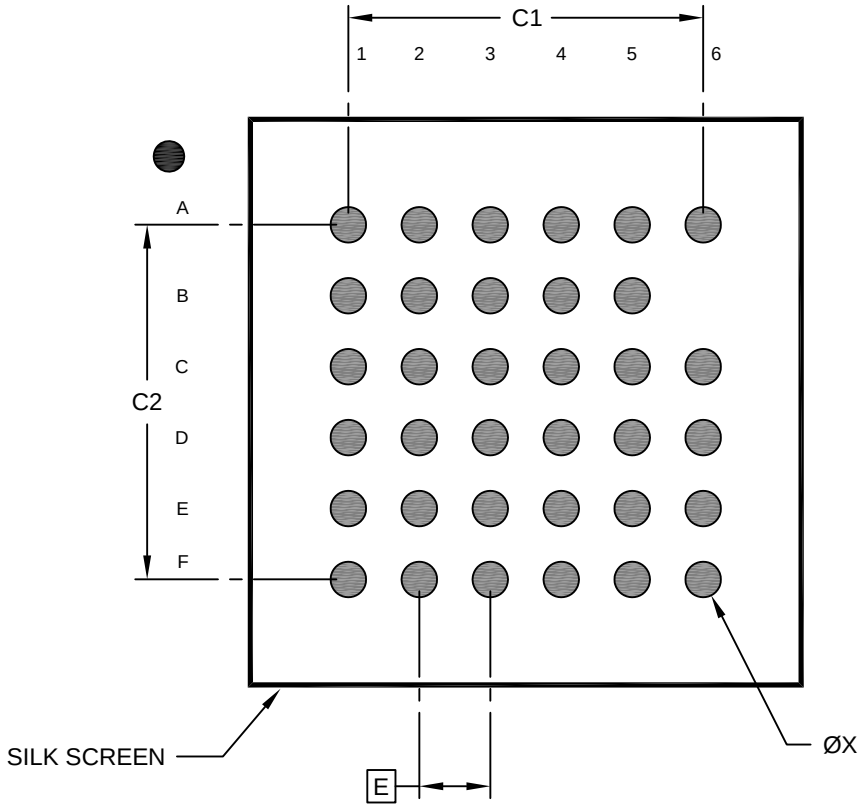

RECOMMENDED LAND PATTERN

Units		MILLIMETERS		
Dimension Limits		MIN	NOM	MAX
Contact Pitch	E	0.40 BSC		
Contact Pad Spacing	C1		2.00	
Contact Pad Spacing	C2		2.00	
Contact Pad Diameter (X35)	X			0.20

Notes:

1. Dimensioning and tolerancing per ASME Y14.5M

BSC: Basic Dimension. Theoretically exact value shown without tolerances.

Microchip Technology Drawing C04-23491 Rev A

Table 44-29. Device and Package Maximum Weight

5.98	mg

Downloaded from Arrow.com.

Table 44-30. Package Reference

JEDEC Drawing Reference	C04-21491
JESD97 Classification	e1

44.2 Soldering Profile

The following table gives the recommended soldering profile from J-STD-20.

Table 44-31. Recommended Soldering Profile

Profile Feature	Green Package
Average Ramp-up Rate (217°C to peak)	3°C/s max.
Preheat Temperature 175°C ±25°C	150-200°C
Time Maintained Above 217°C	60-150s
Time within 5°C of Actual Peak Temperature	30s
Peak Temperature Range	260°C
Ramp-down Rate	6°C/s max.
Time 25°C to Peak Temperature	8 minutes max.

A maximum of three reflow passes is allowed per component.

44.3 Package Markings

All devices are marked with the Atmel logo and the ordering code.

Additional marking is as follows:

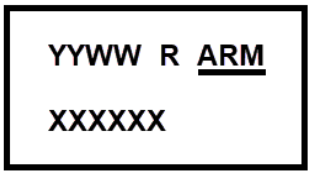

Where:

- “YY”: Manufacturing year
- “WW”: Manufacturing week
- “R”: Internal Code
- “XXXXXX”: Lot number

Downloaded from Arrow.com.

45. Schematic Checklist

45.1 Introduction

This chapter describes a common checklist which should be used when starting and reviewing the schematics for a SAM D21 design. This chapter illustrates a recommended power supply connection, how to connect external analog references, programmer, debugger, oscillator and crystal.

45.1.1 Operation in Noisy Environment

If the device is operating in an environment with much electromagnetic noise, it must be protected from this noise to ensure reliable operation. In addition to following best practice EMC design guidelines, the recommendations listed in the schematic checklist sections must be followed. In particular, placing decoupling capacitors very close to the power pins, an RC-filter on the $\overline{\text{RESET}}$ pin, and a pull-up resistor on the SWCLK pin is critical for reliable operations. It is also relevant to eliminate or attenuate noise in order to avoid that it reaches supply pins, I/O pins and crystals.

45.2 Power Supply

The SAM D21 supports a single power supply from 1.62V - 3.63V.

45.2.1 Power Supply Connections

Figure 45-1. Power Supply Schematic(1)

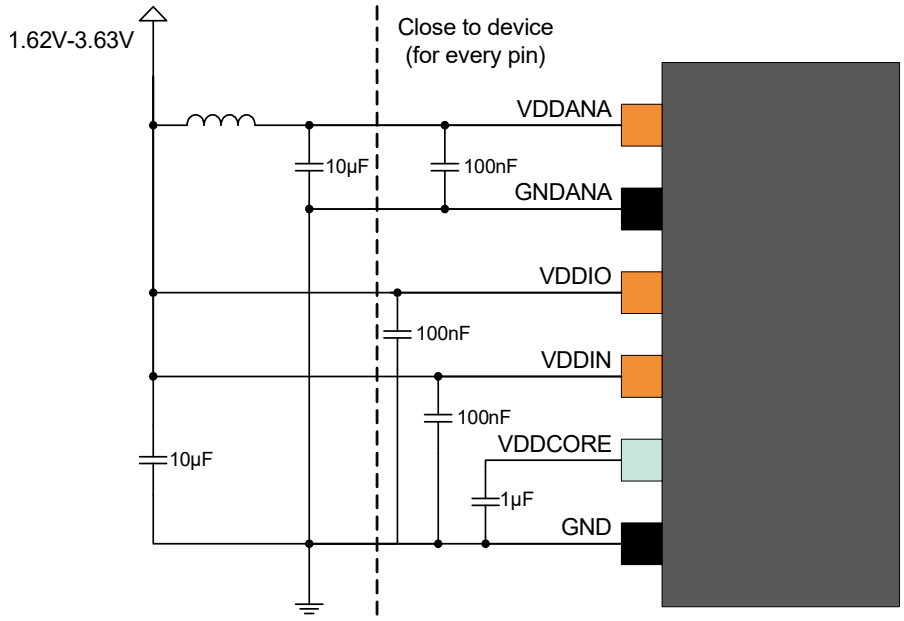

Note: 1. It is recommended to use a ceramic or solid tantalum capacitor with low ESR. Refer to table 37-18 in 37.11.1 Voltage Regulator Characteristics for additional details on ESR.

Table 45-1. Power Supply Connections, V_{DDCORE} From Internal Regulator

Signal Name	Recommended Pin Connection	Description
V_{DDIO}	1.62V - 3.63V Decoupling/filtering capacitors 100nF(1)(2) and 10µF(1) Decoupling/filtering inductor 10µH(1)(3)	Digital supply voltage

Downloaded from Arrow.com.

.....continued		
Signal Name	**Recommended Pin Connection**	**Description**
V_{DDANA}	1.62V - 3.63V Decoupling/filtering capacitors 100nF(1)(2) and 10µF(1) Ferrite bead(4) prevents the V_{DD} noise interfering the V_{DDANA}	Analog supply voltage
V_{DDCORE}	1.6V to 1.8V Decoupling/filtering capacitor 1µF(1)(2)	Core supply voltage / external decoupling pin
GND		Ground
GND_{ANA}		Ground for the analog power domain

Notes:

1. These values are only given as typical examples.
2. Decoupling capacitor should be placed close to the device for each supply pin pair in the signal group, low ESR caps should be used for better decoupling.
3. An inductor should be added between the external power and the V_{DD} for power filtering.
4. Ferrite bead has better filtering performance than the common inductor at high frequencies. It can be added between V_{DD} and V_{DDANA} for preventing digital noise from entering the analog power domain. The bead should provide enough impedance (e.g. 50Ω at 20MHz and 220Ω at 100MHz) for separating the digital power from the analog power domain. Make sure to select a ferrite bead designed for filtering applications with a low DC resistance to avoid a large voltage drop across the ferrite bead.

45.3 External Analog Reference Connections

The following schematic checklist is only necessary if the application is using one or more of the external analog references. If the internal references are used instead, the following circuits are not necessary.

Figure 45-2. External Analog Reference Schematic With Two References

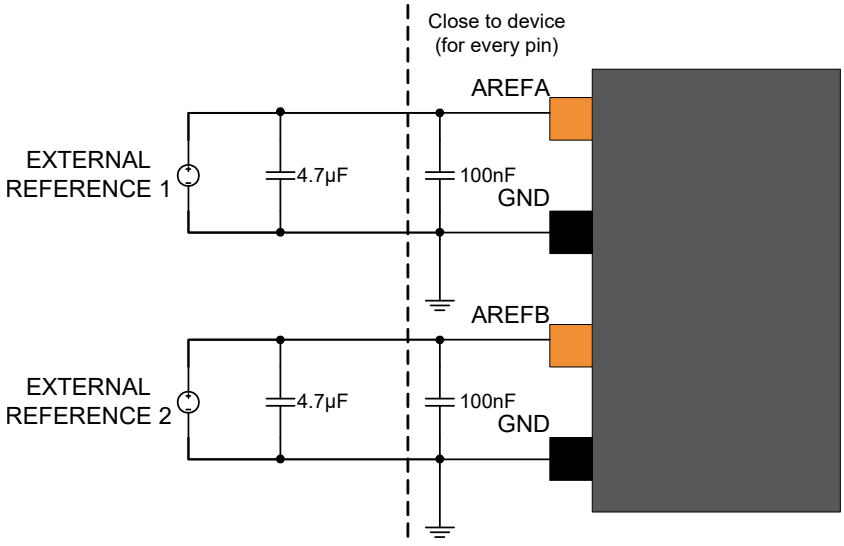

Downloaded from Arrow.com.

Figure 45-3. External Analog Reference Schematic With One Reference

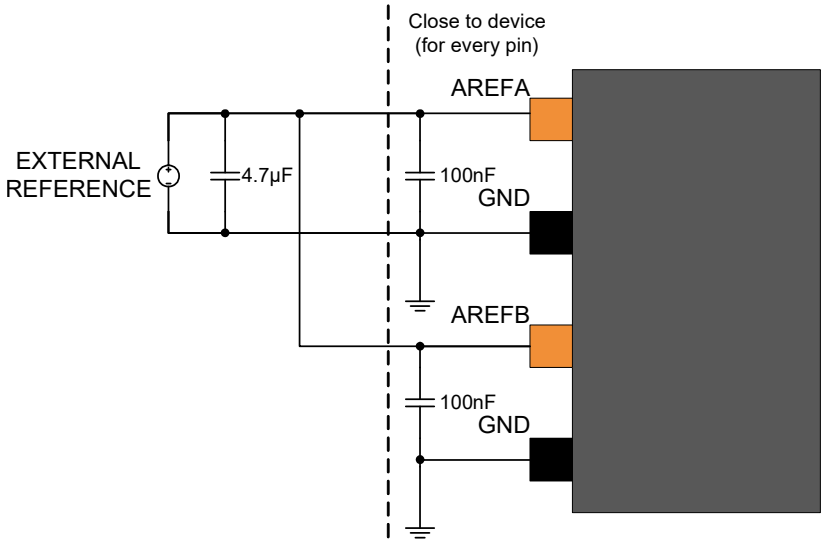

Table 45-2. External Analog Reference Connections

Signal Name	Recommended Pin Connection	Description
AREFx	1.0V to V_{DDANA} - 0.6V for ADC 1.0V to V_{DDANA}- 0.6V for DAC Decoupling/filtering capacitors 100nF(1)(2) and 4.7µF(1)	External reference from AREFx pin on the analog port
GND		Ground

1. These values are given as a typical example.
2. Decoupling capacitor should be placed close to the device for each supply pin pair in the signal group.

45.4 External Reset Circuit

The external Reset circuit is connected to the $\overline{\text{RESET}}$ pin when the external Reset function is used. The circuit is not necessary when the $\overline{\text{RESET}}$ pin is not driven low externally by the application circuitry.

The reset switch can also be removed, if a manual reset is not desired. The $\overline{\text{RESET}}$ pin itself has an internal pull-up resistor, hence it is optional to add any external pull-up resistor.

A pull-up resistor makes sure that the reset does not go low and unintentionally cause a device reset. An additional resistor has been added in series with the switch to safely discharge the filtering capacitor, that is, preventing a current surge when shorting the filtering capacitor, which again can cause a noise spike that can have a negative effect on the system.

Downloaded from Arrow.com.

Figure 45-4. External Reset Circuit Schematic

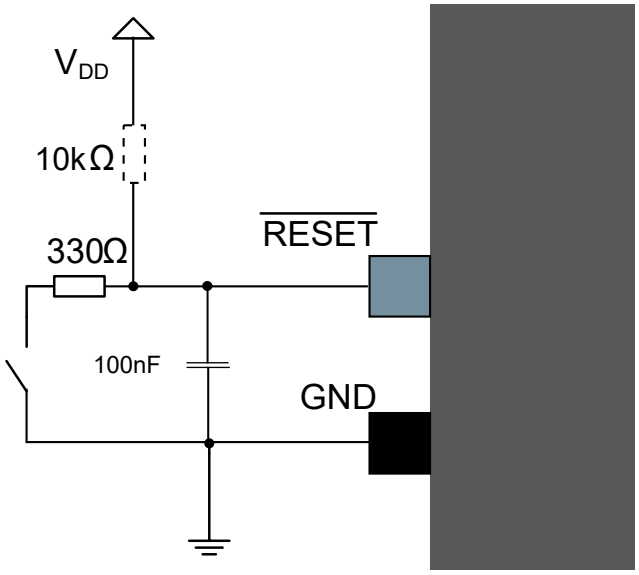

Figure 45-5. External Reset Circuit Schematic (EFT Immunity Enhancement)

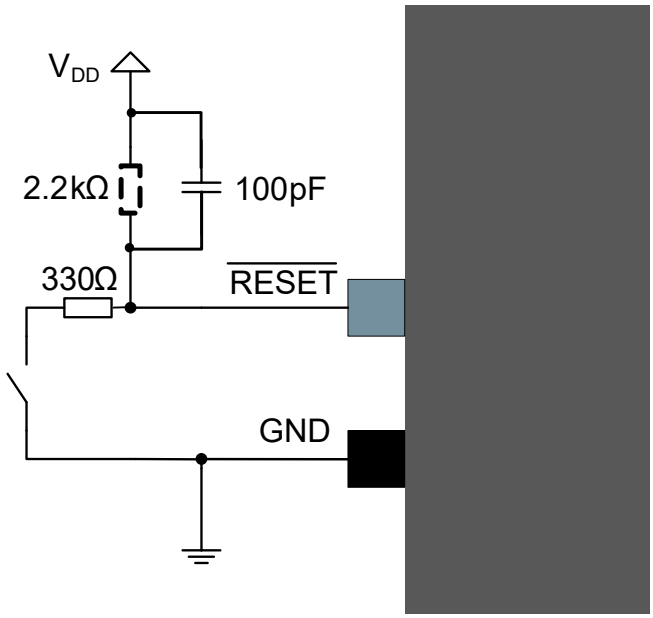

Note: This reset circuit is intended to improve EFT immunity, but does not filter low-frequency glitches, which makes it not suitable as an example for applications requiring debouncing on a reset button.

Table 45-3. Reset Circuit Connections

Signal Name	Recommended Pin Connection	Description
$\overline{\text{RESET}}$	Reset low-level threshold voltage V_{DDIO} = 1.6V - 2.0V: Below 0.33 * V_{DDIO} V_{DDIO} = 2.7V - 3.6V: Below 0.36 * V_{DDIO} Decoupling/filter capacitor 100 pF(1)Pull-up resistor 2.2 kΩ(1)(2)Resistor in series with the switch 330Ω(1)	Reset pin

1. These values are given as a typical example.

Downloaded from Arrow.com.

2. The SAM D21 features an internal pull-up resistor on the $\overline{\text{RESET}}$ pin, hence an external pull-up is optional.

45.5 Clocks and Crystal Oscillators

The SAM D21 can be run from internal or external clock sources, or a mix of internal and external sources. An example of usage will be to use the internal 8MHz oscillator as source for the system clock, and an external 32.768kHz watch crystal as clock source for the Real-Time counter (RTC).

45.5.1 External Clock Source

Figure 45-6. External Clock Source Example Schematic

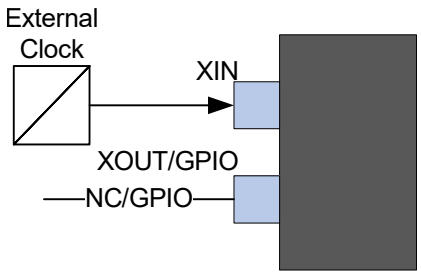

Table 45-4. External Clock Source Connections

Signal Name	Recommended Pin Connection	Description
XIN	XIN is used as input for an external clock signal	Input for inverting oscillator pin
XOUT/GPIO	Can be left unconnected or used as normal GPIO	

45.5.2 Crystal Oscillator

Figure 45-7. Crystal Oscillator Example Schematic

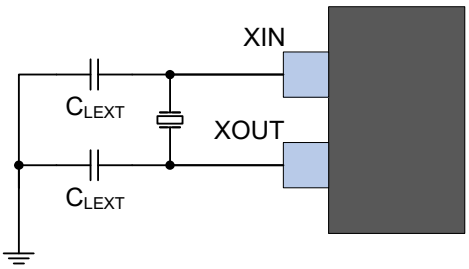

The crystal should be located as close to the device as possible. Long signal lines may cause a load too high to operate the crystal, and cause crosstalk to other parts of the system.

Table 45-5. Crystal Oscillator Checklist

Signal Name	Recommended Pin Connection	Description
XIN	Load capacitor C_{LEXT}(1)(2)	External crystal between 0.4 to 30 MHz
XOUT	Load capacitor C_{LEXT}(1)(2)	

1. Use the equation in Crystal Oscillator Characteristics to calculate C_{LEXT}.
2. Decoupling capacitor should be placed close to the device for each supply pin pair in the signal group.

45.5.3 External Real Time Oscillator

The low-frequency crystal oscillator is optimized for use with a 32.768 kHz watch crystal. When selecting crystals, load capacitance and crystal's Equivalent Series Resistance (ESR) must be taken into consideration. Both values are specified by the crystal vendor.

Downloaded from Arrow.com.

The SAM D21 oscillator is optimized for very-low-power consumption, so pay close attention when selecting crystals. See the table below for maximum ESR recommendations on 9pF and 12.5pF crystals.

The low-frequency crystal oscillator provides an internal load capacitance of typical values available in Table , *32 kHz Crystal Oscillator Characteristics*. This internal load capacitance and PCB capacitance can use a crystal inferior to 12.5pF load capacitance without external capacitors as shown in the following figure.

Table 45-6. Maximum ESR Recommendation for 32.768 kHz Crystal

Crystal C_L (pF)	Max ESR [kΩ]
12.5	313

Note: Maximum ESR is typical value based on characterization. These values are not covered by test limits in production.

Figure 45-8. External Real Time Oscillator without Load Capacitor

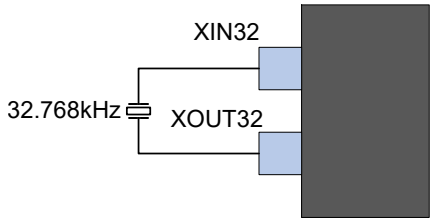

However, to improve crystal accuracy and safety factor, the data sheet recommends adding external capacitors as shown in the next figure.

To find suitable load capacitance for a 32.768 kHz crystal, consult the crystal data sheet.

Figure 45-9. External Real Time Oscillator with Load Capacitor

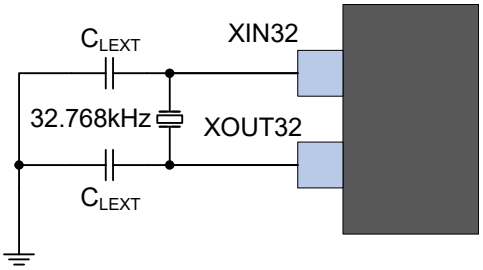

Table 45-7. External Real Time Oscillator Checklist

Signal Name	Recommended Pin Connection	Description
XIN32	Load capacitor C_{LEXT}(1)(2)	Timer oscillator input
XOUT32	Load capacitor C_{LEXT}(1)(2)	Timer oscillator output

1. Use the equation in Crystal Oscillator Characteristics to calculate C_{LEXT}.
2. Decoupling capacitor should be placed close to the device for each supply pin pair in the signal group.

Note:
In order to minimize the cycle-to-cycle jitter of the external oscillator, keep the neighboring pins as steady as possible. For neighboring pin details, refer to the Oscillator Pinout section.

Related Links

7.2.1 Oscillator Pinout
37.13 Oscillators Characteristics

45.5.4 Calculating the Correct Crystal Decoupling Capacitor

In order to calculate correct load capacitor for a given crystal, refer to Oscillator Characteristics for parasitic load capacitance values and equation to calculate C_{LEXT}.

Downloaded from Arrow.com.

45.6 Unused or Unconnected Pins

For unused pins, the default state of the pins for the will provide the lowest current leakage. There is no need to do any configuration of the unused pins in order to lower the power consumption.

45.7 Programming and Debug Ports

For programming and/or debugging the SAM D21 the device should be connected using the Serial Wire Debug, SWD, interface. Currently the SWD interface is supported by several Microchip and third party programmers and debuggers, like the JTAGICE3, SAM-ICE, ATMEL_ICE or SAM D21 Xplained Pro (SAM D21 evaluation kit) Embedded Debugger.

Refer to the JTAGICE3, SAM-ICE, ATMEL_ICE or SAM D21 Xplained Pro user guides for details on debugging and programming connections and options. For connecting to any other programming or debugging tool, refer to that specific programmer or debugger's user guide.

The SAM D21 Xplained Pro evaluation board for the SAM D21 supports programming and debugging through the onboard embedded debugger so no external programmer or debugger is needed.

Note that a pull-up resistor on the SWCLK pin is critical for reliable operations. Refer to related link for more information.

Figure 45-10. SWCLK Circuit Connections

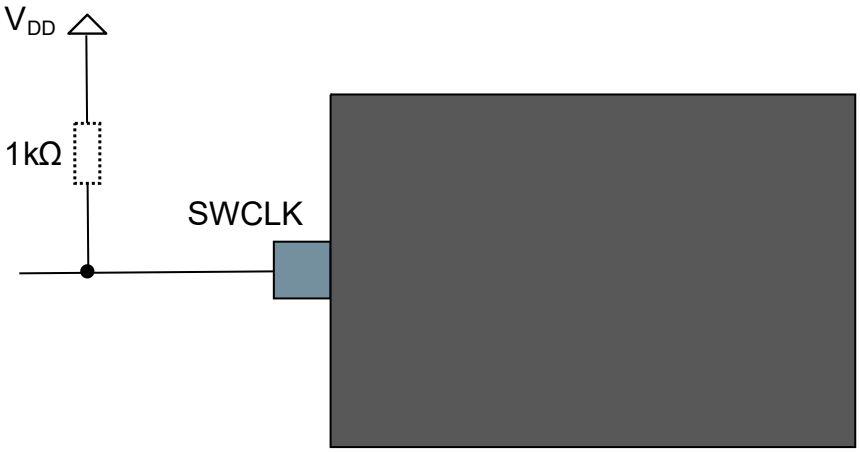

Table 45-8. SWCLK Circuit Connections

Pin Name	Description	Recommended Pin Connection
SWCLK	Serial wire clock pin	Pull-up resistor 1kΩ

Related Links

45.1.1 Operation in Noisy Environment

45.7.1 Cortex Debug Connector (10-pin)

For debuggers and/or programmers that support the Cortex Debug Connector (10-pin) interface the signals should be connected as shown in the figure below with details described in the next table.

Downloaded from Arrow.com.

Figure 45-11. Cortex Debug Connector (10-pin)

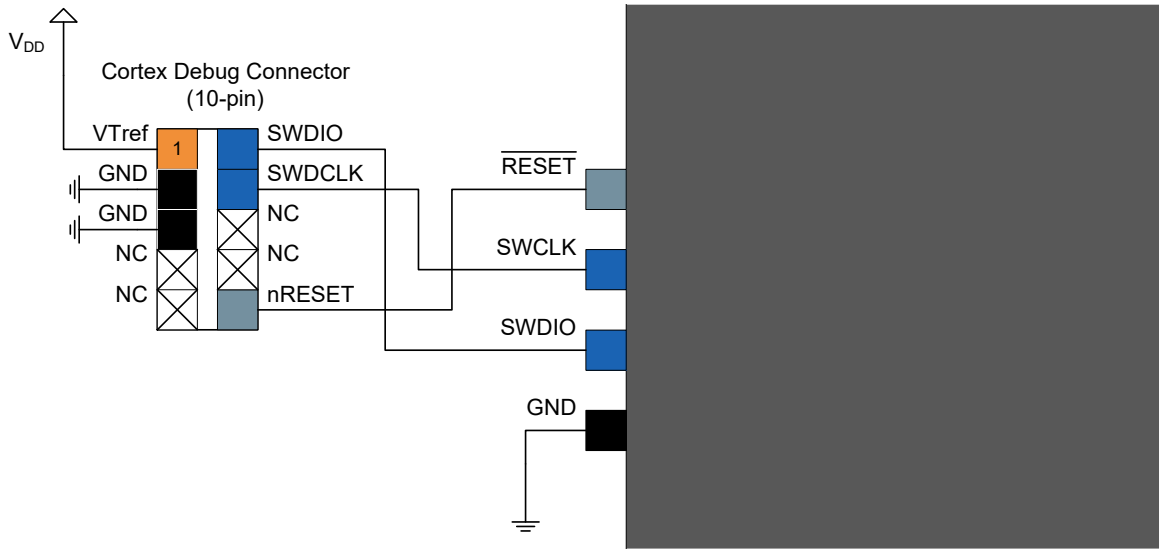

Table 45-9. Cortex Debug Connector (10-pin)

Header Signal Name	Description	Recommended Pin Connection
SWDCLK	Serial wire clock pin	Pull-up resistor 1kΩ
SWDIO	Serial wire bidirectional data pin	
$\overline{\text{RESET}}$	Target device reset pin, active low Refer to 45.4 External Reset Circuit.	
VTref	Target voltage sense, should be connected to the device V_{DD}	
GND	Ground	

45.7.2 10-pin JTAGICE3 Compatible Serial Wire Debug Interface

The JTAGICE3 debugger and programmer does not support the Cortex Debug Connector (10-pin) directly, hence a special pinout is needed to directly connect the SAM D21 to the JTAGICE3, alternatively one can use the JTAGICE3 squid cable and manually match the signals between the JTAGICE3 and SAM D21. The following figure describes how to connect a 10-pin header that support connecting the JTAGICE3 directly to the SAM D21 without the need for a squid cable.

To connect the JTAGICE3 programmer and debugger to the SAM D21, one can either use the JTAGICE3 squid cable, or use a 10-pin connector as shown in the figure below with details given in the next table to connect to the target using the JTAGICE3 50 mil cable directly.

Downloaded from Arrow.com.

Figure 45-12. 10-pin JTAGICE3 Compatible Serial Wire Debug Interface

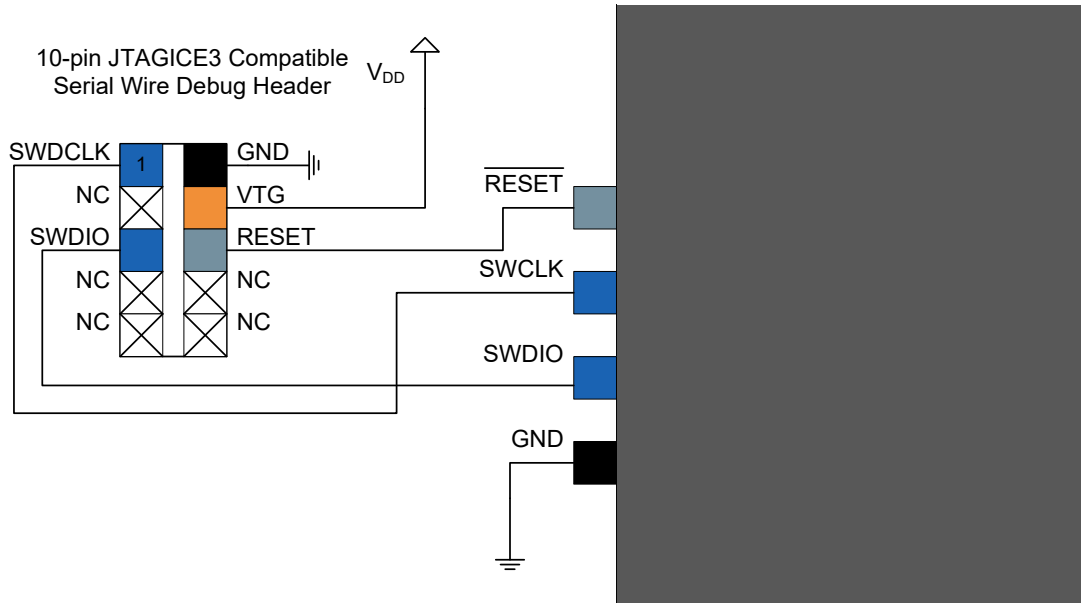

Table 45-10. 10-pin JTAGICE3 Compatible Serial Wire Debug Interface

Header Signal Name	Description
SWDCLK	Serial wire clock pin
SWDIO	Serial wire bidirectional data pin
$\overline{\text{RESET}}$	Target device reset pin, active low
VTG	Target voltage sense, should be connected to the device V_{DD}
GND	Ground

45.7.3 20-pin IDC JTAG Connector

For debuggers and/or programmers that support the 20-pin IDC JTAG Connector, e.g. the SAM-ICE, the signals should be connected as shown in the next figure with details described in the table.

Downloaded from Arrow.com.

Figure 45-13. 20-pin IDC JTAG Connector

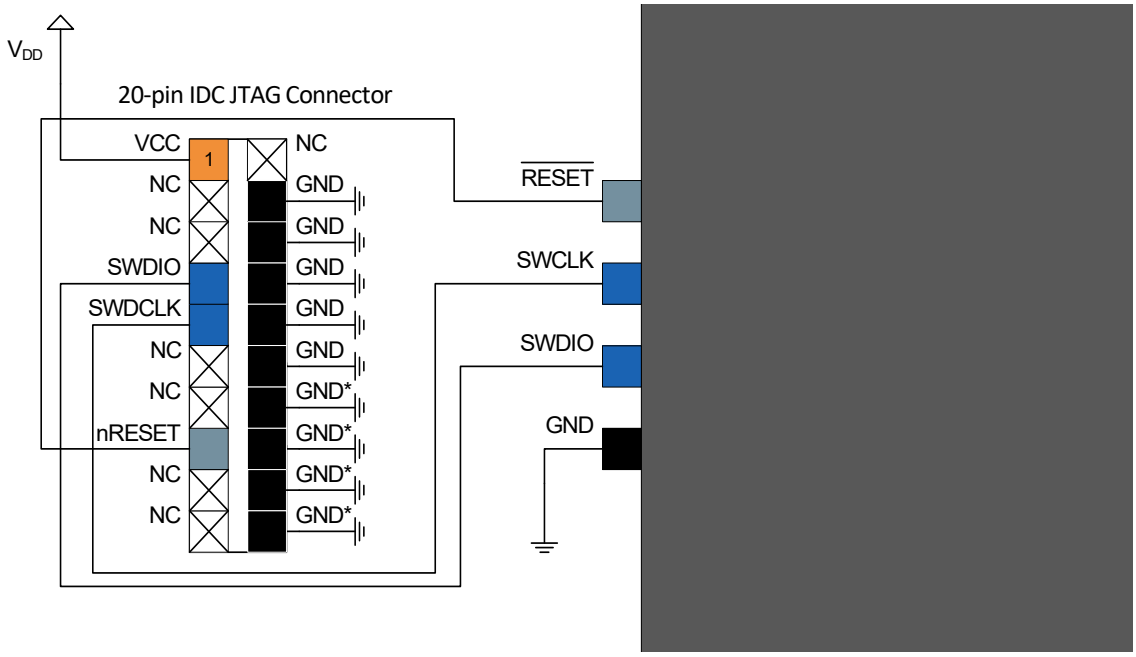

Table 45-11. 20-pin IDC JTAG Connector

Header Signal Name	Description
SWDCLK	Serial wire clock pin
SWDIO	Serial wire bidirectional data pin
$\overline{\text{RESET}}$	Target device reset pin, active low
VCC	Target voltage sense, should be connected to the device V_{DD}
GND	Ground
GND*	These pins are reserved for firmware extension purposes. They can be left open or connected to GND in normal debug environment. They are not essential for SWD in general.

45.8 USB Interface

The USB interface consists of a differential data pair (D+/D-) and a power supply (VBUS, GND). Refer to the Electrical Characteristics for operating voltages which will allow USB operation.

Table 45-12. USB Interface Checklist

Signal Name	Recommended Pin Connection	Description
D+	• The impedance of the pair should be matched on the PCB to minimize reflections. • USB differential tracks should be routed with the same characteristics (length, width, number of vias, etc.) • Signals should be routed as parallel as possible, with a minimum number of angles and vias	USB full speed / low speed positive data upstream pin
D-		USB full speed / low speed negative data upstream pin

Downloaded from Arrow.com.

Figure 45-14. Low Cost USB Interface Example Schematic

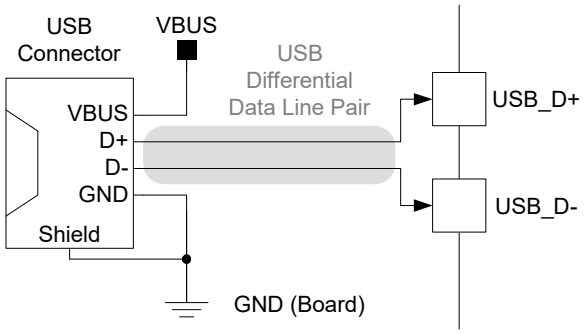

It is recommended to increase ESD protection on the USB D+, D-, and VBUS lines using dedicated transient suppressors. These protections should be located as close as possible to the USB connector to reduce the potential discharge path and reduce discharge propagation within the entire system.

The USB FS cable includes a dedicated shield wire that should be connected to the board with caution. Special attention should be paid to the connection between the board ground plane and the shield from the USB connector and the cable.

Tying the shield directly to ground would create a direct path from the ground plane to the shield, turning the USB cable into an antenna. To limit the USB cable antenna effect, it is recommended to connect the shield and ground through an RC filter.

Figure 45-15. Protected USB Interface Example Schematic

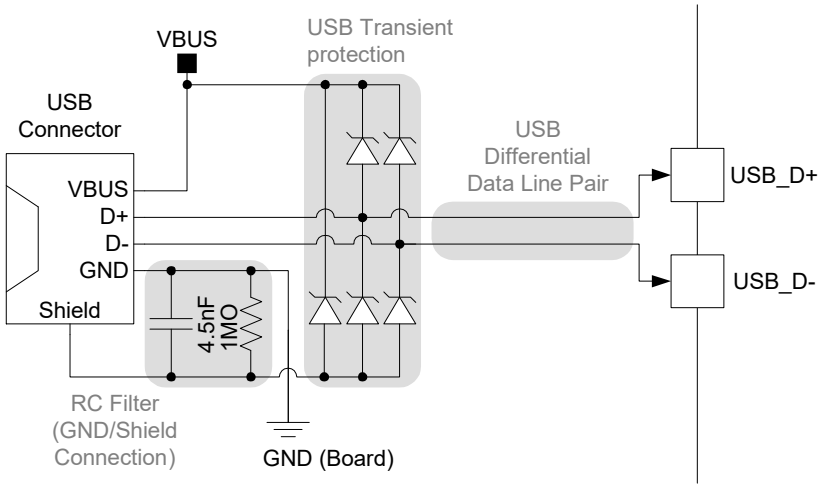

Downloaded from Arrow.com.

46. Conventions

46.1 Numerical Notation

Table 46-1. Numerical Notation

Symbol	Description
165	Decimal number
0b0101	Binary number (example 0b0101 = 5 decimal)
'0101'	Binary numbers are given without prefix if unambiguous
0x3B24	Hexadecimal number
X	Represents an unknown or don't care value
Z	Represents a high-impedance (floating) state for either a signal or a bus

46.2 Memory Size and Type

Table 46-2. Memory Size and Bit Rate

Symbol	Description
KB (kbyte)	kilobyte (2^{10} = 1024)
MB (Mbyte)	megabyte (2^{20} = 1024*1024)
GB (Gbyte)	gigabyte (2^{30} = 1024*1024*1024)
b	bit (binary '0' or '1')
B	byte (8 bits)
1kbit/s	1,000 bit/s rate (not 1,024 bit/s)
1Mbit/s	1,000,000 bit/s rate
1Gbit/s	1,000,000,000 bit/s rate
word	32 bit
half-word	16 bit

46.3 Frequency and Time

Table 46-3. Frequency and Time

Symbol	Description
kHz	1 kHz = 10^3 Hz = 1,000 Hz
KHz	1 KHz = 1,024 Hz, 32 KHz = 32,768 Hz
MHz	1 MHz = 10^6 Hz = 1,000,000 Hz
GHz	1 GHz = 10^9 Hz = 1,000,000,000 Hz
s	second

Downloaded from Arrow.com.

.....continued	
Symbol	**Description**
ms	millisecond
µs	microsecond
ns	nanosecond

46.4 Registers and Bits

Table 46-4. Register and Bit Mnemonics

Symbol	Description
R/W	Read/Write accessible register bit. The user can read from and write to this bit.
R	Read-only accessible register bit. The user can only read this bit. Writes will be ignored.
W	Write-only accessible register bit. The user can only write this bit. Reading this bit will return an undefined value.
BIT	Bit names are shown in uppercase. (Example ENABLE)
FIELD[n:m]	A set of bits from bit n down to m. (Example: PINA[3:0] = {PINA3, PINA2, PINA1, PINA0}
Reserved	Reserved bits are unused and reserved for future use. For compatibility with future devices, always write reserved bits to zero when the register is written. Reserved bits will always return zero when read. Reserved bit field values must not be written to a bit field. A reserved value will not be read from a read-only bit field.
PERIPHERAL*i*	If several instances of a peripheral exist, the peripheral name is followed by a number to indicate the number of the instance in the range 0-n. PERIPHERAL0 denotes one specific instance.
Reset	Value of a register after a power Reset. This is also the value of registers in a peripheral after performing a software Reset of the peripheral, except for the Debug Control registers.
SET/CLR	Registers with SET/CLR suffix allows the user to clear and set bits in a register without doing a read-modify-write operation. These registers always come in pairs. Writing a ‘1’ to a bit in the CLR register will clear the corresponding bit in both registers, while writing a ‘1’ to a bit in the SET register will set the corresponding bit in both registers. Both registers will return the same value when read. If both registers are written simultaneously, the write to the CLR register will take precedence.

Downloaded from Arrow.com.

47. Acronyms and Abbreviations

The below table contains acronyms and abbreviations used in this document.

Table 47-1. Acronyms and Abbreviations

Abbreviation	Description
AC	Analog Comparator
ADC	Analog-to-Digital Converter
ADDR	Address
AES	Advanced Encryption Standard
AHB	Advanced High-performance Bus
AMBA®	Advanced Microcontroller Bus Architecture
APB	AMBA Advanced Peripheral Bus
AREF	Analog reference voltage
BLB	Boot Lock Bit
BOD	Brown-out Detector
CAL	Calibration
CC	Compare/Capture
CCL	Configurable Custom Logic
CLK	Clock
CRC	Cyclic Redundancy Check
CTRL	Control
DAC	Digital-to-Analog Converter
DAP	Debug Access Port
DFLL	Digital Frequency Locked Loop
DPLL	Digital Phase Locked Loop
DMAC	DMA (Direct Memory Access) Controller
DSU	Device Service Unit
EEPROM	Electrically Erasable Programmable Read-Only Memory
EIC	External Interrupt Controller
EVSYS	Event System
FDPLL	Fractional Digital Phase Locked Loop, also DPLL
GCLK	Generic Clock Controller
GND	Ground
GPIO	General Purpose Input/Output
I^2C	Inter-Integrated Circuit
IF	Interrupt flag
INT	Interrupt

Downloaded from Arrow.com.

.....continued

Abbreviation	Description
MBIST	Memory built-in self-test
MEM-AP	Memory Access Port
MTB	Micro Trace Buffer
NMI	Non-maskable interrupt
NVIC	Nested Vector Interrupt Controller
NVM	Non-Volatile Memory
NVMCTRL	Non-Volatile Memory Controller
OSC	Oscillator
PAC	Peripheral Access Controller
PC	Program Counter
PER	Period
PM	Power Manager
POR	Power-on reset
PORT	I/O Pin Controller
PTC	Peripheral Touch Controller
PWM	Pulse Width Modulation
RAM	Random-Access Memory
REF	Reference
RTC	Real-Time Counter
RX	Receiver/Receive
SEEP	SmartEEPROM Page
SERCOM	Serial Communication Interface
SMBus™	System Management Bus
SP	Stack Pointer
SPI	Serial Peripheral Interface
SRAM	Static Random-Access Memory
SUPC	Supply Controller
SWD	Serial Wire Debug
TC	Timer/Counter
TCC	Timer/Counter for Control Applications
TRNG	True Random Number Generator
TX	Transmitter/Transmit
ULP	Ultra low-power
USART	Universal Synchronous and Asynchronous Serial Receiver and Transmitter
USB	Universal Serial Bus

Downloaded from Arrow.com.

.....continued

Abbreviation	Description
V_{DD}	Common voltage to be applied to VDDIO, VDDIN and VDDANA
V_{DDIN}	Digital supply voltage
V_{DDIO}	Digital supply voltage
V_{DDANA}	Analog supply voltage
VREF	Voltage reference
WDT	Watchdog Timer
XOSC	Crystal Oscillator

Downloaded from Arrow.com.

48. Data Sheet Revision History

Page numbers listed in this section refer to this document. The revision listed in this section refers to the document revision.

48.1 Revision H - September 2021

Section	Description
SYSCTRL	Removed erroneous text from the DFLLRDY bitfield of the PCLKSR Register.
DMAC	Removed non-applicable text from Burst Transfer in DMA.
TCC	Updated the number of TCC Instances in Overview.
ADC	Updated the Equations in Prescaler for Single-Shot and Free-Running Modes.
AC	Added a new paragraph to Overview for L-Variant devices.
DAC	Updated Synchronization to reflect that no bits need synchronization.
Electrical Characteristics at 85°C	• Updated the POR Operating Principle figure to properly reflect an Internal RESET in Power-On-Reset (POR) Characteristics • Updated the following figures in BOD33 to properly display the Internal RESET: – BOD33 Hysteresis OFF – BOD33 Hysteresis ON • Removed erroneous SS line from the SPI Timing Requirements in Host Mode figure in SERCOM in SPI Mode Timing
SAM DA1 Electrical Characteristics at 105°C	Updated the values in the BOD33 LEVEL Value table in BOD33.
Appendix B	Updated Ordering Information with a new table reflecting all ISELED parts.
Packaging Information	Updated the following packages with a new note: • 64-Pin VQFN • 48-Pin VQFN Added the following package: • 64-Lead VQFN

48.2 Revision G - April 2021

This revision includes the updates as listed in the following table, and numerous typographical corrections throughout the document.

Section	Description
General	The SPI, I^2S, and I^2C standards use the terminology "Master" and "Slave". The equivalent Microchip terminology used in this document is "Host" and "Client" respectively. These terms have been updated throughout this document for this revision.
Features	Updated RWW to RWWEE for Memories
Ordering Information	Updated RWW to RWWEE in the Device Variant description

Downloaded from Arrow.com.

.....continued

Section	Description
Pinout	Updated the following Pinouts to accurately display the $\overline{\text{RESET}}$ pin • QFN48 • QFN32 / TQFP32 • UFBGA64 • WLCSP45 • WLCSP35
I/O Multiplexing	• Added a new notes to table 7-1 for SERCOM and TCC3 availability • Added a new note to table 7-2 for TCC3 availability • Removed erroneous text from the header of Table 7-5 in SERCOM I^2C Pins
Product Mapping	Updated RWW to RWWEE in the figure
Memories	• Updated EEPROM and RWWEE text in Embedded Memories • Updated RWW to RWWEE in all the tables in Physical Memory Map • Updated Table 10-7 in NVM User Row Mapping to display text for Emulation
Processor and Architecture	• Updated the Addresses of the bits in SRAM Quality of Service • Updated the following registers, changing clear to set: – PCA0 Register WPSET – PCA1 Register WPSET – PCA2 Register WPSET
DSU	• Added verbiage for RWWEE Emulation to Chip Erase • Updated table 13-3 in 32-bit Cyclic Redundancy Check CRC32 with proper capitalization on Emulation • Updated table 13-6 in System Services Availability when Accessed Externally and Device is Protected with the correct RWWEE verbiage • Updated the DEVSEL bit of the DID Register with information for Device identification
Clock System	Updated Read Request with new verbiage for the READREQ.RCONT and READREQ.RREQ bits
GCLK	Updated the GENDIV Register with a new Register property, and added a new column for the Maximum Division Factor to the table for the DIV bit.
SYSCTRL	• Updated the following registers: – XOSC with new verbiage for the AMPGC and GAIN bits – DFLLCTRL - removed erroneous RUNSTDBY bit
RTC	Updated the Overview with new verbiage for clock sources selectable through the GCLK.
DMAC	• Updated the following registers: – BASEADDR with new text for the bitfield BASEADDR – WRBADDR with new text for the bitfield WRBADDR – SRCADDR with new text for the bitfield SRCADDR – DSTADDR with new text for the bitfield DSTADDR – DESCADDR bitfield was updated for 64 bit alignment in the DESCADDR register
EIC	Updated the EXTINTx bit of the INTENCLR register to read “disables the external interrupt.”

Downloaded from Arrow.com.

.....continued

Section	Description
NVMCTRL	• Updated the Overview with new text for the EEPROM Emulation array • Updated Memory Organization with new EEPROM Emulation verbiage • Updated NVM User Configuration with new EEPROM Emulation verbiage • Updated the following registers: – PARAM – The ADDR bit of the ADDR Register was updated with new verbiage – The LOCK bit of the LOCK Register was updated with the correct reset value
EVSYS	• Updated Features with new event user verbiage • Updated the CHSTATUS Register with a new Reset value for the USRRDY bitfield
SERCOM I^2C	• Updated the Signal Description with a cross reference to the proper I/O Multiplexing table • In DMA, Interrupts and Events, erroneous information referring to the TX FIFO and RX FIFO was removed from table 28-1 and table 28-2 • In Interrupts erroneous information regarding the RX FIFO and TX FIFO was removed • Updated the SYNCBUSY Register to remove the SYSOP bitfield • Updated the DATA Register with a new register Property and added a note to the DATA Bitfield
I^2S	Added new slotsize information to PDM Reception.
TC	Updated the RCONT bit of the READREQ Register with new verbiage for clearing and reading the RREQ and RCONT bits.
USB	Updated the SPEED Bitfield of the STATUS Register with the proper allocation of low-speed and full-speed mode.
ADC	• Updated the Block Diagram to properly display INTVCC0/1, and updated the note • Updated the Note for the REFSEL bit of the REFCTRL Register
DAC	Updated the CTRLB Register with a new note for the REFSEL bitfield.
Electrical Characteristics at 85°C	• In Maximum Clock Frequencies, table 37-7 was updated with a new maximum specification and units for the DAC input clock frequency • The POR Operating Principle figure in Power-On Reset (POR) Characteristics was updated to properly display the $\overline{\text{RESET}}$ designation • Analog-to-Digital (ADC) Characteristics had numerous updates with new symbol values and new rows added to the following tables: – 37-24 – 37-25 – 37-26 • Digital to Analog Converter (DAC) Characteristics had numerous updates to merge cells, add new parameter values, and notes to the following tables: – 37-32 – 37-34 – 37-35 • Updated table 37-38 in Bandgap and Internal 1.0V Reference Characteristics with new symbol values

Downloaded from Arrow.com.

.....continued

Section	Description
Electrical Characteristics at 105°C	• In Maximum Clock Frequencies, table 38-4 was updated with a new maximum specification and units for the DAC input clock frequency • The POR Operating Principle figure in Power-On Reset (POR) Characteristics was updated to properly display the $\overline{\text{RESET}}$ designation • Analog-to-Digital (ADC) Characteristics had numerous updates with new symbol values and new rows added to the following tables: – 38-10 – 38-11 – 38-12 • Updated table 38-14 in Performance with the Hardware Offset and Gain Correction by applying the Conditions value to the whole column • Digital to Analog Converter (DAC) Characteristics had numerous updates to merge cells, add new parameter values, and notes to the following tables: – 38-15 – 38-16 – 38-17
Electrical Specifications at 125°C	• In Maximum Clock Frequencies, table 39-4 was updated with a new maximum specification and units for the DAC input clock frequency • The POR Operating Principle figure in Power-On Reset (POR) Characteristics was updated to properly display the $\overline{\text{RESET}}$ designation • Analog-to-Digital (ADC) Characteristics had numerous updates with new symbol values and new rows added to the following tables: – 39-13 – 39-14 – 39-15 – 39-16 – 39-17 – 39-18 • Digital to Analog Converter (DAC) Characteristics had numerous updates to merge cells, add new parameter values, and notes to the following tables: – 39-19 – 39-20 – 39-22 – 39-23

Downloaded from Arrow.com.

.....continued

Section	Description
AEC-Q100 125°C Specifications	• In Maximum Clock Frequencies, table 40-7 and 40-9 was updated with a new maximum specification and units for the DAC input clock frequency • The POR Operating Principle figure in Power-On Reset (POR) Characteristics was updated to properly display the $\overline{\text{RESET}}$ designation • Analog-to-Digital (ADC) Characteristics had numerous updates with new symbol values and new rows added to the following tables: – 40-24 – 40-25 – 40-26 – 40-27 • Digital to Analog Converter (DAC) Characteristics had numerous updates to merge cells, add new parameter values, and notes to the following tables: – 40-30 – 40-32 – 40-33 • Updated table 40-36 in Bandgap and Internal 1.0V Reference Characteristics with new symbol values
SAM DA1 Electrical Characteristics	• In Maximum Clock Frequencies, table 41-6 was updated with a new maximum specification and units for the DAC input clock frequency • The POR Operating Principle figure in Power-On Reset (POR) Characteristics was updated to properly display the $\overline{\text{RESET}}$ designation • Analog-to-Digital (ADC) Characteristics had numerous updates with new symbol values and new rows added to the following tables: – 41-23 – 41-24 – 41-25 • Digital to Analog Converter (DAC) Characteristics had numerous updates to merge cells, add new parameter values, and notes to the following tables: – 41-28 – 41-30 • Updated table 41-32 in Bandgap and Internal 1.0V Reference Characteristics with new symbol values
Appendix B	Added a new Appendix for ISELED Specifications.

Downloaded from Arrow.com.

.....continued	
Section	**Description**
Packaging	The following packages were updated with new drawings: • 64TQFP • 64 pin QFN • 64 Lead QFN with Sawn Wettable Flanks • 64-ball UFBGA • 48 pin TQFP • 48 pin QFN • 48 lead QFN with Sawn Wettable Flanks • 45-ball WLCSP • 32 pin TQFP • 32 pin QFN • 32 lead QFN with Sawn Wettable Flanks • 35-ball WLCSP (Device Variant B) • 35-ball WLCSP (Device Variant C) • 35-ball WLCSP (Device Variant D)

48.3 Revision F - March 2020

This revision includesthe updates as listed in the following table, and several typographical corrections throughout the document.

Section	Description
Appendix A	Added a new appendix SIL 2 Enabled Functional Safety Devices
Packaging Information	Added '35-ball WLCSP (Device variant D)'
DAC	• Updated the INTENSET register, changed disable to enable for interrupts. • Updated the SYNCRDY bit of the INTENSET Register. Added information about internal 1.0V buffered reference voltage.
ADC	Added information about internal 1.0V buffered reference voltage. Updated CALIB register description.
SAM DA1 Electrical Characteristics	Updated I^2C Pins Characteristics in I^2C Configuration in I^2C Pins. Updated label for internal 1.1V Bandgap Reference Added information about internal 1.0V buffered reference voltage for ADC and DAC.
SERCOM I^2C	Updated the SYSOP bit of the SYNCBUSY Register with the removal of erroneous text
SERCOM SPI	Updated DOPO description.
EIC	Note added for CONFIGn registers.
DMAC	Updatetd Sleep mode operation description.
SYSCTRL	Removed reference to BOD12 registers. Added ENABLE bit in the VREG register.
DSU	Related linked added in the DID register description.

Downloaded from Arrow.com.

48.4 Revision E - January 2020

This revision encompasses changes made to combine the SAM D21 Data Sheet with the SAM DA1 Data Sheet to improve readability and information access.

Section	Description
Block Diagram	Added arrow between PORT and AHB-APB BRIDGE B.
Pinout	Updated section titles
Product Mapping	Updated the diagram to show the Internal Flash.
PORT I/O Pin Controller	Corrected the WRCONFIG register to show the DRVSTR bit.
SERCOM	Under Clock Generation - Baud-Rate Generator, the table was updated with a new information and equations.
SERCOM USART	• Information regarding FIFO was removed as it is not supported on this device • The FIFOCLR bit was removed from the CTRLB register • The FIFOSPACE and FIFOPTR registers were removed
SERCOM SPI	• Information on FIFO was removed as it is not supported on this device • The FIFOCLR bit was removed from the CTRLB register • The FIFOSPACE and FIFOPTR registers were removed
SERCOM I^2C	• Information on FIFO was removed as it is not supported on this device • The FIFOCLR bit was removed from the CTRLB Slave Register • Bit fields RXFF and TXFE were removed from the INTENCLR, INTENSET, and INTFLAG Slave Registers • The LENERR bit was removed from the STATUS Slave Register • Registers FIFOSPACE and FIFOPTR were removed from the Slave Registers • The FIFOCLR bit was removed from the CTRLB Master Register • Bit fields, RXFF and TXFE, were removed from the INTENCLR, INTENSET, and INTFLAG Master Registers • Registers FIFOSPACE and FIFOPTR were removed from the Master Registers
Timer Counter (TC)	• In Counter Mode, Count32 was updated with new TC numbering • The register summaries for 8-bit Mode, 16-bit Mode, and 32-bit Mode were updated to correctly display

Downloaded from Arrow.com.

.....continued

Section	Description
TCC	• FCTRLA and FCTRLB had their naming corrected • In the WEXCTRL register the DTIEN bit had the numbering updated • In the DRVCTRL register the numbering was updated for the INVENx, NRVx, and NREx bits • In the EVCTRL register the numbering was updated for the MCEOx, MCEIx, TCEIx, and TCINVx Registers • In the INTENCLR, INTENSET, and INTFLAG registers the numbering was updated for the MCx bit • In the STATUS register the numbering was updated for the CMPx and FAULTx bits • The PATT register was updated to properly display the PGVx and PGEx bits • The PATTB register was updated to properly display the PGVBx and PGEBx bits
USB	Updated cross references.
ADC	Updated the MUXPOS Bit table in the INPUTCTRL register.
AC	• Updated the STARTx bit numbering in the CTRLB register • Updated the bit numbering for the COMPEIx, COMPEOx, and WINEOx bits in the EVCTRL register • Updated the bit numbering for the WINx, and COMPx bits in the INTENCLR, INTENSET, and INTFLAG registers • Updated the bit numbering for the WSTATEx and STATEx bits in the STATUSA register • Updated the bit numbering for the READYx bit in the STATUSB register • Updated the bit numbering for the WSTATEx and STATEx bits in the STATUSC register • Updated the bit numbering for the WINTSELx and WENx bits in the WINCTRL register
SAM DA1 Electrical Characteristics	This section was migrated into this data sheet from the original SAM DA1 data sheet.
Schematic Checklist	Updated External Reset Circuit with changes to the diagram External Reset Circuit Schematic.
Packaging Information	Updated Package Markings with a new marking diagram.

48.5 Rev D - 9/2018

Configuration Summary	Updated to Add new packages for device variant D.
Product Mapping	Updated diagram.

Downloaded from Arrow.com.

RTC	Updated READREQ register tables.
DMAC	Updated Channel Control B Register tables.
24. EVSYS – Event System	• Updated the Channel Register tables • Updated the User Register tables.
DAC	Updated the 35.3 Block Diagram to display ADC Input.
Electrical Characteristics at 85°C	• Updated Decoupling Requirements table. .
38. Electrical Characteristics at 105°C	
39. Electrical Characteristics at 125°C	
AEC-Q100 Electrical Characteristics at 125°C	
Packaging Information	Updated the WLSCP 45-Ball Package diagram.

48.6 Rev. C – 06/2018

Features	• Added Qualification AEC-Q100 Grade 1 (-40C to 125C).
Ordering Information	• Added: under Package Grade Z = -40 – 125C Matte Sn Plating AEC-Q100
Electrical Characteristics	• Updated with new chapter for AEC-Q100 Specifications.
Packaging Information	• Added QFN package drawings with wettable flanks.

48.7 Rev. B – 04/2018

General	• This revision was updated to include the SAM D21EL and SAM D21GL Variant information, which was released separately in DS40001883A. The SAM D21EL/SAM D21GL Data Sheet (DS40001883A) is superseded by this revision (DS40001882B). • IOBUS start addressed is added which was missing in previous revision (DS40001882A).
Electrical Characteristics	• Clarified ESR information for VDDCORE capacitor • Typo addressed for VDDIN capacitor value
DMA	• RUNSTDBY not supported, typo addressed
AC	• Continuous Mode SleepWalking figure is updated
ADC	• Bandgap reference as input was omitted in previous version of the data sheet. It is added in this version.
Packaging Information	• WLCSP package drawings updated • Thermal characteristic for 45-ball WLCSP & 64-pin UFBGA is added

Downloaded from Arrow.com.

48.8 Rev. A – 01/2017

General	• Template: Updated from Atmel to Microchip template. • Document number: Changed from the Atmel 42181 to Microchip xxxxx. • Document revision letter reset to A. • ISBN number added.
Electrical Characteristics	• Die Revision F final characterization added. • 37.7 Power Consumption: Added Standby typical numbers for Device Variant C / Die Revision F. • 37.13.7 Fractional Digital Phase Locked Loop (FDPLL96M) Characteristics: Added characterization data for Device Variant C / Die Revision F.
Errata	• New errata added: – B – Device Variant A: Errata reverence 15625, 15683, 15753 added. – Device Variant B: Errata reverence 15625, 15683, 15753 added. – Device Variant C: Errata reverence 15625, 15683, 15753 added.
39. Electrical Characteristics at 125°C	• Die Revision F final characterization is preliminary. • 39.5 Power Consumption: Added Standby typical numbers for Device Variant C / Die Revision F. • 39.8.7 Fractional Digital Phase Locked Loop (FDPLL96M) Characteristics: Added characterization data for Device Variant C / Die Revision F.

48.9 Rev. O – 12/2016

General	• Introduced Device Variant C.
37. Electrical Characteristics at 85℃	• Die Revision F characterization is preliminary. • 37.7 Power Consumption: Added Standby typical numbers for Device Variant C / Die Revision F. • 37.13.7 Fractional Digital Phase Locked Loop (FDPLL96M) Characteristics: Added characterization data for Device Variant C / Die Revision F.
39. Electrical Characteristics at 125°C	• Die Revision F characterization is preliminary. • 39.5 Power Consumption: Added Standby typical numbers for Device Variant C / Die Revision F. • 39.8.7 Fractional Digital Phase Locked Loop (FDPLL96M) Characteristics: Added characterization data for Device Variant C / Die Revision F.

48.10 Rev. N – 10/2016

7. I/O Multiplexing and Considerations	• 7.1 Multiplexed Signals: Updated table note 6 with information on PA24 and PA25.
10. Memories	• 10.3.1 NVM User Row Mapping: Added BOOTPROT default value for WLCSP.
30. TC – Timer/Counter	• 30.5.3 Clocks: Corrected TC instance numbers. • 30.6.2.4 Counter Mode: Corrected TC instance numbers.

Downloaded from Arrow.com.

37. Electrical Characteristics at 85°C	• 37.9.1 Normal I/O Pins: Added condition to Pull-up - Pull-down resistance.

48.11 Rev. M – 09/2016

2. Configuration Summary	• Added information on number of pins for the SAM D21G WLCSP pakcage option. SAM D21G is offered in 48 pin packages, while the WLCSP has 45 pins.
3. SAM D21 Ordering Information(1)	• Added information to the pin count explanation. For the The G letter indicates 48 pin packages, while the WLCSP option is 45 pins. • ATSAMD21E18A-MFUT corrected to ATSAMD21E18A-MFT. • Device Identification: – Removed C variants. – Added device identification values for the devices in WLCSP packages. These have separate device id's compared to the other package options.
18. WDT – Watchdog Timer	• 18.5.7 Debug Operation: Removed the sentence "This peripheral can be forced to continue operation during debugging." The WDT can not be forced to continue operation in debug mode.

48.12 Rev. L – 09/2016

2. Configuration Summary	• Added information on number of pins for the WLCSP pakcage. SAM D21E is offered in 32 pin packages, while the WLCSP has 35 pins.
13. DSU - Device Service Unit	• 13.11.5 Testing of On-Board Memories MBIST: Updated description.
14. Clock System	• 14.5 Disabling a Peripheral: New section added.
17. SYSCTRL – System Controller	• 17.8.5 XOSC.AMPGC bit description updated.
21. EIC – External Interrupt Controller	• 21.6.6 Interrupts: Added note explaining how it works when the same external interrupt (EXTINT) is common on sevral pins.
24. EVSYS – Event System	• 24.8.1 CTRL.SWRST: Added recommendation when doing a software reset.
28. SERCOM I2C – Inter-Integrated Circuit	• Corrected cross references in the Master 28.10.1 CTRLA.SCLSM and Slave 28.8.1 CTRLASCLSM bits.
31. TCC – Timer/Counter for Control Applications	• Value 0 in CAPTMIN mode is captured only in down-counting mode.
33. ADC – Analog-to-Digital Converter	• 33.6.5 Differential and Single-Ended Conversions: Corrected register reference from INPUTCTRL.DIFFMODE to CTRLB.DIFFMODE. • 33.8.14 RESULT: Corrected description. Reference to "single-ended mode" corrected to "single conversion mode".
37. Electrical Characteristics at 85°C	• 37.3 Absolute Maximum Ratings: Add ESD warnings. • 37.16.5 I2S Timing: f_{M_SCKO} and f_{M_SCKI} values for VDD=1.8V moved from the minimum to maximum column. • XOSC32K 37.13.2.1.1 Crystal Oscillator Characteristics: Removed conditions from the parasitic capacitor loads C_{XIN32} and C_{XOUT32}. The difference between package types is so small that it can be ingored.

Downloaded from Arrow.com.

45. Schematic Checklist	• 45.5.3 External Real Time Oscillator: Added note on how to minimize jitter.
39. Electrical Characteristics at 125°C	• 39.4 Maximum Clock Frequencies: Corrected heading of Table 39-6 say "Device Variant B".

48.13 Rev. K – 09/2016

3. SAM D21 Ordering Information(1)	• SAM D21E: Added Device Variant C ordering codes. • Device Identification: Added Device Variant C.
7. I/O Multiplexing and Considerations	• The section is reorgnaized: – 7.2.3 SERCOM I2C Pins: Replaces the "Type" column in 7.1 Multiplexed Signals. – 7.2.4 GPIO Clusters: Moved from 37.3 Absolute Maximum Ratings. – 7.2.5 TCC Configurations: Moved from the TCC 31.1 Overview.
16. PM – Power Manager	• 16.8.10 APBCMASK updated.
13. DSU - Device Service Unit	• 13.11.6 System Services Availability when Accessed Externally and Device is Protected: MBIST not available when device is operated from external address range and device is protected.
19. RTC – Real-Time Counter	• 19.6.3.3 Clock/Calendar (Mode 2): Example added on how the clock counter works in calendar mode.
30. TC – Timer/Counter	• 30.8.1 CTRLA.WAVEGEN[1:0]: Name column updated.
31. TCC – Timer/Counter for Control Applications	• 31.6.3.6 Non-Recoverable Faults: Removed references to Update Fault State (UFS). • Removed the UFS bit from the INTENCLR, INTENSET, INTFLAG and STATUS registers. • Removed RAMP2C from the 31.8.16 WAVE.WAVE[2:0]=0x3
37. Electrical Characteristics at 85°C	• 37.3 Absolute Maximum Ratings: Updated V_{PIN} minimum and maximum values. (Related to the new Injection Current definition section) • 37.5 Supply Characteristics: Corrected supply rise rates units from V/s to V/µs. • 37.7 Power Consumption: Added power consumption numbers for Device Variant C. • 37.13.7 Fractional Digital Phase Locked Loop (FDPLL96M) Characteristics: Added characterization data for Device Variant C. • Added 37.10 Injection Current section.
44. Packaging Information	• Added 44.1.14 35 ball WLCSP (Device Variant C) package outline drawing.
Errata	• Added errata for Device Variant C.
39. Electrical Characteristics at 125°C	• 39.8.7 Fractional Digital Phase Locked Loop (FDPLL96M) Characteristics: Added characterization data for Device Variant C. • 39.2 Absolute Maximum Ratings: Updated V_{PIN} minimum and maximum values. (Related to the new Injection Current definition section)

Downloaded from Arrow.com.

48.14 Rev. J – 07/2016

3. SAM D21 Ordering Information(1)	• SAM D21E: Added ATSAMD21E15B-UUT.
30. TC – Timer/Counter	• 30.8.7 EVCTRL:EVACT[2:0] bit description updated: Time stamp capture and pulse width capture removed .
31. TCC – Timer/Counter for Control Applications	• 31.6.3 Additional Features: Removed "Time-Stamp Capture" section. • 31.8.9 EVCTRL:EVACT0[2:0] bit description updated: "Capture Overflow times (Max value)" option removed (Related to Time-Stamp Capture).
Errata	• Cleaned up errata section: Split between device variant A and B.

48.15 Rev. I – 03/2016

2. Configuration Summary	
	Updated value for Waveform output channels per TCC to 8/4/2.
7. I/O Multiplexing and Considerations	
	Added Note.6 for Table 7-1
10. Memories	
	Table 10-1: Updated *start address* in *Internal RWW section* to from 0x00010000 to 0x00400000.
22. Nonvolatile Memory Controller (NVMCTRL)	
	Updated value from "NVM Base Address + 0x00010000" to "NVM Base Address + 0x00400000"in Figure 22-3
26. SERCOM USART	
	Updated equation and added error calculation explained w/example in section 26.6.2.6.4 Asynchronous Operational Range
31. TCC – Timer/Counter for Control Applications:	
	Register Summary: Remove INTENCLR.SYNCRDY. Add MC0 (located in bit 0) for INTENSET and INTFLAG, and left shift MC1, MC2 and MC3 for one bit. Therefore, MC0/1/2/3 are located in bit 0/1/2/3.
37. Electrical Characteristics at 85°C	

Downloaded from Arrow.com.

	Updated unit from 's' to 'us' in the following tables: • Table 39-11 • Table 39-12 • Table 39-24 • Table 39-25 • Table 39-37 • Table 39-38 • Table 39-39 • Table 39-40 • Table 39-45 • Table 39-46 • Table 39-47 • Table 39-48 Update value and condition for Table 39-39 and Table 39-40
44. Packaging Information	
	Updated section 44.1.11 32-Pin VQFN .

48.16 Rev. H – 01/2016

20. DMAC – Direct Memory Access Controller	
	Updated bit description of the PRICTRL0.LVLPRIn [n=3..0].
22. Nonvolatile Memory Controller (NVMCTRL)	
	Updated description in 22.6.4.3 NVM Write: Removed reference to default NWM CTRLB.MANW default value. Updated reset value for CTRLB.MANW from 0 to 1. Note that this change is only applicable for Device Variant B. Device Variant A will continue to have MANW bit reset value 0. Updated reset value of the CTRLB register from 0x00000000 to 0x00000080. Note that this change is change is only applicable for Device Variant B. Device Variant A will continue to have CTRLB register reset value 0x00000000.
13. DSU - Device Service Unit	
	Bit CTRL.CRC is write-only.
32. USB – Universal Serial Bus:	
	Register HSOFC.FLENCE description updated. USB Device Registers - Common: Bit description of CTRLB .SPDCONF[1:0] updated.
44. Packaging Information	
	Updated values in 37.2.1 Thermal Resistance Data. Corrected junction temperature equations: T_C updated to T_J. Updated package drawing for 44.1.13 35 ball WLCSP (Device Variant B): GPC corrected from GJP to GJR. No other changes.
45. Schematic Checklist	

Downloaded from Arrow.com.

	Added 45.1.1 Operation in Noisy Environment. Updated section 45.7 Programming and Debug Ports. Updated recommended pin connection in 45.7.2 10-pin JTAGICE3 Compatible Serial Wire Debug Interface: Pull-up resistor value on SWCLK pin changed from 10kΩ to 1kΩ. VDDCORE decoupling capacitor value updated from 100nF to 1µF in 45.2.1 Power Supply Connections

48.17 Rev. G – 09/2015

17. SYSCTRL – System Controller:	
	Updated description in 17.6.7.1.5 Drift Compensation.
37. Electrical Characteristics at 85°C:	
	Removed note from Table 37-53 and Table 37-54.
44. Packaging Information:	
	Package drawing updated 44.1.9 45-ball WLCSP.
39. Electrical Characteristics at 125°C:	
	Removed note from:Table 39-39 and Table 39-40. Updated power consumption units in Table 39-7.

48.18 Rev. F – 07/2015

Ordering Information	
	Added ATSAMD21E15B-UUT and ATSAMD21E16B-UUT ordering codes (WLCSP35 package option).
4. Block Diagram	
	Updated system block diagram.
5. Pinout	
	Added pinout figure for 5.6.1 WLCSP35.
9. Product Mapping	
	Updated Internal RWW section to start address from 0x00010000 to 0x00400000.
ADC - Analog-to-Digital Converter	
	References to AREFA and AREFB replaced with VREFA and VREFB respectively.
37. Electrical Characteristics at 85°C	
	Added GPIO cluster note to '37.3 Absolute Maximum Ratings. Added 37.16.5 I2S Timing. Updated BOD33 characteristics. Added characterization data for Device Variant B.
Packaging Information	

Downloaded from Arrow.com.

	Updated Θ_{JC} value from 3.1 to 15.0 °C/W for 32-pin QFN package in 37.2.1 Thermal Resistance Data. Added package drawing for 44.1.13 35 ball WLCSP (Device Variant B).
Schematic Checklist	
	45.2.1 Power Supply Connections: VDDCORE decoupling capacitor value updated from 100nF to 1µF. References to AREFA and AREFB replaced with VREFA and VREFB respectively.
Electrical Characteristics at 125C	
	Added I2S Timing. Updated BOD33 characteristics. Added characterization data for Device Variant B.

48.19 Rev. E – 02/2015

1. Description:	
	CoreMark score updated from 2.14 to 2.46 CoreMark/MHz.
3. SAM D21 Ordering Information(1):	
	Added Ordering codes for Device Variant B. Added 125°C ordering codes for QFN and TQFP package options: SAMD21E, SAM D21E, SAM D21G, and SAM D21J, and . Added WLCSP package option for SAM D21G . Added UFBGA package option for SAM D21J .
5. Pinout:	
	Added pinout figures for 5.1.2 UFBGA64 and 5.3.1 WLCSP45.
9. Product Mapping:	
	Updated Product Mapping figure with Internal RWW section block for Device Variant B.
10. Memories:	
	10.2 Physical Memory Map: Added start address for Internal Read While Write (RWW) section for Device Variant B.
11. Processor And Architecture:	
	11.1.1 Cortex M0+ Configuration: Removed green connection dots between DMAC Data and AHB-APB Bridge A and Bridge B.
22. Nonvolatile Memory Controller (NVMCTRL):	

Downloaded from Arrow.com.

	Introducing Read While Write (RWW) feature for Device Variant B. Updated and New sections: 22.1 Overview 22.2 Features 22.3 Block Diagram 22.6.4.1 NVM Read 22.6.4.2 RWWEE Read 22.6.4.3 NVM Write 22.6.4.5 Erase Row 22.6.2 Memory Organization: Figure 22-2 updated. Register Summary and 22.8 Register Description: 22.8.3 PARAM: Added RWWEEP[12:0] bits for Device Variant B.
23. PORT - I/O Pin Controller:	
	23.6.3 I/O Pin Configuration: Removed reference to “open-drain”. Access for DRVSTR bit in Pin Configuration n register (PINCFGn.DRVCTR) updated from W to R/W.
17. SYSCTRL – System Controller:	
	Removed references to XOSC32K and OSC32 1kHz clock output option: - XOSC32K: 17.6.3 32kHz External Crystal Oscillator (XOSC32K) Operation - OSC32K: 17.6.4 32 kHz Internal Oscillator (OSC32K) Operation 1kHz Output Enable (EN1K) bit set as reserved bit: - Bit 4 in 17.8.6 XOSC32K - Bit 3 in 17.8.7 OSC32K
37. Electrical Characteristics at 85°C:	
	37.11.3 Brown-out Detectors Characteristics: Added Figure 37-3 and Figure 37-4 and updated conditions in Table 37-21 and Table 37-23.
44. Packaging Information:	
	Added 44.1.5 64-ball UFBGA and 44.1.9 45-ball WLCSP package drawings.
45. Schematic Checklist	
	Updated description in 45.6 Unused or Unconnected Pins.
Errata:	
	Device Variant A: - Updated errata for revision A: Added Errata Reference 12291, 13507, 13574. - Updated errata for revision B: Added Errata Reference 12291, 13507, 13574. - Updated errata for revision C: Added Errata Reference 12291, 13507, 13574, 13951. - Added errata for revision D. Device Variant B: - Added errata for revision E (Only available for SAMD21x15/16).
39. Electrical Characteristics at 125°C:	
	Electrical characteristics for 125°C added.

Downloaded from Arrow.com.

48.20 Rev. D – 09/2014

Block Diagram	
	NVM Controller bus connection changed from Master to Slave.
Clock System	
	Register Synchronization updated by splitting the section into Common synchronizer Register Synchronization and Distributed Synchronizer Register Synchronization.
Electrical Characterstics	
ADC Characteristics	: Added note defining gain accuracy parameter in: - ADC Differential Mode, Differential Mode (Device Variant) ADC Single-Ended Mode, Single-Ended Mode (Device Variant A)
Errata	
	Updated errata for revision A, B and C: Added Errata Reference 13140, 12860.

48.21 Rev. C – 07/2014

37. Electrical Characteristics at 85°C	
	Updated condition for Rise time for both SDA and SCL (t_R) in High Speed Mode: C_b changed from 1000pF to 100pF in Table 37-16.
Errata	
	Errata for revision C and E added.

48.22 Rev. B – 07/2014

General:
Introduced the new product family name: Atmel | SMART Removed references to Clock Failure Detection. Sub sections within chapters might been moved to other location within the chapter. Typo corrections.
2. Configuration Summary
Added 32KB Flash and 4KB SRAM options to SAM D21J and SAM D21G.
3. SAM D21 Ordering Information(1)
Added Tray to Carrier Type option for SAM D21E, SAMD 21G and SAMD21J ordering codes.
7. I/O Multiplexing and Considerations:
Updated REF function on PA03 and PA04 in Table 7-1: PA03: DAC/VREFP changed to DAC/VREFA. PA04: ADC VREFP changed to ADC/VREFB. Updated COM function on PA30 and PA31: PA30: CORTEX_M0P/SWCLK changed to SWCKL. PA31: Added SWDIO.

Downloaded from Arrow.com.

10. Memories
Added a second note to Table 10-3. Added Figure 10-1 Calibration and Auxiliary Space. Added default values for fuses in Table 10-7 NVM User Row Mapping.
11. Processor And Architecture
MTB renamed from “Memory Trace Buffer” to “Micro Trace Buffer”.
13. DSU - Device Service Unit
Updated description of 13.11.3.1 Starting CRC32 Calculation. Updated title of Table 13-6. Added Device Selection table to Device Selection bit description the Device Identification register (DID.DEVSEL).
15. GCLK - Generic Clock Controller
Signal names updated in Device Clocking Diagram, 15.3 Block Diagram.
16. PM – Power Manager
Added figure Figure 16-2. Register Summary: Removed CFD bit from INTENCLR, INTENSET and INTFLAG. Added PTC bit to APBCMASK register. Register Description: AHB Mask register (AHBMASK): Full bit names updated. APBC Mask register (APBCMASK.PTC): Added PTC to bit 19. CFD bit removed from INTENCLR, INTENSET and INTFLAG.
17. SYSCTRL – System Controller
Updated description of 17.6.6 8MHz Internal Oscillator (OSC8M) Operation. FDPLL96M section reorganized and more integrated in the SYSCTRL chapter: Features, Signal Description and Product Dependencies sub sections removed and integrated with the corresponding sections in SYSCTRL. Register Summary: Added VREG register on address 0x3C - 0x3D. Register Description: Updated reset values in OSC8M. Updated CALIB[11:0] bit description in OSC8M. Updated LBYPASS bit description in DPLLCTRLB.
18. WDT – Watchdog Timer
Updated description in 18.6.1 Principle of Operation: Introducing the bits used in Table 18-1. Updated description in 18.6.2.1 Initialization. Updated description in 18.6.2.4 Normal Mode. Updated description in 18.6.2.5 Window Mode. Updated description in 18.6.4 Interrupts. WEN bit description in the Control register (CTRL.WEN) updated with information on enable-protection.
19. RTC – Real-Time Counter

Downloaded from Arrow.com.

19.6.9.1 Periodic Events: Bit names updated fro, PERx to PEREOx in example, Figure 19-4.
CLOCK.HOUR[4:0]: Updated Table 19-4

Mode 0 and Mode 2: CMPx bit renamed to CMP0 since only one CMP0 is available.

Bit description of CLOCK.HOUR[4:0]: Updated Table 19-4

ALARMn register renamed to ALARM0.

20. DMAC – Direct Memory Access Controller

Updated block diagram, 20.3 Block Diagram.
General updated description.

21. EIC – External Interrupt Controller

Register Summary and Register Description:
EVCTRL register: Added bits EXTINTO17 and EXTINTO16 in bit position 17 and 16 respectively.

INTENCLR, INTENSET, INTENFLAG registers: Added bits EXTINT17 and EXTINT16 in bit position 17 and 16 respectively.

WAKEUP register: Added bits WAKEUPEN17 and WAKEUPEN16 in bit position 17 and 16 respectively.

CONFIG2 register added, CONFIG0 and CONFIG1 registers updated: Added bits FILTEN0...31 and SENSE0...31.

22. Nonvolatile Memory Controller (NVMCTRL)

CTRLB register: Removed table from NVM Read Wait States description (RWS[3:0])

23. PORT - I/O Pin Controller

Instances of the term “pad” replaced with “pin”.
Instances of the term “bundle” replaced with “group” and “interface”.

23.6.2 Basic Operation description updated.

Peripheral Multiplexing n (PMUX0) register: Offset formula updated.

24. EVSYS – Event System

Updated information in 24.2 Features.
24.5.2 Power Management updated: Description of on how event generators can generate an event when the system clock is stopped moved to 24.6.4 Sleep Mode Operation.

24.5.3 Clocks updated: Renamed EVSYS channel dedicated generic clock from GCLK_EVSYS_x to GCLK_EVSYS_CHANNELx.

Updated description in 24.6.1 Principle of Operation.

Updated description in sub sections of 24.6.2 Basic Operation.

Updated description in 24.6.3.1 The Overrun Channel n Interrupt.

Channel x Overrun bit description in 24.8.7 INTFLAG updated.

26. SERCOM USART

Updated description in 26.6.3.4 Break Character Detection and Auto-Baud.
Updated description in 26.6.3.7 Start-of-Frame Detection.

29. I2S - Inter-IC Sound Controller

Downloaded from Arrow.com.

Introducing Frame Synch Clock.
29.4 Signal Description: Added separate tables for Master-, Slave- and Controller mode.

Updated description in 29.5.7 Debug Operation and 29.5.8 Register Access Protection.

Updated description in 29.6.1 Principle of Operation.

Updated description in sub sections of 29.6.2 Basic Operation.

Updated formula in 29.6.2.1.3 MCKn Clock Frequency.

Updated formulas in 29.6.2.1.5 Relation Between MCKn, SCKn, and Sampling Frequency fs.

Updated description in 29.6.6 PDM Reception.

Section on MONO removed and information included in 29.6.2 Basic Operation.

Updated property of Control A (CTRLA) register: Added Write-Synchronized

31. TCC – Timer/Counter for Control Applications

Updated description in 31.6.1 Principle of Operation.
Updated description in sub sections of 31.6.2 Basic Operation.

Updated description in sub sections of 31.6.3 Additional Features.

Updated description in 31.6.6 Synchronization.

Lock Update (LUPD) bit description updated in Control B Clear (CTRLBCLR) register.

Compare Channel Buffer x Busy (CCBx) bit description updated in Synchronization Busy (SYNCBUSY) register.

Event Control (EVCTRL) register property updated: Removed Enable-Protected.

Interrupt Enable Clear (INTENCLR), Interrupt Enable Set (INTENSET) and Interrupt Flag Status and Clear (INTFLAG) registers: Updated bit description of FAULT0, FAULT1, FAULTA and FAULTB.

STATUS register bit descriptions updated.

Wave Control (WAVE) register property updated: Removed Read-Synchronized.

Pattern Buffer (PATTB) register: Updated property and bit description.

Waveform Control Buffer (WAVEB) register: Updated property and bit descriptions.

32. USB – Universal Serial Bus

Removed figures: Setup Transaction Overview, OUT Single Bank Transaction Overview, IN Single Bank Transaction Overview and USB Host Communication Flow.
Updated description and graphics in sub sections of 32.6.2 USB Device Operations.

Updated description in sub sections of 32.6.3 Host Operations.

Pad Calibration (PADCAL) register: Access updated.

Upgraded bit descriptions.

Pipe Descriptor Structure: Updated register reset values.

33. ADC – Analog-to-Digital Converter

Register Description:
REFCTRL bit selection names updated from AREFA / AREFB to VREFA / VREFB in Table 33-5

35. DAC – Digital-to-Analog Converter

Updated block diagram and signal description: VREFP replaced with VREFB.

37. Electrical Characteristics at 85°C

Downloaded from Arrow.com.

Updated V_{DD} max from 3.63V to 3.63V in 37.3 Absolute Maximum Ratings. Updated VDDIN pin from 57 to 56 in 7.2.4 GPIO Clusters. 37.7 Power Consumption: Updated Max values for STANDBY from 190.6µA and 197.3µA to 100µA in Table 37-8. Added 37.8 Peripheral Power Consumption. 37.9 I/O Pin Characteristics: tRISE and tFALL updated with different load conditions depending on the DVRSTR value in . 37.9 I/O Pin Characteristics: Correct typo IOL and IOH Max values inverted between PORT.PINCFG.DRVSTR=0 and 1, tRISE and tFALL updated with different load conditions depending on the DVRSTR value in Table 37-15. 37.11 Analog Characteristics: Removed note from Table 37-19. 37.11.4 Analog-to-Digital (ADC) characteristics: Added Max DC supply current (I_{DD}), R_{SAMPLE} maximum value changed from 2.8kW to 3.5kW, Conversion time Typ value change to Min Value in Table 37-24. 37.11.5 Digital to Analog Converter (DAC) Characteristics: Added Max DC supply current (I_{DD}) in Table 37-32. 37.11.6 Analog Comparator Characteristics: Added Min and Max values for VSCALE INL, DNL, Offset Error and Gain Error in Table 37-36. 37.11.7 Bandgap and Internal 1.0V Reference Characteristics: Added Min and Max values, removed accuracy row in Table 37-38. 37.16.3 SERCOM in I2C Mode Timing: Add Typical values for t_R in Table 37-68. Removed Asynchronous Watchdog Clock Characterization. 37.13.4 32.768kHz Internal oscillator (OSC32K) Characteristics: Added Max current consumption (I_{OSC32K}) in Table 37-55. Updated Crystal Oscillator Characteristics (XOSC32K) ESR maximum values, 37.13.2.1.1 Crystal Oscillator Characteristics. Updated Crystal Oscillator Characteristics (XOSC) ESR maximum value, 37.13.1.2 Crystal Oscillator Characteristics from 348kΩ to 141kΩ. 37.13.3 Digital Frequency Locked Loop (DFLL48M) Characteristics: Updated presentation, now separating between Open- and Closed Loop Modes. Added f_{REF} Min and Max values to Table 37-52. Updated typical Startup time ($t_{STARTUP}$) from 6.1µs to 8µs in Table 37-53. Updated typical Fine lock time (t_{LFINE}) from 700µs to 600µs in Table 37-53. 37.13.7 Fractional Digital Phase Locked Loop (FDPLL96M) Characteristics: Added Current consumption ($I_{FDPLL96M}$), Period Jitter (Jp), Lock time (t_{LOCK}), Duty cycles parameters in Table 37-58. Added 37.15 USB Characteristics. 37.16 Timing Characteristics: Added SCK period (t_{SCK}) Typ value in Table 37-65.
Errata
Errata for revision B added.

48.23 Rev. A - 02/2014

Initial released version of this data sheet.

Downloaded from Arrow.com.

The Microchip Web Site

Microchip provides online support via our web site at www.microchip.com/. This web site is used as a means to make files and information easily available to customers. Accessible by using your favorite Internet browser, the web site contains the following information:

- **Product Support** – Data sheets and errata, application notes and sample programs, design resources, user's guides and hardware support documents, latest software releases and archived software
- **General Technical Support** – Frequently Asked Questions (FAQ), technical support requests, online discussion groups, Microchip consultant program member listing
- **Business of Microchip** – Product selector and ordering guides, latest Microchip press releases, listing of seminars and events, listings of Microchip sales offices, distributors and factory representatives

Customer Change Notification Service

Microchip's customer notification service helps keep customers current on Microchip products. Subscribers will receive e-mail notification whenever there are changes, updates, revisions or errata related to a specified product family or development tool of interest.

To register, access the Microchip web site at www.microchip.com/. Under "Support", click on "Customer Change Notification" and follow the registration instructions.

Customer Support

Users of Microchip products can receive assistance through several channels:

- Distributor or Representative
- Local Sales Office
- Field Application Engineer (FAE)
- Technical Support

Customers should contact their distributor, representative or Field Application Engineer (FAE) for support. Local sales offices are also available to help customers. A listing of sales offices and locations is included in the back of this document.

Technical support is available through the web site at: www.microchip.com/support

© 2021 Microchip Technology Inc. and its subsidiaries

Downloaded from Arrow.com.

Product Identification System

To order or obtain information, e.g., on pricing or delivery, refer to the factory or the listed sales office.

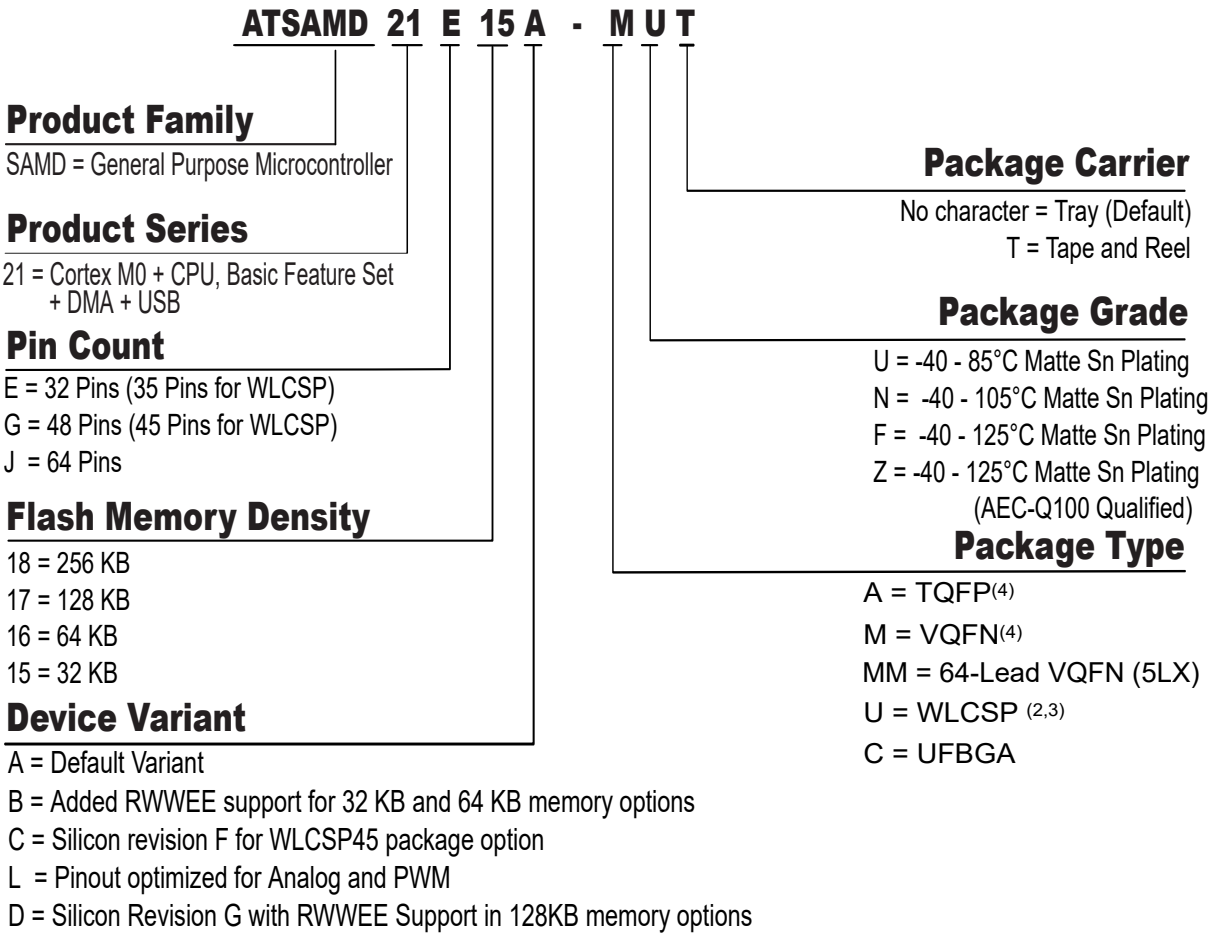

Microchip Devices Code Protection Feature

Note the following details of the code protection feature on Microchip devices:

- Microchip products meet the specification contained in their particular Microchip Data Sheet.
- Microchip believes that its family of products is one of the most secure families of its kind on the market today, when used in the intended manner and under normal conditions.
- There are dishonest and possibly illegal methods used to breach the code protection feature. All of these methods, to our knowledge, require using the Microchip products in a manner outside the operating specifications contained in Microchip's Data Sheets. Most likely, the person doing so is engaged in theft of intellectual property.
- Microchip is willing to work with the customer who is concerned about the integrity of their code.
- Neither Microchip nor any other semiconductor manufacturer can guarantee the security of their code. Code protection does not mean that we are guaranteeing the product as "unbreakable."

Code protection is constantly evolving. We at Microchip are committed to continuously improving the code protection features of our products. Attempts to break Microchip's code protection feature may be a violation of the Digital Millennium Copyright Act. If such acts allow unauthorized access to your software or other copyrighted work, you may have a right to sue for relief under that Act.

Downloaded from Arrow.com.

Legal Notice

Information contained in this publication regarding device applications and the like is provided only for your convenience and may be superseded by updates. It is your responsibility to ensure that your application meets with your specifications. MICROCHIP MAKES NO REPRESENTATIONS OR WARRANTIES OF ANY KIND WHETHER EXPRESS OR IMPLIED, WRITTEN OR ORAL, STATUTORY OR OTHERWISE, RELATED TO THE INFORMATION, INCLUDING BUT NOT LIMITED TO ITS CONDITION, QUALITY, PERFORMANCE, MERCHANTABILITY OR FITNESS FOR PURPOSE. Microchip disclaims all liability arising from this information and its use. Use of Microchip devices in life support and/or safety applications is entirely at the buyer's risk, and the buyer agrees to defend, indemnify and hold harmless Microchip from any and all damages, claims, suits, or expenses resulting from such use. No licenses are conveyed, implicitly or otherwise, under any Microchip intellectual property rights unless otherwise stated.

Trademarks

The Microchip name and logo, the Microchip logo, AnyRate, AVR, AVR logo, AVR Freaks, BeaconThings, BitCloud, CryptoMemory, CryptoRF, dsPIC, FlashFlex, flexPWR, Heldo, JukeBlox, KeeLoq, KeeLoq logo, Kleer, LANCheck, LINK MD, maXStylus, maXTouch, MediaLB, megaAVR, MOST, MOST logo, MPLAB, OptoLyzer, PIC, picoPower, PICSTART, PIC32 logo, Prochip Designer, QTouch, RightTouch, SAM-BA, SpyNIC, SST, SST Logo, SuperFlash, tinyAVR, UNI/O, and XMEGA are registered trademarks of Microchip Technology Incorporated in the U.S.A. and other countries.

ClockWorks, The Embedded Control Solutions Company, EtherSynch, Hyper Speed Control, HyperLight Load, IntelliMOS, mTouch, Precision Edge, and Quiet-Wire are registered trademarks of Microchip Technology Incorporated in the U.S.A.

Adjacent Key Suppression, AKS, Analog-for-the-Digital Age, Any Capacitor, AnyIn, AnyOut, BodyCom, chipKIT, chipKIT logo, CodeGuard, CryptoAuthentication, CryptoCompanion, CryptoController, dsPICDEM, dsPICDEM.net, Dynamic Average Matching, DAM, ECAN, EtherGREEN, In-Circuit Serial Programming, ICSP, Inter-Chip Connectivity, JitterBlocker, KleerNet, KleerNet logo, Mindi, MiWi, motorBench, MPASM, MPF, MPLAB Certified logo, MPLIB, MPLINK, MultiTRAK, NetDetach, Omniscient Code Generation, PICDEM, PICDEM.net, PICkit, PICtail, PureSilicon, QMatrix, RightTouch logo, REAL ICE, Ripple Blocker, SAM-ICE, Serial Quad I/O, SMART-I.S., SQI, SuperSwitcher, SuperSwitcher II, Total Endurance, TSHARC, USBCheck, VariSense, ViewSpan, WiperLock, Wireless DNA, and ZENA are trademarks of Microchip Technology Incorporated in the U.S.A. and other countries.

SQTP is a service mark of Microchip Technology Incorporated in the U.S.A.

Silicon Storage Technology is a registered trademark of Microchip Technology Inc. in other countries.

GestIC is a registered trademark of Microchip Technology Germany II GmbH & Co. KG, a subsidiary of Microchip Technology Inc., in other countries.

All other trademarks mentioned herein are property of their respective companies.

© 2018, Microchip Technology Incorporated, Printed in the U.S.A., All Rights Reserved.

ISBN: 978-1-5224-8898-9

Quality Management System Certified by DNV

ISO/TS 16949

Microchip received ISO/TS-16949:2009 certification for its worldwide headquarters, design and wafer fabrication facilities in Chandler and Tempe, Arizona; Gresham, Oregon and design centers in California and India. The Company's quality system processes and procedures are for its PIC® MCUs and dsPIC® DSCs, KEELOQ® code hopping devices, Serial EEPROMs, microperipherals, nonvolatile memory and analog products. In addition, Microchip's quality system for the design and manufacture of development systems is ISO 9001:2000 certified.

Downloaded from Arrow.com.

Worldwide Sales and Service

AMERICAS	ASIA/PACIFIC	ASIA/PACIFIC	EUROPE
Corporate Office 2355 West Chandler Blvd. Chandler, AZ 85224-6199 Tel: 480-792-7200 Fax: 480-792-7277 Technical Support: http://www.microchip.com/support Web Address: www.microchip.com **Atlanta** Duluth, GA Tel: 678-957-9614 Fax: 678-957-1455 **Austin, TX** Tel: 512-257-3370 **Boston** Westborough, MA Tel: 774-760-0087 Fax: 774-760-0088 **Chicago** Itasca, IL Tel: 630-285-0071 Fax: 630-285-0075 **Dallas** Addison, TX Tel: 972-818-7423 Fax: 972-818-2924 **Detroit** Novi, MI Tel: 248-848-4000 **Houston, TX** Tel: 281-894-5983 **Indianapolis** Noblesville, IN Tel: 317-773-8323 Fax: 317-773-5453 Tel: 317-536-2380 **Los Angeles** Mission Viejo, CA Tel: 949-462-9523 Fax: 949-462-9608 Tel: 951-273-7800 **Raleigh, NC** Tel: 919-844-7510 **New York, NY** Tel: 631-435-6000 **San Jose, CA** Tel: 408-735-9110 Tel: 408-436-4270 **Canada - Toronto** Tel: 905-695-1980 Fax: 905-695-2078	**Australia - Sydney** Tel: 61-2-9868-6733 **China - Beijing** Tel: 86-10-8569-7000 **China - Chengdu** Tel: 86-28-8665-5511 **China - Chongqing** Tel: 86-23-8980-9588 **China - Dongguan** Tel: 86-769-8702-9880 **China - Guangzhou** Tel: 86-20-8755-8029 **China - Hangzhou** Tel: 86-571-8792-8115 **China - Hong Kong SAR** Tel: 852-2943-5100 **China - Nanjing** Tel: 86-25-8473-2460 **China - Qingdao** Tel: 86-532-8502-7355 **China - Shanghai** Tel: 86-21-3326-8000 **China - Shenyang** Tel: 86-24-2334-2829 **China - Shenzhen** Tel: 86-755-8864-2200 **China - Suzhou** Tel: 86-186-6233-1526 **China - Wuhan** Tel: 86-27-5980-5300 **China - Xian** Tel: 86-29-8833-7252 **China - Xiamen** Tel: 86-592-2388138 **China - Zhuhai** Tel: 86-756-3210040	**India - Bangalore** Tel: 91-80-3090-4444 **India - New Delhi** Tel: 91-11-4160-8631 **India - Pune** Tel: 91-20-4121-0141 **Japan - Osaka** Tel: 81-6-6152-7160 **Japan - Tokyo** Tel: 81-3-6880- 3770 **Korea - Daegu** Tel: 82-53-744-4301 **Korea - Seoul** Tel: 82-2-554-7200 **Malaysia - Kuala Lumpur** Tel: 60-3-7651-7906 **Malaysia - Penang** Tel: 60-4-227-8870 **Philippines - Manila** Tel: 63-2-634-9065 **Singapore** Tel: 65-6334-8870 **Taiwan - Hsin Chu** Tel: 886-3-577-8366 **Taiwan - Kaohsiung** Tel: 886-7-213-7830 **Taiwan - Taipei** Tel: 886-2-2508-8600 **Thailand - Bangkok** Tel: 66-2-694-1351 **Vietnam - Ho Chi Minh** Tel: 84-28-5448-2100	**Austria - Wels** Tel: 43-7242-2244-39 Fax: 43-7242-2244-393 **Denmark - Copenhagen** Tel: 45-4450-2828 Fax: 45-4485-2829 **Finland - Espoo** Tel: 358-9-4520-820 **France - Paris** Tel: 33-1-69-53-63-20 Fax: 33-1-69-30-90-79 **Germany - Garching** Tel: 49-8931-9700 **Germany - Haan** Tel: 49-2129-3766400 **Germany - Heilbronn** Tel: 49-7131-67-3636 **Germany - Karlsruhe** Tel: 49-721-625370 **Germany - Munich** Tel: 49-89-627-144-0 Fax: 49-89-627-144-44 **Germany - Rosenheim** Tel: 49-8031-354-560 **Israel - Ra'anana** Tel: 972-9-744-7705 **Italy - Milan** Tel: 39-0331-742611 Fax: 39-0331-466781 **Italy - Padova** Tel: 39-049-7625286 **Netherlands - Drunen** Tel: 31-416-690399 Fax: 31-416-690340 **Norway - Trondheim** Tel: 47-7289-7561 **Poland - Warsaw** Tel: 48-22-3325737 **Romania - Bucharest** Tel: 40-21-407-87-50 **Spain - Madrid** Tel: 34-91-708-08-90 Fax: 34-91-708-08-91 **Sweden - Gothenberg** Tel: 46-31-704-60-40 **Sweden - Stockholm** Tel: 46-8-5090-4654 **UK - Wokingham** Tel: 44-118-921-5800 Fax: 44-118-921-5820

© 2021 Microchip Technology Inc.
and its subsidiaries

Downloaded from Arrow.com.