EV33A17A/EV44P93A

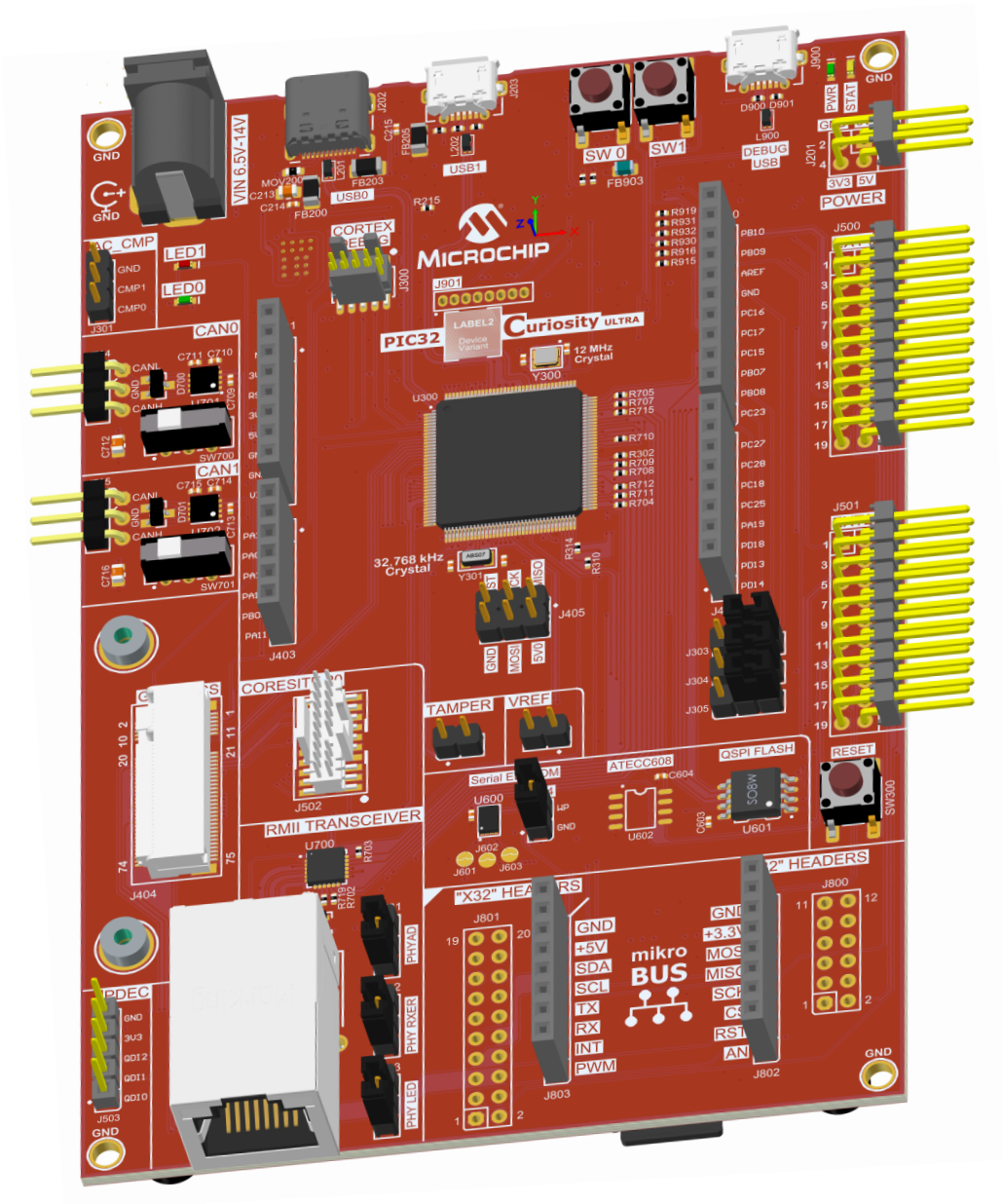

© 2024 Microchip Technology Inc. and its subsidiaries

Table of Contents

EV33A17A/EV44P93A....1

1. Introduction....3
   - 1.1. PIC32CK SG01/GC01 Curiosity Ultra Features....3
   - 1.2. Kit Contents....3

2. Development Board Features and Functionality....4
   - 2.1. PIC32CK SG01/GC01 Curiosity Ultra Development Board Feature Location....4
   - 2.2. System Block Diagram....6
   - 2.3. Power Block Diagram....6
   - 2.4. mikroBUS Socket....6
   - 2.5. Xplained Pro Standard Extension Header....7
   - 2.6. Dual CAN Interface....9
   - 2.7. Graphics Connectors or GFX Card Interface....9
   - 2.8. X32 Audio Connectivity....11
   - 2.9. Arduino Uno R3 Interface....12
   - 2.10. Ethernet....13
   - 2.11. Button and LED....13
   - 2.12. PICKit™ On-Board 4....13
   - 2.13. Recovery Method....14
   - 2.14. Demonstration Firmware Application....15

3. Hardware....17
   - 3.1. Schematics....17
   - 3.2. Bill of Materials....26

4. Revision History....31

Microchip Information....32
- The Microchip Website....32
- Product Change Notification Service....32
- Customer Support....32
- Microchip Devices Code Protection Feature....32
- Legal Notice....32
- Trademarks....33
- Quality Management System....34
- Worldwide Sales and Service....35

© 2024 Microchip Technology Inc. and its subsidiaries

1. Introduction

This document describes the Microchip PIC32CK SG01/GC01 Curiosity Ultra development board (EV33A17A/EV44P93A) features, functionality, and schematics. The PIC32CK SG01/GC01 Curiosity Ultra development board includes an integrated programmer or debugger, and requires no additional hardware to get started. Users can expand functionality through Arduino Uno R3, Mikro Bus, or Xplained Pro compatible expansion boards, and control a 3-phase inverter to drive a 3-phase BLDC, PMSM, and ACIM motor.

With expansion boards, the PIC32CK SG01/GC01 Curiosity Ultra development board provides the freedom to develop for a variety of applications, including Bluetooth® Audio, Internet of Things (IoT), robotics development, and proof of concept (POC) designs.

1.1 PIC32CK SG01/GC01 Curiosity Ultra Features

The following are key features of the PIC32CK SG01/GC01 Curiosity Ultra development board:

- PIC32CK2051SG01144 or PIC32CK2051GC01144,120 MHz, 2 MB Flash, 512 KB SRAM
- On-Board debugger (PKoB4)
  - Real time Programming and Debugging
  - Virtual COM port (VCOM)
  - Data Gateway Interface (DGI)
- Arduino Uno R3 compatible interface
- Xplained pro extension compatible interface
- Motor Control interface
- MikroBus™Socket
- On-Board Temperature Sensor
- 2x user buttons
- 2x user LEDs
- Graphics interface
- 10/100 MB Ethernet
- Hi-Speed USB Type-C™
- Full-Speed USB 2.0 (Micro)

1.2 Kit Contents

The kit contains one PIC32CK SG01/GC01 Curiosity Ultra development board (EV33A17A/EV44P93A).

Note: If any part of a kit is missing, contact a Microchip sales office for assistance. A list of Microchip offices for sales and service is provided on the last page of this document.

© 2024 Microchip Technology Inc. and its subsidiaries

2. Development Board Features and Functionality

The following sections provide the PIC32CK SG01/GC01 Curiosity Ultra development board features and functionality.

2.1 PIC32CK SG01/GC01 Curiosity Ultra Development Board Feature Location

Figure 2-1. PIC32CK SG01/GC01 Curiosity Ultra Development Board Layout (Top View)

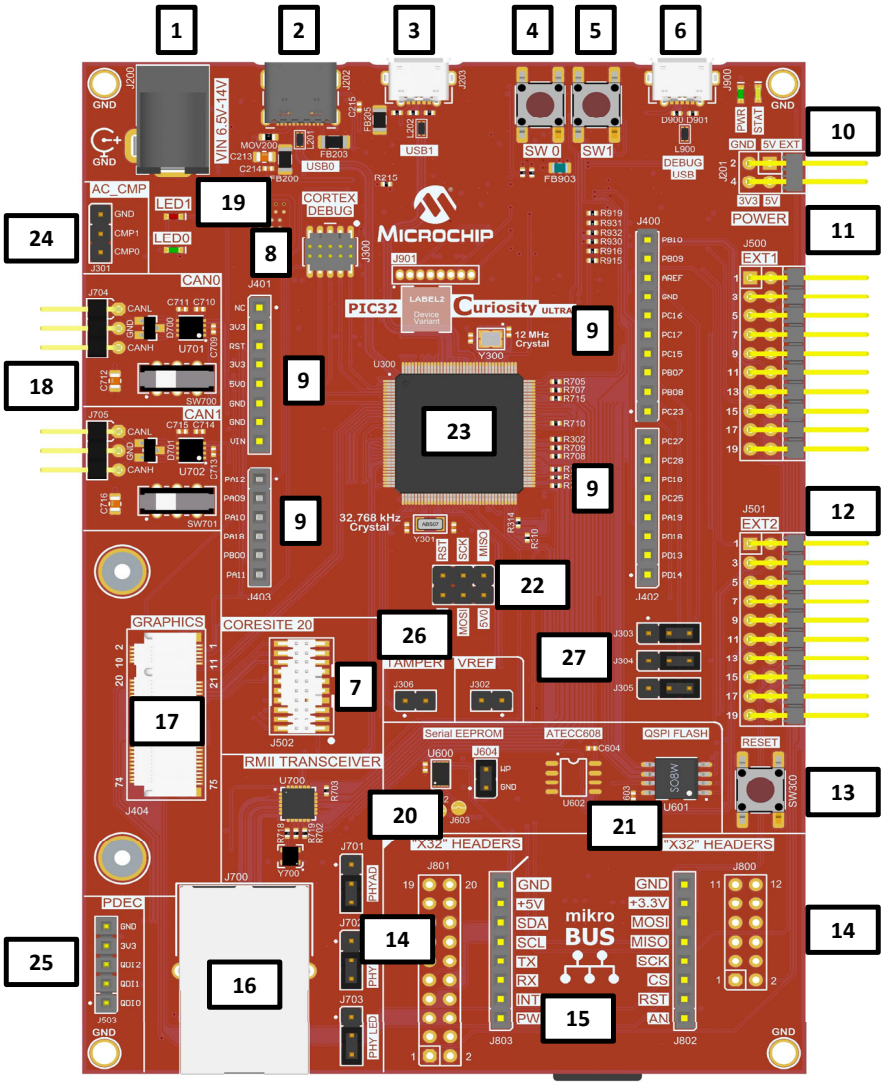

Table 2-1. PIC32CK SG01/GC01 Curiosity Ultra Development Board Features and Location

Number	Description of item
1	2.5 mm Barrel 6.5V-14V Power Input
2	USB Type-C Host/Device DRD
3	USB 2.0 A/B Host/Device DRD
4	User Switch 0
5	User Switch 1

© 2024 Microchip Technology Inc. and its subsidiaries

.....continued	
Number	**Description of item**
6	PKoB USB
7	Coresite 20-pin Debug Interface
8	Coretex® 10-pin Debug Interface
9	Arduino Shield Headers
10	External Power Header
11	EXT1 Header
12	EXT2 Header
13	Reset Switch
14	X32 Audio Headers
15	mikroBUS Headers
16	Ethernet Interface
17	Graphics Interface
18	CAN Interface Headers
19	User LED0/LED1
20	Serial EEPROM
21	QSPI Flash
22	UNO SPI Header
23	PIC32CK
24	Analog Comparator
25	PDEC Interface Headers
26	Tamper Detect Pins
27	Supply Controller (SUPC) and PDEC jumpers (1)

Note:

1. The J303 and J304 jumpers are for PDEC, and the J305 jumper is for SUPC.

Table 2-2. PIC32CK SG01/GC01Microchip Total System Solutions (TSS)

TSS Component	Qty (per board)	Function
TN2106K1-G	1	N-Channel MOSFET
MIC24052YJL-TR	1	SMPS Buck Regulator
MCP1501T-20E/CHY	1	MCHP IC VREF SERIES 0.1% SOT23-6
MCP1727T-3302E/MF	1	3.3V LDO
MIC2005A-1YM5-TR	2	Power Switch
ATSAME70N21B-ANT	1	PKoB MCU
24LC256T-I/MS	1	Serial EEPROM
PIC32CK2051SG01144-I/4KB or PIC32CK2051GC01144-I/4KB	1	Target MCU
24LC256T-I/MS	1	Serial EEPROM 256KB
SST26VF032BAT-104I/SM	1	QSPI Flash
KSZ8091RNACA-TR	1	Ethernet PHY
ATA6561-GBQW	2	CAN Transceiver
VXM8-9014-12M0000000	1	Oscillator 12.0000 MHz
VMK3-9005-32K7680000	1	XTAL 32.768 kHz
DSC1001DI5-025.0000 (1)	1	Oscillator 25.0000 MHz
AT24MAC402-MAHM-T	1	Serial EEPROM 2KB
DSC6011JI2B-012.0000	1	Oscillator 12.0000 MHz

© 2024 Microchip Technology Inc. and its subsidiaries

Note:

1. For designs that are targeting Ethernet compliance testing, a very low jitter solution, such as the Microchip MEMS Oscillator DSC1101DI5-025.0000 is recommended.

2.2 System Block Diagram

The following figure illustrates a high-level block diagram of the PIC32CK SG01/GC01 Curiosity Ultra development board.

Figure 2-2. PIC32CK SG01/GC01 Curiosity Ultra System Block Diagram

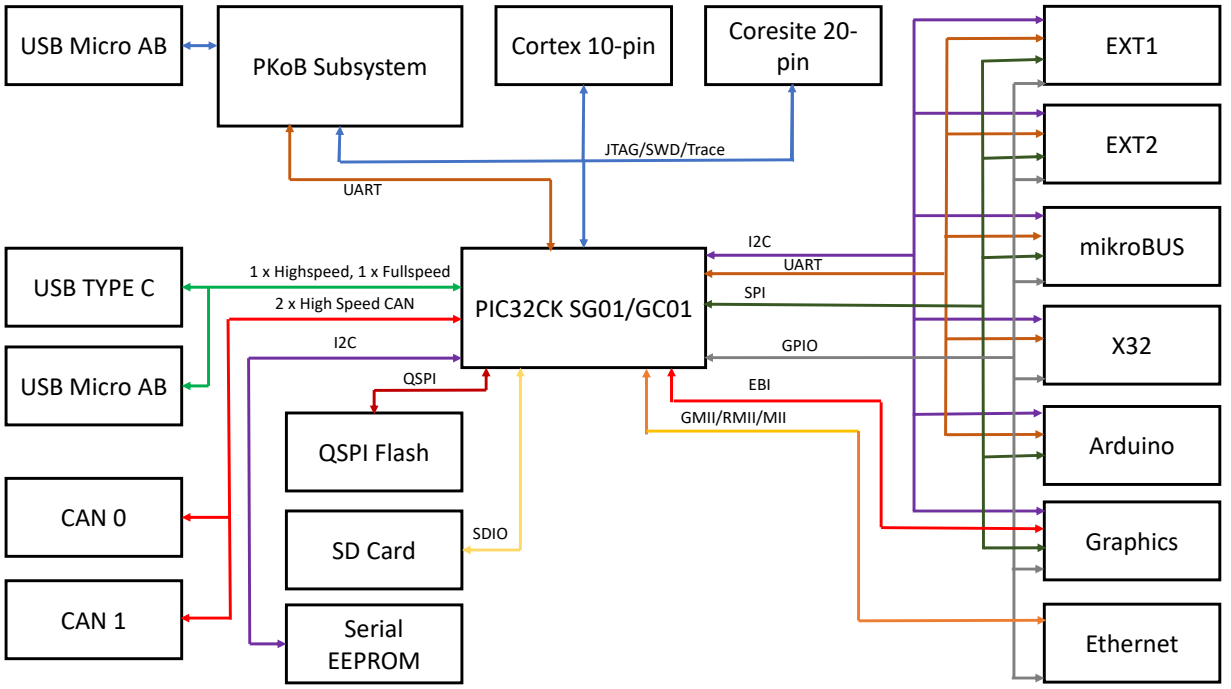

2.3 Power Block Diagram

The following figure illustrates a high-level block diagram of the power system on the PIC32CK SG01/GC01 Curiosity Ultra development board. The development board can be powered through a 5V supply available from the USB connector for the PKoB4 debugger or through an external 5V or 3.3V supply which can be connected through a 2 x 2 header, J2.

Figure 2-3. PIC32CK SG01/GC01 Curiosity Ultra Power Block Diagram

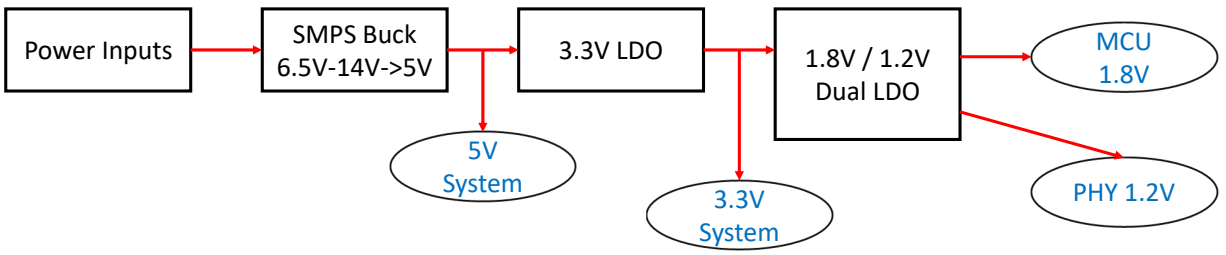

2.4 mikroBUS Socket

One mikroBUS socket, J503-J504, is available on the development board. This socket can be used to expand the functionality using the MikroElectronika Click board™. The mikroBUS connector consists

© 2024 Microchip Technology Inc. and its subsidiaries

of two 1x8 female headers with SPI, I2C, UART, RST, PWM, analog, and interrupt lines as well as 3.3V, 5V, and GND power lines.

Table 2-3. mikroBUS Socket Pinout

mikroBUS Pin Number	mikroBUS Pin Name	Description	Port
1	AN	Analog	PB11
2	RST	Reset	PD21
3	CS	SPI Chip Select	PD15
4	SCK	SPI Clock	PC16
5	MISO	SPI Host In Client Out	PC17
6	MOSI	SPI Host Out Client In	PC15
7	+3.3V	VCC-3.3V power	VCC_P3V3
8	GND	Reference Ground	GND
9	GND	Reference Ground	GND
10	+5V	VCC-5V power	P5V0
11	SDA	I2C Data	PB09
12	SCL	I2C Clock	PB10
13	TX	UART Transmit	PD13
14	RX	UART Receive	PD14
15	INT	Hardware Interrupt	PD18
16	PWM	PWM Output	PB12

2.5 Xplained Pro Standard Extension Header

The PIC32CK SG01/GC01 Curiosity Ultra development board has two Xplained Pro compatible interfaces that enable the use of existing expansion boards. Each interface consists of a dual-row, 30-pin, 100 mil, 90 degree extension male header, while Xplained Pro extensions have their female counterparts. The extension headers can be used to connect a variety of Xplained Pro extension boards or to access the pins of the target MCU directly.

Note: Not all pins are connected.

© 2024 Microchip Technology Inc. and its subsidiaries

The pinout description for the Xplained Pro Standard Extension Header1 and Header 2 are listed in the following tables.

Table 2-4. EXT 1 Header Pinout

Pin number	Name	Description	Port
1	ID_EXT1	Communication line to the ID chip on an extension board	Connected to PKoB4
2	GND	Ground	-
3	ADC0(+)	Analog-to-digital converter (ADC), alternatively positive part of differential ADC	PA04
4	ADC0(-)	Analog-to-digital converter, alternatively negative part of differential ADC	PA05
5	GPIO1	General purpose I/O	PD18
6	GPIO2	General purpose I/O	PC26
7	PWMH1	High-Side PWM	PC01
8	PWML1	Low-Side PWM	PC02
9	GPIO3	General purpose I/O	PC19
10	GPIO4	General purpose I/O	PB15
11	SDA2	Data line for I^2C interface. Always implemented, bus type	PB09
12	SCL2	Clock line for I^2C interface. Always implemented, bus type.	PB10
13	RX2	Receiver line of target device UART	PB22
14	TX2	Transmitter line of target device UART.	PB21
15	SS2	SPI Select or General purpose I/O	PC14
16	MOSI	Host Out Client In (MOSI) line of serial peripheral interface. Always implemented, bus type.	PC15
17	MISO	Host In Client Out (MISO) line of serial peripheral interface. Always implemented, bus type.	PC17
18	SCK2	Clock for serial peripheral interface. Always implemented, bus type	PC16
19	GND	Ground	-
20	VCC	Power for extension boards (3.3V)	-

Table 2-5. EXT 2 Header Pinout

Pin number	Name	Description	Port/Pin
1	ID_EXT2	Communication line to the ID chip on an extension board	Connected to PKoB4
2	GND	Ground	-
3	ADC1(+)	Analog-to-digital converter, alternatively positive part of differential ADC	PA06
4	ADC1(-)	Analog-to-digital converter, alternatively negative part of differential ADC	PA07
5	GPIO5	General purpose I/O	PC27
6	GPIO6	General purpose I/O	PC18
7	PWMH2	High-Side PWM	PB07
8	PWML2	Low-Side PWM	PB08
9	GPIO7	General purpose I/O	PC29
10	GPIO8	General purpose I/O	PC28
11	SDA2	Data line for I^2C interface. Always implemented, bus type	PB09
12	SCL2	Clock line for I^2C interface. Always implemented, bus type.	PB10
13	RX2	Receiver line of target device UART	PD14
14	TX2	Transmitter line of target device UART.	PD13
15	SS3	SPI Client Select or General purpose I/O	PC23
16	MOSI	Host Out Client In (MOSI) line of serial peripheral interface. Always implemented, bus type.	PC15
17	MISO	Host In Client Out (MISO) line of serial peripheral interface. Always implemented, bus type.	PC17

© 2024 Microchip Technology Inc. and its subsidiaries

.....continued			
Pin number	Name	Description	Port/Pin
18	SCK2	Clock for serial peripheral interface. Always implemented, bus type	PC16
19	GND	Ground	-
20	VCC	Power for extension boards (3.3V)	-

Note:

1. The PWMH2 and PWML2 pins (i.e., pin 7 and pin 8) share functionality with D9 and D10 of the Arduino Header or with QI1 and QI2 of the PDEC, depending on the position of the jumper on J303 and J304.

2.6 Dual CAN Interface

The PIC32CK SG01/GC01 Curiosity Ultra development board offers access to two of the CAN interfaces on the J704 and J705 connectors.

Table 2-6. CAN0 Interface J704

Pin	Name	CAN Function
1	CANL	CAN Low signal
2	GND	GND
3	CANH	CAN High signal

Table 2-7. CAN1 Interface J705

Pin	Name	CAN Function
1	CANL	CAN Low signal
2	GND	GND
3	CANH	CAN High signal

2.7 Graphics Connectors or GFX Card Interface

The PIC32CK SG01/GC01 Curiosity Ultra development board is designed with a modular graphics interface. This interface enables using several graphics cards, which allow for expandability and different use cases. A 565 adapter card can be purchased separately, which takes 16-bit parallel LCD data and converts it to 24-bit data. This card also provides access to ADC for resistive touch-screens, therefore an external controller is not needed. Refer to the following table for pin descriptions.

Table 2-8. Graphics Interface Pinout

Pin Number	Name	Description	Port/Pin
1	GND	Ground	-
2	GND	Ground	-
3	MCLR	Host Clear, Controlled by the debuggers. Allows for a complete system reboot.	TARGET_RESETn
4	IRQ1 (LCD Touch)	Interrupt request line for cap touch device	PF1
5	5.0V VCC	5.0V	-
6	IRQ2 (Q Touch)	Interrupt request line for Q touch devices	-
7	LCDEN	LCD Data Enable	PC5
8	IRQ3 (Display Controllers)	Interrupt request line for external display controllers	-
9	LCDHSYNC/NCS3	LCD Horizontal Sync	PC27
10	IRQ4 (Resistive touch)	Interrupt request line for resistive touch controllers	-
11	LCDVSYNC/nWE	LEC Vertical Sync or Write enable (active-low)	PG4
12-19	non-pop	-	-
20	5.0V VCC	+5.0V	-

© 2024 Microchip Technology Inc. and its subsidiaries

.....continued

Pin Number	Name	Description	Port/Pin
21	LCDPCK/nRD	LCD pixel Clock or Read Enable (active-low)	PC6
22	I2C SDA	Data line for I^2C interface. Always implemented, bus type.	PB09
23	LCD D0	LCD Data bit 0	PA13
24	I2C SCL	Clock line for I^2C interface. Always implemented, bus type.	PB10
25	LCD D1	LCD Data bit 1	PA14
26	SPI SCK	Clock for serial peripheral interface. Always implemented, bus type.	PC16
27	LCD D2	LCD Data bit 2	PA15
28	SPI MOSI	Host Out Client In (MOSI) line of Serial Peripheral Interface.	PC15
29	LCD D3	LCD Data bit 3	PA16
30	SPI MISO	Host In Client Out (MISO) line of Serial Peripheral Interface.	PC17
31	LCD D4	LCD Data bit 4	PA17
32	SPI $\overline{SS}$	SPI Client Select	PD15
33	LCD D5	LCD Data bit 5	PA04
34	UART RX	Receiver line of target device UART (Not Implemented on this design)	-
35	LCD D6	LCD Data bit 6	PA05
36	UART TX	Transmitter line of target device UART. (Not Implemented on this design)	-
37	LCD D7	LCD Data bit 7	PA06
38	UART RTS	UART Ready To Send (Not Implemented on this design)	-
39	LCD D8	LCD Data bit 8	PA07
40	UART CTS	UART Clear To Send (Not Implemented on this design)	-
41	LCD D9	LCD Data bit 9	PA08
42	LCD PWM	LCD PWM back light control	PA20
43	LCD D10	LCD Data bit 10	PB11
44	PWM2	Pulse-Width Modulation,	PA23
45	LCD D11	LCD Data bit 11	PB12
46	GPIO1	General purpose I/O	-
47	LCD D12	LCD Data bit 12	PB05
48	GPIO2	General purpose I/O	-
49	LCD D13	LCD Data bit 13	PB13
50	GPIO3	General purpose I/O	-
51	LCD D14	LCD Data bit 14	PB06
52	STBY/RST/GPIO4	Standby/Reset or general purpose I/O. For resetting devices attached to the GFX connector.	PC20
53	LCD D15	LCD Data bit 15	PB14
54	STBY/RST/GPIO5	Standby2/Reset2 or general purpose I/O (Not Implemented on this design)	-
55	LCD D16	LCD Data bit 16 (Not Implemented on this design)	-
56	ID pin	Communication line to the ID chip on an extension board	-
57	LCD D17	LCD Data bit 17 (Not Implemented on this design)	-
58	ADC 0	Analog-to-Digital Converter to MCU	-
59	LCD D18	LCD Data bit 18 (Not Implemented on this design)	-
60	ADC1	Analog-to-Digital Converter to MCU	-
61	LCD D19	LCD Data bit 19 (Not Implemented on this design)	-
62	ADC2	Analog-to-Digital Converter to MCU	-

© 2024 Microchip Technology Inc. and its subsidiaries

.....continued			
Pin Number	Name	Description	Port/Pin
63	LCD D20	LCD Data bit 20 (Not Implemented on this design)	-
64	ADC3	Analog-to-Digital Converter to MCU	-
65	LCD D21	LCD Data bit 21 (Not Implemented on this design)	-
66	ADC4	Analog-to-Digital Converter to MCU	-
67	LCD D22	LCD Data bit 22 (Not Implemented on this design)	-
68	ADC5	Analog-to-Digital Converter to MCU	-
69	LCD D23	LCD Data bit 23 (Not Implemented on this design)	-
70	ADC6	Analog-to-Digital Converter to MCU	-
71	3.3V VCC	+3.3V VCC	-
72	ADC7	Analog-to-Digital Converter to MCU	-
73	GND	Ground	-
74	3.3V VCC	+3.3V VCC	-
75	GND	Ground	-
M1	GND TAB	Mounting Tab	-
M2	GND TAB	Mounting Tab	-

2.8 X32 Audio Connectivity

The PIC32CK SG01/GC01 Curiosity Ultra development board provides an audio connection through the X32 interface to the two main audio modules in the chip, such as the SSC and the I^{2}S. On this board the SSC interface is considered as the main audio interface as show in the following figure.

There is a 32-pin interface to the board to support the audio codec, DACs, and Bluetooth radios. This interface has two audio supply interfaces, such as the SSC and the I^{2}S. In addition to this, other control lines and data interfaces are available.

Figure 2-4. X32 Audio Connector

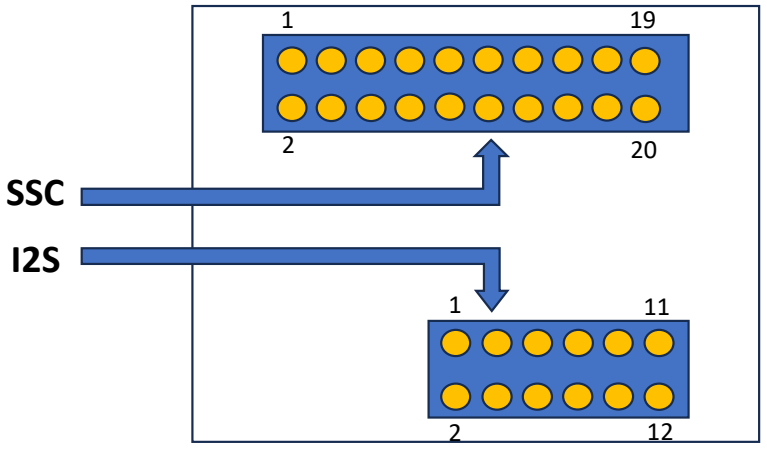

Table 2-9. X32 Audio Interface Pin Description

XC-32 Pin Number	XC-32Pin Name	Description	Port
1	GND	GND	-
2	GND	GND	-
3	UART_RX	UART RX, MCU receive from DB	PB22
4	UART_CTS	UART Clear to Send	PA28
5	UART_TX	UART TX, transmit from MCU to DB	PB21

© 2024 Microchip Technology Inc. and its subsidiaries

.....continued

XC-32 Pin Number	XC-32Pin Name	Description	Port
6	UART_RTS	UART Request to Send	PA26
7	I2C_SCL	Clock line for I^2C interface	PB10
8	STBY/RST_B	Standby/Reset control	PC20
9	I2C_SDA	Data line for I^2C interface	PB09
10	DMM/I2S_WS	Audio Word Select/ Left Right Clock	PD13
11	I2S0_DIN	Audio into MCU, out from CODEC	PD16
12	I2S0_SCK	Audio clock	PD14
13	I2S0_DOUT	Audio out of MCU, in to CODEC/DAC	PD17
14	I2S0_MCLK	Reference clock #1	PC05
15	GND	GND	-
16	GND	GND	-
17	NC	Legacy hold over	-
18	VCC_P3V3	3.3 VDC Power Rail	-
19	NC	Legacy hold over	-
20	VCC_P5V0	5.0 VDC Power Rail	-
21 (1)	I2S1_WS	Audio Word Select/ Left Right Clock	-
22 (2)	ID_3	Analog-to-Digital Converter to read voltage on the daughter card	-
23 (3)	I2S1_SCK	Audio Clock	-
24 (4)	ADC	ADC channel	PA09
25 (5)	I2S1_DIN	Audio into MCU, out from CODEC	-
26 (6)	NC	-	-
27 (7)	I2S1_DOUT	Audio out of MCU, into CODEC/DAC	-
28 (8)	NC	-	-
29 (9)	I2S1_MCLK	Reference clock #2	-
30 (10)	NC	-	-
31 (11)	GND	GND	-
32 (12)	GND	GND	-

2.9 Arduino Uno R3 Interface

The PIC32CK SG01/GC01 Curiosity Ultra development board has an Arduino Uno R3 compatible header which enables the use of Arduino shields. Peripherals, such as ADC, SPI, I^2C, UART, and PWM of the PIC32CK MCU can be interfaced with Arduino shields using the Arduino Uno R3 interface.

The pin map between the PIC32CK device and the Arduino Uno R3 interface is given in the following table.

Table 2-10. Pin Map for the Arduino Uno R3 Interface

Arduino Uno R3 Pin Name	PIC32CK SG01/GC01 Pin Name
A0	PA12
A1	PA09
A2	PA10
A3	PA18
A4	PB00
A5	PA11
D0/RX	PD14
D1/TX	PD13
D2	PD18

© 2024 Microchip Technology Inc. and its subsidiaries

.....continued	
Arduino Uno R3 Pin Name	PIC32CK SG01/GC01 Pin Name
D3	PD19
D4	PC25
D5	PC18
D6	PC28
D7	PC27
D8	PC23
D9	PB08
D10	PB07
D11	PC15
D12	PC17
D13	PC16
D14/SDA	PC25
D15/SCL	PC26

2.10 Ethernet

The PIC32CK SG01/GC01 Curiosity Ultra kit supports 10/100 BASE-T Ethernet with an on-board PHY and modular Ethernet jack.

2.11 Button and LED

The PIC32CK SG01/GC01 Curiosity Ultra kit offers a user button and an LED. The following table provides the function, description, and the port on the MCU.

Table 2-11. Button and LED Pin Description

Function	Description	Type	Port
User SW0	User Switch 0	Digital Input	PB26
User SW1	User Switch 1	Digital Input	PD02
User LED0	User LED 0	Digital Output	PD20
User LED1	User LED 1	Digital Output	PB25

2.12 PICKit™ On-Board 4

The MPLAB® PICkit On-Board 4 (PKoB4) is a new generation In-Circuit Debugger. The MPLAB PKoB4 programs faster than its predecessor and is designed to use a high-speed 2.0 USB interface, which provides a feature rich debugging experience through one USB cable. The PKoB4 is intended to support programming, debugging, and a Data Gateway interface.

The MPLAB PKoB4 In-Circuit Debugger is compatible with these platforms:

- Microsoft Windows®7 or later
- Linux®
- macOS®

The MPLAB PKoB4 In-Circuit Debugger system provides the following advantages:

Features/Capabilities:

- Connects to computer through high-speed USB 2.0 (480 Mbits) cable
- Programs devices using MPLAB X IDE or MPLAB IPE
- Supports multiple hardware and software breakpoints, stopwatch, and source code file debugging
- Debugs the application in real time

© 2024 Microchip Technology Inc. and its subsidiaries

- Sets break points based on internal events
- Monitors internal file registers
- Debugs at full-speed
- Configures pin drivers
- Virtual COM support, which can establish UART communication between the Host PC and the target device using the following UART Configuration:
  - Baud rate: 115,200 bps
  - Only 8-bit character format
  - No hardware flow control
  - One stop-bit
- Field-upgradeable through an MPLAB X IDE firmware download
- Adds new device support and features by installing the latest version of MPLAB X IDE (available as a free download at https://www.microchip.com/mplabx/)
- Indicates debugger status through on-board LEDs

Performance/Speed:

- More and faster memory
- A Real-Time Operating System (RTOS)
- No firmware download delays incurred when switching devices
- A 32-bit MCU running at 300 MHz

2.13 Recovery Method

If the PKoB4 becomes unresponsive, follow these steps to recover the tool:

1. With the PIC32CK SG01/GC01 Curiosity Ultra development board still powered, short the 2 pads for approximately 10 seconds.

Figure 2-5. PKoB EBR Reset

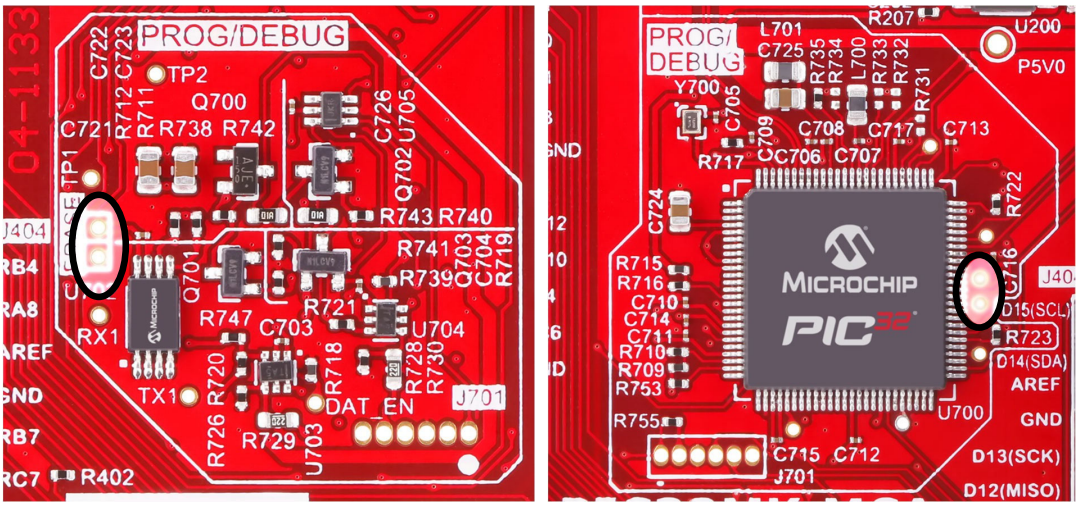

2. Open the latest version of MPLAB X IDE.
3. Click on the **Projects** tab and then select the project.
4. From the main menu, click **Debug**, the Debug Project properties page will be displayed.
5. Select **Hardware Tool Emergency Boot Firmware Recovery**.

© 2024 Microchip Technology Inc. and its subsidiaries

Figure 2-6. MPLAB X IDE Interface

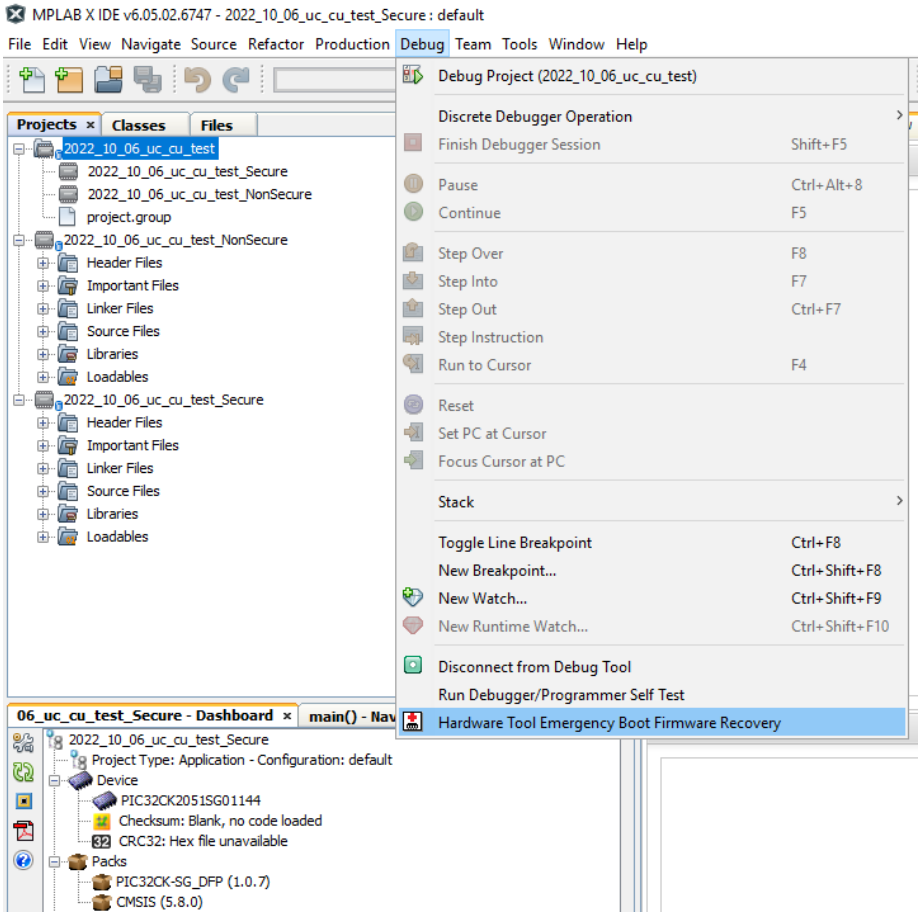

6. Follow the onscreen instructions to reset the tool to factory conditions.

For additional information on PKoB4, refer to the “MPLAB® PICkit4 User’s Guide" *(DS50002751)*, which is available for download at the following location: ww1.microchip.com/downloads/en/DeviceDoc/MPLAB%20PICkit%204%20ICD%20Users%20Guide%20DS50002751C.pdf

2.14 Demonstration Firmware Application

The demonstration firmware application comes programmed on the Curiosity Pro board. The project is also available in the downloadable materials. Some general functions of the board are available to exercise in the programmed version.

1. Connect to the VCP using a terminal application, such as Tera Term.
2. Perform Serial Port setup as shown below:

© 2024 Microchip Technology Inc. and its subsidiaries

Figure 2-7. Tera Term Serial Port Setup

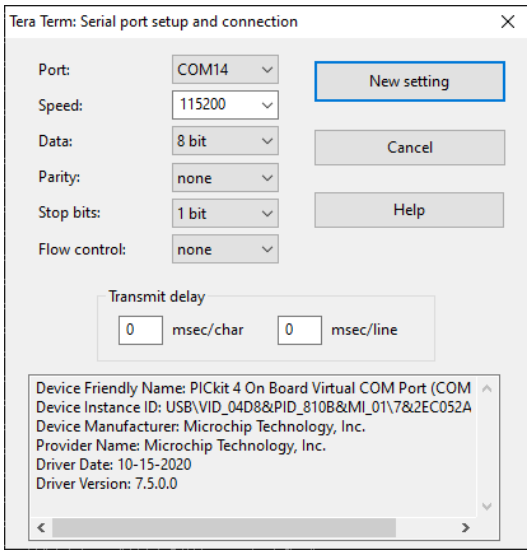

3. Once connected to the terminal application, a list of available commands and functions can be listed typing the code `help<enter>`. Additional materials and information can be found on the product web page.

© 2024 Microchip Technology Inc. and its subsidiaries

3. Hardware

3.1 Schematics

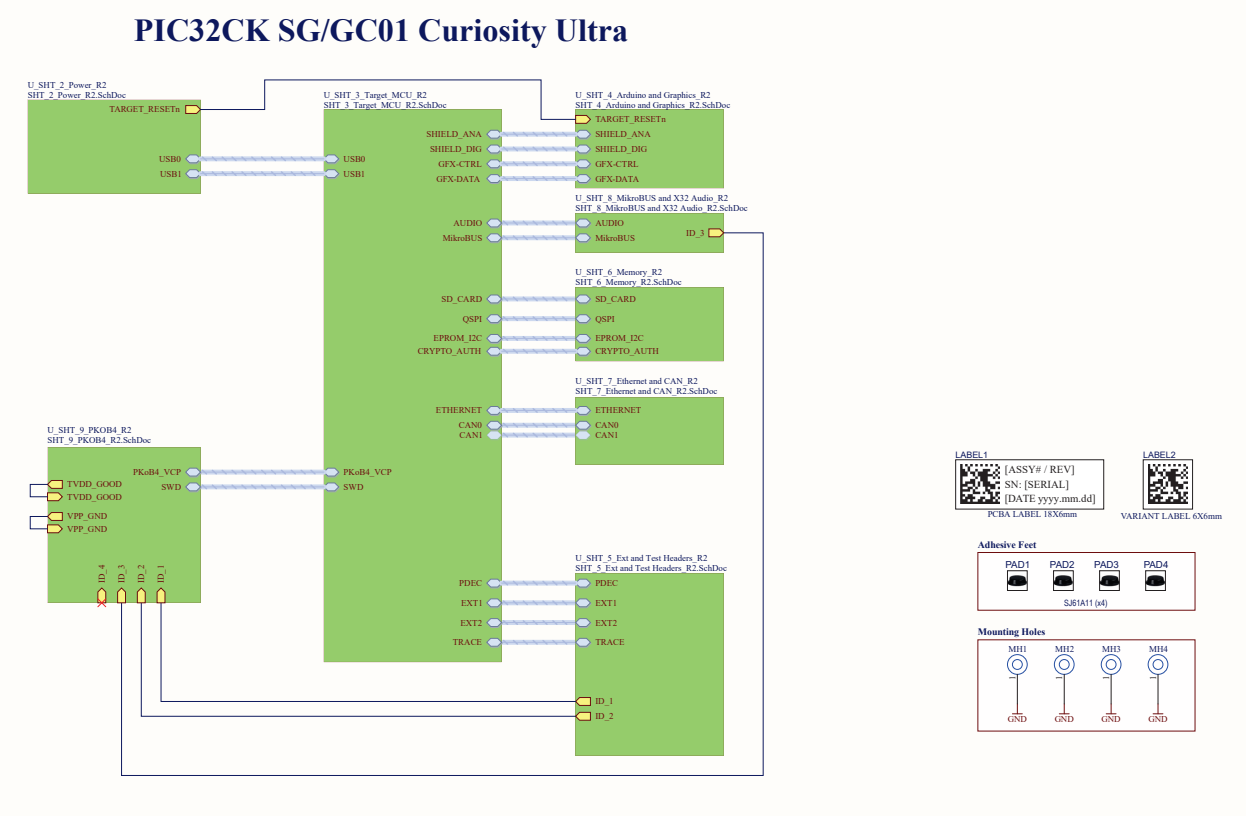

© 2024 Microchip Technology Inc. and its subsidiaries

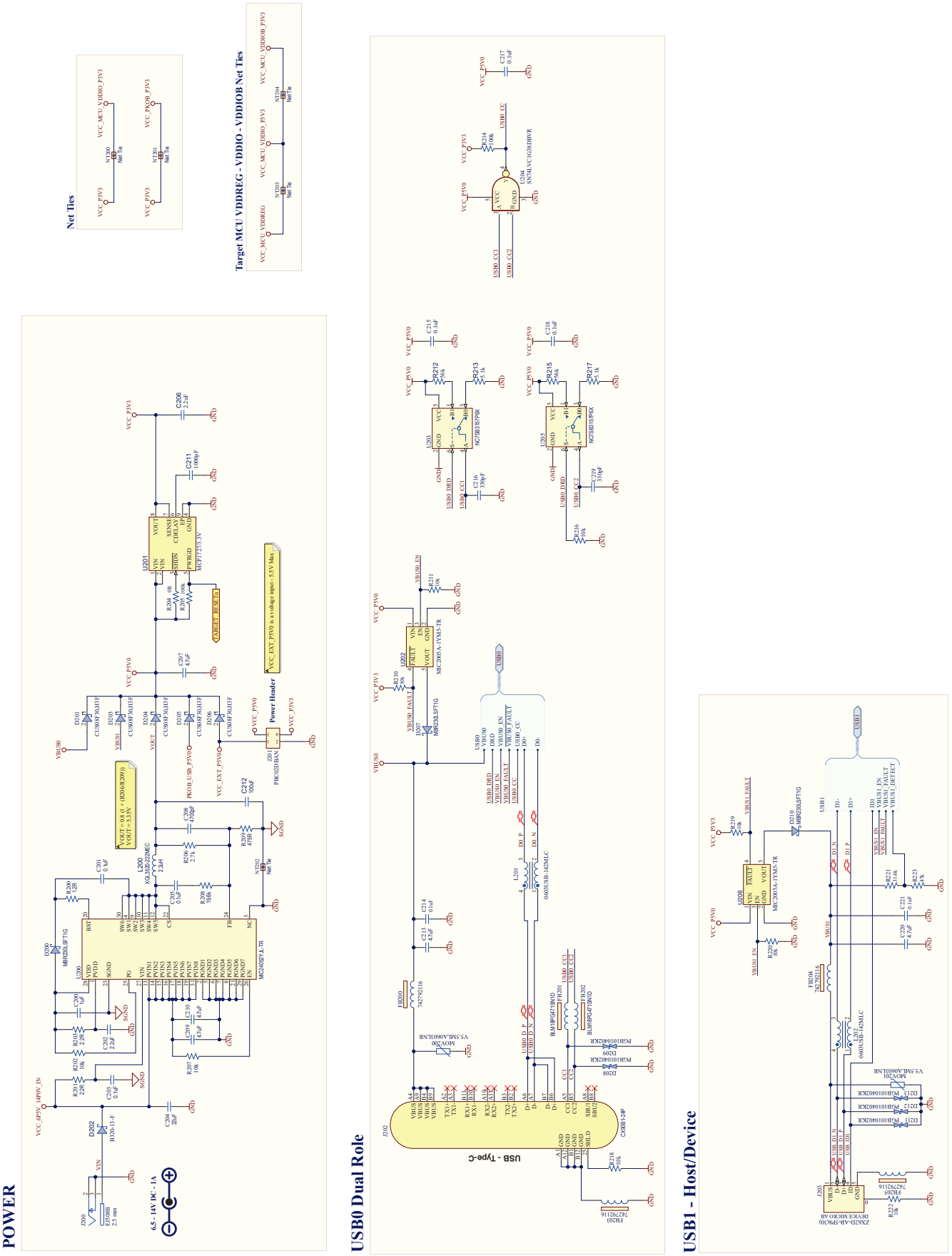

© 2024 Microchip Technology Inc. and its subsidiaries

PICKit on Board 4

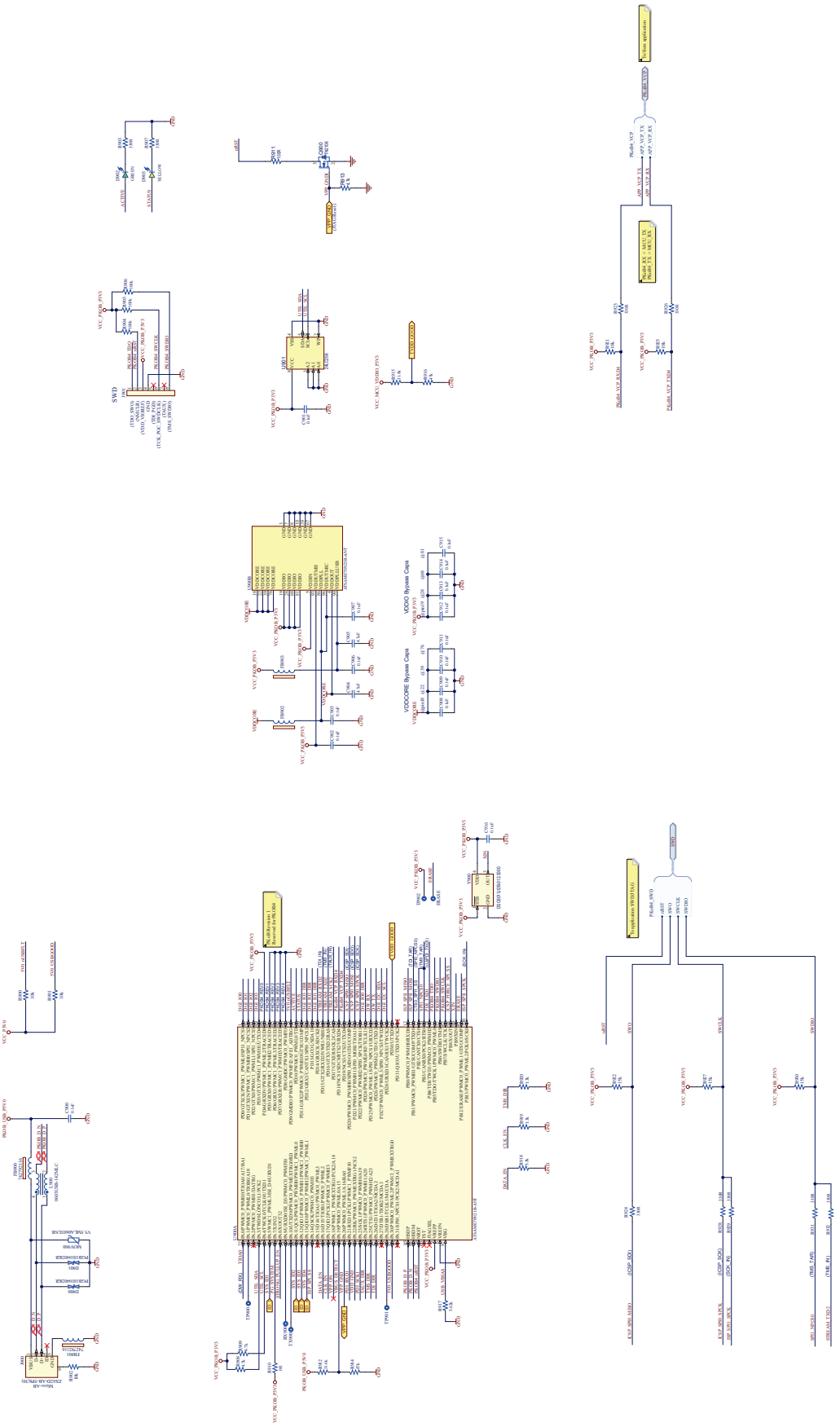

© 2024 Microchip Technology Inc. and its subsidiaries

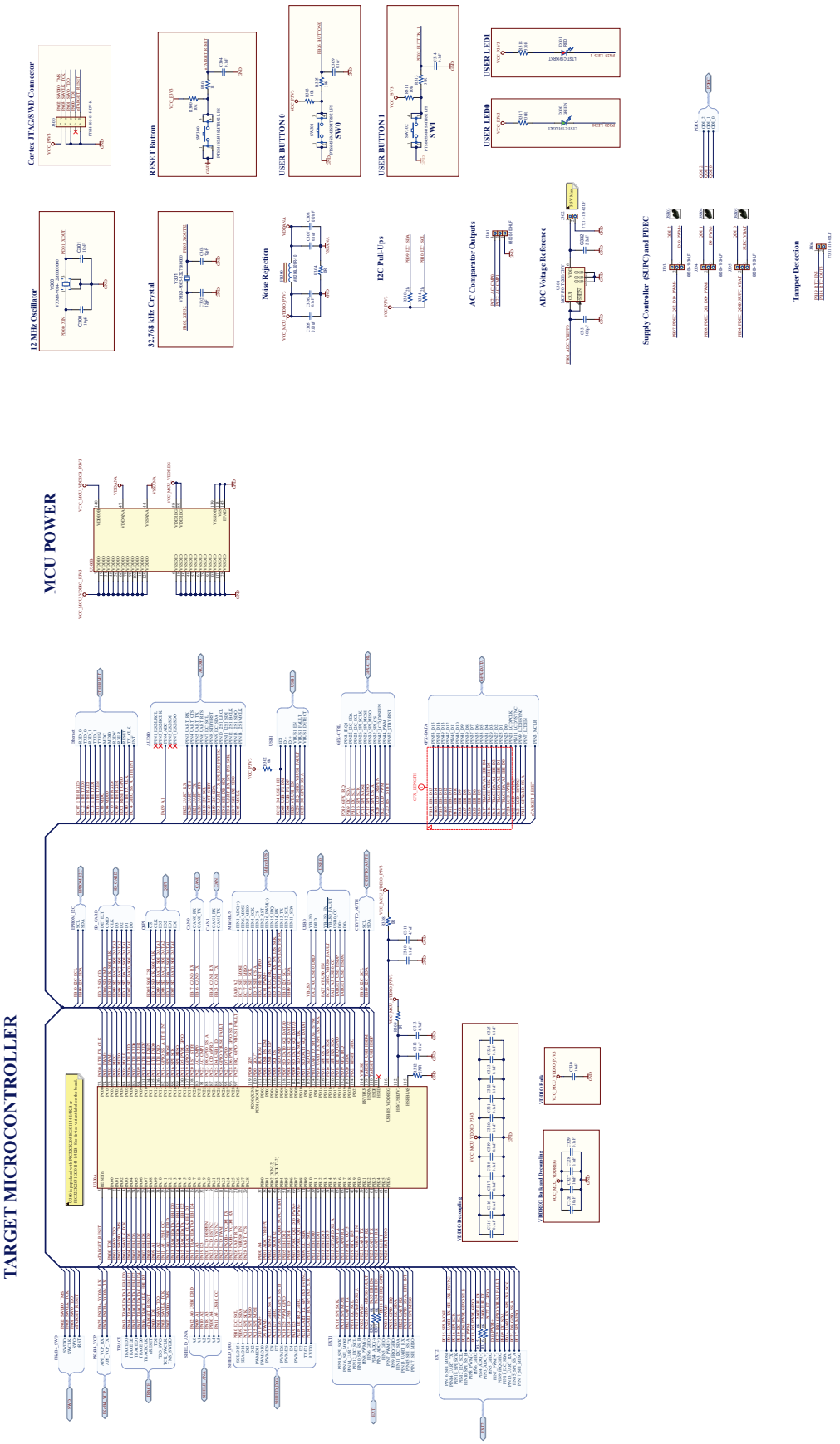

© 2024 Microchip Technology Inc. and its subsidiaries

ARDUINO UNO COMPATIBLE HEADERS

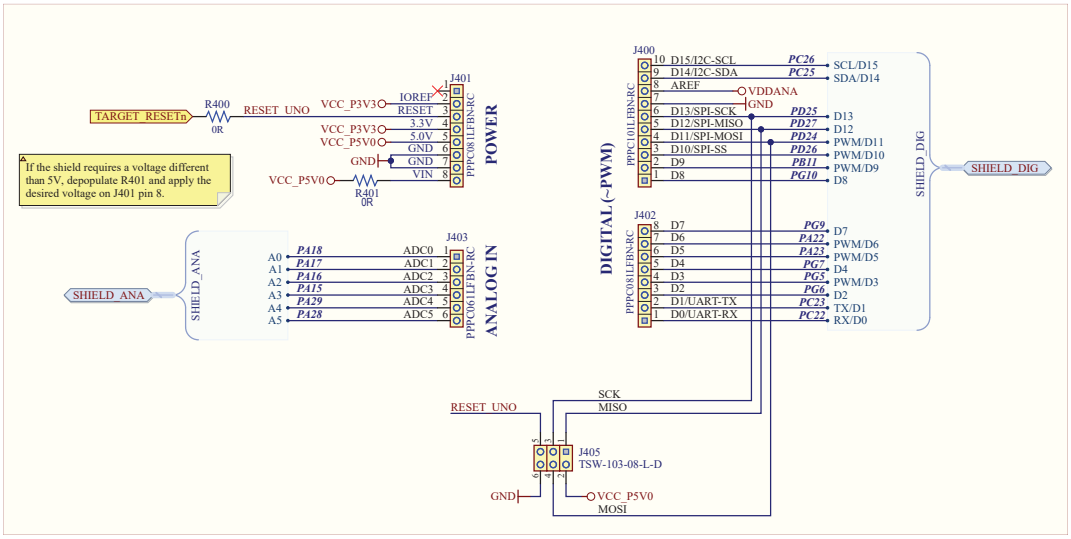

GRAPHICS CONNECTOR

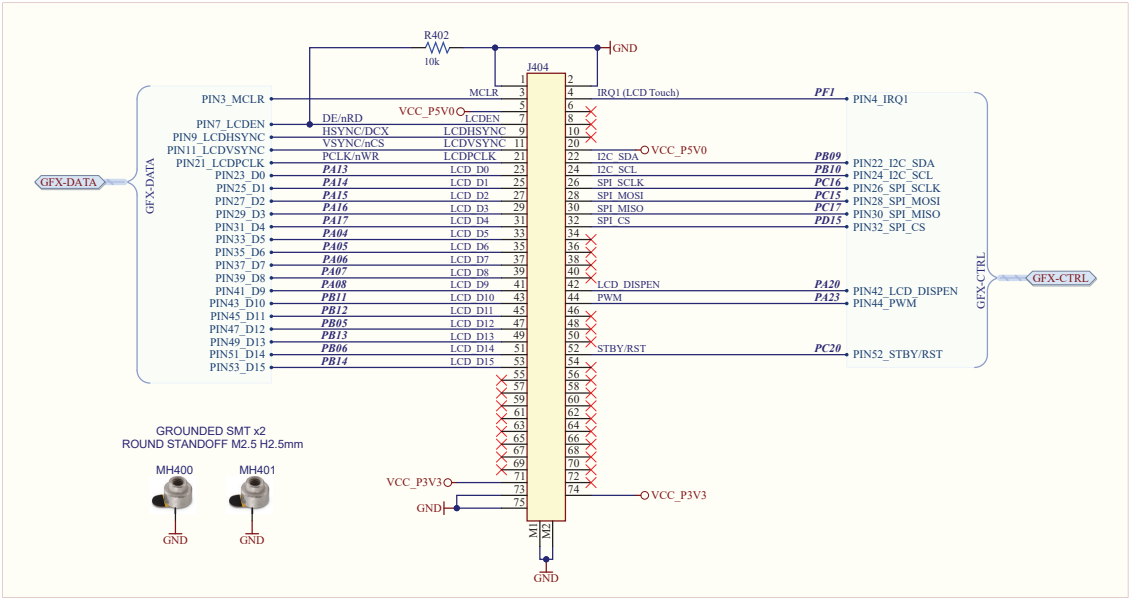

© 2024 Microchip Technology Inc. and its subsidiaries

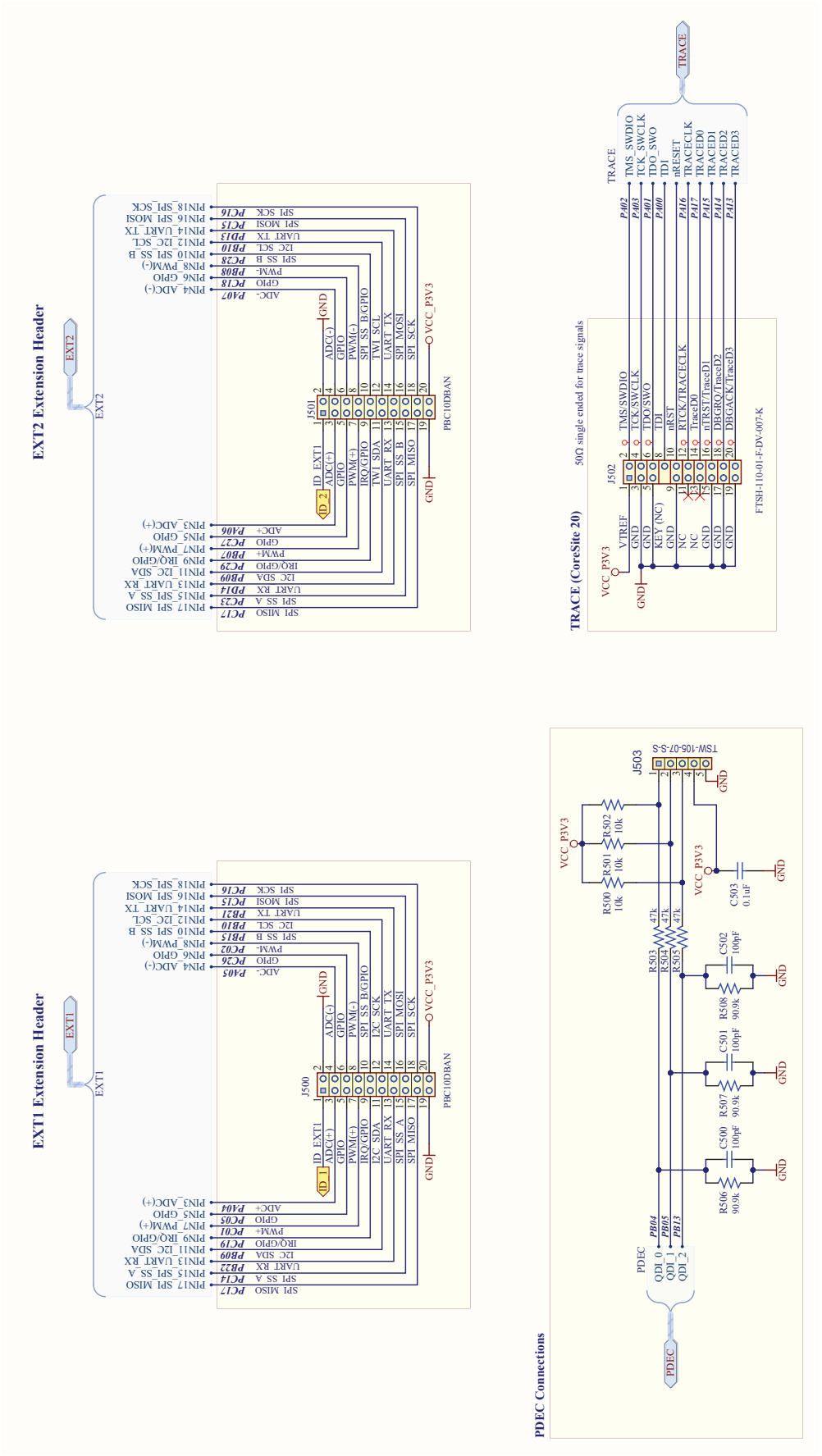

© 2024 Microchip Technology Inc. and its subsidiaries

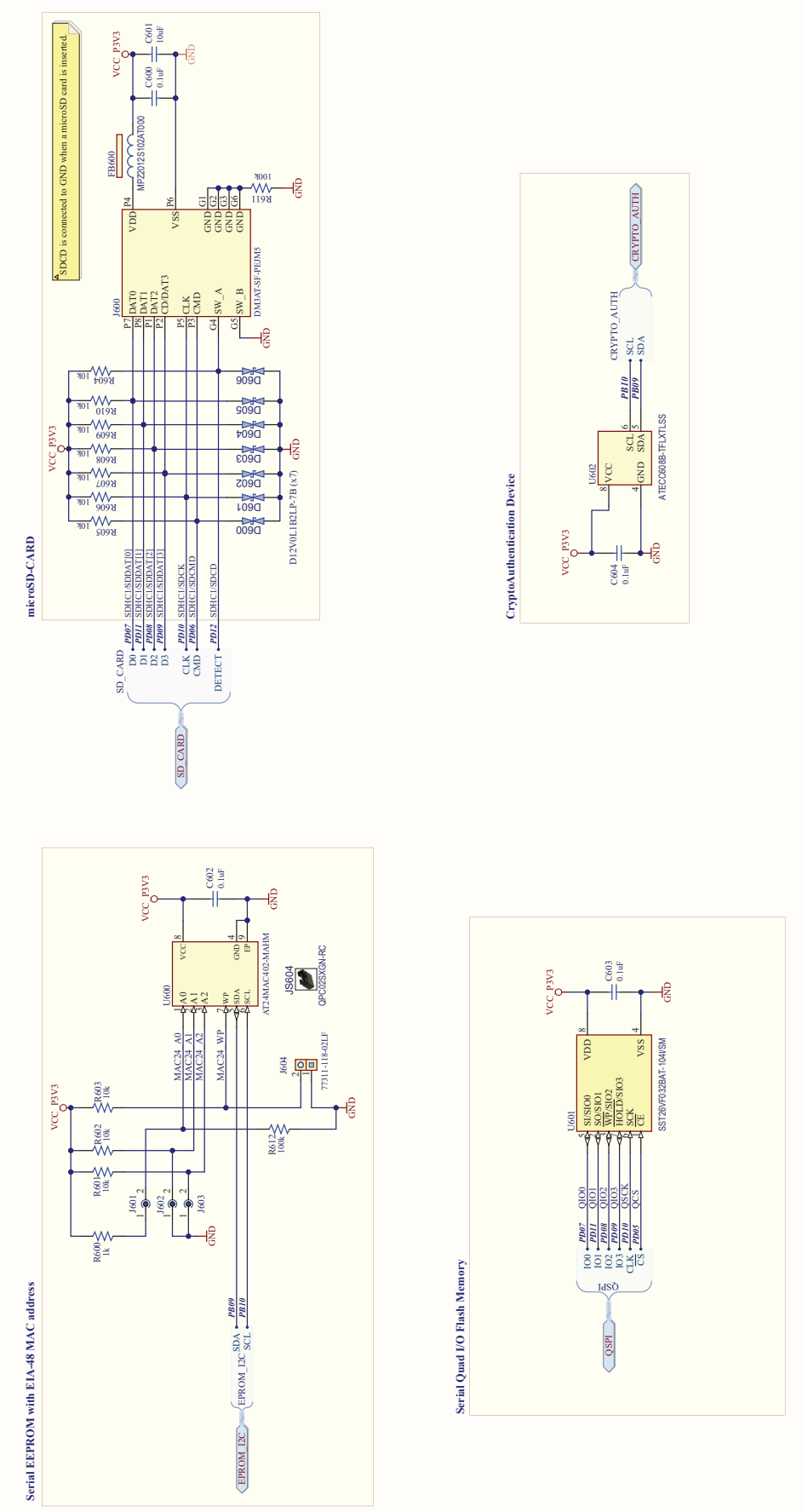

© 2024 Microchip Technology Inc. and its subsidiaries

Transceiver Strap-In Options

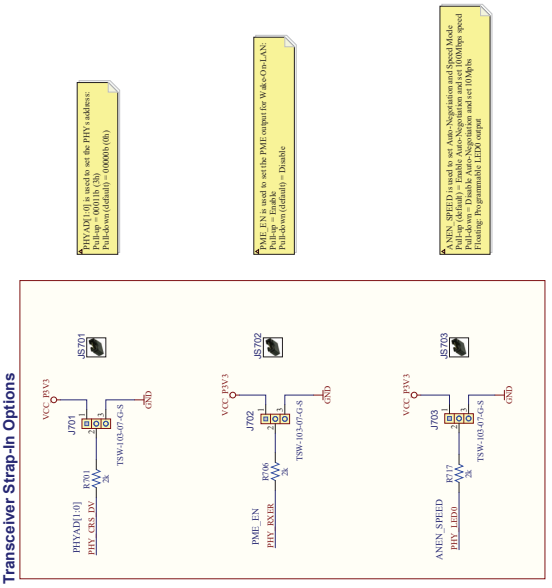

Ethernet Transceiver and RJ45 Connector

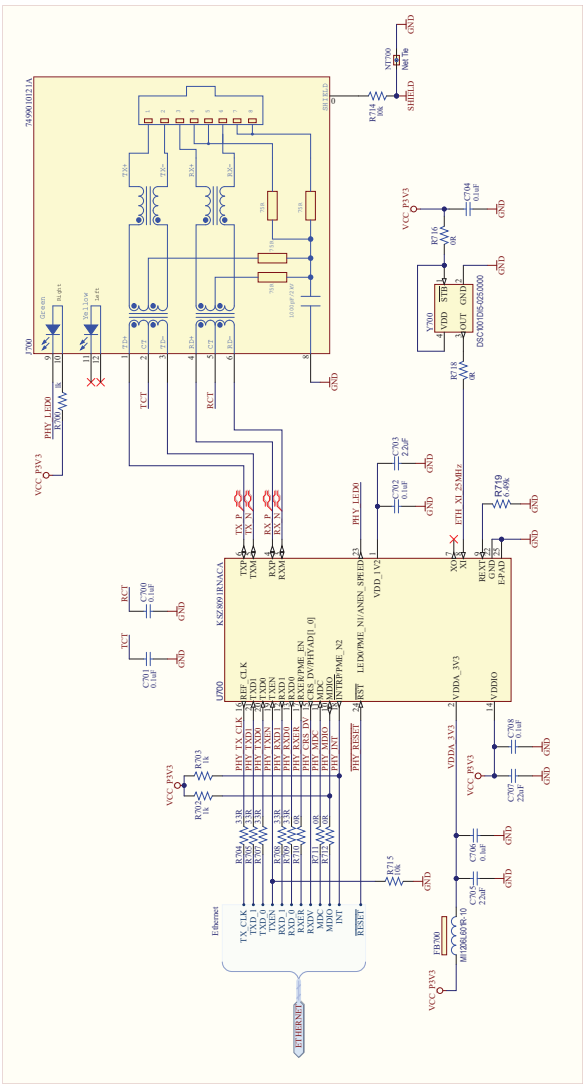

CAN Transceivers

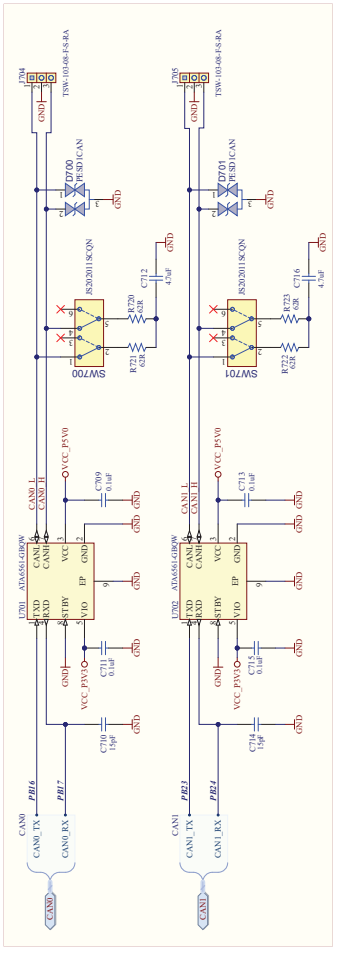

© 2024 Microchip Technology Inc. and its subsidiaries

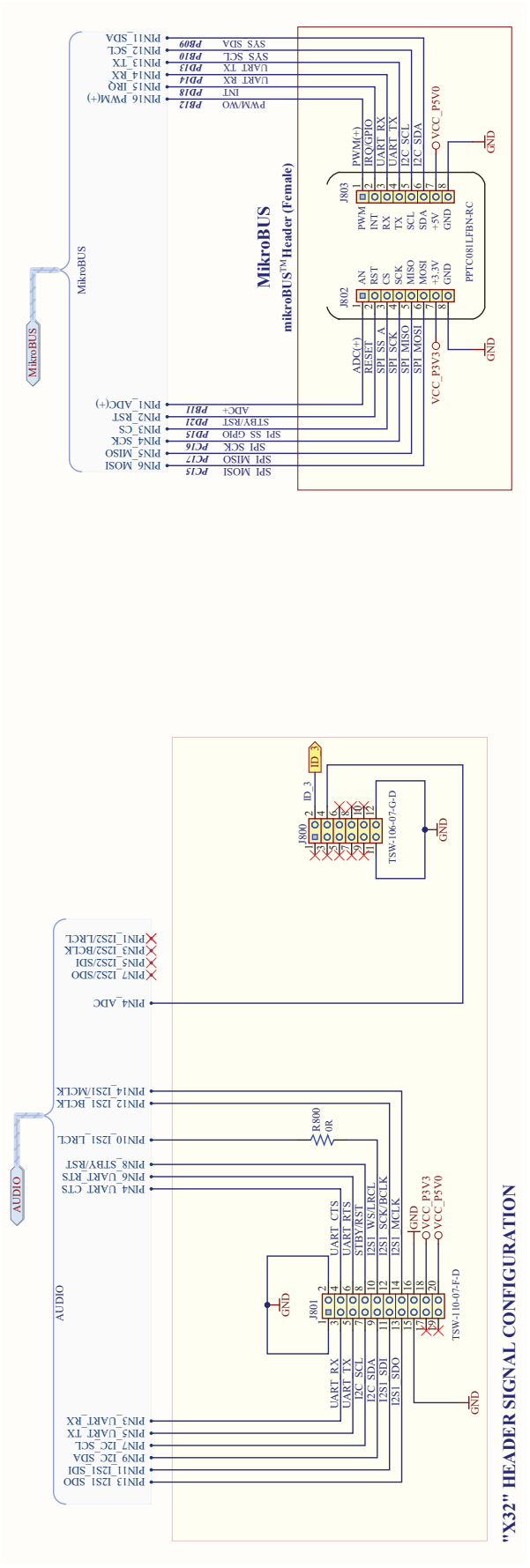

© 2024 Microchip Technology Inc. and its subsidiaries

3.2 Bill of Materials

Quantity	Designator	Description	Manufacturer	Manufacturer Part Number
1	C200	CAP CER 1 uF 16V 10% X7R SMD 0603	Wurth Electronics Inc	885012206052
16	C201, C205, C901, C902, C903, C906, C907, C908, C909, C910, C911, C912, C913, C914, C915, C916	CAP CER 0.1 uF 16V 10% X5R SMD 0201, CAP CER 0.1 µF 16V 10% X5R SMD 0201	Murata Electronics North America	GRM033R61C104KE84D
2	C202, C703	CAP CER 2.2 uF 16V 10% X7R SMD 0805	Murata	GRM21BR71C225KA12L
1	C203	CAP CER 0.1 uF 50V 10% X7R SMD 0805	AVX Corporation	08055C104KAT2A
1	C204	CAP CER 22 uF 25V 10% X5R SMD 1206	Murata Electronics North America Murata Electronics North America	GRM31CR61E226KE15L
2	C206, C332	CAP CER 2.2 uF 10V 10% X7S SMD 0402	Murata	GRM155C71A225KE11J
7	C207, C209, C210, C213, C220, C904, C905	CAP CER 4.7 uF 25V 10% X7R SMD 0805	TDK Corporation	C2012X7R1E475K125AB
1	C208	CAP CER 4700 pF 50V 10% X7R SMD 0402	Murata Electronics North America	GRM155R71H472KA01J
1	C211	CAP CER 1000 pF 50V 10% X7R SMD 0402	Samsung Electro-Mechanics	CL05B102KB5NFNC
1	C212	CAP CER 100 uF 10V 20% X5R SMD 1210	Samsung Electro-Mechanics	CL32A107MPVNNNE
38	C214, C221, C304, C306, C307, C309, C310, C312, C314, C315, C316, C317, C318, C319, C320, C321, C322, C323, C324, C325, C328, C329, C503, C600, C602, C603, C604, C700, C701, C702, C704, C706, C708, C709, C711, C713, C715, C900	CAP CER 0.1 uF 50V 10% X7R SMD 0402	Taiyo Yuden	UMK105B7104KV-FR
3	C215, C217, C218	CAP CER 0.1 uF 10V 10% X5R SMD 0402	KEMET	C0402C104K8PACTU
2	C216, C219	CAP CER 330 pF 50V 5% NP0 SMD 0402	Murata Electronics North AmericaMurata Electronics North America	GRM1555C1H331JA01D
2	C300, C301	CAP CER 10 pF 50V 1% NP0 SMD 0402	Walsin	0402N100F500CT
2	C302, C303	CAP CER 12 pF 50V 1% NP0 SMD 0402	Murata Electronics North America	GRM1555C1H120FA01D
2	C305, C308	CAP CER 10 nF 25V 10% X7R SMD 0402	Murata Electronics	GRM155R71E103KA01D
4	C311, C313, C712, C716	CAP CER 4.7 uF 25V 10% X5R SMD 0805	Murata	GRM21BR61E475KA12L
4	C326, C327, C330, C601	CAP CER 10 uF 10V 10% X5R SMD 0603	Samsung Electro-Mechanics	CL10A106KP8NNNC
1	C331	CAP CER 330 pF 25V 5% NPO SMD 0402	KEMET	C0402C301J3GAC7867
3	C500, C501, C502	CAP CER 100 pF 50V 1% C0G/NP0 SMD 0402	Murata Electronics	GCM1555C1H101FA16J
2	C705, C707	CAP CER 22 uF 6.3V 20% X6S SMD 0603	Murata	GRM188C80J226ME15D
2	C710, C714	CAP CER 15 pF 5% 50V C0G/NP0 SMD 0402 AEC-Q200	Murata Electronics North America	GCM1555C1H150JA16D

© 2024 Microchip Technology Inc. and its subsidiaries

.....continued

Quantity	Designator	Description	Manufacturer	Manufacturer Part Number
3	D200, D207, D210	DIO SCTKY MBR230LSFT1G 430 mV 2A 30V SMD SOD-123FL	ON Semiconductor	MBR230LSFT1G
5	D201, D203, D204, D205, D206	DIO SCTKY CUS08F30,H3F 30V 800 mA SOD-323	Toshiba Semiconductor and Storage	CUS08F30,H3F
1	D202	DIO SCKTY B320-13-F 500 mV 3A 20V DO-214AB_SMC	Diodes Incorporated	B320-13-F
7	D208, D209, D211, D212, D213, D900, D901	DIO TVS BIDIR PGB101 SMD 0402	Littlefuse	PGB1010402KR
2	D300, D902	DIO LED GREEN 2V 30 mA 35 mcd Clear SMD 0603	Lite-On Inc	LTST-C191KGKT
1	D301	DIO RED 2V 20 mA 54 mcd CLEAR SMD 0603	Lite-On Inc.	LTST-C191KRKT
7	D600, D601, D602, D603, D604, D605, D606	DIO TVS D12V0L1B2LP-7B 12VWM 25VC SMD 0402	Diodes Incorporated	D12V0L1B2LP-7B
2	D700, D701	TVS DIODE 24VWM 70VC SOT23	NXP Semiconductors	PESD1CAN,215
1	D903	DIO LED YELLOW 2.1V 20 mA 6mcd Clear SMD 0603	Lite-On	LTST-C190YKT
6	FB200, FB203, FB204, FB205, FB900, FB901	FERRITE 500R@100 MHz 2.5A SMD 1206	Wurth Electronics	742792116
2	FB201, FB202	FERRITE 470R@100 MHz 1A SMD 0603	Murata Electronics North America	BLM18PG471SN1D
2	FB300, FB700	FERRITE 600R@100 MHz 2A 80mOhm SMD 1206	Laird-Signal Integrity Products	MI1206L601R-10
1	FB600	FERRITE 1K@100 MHz 1.5A SMD 0805	TDK Corporation	MPZ2012S102AT000
2	FB902, FB903	FERRITE 2A 600R SMD 0805	TDK Corporation	MPZ2012S601AT000
1	J200	CON POWER 2.5 mm 5.5 mm Switch Slotted TH R/A	MPD (Memory Protection Devices)	EJ508B
1	J201	CON HDR-2.54 Male 2x2 Gold 5.84MH TH R/A	Sullins Connector Solutions	PBC02DBAN
1	J202	CON USB3.1 5200000499 TYPE-C FEMALE SMD R/A	Hirose Electric Co Ltd	CX90B1-24P
2	J203, J900	CON USB2.0 Micro-AB Female ZX62D-AB-5P8(30) TOP MOUNT TH R/A	Hirose Connector	ZX62D-AB-5P8(30)
1	J300	CON HDR-1.27 Male 2x5 Gold 3.05MH SMD VERT	Samtec	FTSH-105-01-F-DV-K
4	J301, J303, J304, J305	CON HDR-2.54 Male 1x3 Gold 5.84MH TH VERT	FCI	68000-103HLF
3	J302, J306, J604	CON HDR-2.54 Male 1x2 Gold 5.84MH TH VERT	FCI	77311-118-02LF
1	J400	CON HDR-2.54 Female 1x10 Gold TH VERT	Sullins Connector Solutions	PPPC101LFBN-RC
2	J401, J402	CON HDR-2.54 Female 1x8 Gold TH	Sullins Connector Solutions	PPPC081LFBN-RC
1	J403	CON HDR-2.54 Female 1x6 Gold TH VERT	Sullins Connector Solutions	PPPC061LFBN-RC
1	J404	CON EDGE MINI 0.5 mm 67P Female SMD R/A	TE Connectivity AMP Connectors	2199230-3
1	J405	CON HDR-2.54 Male 2x3 Gold 5.84MH TH VERT	Samtec	TSW-103-08-L-D
2	J500, J501	CON HDR-2.54 Male 2x10 Rotated 180 Degrees Gold TH RT ANGLE	Sullins Connector Solutions	PBC10DBAN

© 2024 Microchip Technology Inc. and its subsidiaries

.....continued

Quantity	Designator	Description	Manufacturer	Manufacturer Part Number
1	J502	CON HDR-1.27 MALE 2x20 Missing Pin 7 Polarized SMD VERT	Samtec Inc.	FTSH-110-01-F-DV-007-K
1	J503	CON HDR-2.54 Male 1x5 Gold 5.84MH TH VERT	FCI	68000-105HLF
1	J600	CON FLASH microSD 8+2P Push-Push SMD	Hirose Electric Co Ltd	DM3AT-SF-PEJM5
1	J700	CON JACK RJ45 10/100Base-T 2LED 7499010121A TH RA	Wurth Elektronik	7499010121A
3	J701, J702, J703	CON HDR-2.54 Male 1x3 AU 5.84MH TH VERT	Samtec Inc.	TSW-103-07-G-S
2	J704, J705	CON HDR-2.54 Male 1x3 Gold 5.84 MH TH R/A	Samtec	TSW-103-08-F-S-RA
2	J802, J803	CON HDR-2.54 Female 1x8 Tin TH VERT	Sullins	PPTC081LFBN-RC
1	L200	INDUCTOR 2.2 uH 5.5A 20% SMD XGL3520 AEC-Q200 L3.2W3.5H2	Coilcraft	XGL3520-222MEC
3	L201, L202, L900	INDUCTOR CHOKE COMMON MODE USB3.0 0.42K@1.9G Hz OHM SMD L1.52W0.76H1.07	Coilcraft	0603USB-142MLC
1	LABEL1	LABEL PCBA 18x6mm Datamatrix	ACT Logimark AS	505462
1	LABEL2	LABEL PCBA 6x6mm Info Text	ACT Logimark AS	505462
2	MH400, MH401	MECH HW STAND-OFF M2.5x2 mm 5.1mm Steel TH Solderable	Würth Elektronik	9774020151R
3	MOV200, MOV201, MOV900	RES VARISTOR 8.2V 30A V5.5MLA0603LNR SMD 0603	Littlefuse	V5.5MLA0603LNR
1	R200	RES TKF 1.2R 1% 1/10W SMD 0603	Panasonic	CRCW06031R20FNEA
2	R201, R203	RES TKF 2.2R 1% 1/8W SMD 0805 AEC-Q200	Vishay Dale	CRCW08052R20FKEA
33	R202, R207, R210, R211, R218, R219, R220, R222, R300, R302, R303, R311, R402, R500, R501, R502, R601, R602, R603, R604, R605, R606, R607, R608, R609, R610, R714, R715, R900, R901, R902, R921, R925	RES TF 10k 1% 1/10W SMD 0402 AEC-Q200	Vishay, Vishay Beyschlag	MCS0402MC1002FE000
13	R204, R306, R307, R315, R316, R400, R710, R711, R712, R716, R718, R800, R910	RES TKF 0R 1/10W SMD 0402	Panasonic Electronic Components	ERJ-2GE0R00X
1	R206	RES TKF 2.7k 1% 1/10W SMD 0402	Panasonic	ERJ-2RKF2701X
1	R208	RES TKF 19.6k 1% 1/10W SMD 0603	Yageo	RC0603FR-0719K6L
1	R209	RES TKF 475R 1% 1/10W SMD 0603	Panasonic Electronic Components	ERJ-3EKF4750V
2	R212, R215	RES TKF 56k 1% 1/10W SMD 0402 AEC-Q200	Panasonic Electronic Components	ERJ-2RKF5602X
2	R213, R217	RES TKF 5.1k 1% 1/10W SMD 0402	Panasonic Electronic Components	ERJ-2RKF5101X
3	R214, R611, R612	RES TKF 100k 1% 1/16W SMD 0402	KOA Speer	RK73H1ETTP1003F
1	R216	RES TKF 36k 1% 1/16W SMD 0402	ROHM	MCR01MRTF3602
3	R221, R912, R915	RES TKF 31.6k 1% 1/10W SMD 0402	Panasonic	ERJ-2RKF3162X
6	R223, R503, R504, R505, R914, R916	RES TKF 47k 5% 1/10W SMD 0402	Panasonic	ERJ-2GEJ473X
5	R301, R600, R700, R702, R703	RES TKF 1k 1% 1/10W SMD 0402	Panasonic	ERJ-2RKF1001X

© 2024 Microchip Technology Inc. and its subsidiaries

.....continued

Quantity	Designator	Description	Manufacturer	Manufacturer Part Number
1	R304	RES TKF 0R 1/8W SMD 0805	Panasonic	ERJ-6GEY0R00V
2	R305, R313	RES TKF 39R 1% 1/16W SMD 0402	Yageo	RC0402FR-0739RL
3	R308, R309, R401	RES TKF 0R 1/10W AEC-Q200 SMD 0603	Panasonic Electronic Components	ERJ-3GEY0R00V
5	R310, R314, R701, R706, R717	RES TKF 2k 1% 1/10W SMD 0402	Panasonic Electronic Components	ERJ-2RKF2001X
1	R312	RES TKF 270R 1% 1/10W SMD 0402	Panasonic Electronic Components	ERJ-2RKF2700X
11	R317, R318, R903, R907, R923, R924, R926, R928, R929, R931, R932	RES TKF 330R 1% 1/16W SMD 0402	Yageo	RC0402FR-07330RL
3	R506, R507, R508	RES TKF 90.9k 1% 1/10W SMD 0402	Panasonic Electronic Components	ERJ-2RKF9092X
5	R704, R705, R707, R708, R709	RES TKF 33R 1% 1/10W SMD 0402	Panasonic Electronic Components	ERJ-2RKF33R0X
1	R719	RES TKF 6.49k 1% 1/16W SMD 0402	Bourns Inc.	CR0402-FX-6491GLF
4	R720, R721, R722, R723	RES TKF 62R 1% 1/2W SMD 1210 AEC-Q200	Panasonic	ERJ-14NF62R0U
3	R904, R905, R906	RES TKF 100k 1% 1/10W SMD 0402	Panasonic	ERJ-2RKF1003X
3	R908, R909, R913	RES TKF 4.7k 1% 1/16W SMD 0402	Yageo	RC0402FR-074K7L
1	R911	RES TKF 100R 5% 1/10W SMD 0603	Vishay	CRCW0603100RJNEA
1	R917	RES TKF 5.62k 1% 1/16W SMD 0402	Vishay Dale	CRCW04025K62FKED
3	R918, R919, R920	RES TKF 3.3k 5% 1/10W SMD 0402	Panasonic - ECG	ERJ-2GEJ332X
3	R922, R927, R930	RES TKF 15k 1% 1/10W SMD 0402	Panasonic Electronic Components	ERJ-2RKF1502X
3	SW300, SW301, SW302	SWITCH TACT SPST 12V 50 mA PTS645SM43SMTR92 LFS SMD	C&K Components, Wurth Electronics Inc	PTS645SM43SMTR92 LFS, 430182043816
2	SW700, SW701	SWITCH SLIDE DPDT 6V 300 MA JS202011CQN TH	C&K Components	JS202011CQN
2	U203, U205	IC SWITCHER SPDT 2:1 NC7SB3157P6X 150 Ohm SC-70-6	onsemi	NC7SB3157P6X
1	U204	IC LOGIC SINGLE NAND GATE OD 1CH-2IN SN74LVC1G38DBVR SOT-23-5	Texas Instruments	SN74LVC1G38DBVR
Microchip Parts listed below				
1	Q900	MCHP ANALOG MOSFET N-CH TN2106 60V 280 mA 360mW 2.5R SOT23-3	Microchip Technology	TN2106K1-G
1	U200	MCHP ANALOG SWITCHER Buck 12V 6A MIC24052YJL-TR QFN-28	Microchip Technology	MIC24052YJL-TR
1	U201	MCHP ANALOG LDO 3.3V MCP1727T-3302E/MF DFN-8	Microchip	MCP1727T-3302E/MF
2	U202, U206	MCHP ANALOG POWER SWITCH 5.5V 500 mA MIC2005A-1YM5-TR SOT-23-5	Microchip Technology	MIC2005A-1YM5-TR
1	U300	MCHP 32-BIT ARM CORTEX-M33 MCU 2 MB Flash 512 KB SRAM	Microchip Technology	PIC32CK2051SG01144-I/4KB or PIC32CK2051GC01144-I/4KB
1	U301	MCHP IC VREF SERIES 0.1% SOT23-6	Microchip Technology	MCP1501T-20E/CHY
1	U600	MCHP MEMORY SERIAL EEPROM 2kB I2C EUI-64 AT24MAC402-MAHM DFN-8	Microchip Technology / Atmel	AT24MAC402-MAHM-T
1	U601	IC FLASH 32 MBIT SST26VF032BAT-104I/SM	Microchip Technology Inc	SST26VF032BAT-104I/SM
1	U700	MCHP INTERFACE ETHERNET KSZ8091RNACA-TR QFN-24	Microchip Technology	KSZ8091RNACA-TR

© 2024 Microchip Technology Inc. and its subsidiaries

.....continued				
Quantity	Designator	Description	Manufacturer	Manufacturer Part Number
2	U701, U702	MCHP INTERFACE CAN ATA6561-GBQW VDFN-8	Microchip Technology	ATA6561-GBQW
1	U900	MCHP MCU 32-BIT 300 MHz 2 MB 384 kB ATSAME70N21B-ANT LQFP-100	Microchip Technology	ATSAME70N21B-ANT
1	U901	MCHP MEMORY SERIAL EEPROM 256k I2C 24LC256T-I/MS MSOP-8	Microchip	24LC256T-I/MS
1	Y300	CRYSTAL 12MHz 10 pF 150 Ohms SMD L2.5W2H0.55	Microchip Technology	VXM8-9014-12M0000000
1	Y301	MCHP CRYSTAL 32.768 kHz 12.5 pF VMK3-9005-32K7680000 SMD L3.2W1.5H0.9	Microchip Technology	VMK3-9005-32K7680000
1	Y700	MCHP CLOCK OSCILLATOR SINGLE 25 MHz DSC1001DI5-025.0000 DFN-4	Microchip Technology	DSC1001DI5-025.0000
1	Y900	MCHP CLOCK OSCILLATOR SINGLE 12.00 MHz DSC6011JI2B-012.0000 SMD VLGA	Microchip Technology	DSC6011JI2B-012.0000
Mechanical Parts to be added in the package				
7	JS303, JS304, JS305, JS600, JS701, JS702, JS703	MECH HW JUMPER 2.54 mm 1x2 GOLD	Sullins Connector Solutions	QPC02SXGN-RC
4	MH1, MH2, MH3, MH4	MECH HW SINGLE PIN PAD 2.6MM TH	-	-
4	PAD1, PAD2, PAD3, PAD4	MECH HW RUBBER PAD CYLINDRICAL D7.9 H5.3 BLACK	3M	SJ61A11, SJ61A11 (x4)
PCB				
1	PCB1	Printed Circuit Board	-	**04-572-R2**

© 2024 Microchip Technology Inc. and its subsidiaries

4. Revision History

Revision B - February 2024

The following updates were performed in this revision:

- Updated Pin numbers/naming for the PORT columns of the tables in the following sections:
  - mikroBUS Socket
  - Xplained Pro Standard Extension Header
  - Dual CAN Interface
  - Graphics Connectors or GFX Card Interface
  - X32 Audio Connectivity
  - Arduino Uno R3 Interface
  - Button and LED

Revision A - March 2023

This is the initial released version of this document.

© 2024 Microchip Technology Inc. and its subsidiaries

Microchip Information

The Microchip Website

Microchip provides online support via our website at www.microchip.com/. This website is used to make files and information easily available to customers. Some of the content available includes:

- **Product Support** – Data sheets and errata, application notes and sample programs, design resources, user's guides and hardware support documents, latest software releases and archived software
- **General Technical Support** – Frequently Asked Questions (FAQs), technical support requests, online discussion groups, Microchip design partner program member listing
- **Business of Microchip** – Product selector and ordering guides, latest Microchip press releases, listing of seminars and events, listings of Microchip sales offices, distributors and factory representatives

Product Change Notification Service

Microchip's product change notification service helps keep customers current on Microchip products. Subscribers will receive email notification whenever there are changes, updates, revisions or errata related to a specified product family or development tool of interest.

To register, go to www.microchip.com/pcn and follow the registration instructions.

Customer Support

Users of Microchip products can receive assistance through several channels:

- Distributor or Representative
- Local Sales Office
- Embedded Solutions Engineer (ESE)
- Technical Support

Customers should contact their distributor, representative or ESE for support. Local sales offices are also available to help customers. A listing of sales offices and locations is included in this document.

Technical support is available through the website at: www.microchip.com/support

Microchip Devices Code Protection Feature

Note the following details of the code protection feature on Microchip products:

- Microchip products meet the specifications contained in their particular Microchip Data Sheet.
- Microchip believes that its family of products is secure when used in the intended manner, within operating specifications, and under normal conditions.
- Microchip values and aggressively protects its intellectual property rights. Attempts to breach the code protection features of Microchip product is strictly prohibited and may violate the Digital Millennium Copyright Act.
- Neither Microchip nor any other semiconductor manufacturer can guarantee the security of its code. Code protection does not mean that we are guaranteeing the product is "unbreakable". Code protection is constantly evolving. Microchip is committed to continuously improving the code protection features of our products.

Legal Notice

This publication and the information herein may be used only with Microchip products, including to design, test, and integrate Microchip products with your application. Use of this information in any other manner violates these terms. Information regarding device applications is provided only for your convenience and may be superseded by updates. It is your responsibility to ensure

© 2024 Microchip Technology Inc. and its subsidiaries

that your application meets with your specifications. Contact your local Microchip sales office for additional support or, obtain additional support at www.microchip.com/en-us/support/design-help/client-support-services.

THIS INFORMATION IS PROVIDED BY MICROCHIP "AS IS". MICROCHIP MAKES NO REPRESENTATIONS OR WARRANTIES OF ANY KIND WHETHER EXPRESS OR IMPLIED, WRITTEN OR ORAL, STATUTORY OR OTHERWISE, RELATED TO THE INFORMATION INCLUDING BUT NOT LIMITED TO ANY IMPLIED WARRANTIES OF NON-INFRINGEMENT, MERCHANTABILITY, AND FITNESS FOR A PARTICULAR PURPOSE, OR WARRANTIES RELATED TO ITS CONDITION, QUALITY, OR PERFORMANCE.

IN NO EVENT WILL MICROCHIP BE LIABLE FOR ANY INDIRECT, SPECIAL, PUNITIVE, INCIDENTAL, OR CONSEQUENTIAL LOSS, DAMAGE, COST, OR EXPENSE OF ANY KIND WHATSOEVER RELATED TO THE INFORMATION OR ITS USE, HOWEVER CAUSED, EVEN IF MICROCHIP HAS BEEN ADVISED OF THE POSSIBILITY OR THE DAMAGES ARE FORESEEABLE. TO THE FULLEST EXTENT ALLOWED BY LAW, MICROCHIP'S TOTAL LIABILITY ON ALL CLAIMS IN ANY WAY RELATED TO THE INFORMATION OR ITS USE WILL NOT EXCEED THE AMOUNT OF FEES, IF ANY, THAT YOU HAVE PAID DIRECTLY TO MICROCHIP FOR THE INFORMATION.

Use of Microchip devices in life support and/or safety applications is entirely at the buyer's risk, and the buyer agrees to defend, indemnify and hold harmless Microchip from any and all damages, claims, suits, or expenses resulting from such use. No licenses are conveyed, implicitly or otherwise, under any Microchip intellectual property rights unless otherwise stated.

Trademarks

The Microchip name and logo, the Microchip logo, Adaptec, AVR, AVR logo, AVR Freaks, BesTime, BitCloud, CryptoMemory, CryptoRF, dsPIC, flexPWR, HELDO, IGLOO, JukeBlox, KeeLoq, Kleer, LANCheck, LinkMD, maXStylus, maXTouch, MediaLB, megaAVR, Microsemi, Microsemi logo, MOST, MOST logo, MPLAB, OptoLyzer, PIC, picoPower, PICSTART, PIC32 logo, PolarFire, Prochip Designer, QTouch, SAM-BA, SenGenuity, SpyNIC, SST, SST Logo, SuperFlash, Symmetricom, SyncServer, Tachyon, TimeSource, tinyAVR, UNI/O, Vectron, and XMEGA are registered trademarks of Microchip Technology Incorporated in the U.S.A. and other countries.

AgileSwitch, ClockWorks, The Embedded Control Solutions Company, EtherSynch, Flashtec, Hyper Speed Control, HyperLight Load, Libero, motorBench, mTouch, Powermite 3, Precision Edge, ProASIC, ProASIC Plus, ProASIC Plus logo, Quiet-Wire, SmartFusion, SyncWorld, TimeCesium, TimeHub, TimePictra, TimeProvider, and ZL are registered trademarks of Microchip Technology Incorporated in the U.S.A.

Adjacent Key Suppression, AKS, Analog-for-the-Digital Age, Any Capacitor, AnyIn, AnyOut, Augmented Switching, BlueSky, BodyCom, Clockstudio, CodeGuard, CryptoAuthentication, CryptoAutomotive, CryptoCompanion, CryptoController, dsPICDEM, dsPICDEM.net, Dynamic Average Matching, DAM, ECAN, Espresso T1S, EtherGREEN, EyeOpen, GridTime, IdealBridge, IGaT, In-Circuit Serial Programming, ICSP, INICnet, Intelligent Paralleling, IntelliMOS, Inter-Chip Connectivity, JitterBlocker, Knob-on-Display, MarginLink, maxCrypto, maxView, memBrain, Mindi, MiWi, MPASM, MPF, MPLAB Certified logo, MPLIB, MPLINK, mSiC, MultiTRAK, NetDetach, Omniscient Code Generation, PICDEM, PICDEM.net, PICkit, PICtail, Power MOS IV, Power MOS 7, PowerSmart, PureSilicon, QMatrix, REAL ICE, Ripple Blocker, RTAX, RTG4, SAM-ICE, Serial Quad I/O, simpleMAP, SimpliPHY, SmartBuffer, SmartHLS, SMART-I.S., storClad, SQI, SuperSwitcher, SuperSwitcher II, Switchtec, SynchroPHY, Total Endurance, Trusted Time, TSHARC, Turing, USBCheck, VariSense, VectorBlox, VeriPHY, ViewSpan, WiperLock, XpressConnect, and ZENA are trademarks of Microchip Technology Incorporated in the U.S.A. and other countries.

SQTP is a service mark of Microchip Technology Incorporated in the U.S.A.

The Adaptec logo, Frequency on Demand, Silicon Storage Technology, and Symmcom are registered trademarks of Microchip Technology Inc. in other countries.

GestIC is a registered trademark of Microchip Technology Germany II GmbH & Co. KG, a subsidiary of Microchip Technology Inc., in other countries.

© 2024 Microchip Technology Inc. and its subsidiaries

All other trademarks mentioned herein are property of their respective companies.

© 2024, Microchip Technology Incorporated and its subsidiaries. All Rights Reserved.

ISBN: 978-1-6683-3947-3

Quality Management System

For information regarding Microchip's Quality Management Systems, please visit www.microchip.com/quality.

© 2024 Microchip Technology Inc. and its subsidiaries

Worldwide Sales and Service

AMERICAS	ASIA/PACIFIC	ASIA/PACIFIC	EUROPE
Corporate Office	**Australia - Sydney**	**India - Bangalore**	**Austria - Wels**
2355 West Chandler Blvd.	Tel: 61-2-9868-6733	Tel: 91-80-3090-4444	Tel: 43-7242-2244-39
Chandler, AZ 85224-6199	**China - Beijing**	**India - New Delhi**	Fax: 43-7242-2244-393
Tel: 480-792-7200	Tel: 86-10-8569-7000	Tel: 91-11-4160-8631	**Denmark - Copenhagen**
Fax: 480-792-7277	**China - Chengdu**	**India - Pune**	Tel: 45-4485-5910
Technical Support:	Tel: 86-28-8665-5511	Tel: 91-20-4121-0141	Fax: 45-4485-2829
www.microchip.com/support	**China - Chongqing**	**Japan - Osaka**	**Finland - Espoo**
Web Address:	Tel: 86-23-8980-9588	Tel: 81-6-6152-7160	Tel: 358-9-4520-820
www.microchip.com	**China - Dongguan**	**Japan - Tokyo**	**France - Paris**
Atlanta	Tel: 86-769-8702-9880	Tel: 81-3-6880- 3770	Tel: 33-1-69-53-63-20
Duluth, GA	**China - Guangzhou**	**Korea - Daegu**	Fax: 33-1-69-30-90-79
Tel: 678-957-9614	Tel: 86-20-8755-8029	Tel: 82-53-744-4301	**Germany - Garching**
Fax: 678-957-1455	**China - Hangzhou**	**Korea - Seoul**	Tel: 49-8931-9700
Austin, TX	Tel: 86-571-8792-8115	Tel: 82-2-554-7200	**Germany - Haan**
Tel: 512-257-3370	**China - Hong Kong SAR**	**Malaysia - Kuala Lumpur**	Tel: 49-2129-3766400
Boston	Tel: 852-2943-5100	Tel: 60-3-7651-7906	**Germany - Heilbronn**
Westborough, MA	**China - Nanjing**	**Malaysia - Penang**	Tel: 49-7131-72400
Tel: 774-760-0087	Tel: 86-25-8473-2460	Tel: 60-4-227-8870	**Germany - Karlsruhe**
Fax: 774-760-0088	**China - Qingdao**	**Philippines - Manila**	Tel: 49-721-625370
Chicago	Tel: 86-532-8502-7355	Tel: 63-2-634-9065	**Germany - Munich**
Itasca, IL	**China - Shanghai**	**Singapore**	Tel: 49-89-627-144-0
Tel: 630-285-0071	Tel: 86-21-3326-8000	Tel: 65-6334-8870	Fax: 49-89-627-144-44
Fax: 630-285-0075	**China - Shenyang**	**Taiwan - Hsin Chu**	**Germany - Rosenheim**
Dallas	Tel: 86-24-2334-2829	Tel: 886-3-577-8366	Tel: 49-8031-354-560
Addison, TX	**China - Shenzhen**	**Taiwan - Kaohsiung**	**Israel - Ra'anana**
Tel: 972-818-7423	Tel: 86-755-8864-2200	Tel: 886-7-213-7830	Tel: 972-9-744-7705
Fax: 972-818-2924	**China - Suzhou**	**Taiwan - Taipei**	**Italy - Milan**
Detroit	Tel: 86-186-6233-1526	Tel: 886-2-2508-8600	Tel: 39-0331-742611
Novi, MI	**China - Wuhan**	**Thailand - Bangkok**	Fax: 39-0331-466781
Tel: 248-848-4000	Tel: 86-27-5980-5300	Tel: 66-2-694-1351	**Italy - Padova**
Houston, TX	**China - Xian**	**Vietnam - Ho Chi Minh**	Tel: 39-049-7625286
Tel: 281-894-5983	Tel: 86-29-8833-7252	Tel: 84-28-5448-2100	**Netherlands - Drunen**
Indianapolis	**China - Xiamen**		Tel: 31-416-690399
Noblesville, IN	Tel: 86-592-2388138		Fax: 31-416-690340
Tel: 317-773-8323	**China - Zhuhai**		**Norway - Trondheim**
Fax: 317-773-5453	Tel: 86-756-3210040		Tel: 47-72884388
Tel: 317-536-2380			**Poland - Warsaw**
Los Angeles			Tel: 48-22-3325737
Mission Viejo, CA			**Romania - Bucharest**
Tel: 949-462-9523			Tel: 40-21-407-87-50
Fax: 949-462-9608			**Spain - Madrid**
Tel: 951-273-7800			Tel: 34-91-708-08-90
Raleigh, NC			Fax: 34-91-708-08-91
Tel: 919-844-7510			**Sweden - Gothenberg**
New York, NY			Tel: 46-31-704-60-40
Tel: 631-435-6000			**Sweden - Stockholm**
San Jose, CA			Tel: 46-8-5090-4654
Tel: 408-735-9110			**UK - Wokingham**
Tel: 408-436-4270			Tel: 44-118-921-5800
Canada - Toronto			Fax: 44-118-921-5820
Tel: 905-695-1980			
Fax: 905-695-2078			

© 2024 Microchip Technology Inc. and its subsidiaries