

EVB-LAN8770-RMII Evaluation Board User's Guide

© 2020 Microchip Technology Inc.

Note the following details of the code protection feature on Microchip devices:

- Microchip products meet the specification contained in their particular Microchip Data Sheet.
- Microchip believes that its family of products is one of the most secure families of its kind on the market today, when used in the intended manner and under normal conditions.
- There are dishonest and possibly illegal methods used to breach the code protection feature. All of these methods, to our knowledge, require using the Microchip products in a manner outside the operating specifications contained in Microchip's Data Sheets. Most likely, the person doing so is engaged in theft of intellectual property.
- Microchip is willing to work with the customer who is concerned about the integrity of their code.
- Neither Microchip nor any other semiconductor manufacturer can guarantee the security of their code. Code protection does not mean that we are guaranteeing the product as "unbreakable."

Code protection is constantly evolving. We at Microchip are committed to continuously improving the code protection features of our products. Attempts to break Microchip's code protection feature may be a violation of the Digital Millennium Copyright Act. If such acts allow unauthorized access to your software or other copyrighted work, you may have a right to sue for relief under that Act.

Information contained in this publication regarding device applications and the like is provided only for your convenience and may be superseded by updates. It is your responsibility to ensure that your application meets with your specifications. MICROCHIP MAKES NO REPRESENTATIONS OR WARRANTIES OF ANY KIND WHETHER EXPRESS OR IMPLIED, WRITTEN OR ORAL, STATUTORY OR OTHERWISE, RELATED TO THE INFORMATION, INCLUDING BUT NOT LIMITED TO ITS CONDITION, QUALITY, PERFORMANCE, MERCHANTABILITY OR FITNESS FOR PURPOSE**.** Microchip disclaims all liability arising from this information and its use. Use of Microchip devices in life support and/or safety applications is entirely at the buyer's risk, and the buyer agrees to defend, indemnify and hold harmless Microchip from any and all damages, claims, suits, or expenses resulting from such use. No licenses are conveyed, implicitly or otherwise, under any Microchip intellectual property rights unless otherwise stated.

Trademarks

The Microchip name and logo, the Microchip logo, Adaptec, AnyRate, AVR, AVR logo, AVR Freaks, BesTime, BitCloud, chipKIT, chipKIT logo, CryptoMemory, CryptoRF, dsPIC, FlashFlex, flexPWR, HELDO, IGLOO, JukeBlox, KeeLoq, Kleer, LANCheck, LinkMD, maXStylus, maXTouch, MediaLB, megaAVR, Microsemi, Microsemi logo, MOST, MOST logo, MPLAB, OptoLyzer, PackeTime, PIC, picoPower, PICSTART, PIC32 logo, PolarFire, Prochip Designer, QTouch, SAM-BA, SenGenuity, SpyNIC, SST, SST Logo, SuperFlash, Symmetricom, SyncServer, Tachyon, TempTrackr, TimeSource, tinyAVR, UNI/O, Vectron, and XMEGA are registered trademarks of Microchip Technology Incorporated in the U.S.A. and other countries.

APT, ClockWorks, The Embedded Control Solutions Company, EtherSynch, FlashTec, Hyper Speed Control, HyperLight Load, IntelliMOS, Libero, motorBench, mTouch, Powermite 3, Precision Edge, ProASIC, ProASIC Plus, ProASIC Plus logo, Quiet-Wire, SmartFusion, SyncWorld, Temux, TimeCesium, TimeHub, TimePictra, TimeProvider, Vite, WinPath, and ZL are registered trademarks of Microchip Technology Incorporated in the U.S.A.

Adjacent Key Suppression, AKS, Analog-for-the-Digital Age, Any Capacitor, AnyIn, AnyOut, BlueSky, BodyCom, CodeGuard, CryptoAuthentication, CryptoAutomotive, CryptoCompanion, CryptoController, dsPICDEM, dsPICDEM.net, Dynamic Average Matching, DAM, ECAN, EtherGREEN, In-Circuit Serial Programming, ICSP, INICnet, Inter-Chip Connectivity, JitterBlocker, KleerNet, KleerNet logo, memBrain, Mindi, MiWi, MPASM, MPF, MPLAB Certified logo, MPLIB, MPLINK, MultiTRAK, NetDetach, Omniscient Code Generation, PICDEM, PICDEM.net, PICkit, PICtail, PowerSmart, PureSilicon, QMatrix, REAL ICE, Ripple Blocker, SAM-ICE, Serial Quad I/O, SMART-I.S., SQI, SuperSwitcher, SuperSwitcher II, Total Endurance, TSHARC, USBCheck, VariSense, ViewSpan, WiperLock, Wireless DNA, and ZENA are trademarks of Microchip Technology Incorporated in the U.S.A. and other countries.

SQTP is a service mark of Microchip Technology Incorporated in the U.S.A.

The Adaptec logo, Frequency on Demand, Silicon Storage Technology, and Symmcom are registered trademarks of Microchip Technology Inc. in other countries.

GestIC is a registered trademark of Microchip Technology Germany II GmbH & Co. KG, a subsidiary of Microchip Technology Inc., in other countries.

All other trademarks mentioned herein are property of their respective companies.

© 2020, Microchip Technology Incorporated, All Rights Reserved.

ISBN: 978-1-5224-5938-5

For information regarding Microchip's Quality Management Systems, please visit www.microchip.com/quality.

Table of Contents

Preface **5**
Introduction 5
Document Layout 5
Conventions Used in this Guide 6
Warranty Registration 7
The Microchip Website 7
Development Systems Customer Change Notification Service 7
Customer Support 8
Document Revision History 8

Chapter 1. Overview
1.1 Introduction 9
1.2 Features 9
1.3 Block Diagram 9
1.4 References 10
1.5 Acronyms and Definitions 10

Chapter 2. Getting Started
2.1 Introduction 11
2.2 Quick Start 11

Chapter 3. Hardware Configuration
3.1 Hardware Configuration Options 13
3.1.1 Power Source 13
3.1.2 Clock 13
3.1.3 Board Features and Configuration 14
3.1.4 Using the EVB-LAN8770-RMII™ Evaluation Board 14

Appendix A. Schematics
A.1 Introduction 15

Appendix B. Bill of Materials
B.1 Introduction 17

Appendix C. Silk Screens
C.1 Introduction 19

Worldwide Sales and Service **22**

© 2020 Microchip Technology Inc.

NOTES:

© 2020 Microchip Technology Inc.

Preface

NOTICE TO CUSTOMERS

All documentation becomes dated, and this manual is no exception. Microchip tools and documentation are constantly evolving to meet customer needs, so some actual dialogs and/or tool descriptions may differ from those in this document. Please refer to our web site (www.microchip.com) to obtain the latest documentation available.

Documents are identified with a "DS" number. This number is located on the bottom of each page, in front of the page number. The numbering convention for the DS number is "DSXXXXXA", where "XXXXX" is the document number and "A" is the revision level of the document.

For the most up-to-date information on development tools, see the MPLAB® IDE online help. Select the Help menu, and then Topics to open a list of available online help files.

INTRODUCTION

This chapter contains general information that will be useful to know before using theEVB-LAN8770-RMII™ Evaluation Board. Items discussed in this chapter include:

- Document Layout
- Conventions Used in this Guide
- Warranty Registration
- The Microchip Website
- Development Systems Customer Change Notification Service
- Customer Support
- Document Revision History

DOCUMENT LAYOUT

This document describes how to use the EVB-LAN8770-RMII Evaluation Board as a development tool for the LAN8770, 100BASE-T1 Ethernet Transceiver. The manual layout is as follows:

- **Chapter 1. "Overview"** – This chapter shows a brief description of the EVB-LAN8770-RMII Evaluation Board.
- **Chapter 2. "Getting Started"** – This chapter provides information about the setup and operation of the EVB-LAN8770-RMII Evaluation Board.
- **Chapter 3. "Hardware Configuration"** – This chapter provides information about the hardware configuration of the EVB-LAN8770-RMII Evaluation Board.
- **Appendix A. "Schematics"** – This appendix shows the EVB-LAN8770-RMII Evaluation Board schematics.
- **Appendix B. "Bill of Materials"** – This appendix includes the EVB-LAN8770-RMII Evaluation Board Bill of Materials.
- **Appendix C. "Silk Screens"** – This appendix shows the EVB-LAN8770-RMII Evaluation Board silk screens.

© 2020 Microchip Technology Inc.

CONVENTIONS USED IN THIS GUIDE

This manual uses the following documentation conventions:

DOCUMENTATION CONVENTIONS

Description	Represents	Examples
Arial font:		
Italic characters	Referenced books	*MPLAB® IDE User's Guide*
	Emphasized text	...is the *only* compiler...
Initial caps	A window	the Output window
	A dialog	the Settings dialog
	A menu selection	select Enable Programmer
Quotes	A field name in a window or dialog	"Save project before build"
Underlined, italic text with right angle bracket	A menu path	*File>Save*
Bold characters	A dialog button	Click **OK**
	A tab	Click the **Power** tab
N'Rnnnn	A number in verilog format, where N is the total number of digits, R is the radix and n is a digit.	4'b0010, 2'hF1
Text in angle brackets < >	A key on the keyboard	Press <Enter>, <F1>
Courier New font:		
Plain Courier New	Sample source code	`%fghkpg"UVCTV`
	Filenames	`cwvqgzge0dcv`
	File paths	`e<^oee3:^j`
	Keywords	`acuo."agpfcuo."uvcvke`
	Command-line options	`-Qrc-."-Qrc/`
	Bit values	`2."3`
	Constants	`2zHH."ÈCÍ`
Italic Courier New	A variable argument	*`hkng`*`0q`, where *`hkng`* can be any valid filename
Square brackets [ ]	Optional arguments	`oee3:"]qrvkqpu_"`*`hkng`*`"]qrvkqpu_`
Curly brackets and pipe character: { | }	Choice of mutually exclusive arguments; an OR selection	`gttqtngxgn"}2~3¡`
Ellipses...	Replaces repeated text	`var_name [, var_name...]`
	Represents code supplied by user	`void main (void) { ... }`

© 2020 Microchip Technology Inc.

WARRANTY REGISTRATION

Please complete the enclosed Warranty Registration Card and mail it promptly. Sending the Warranty Registration Card entitles users to receive new product updates. Interim software releases are available at the Microchip website.

THE MICROCHIP WEBSITE

Microchip provides online support via our website at www.microchip.com. This website is used as a means to make files and information easily available to customers. Accessible by using your favorite Internet browser, the website contains the following information:

- **Product Support** – Data sheets and errata, application notes and sample programs, design resources, user's guides and hardware support documents, latest software releases and archived software
- **General Technical Support** – Frequently Asked Questions (FAQs), technical support requests, online discussion groups, Microchip consultant program member listing
- **Business of Microchip** – Product selector and ordering guides, latest Microchip press releases, listing of seminars and events, listings of Microchip sales offices, distributors and factory representatives

DEVELOPMENT SYSTEMS CUSTOMER CHANGE NOTIFICATION SERVICE

Microchip's customer notification service helps keep customers current on Microchip products. Subscribers will receive e-mail notification whenever there are changes, updates, revisions, or errata related to a specified product family or development tool of interest.

To register, access the Microchip web site at www.microchip.com, click on Customer Change Notification and follow the registration instructions.

The Development Systems product group categories are:

- **Compilers** – The latest information on Microchip C compilers, assemblers, linkers and other language tools. These include all MPLABCC compilers; all MPLAB assemblers (including MPASM™ assembler); all MPLAB linkers (including MPLINK™ object linker); and all MPLAB librarians (including MPLIB™ object librarian).
- **Emulators** – The latest information on Microchip in-circuit emulators.This includes the MPLAB® REAL ICE™ and MPLAB ICE 2000 in-circuit emulators.
- **In-Circuit Debuggers** – The latest information on the Microchip in-circuit debuggers. This includes MPLAB ICD 3 in-circuit debuggers and PICkit™ 3 debug express.
- **MPLAB IDE** – The latest information on Microchip MPLAB IDE, the Windows® Integrated Development Environment for development systems tools. This list is focused on the MPLAB IDE, MPLAB IDE Project Manager, MPLAB Editor and MPLAB SIM simulator, as well as general editing and debugging features.
- **Programmers** – The latest information on Microchip programmers. These include production programmers such as MPLAB REAL ICE in-circuit emulator, MPLAB ICD 3 in-circuit debugger and MPLAB PM3 device programmers. Also included are non-production development programmers such as PICSTART® Plus and PICkit™ 2 and 3.

CUSTOMER SUPPORT

Users of Microchip products can receive assistance through several channels:

- Distributor or Representative
- Local Sales Office
- Field Application Engineer (FAE)
- Technical Support

Customers should contact their distributor, representative or field application engineer (FAE) for support. Local sales offices are also available to help customers. A listing of sales offices and locations is included in the back of this document.

Technical support is available through the web site at:
http://www.microchip.com/support

DOCUMENT REVISION HISTORY

Revisions	Section/Figure/Entry	Correction
DS50002978A (04-17-2020)	Initial release	

© 2020 Microchip Technology Inc.

Chapter 1. Overview

1.1 INTRODUCTION

The EVB-LAN8770-RMII™ Evaluation Board is a plug-in card that interfaces directly with a mating Microchip host processor or controller board, such as the SAMA5D3 Ethernet Development System (EDS) Board. It features the LAN8770, a highly integrated networking device that incorporates a 100BASE-T1 physical layer transceiver (PHY). The board's PHY port is connected to a 100BASE-T1 Screw Terminal connector, and the PHY's RMII connections are brought out to a multi-pin connector.

Together, the EVB-LAN8770-RMII™ Evaluation Board and the SAMA5D3 EDS Board provide a highly flexible platform for the evaluation of basic PHY features via static Control Status Registers (CSR).

The scope of this document describes the EVB-LAN8770-RMII Evaluation Board Evaluation Board setup and its user interface features. A simplified block diagram of the board is shown in Figure 1-1.

1.2 FEATURES

Below are the features of the EVB-LAN8770-RMII™ Evaluation Board:

- LAN8770R 100BASE-T1 PHY
- TC10 Wake/Sleep capability
- Compact EVB design to evaluate 100BASE-T1
- Xplained Ultra (latest) RMII connector to interface with Ethernet MCU board including following board-to-board signals:
  - RMII mode: 50 MHz reference clock from MCU to PHY
  - MDC/MDIO
  - PHY Reset
  - PHY Interrupt
  - WAKE_IN: Connect to GPIO on MCU
  - ENABLE: Connect to GPIO on MCU
- 3.3V VDD supply and TC10 V battery supply
- 2-pin screw terminal connector for 100BASE-T1 physical interface
- Single LED indicator for speed/link/activity status

1.3 BLOCK DIAGRAM

Figure 1-1 illustrates the simplified block diagram of the EVB-LAN8770-RMII™ Evaluation Board:

FIGURE 1-1: BLOCK DIAGRAM

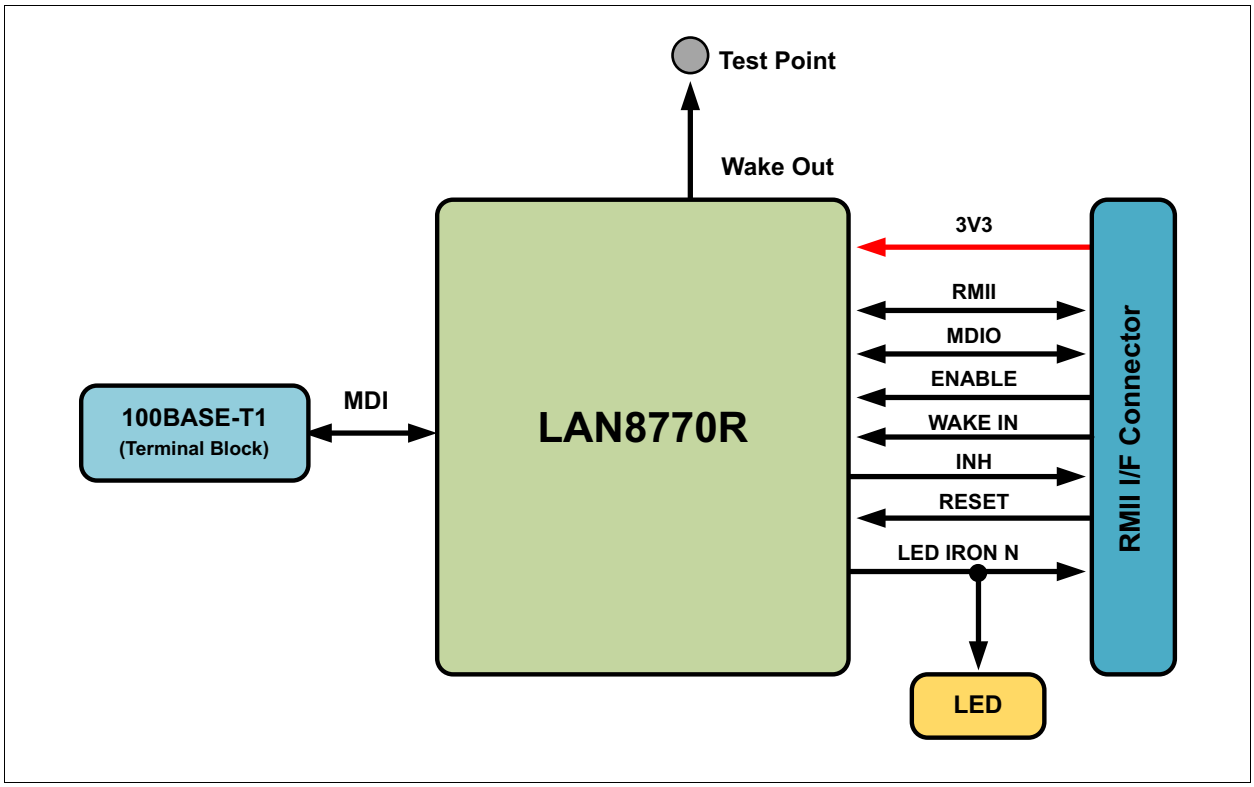

1.4 REFERENCES

Concepts and materials available in the following documents may be helpful when reading this document. Visit www.microchip.com for the latest documentation:

- *SAMA5D3 Ethernet Development System Board User's Guide*
- *MIC33153 4 MHz 1.2A Internal Inductor PWM Buck Regulator with HyperLight Load® and Power Good Data Sheet*
- *MIC5207 180 mA Low-Noise LDO Regulator Data Sheet*

1.5 ACRONYMS AND DEFINITIONS

Table 1-1 shows the list of terms used in this document and their definitions:

TABLE 1-1: ACRONYMS AND DEFINITIONS

Acronym	Definition
EDS	Ethernet Development System
PHY	Physical layer transceiver
MDI	Media-Dependent Interface
MDIO	Management Data Input/Output
MDC	Management Data Clock
RMII™	Reduced Media-Independent Interface

© 2020 Microchip Technology Inc.

Chapter 2. Getting Started

2.1 INTRODUCTION

The EVB-LAN8770-RMII™ Evaluation Board is designed as a plug-in card to interface directly with a mating Microchip host processor or controller board, such as the SAMA5D3-EDS Board. The SAMA5D3-EDS Board supplies full power as well as provides full register access and configuration via MDIO/MDC bus management.

2.2 QUICK START

The following are the jumpers needed for the SAMA5D3-EDS to operate with the EVB-LAN8770-RMII™ Evaluation Board:

- J2, 3.3V setting
- J3
- J4, sel1 to PU
- J7
- J13
- J17
- J20

Connect the EVB-LAN8770-RMII Evaluation Board to the SAMA5D3-EDS J6 Header. Connect 12V Supply to the SAMA5D3-EDS, and the initial setup is complete.

The following are the jumpers needed for the EVB-LAN7800 RMII Evaluation Board:

- J5 closed for master, J5 open for slave
- J6

© 2020 Microchip Technology Inc.

NOTES:

© 2020 Microchip Technology Inc.

Chapter 3. Hardware Configuration

3.1 HARDWARE CONFIGURATION OPTIONS

Figure 3-1 shows the top view of the EVB-LAN8770-RMII™ Evaluation Board.

FIGURE 3-1: EVB-LAN8770-RMII™ EVALUATION BOARD TOP VIEW WITH CALLOUTS

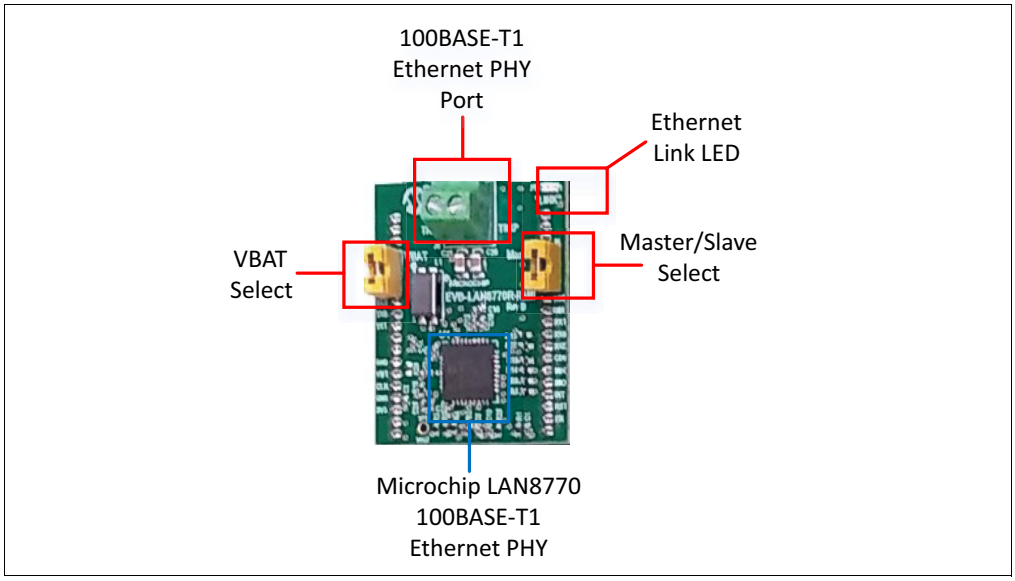

3.1.1 Power Source

The EVB-LAN8770-RMII Evaluation Board is completely bus-powered from its mating Microchip host processor or control board. Refer to Figure 3-1 and the board schematics in Figure A-1.

3.1.2 Clock

The EVB-LAN8770-RMII Evaluation board utilizes a 25 MHz crystal to generate the input reference clock for the LAN8770 device. See Figure 3-1 and the board schematics in Figure A-1 for details.

3.1.3 Board Features and Configuration

Figure 3-1 displays the top view of the EVB-LAN8770-RMII Evaluation Board with key features, jumpers, power and headers which are highlighted in red. The Microchip components are highlighted in blue.

3.1.3.1 VBAT

VBAT can be sourced from an external processor board or SoC (System on a Chip) with 3.3V supply by populating a jumper on VBAT Select (J6). If no jumper is populated, an external supply can source the VBAT voltage. If Wake/Sleep control is not needed, J6 should be populated with a jumper.

3.1.3.2 MASTER/SLAVE

The master/slave select (J5) can configure the LAN8770 to be either master or slave in communication with a link partner of opposite master/slave configuration (as per 100BASE-T1 specifications). For master, J5 is populated with a jumper. For slave, J5 is left open.

3.1.4 Using the EVB-LAN8770-RMII™ Evaluation Board

The EVB-LAN8770-RMII™ Evaluation Board directly plugs into a mating Microchip host controller or processor board, such as the SAMA5D3 EDS which delivers full power and provides full register access and configuration via MDIO/MDC bus management. Both the EVB-LAN8770-RMII Evaluation Board and the SAMA5D3 EDS board enable 100 Mbps Ethernet traffic through RMII and the PHY port of the LAN8770 device, with the RMII port connecting to the SAMA5D3 processor and the PHY port connecting via 2-wire, single-pair cable to external 100BASE-T1 Ethernet devices. All LAN8770 registers are accessible via MDIO/MDC bus management from the SAMA5D3 EDS Board, enabling full evaluation and firmware development for all LAN8770 features. Refer to the SAMA5D3 EDS Board documentation on its usage. Figure 3-2 shows the EVB-LAN8770-RMII Evaluation Board connected to the SAMA5D3 EDS Board.

FIGURE 3-2: EVB-LAN8770-RMII EVALUATION BOARD WITH SAMA5D3 EDS BOARD (TOP VIEW)

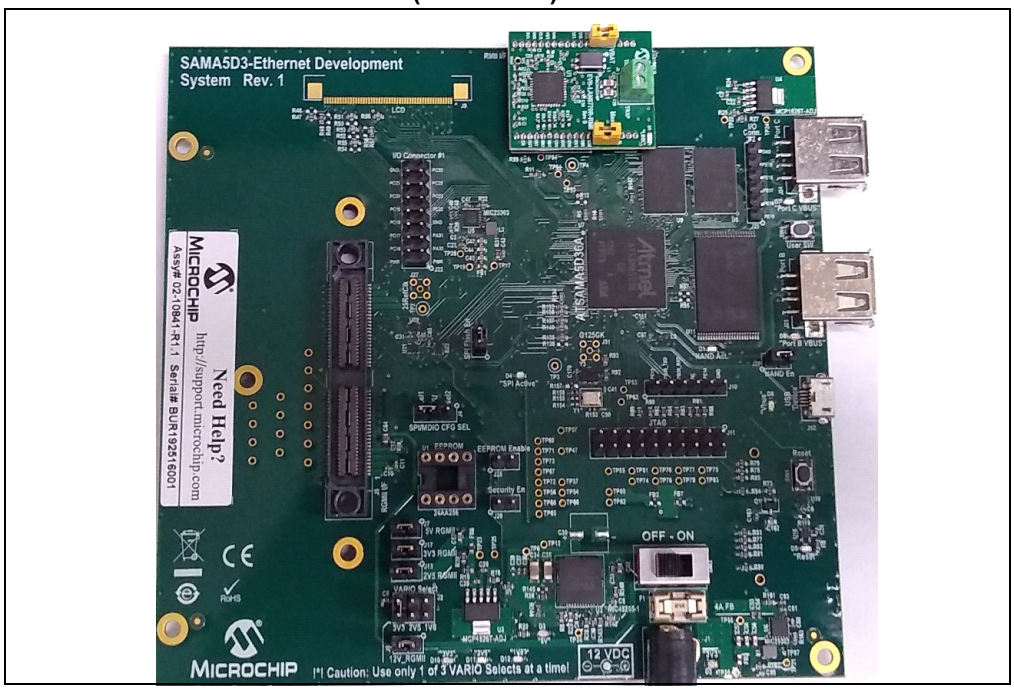

© 2020 Microchip Technology Inc.

Appendix A. Schematics

A.1 INTRODUCTION

This appendix shows the EVB-LAN8770-RMII™ Evaluation Board schematic.

© 2020 Microchip Technology Inc.

FIGURE A-1: EVB-LAN8770-RMII™ EVALUATION BOARD SCHEMATIC

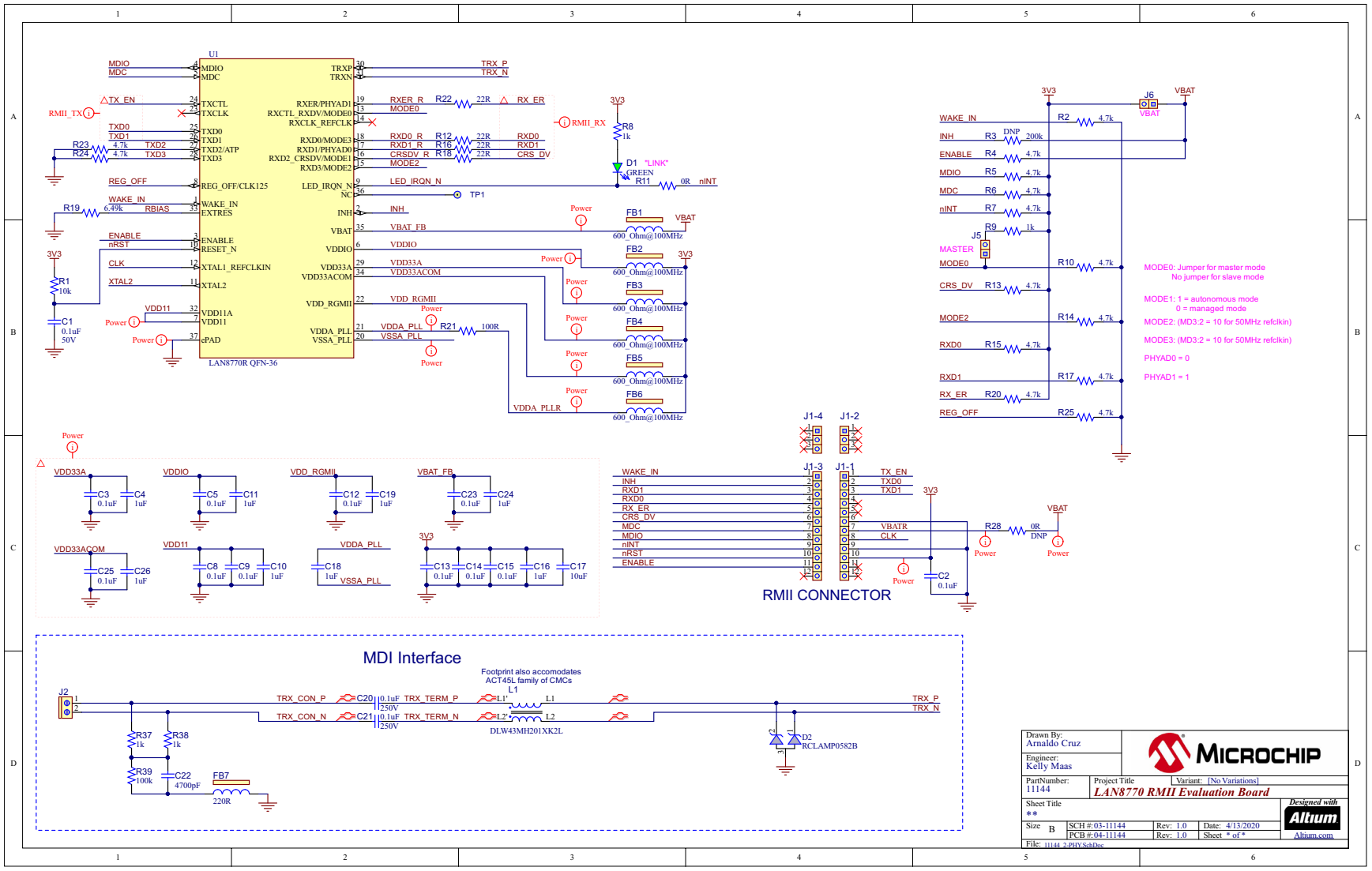

Appendix B. Bill of Materials

B.1 INTRODUCTION

This appendix contains the EVB-LAN8770-RMII™ Evaluation Board Bill of Materials (BOM).

TABLE B-1: EVB-LAN8770-RMII™ BILL OF MATERIALS

Item	Quantity	Designator	Description	Populated	Manufacturer	Manufacturer Part Number
1	12	C1, C2, C3, C5, C8, C9, C12, C13, C14, C15, C23, C25	CAP CER 0.1 µF 50V 10% X7R SMD 0402	Yes	TDK Corporation	C1005X7R1H104K050BB
2	8	C4, C10, C11, C16, C18, C19, C24, C26	CAP CER 1 µF 35V 10% X5R SMD 0402	Yes	Murata Electronics North America	GRM155R6YA105KE11D
3	1	C17	CAP CER 470 pF 25V 5% NP0 SMD 0603	Yes	Murata Electronics North America	GRM188R61E106MA73D
4	2	C20, C21	CAP CER 0.1 µF 250V 10% X7T SMD 0805	Yes	TDK Corporation	C2012X7T2E104K125AA
5	1	C22	CAP CER 4700 pF 50V 10% X7R SMD 0402	Yes	Murata Electronics North America	GRM155R71H472KA01J
6	1	D1	DIO LED GREEN 2V 30 mA 35 mcd Clear SMD 0603	Yes	Lite-On Inc	LTST-C191KGKT
7	1	D2	DIO TVS ARRAY RCLAMP0582BQTCT 5V 300W SMD SC-75-3	Yes	Semtech Corporation	RCLAMP0582BQTCT
8	6	FB1, FB2, FB3, FB4, FB5, FB6	FERRITE 600R@100 MHz DCR 0.34R 500 mA SMD 0402	Yes	Murata Electronics North America	BLM15AX601SZ1D
9	1	FB7	FERRITE 220R@100 MHz 2A SMD 0603	Yes	Murata Electronics North America	MMBD914LT1G
10	2	J1-1, J1-3	CON HDR-1.27 Male 1X12 GOLD 3.0 MH TH VERT	Yes	Sullins Connector Solutions	GRPB121VWVN-RC
11	2	J1-2, J1-4	CON HDR-1.27 Male 1X3 GOLD 3.0 MH TH VERT	Yes	Sullins Connector Solutions	GRPB031VWVN-RC
12	1	J2	CON TERMINAL 2.54 mm 1x2 Female 20-30AWG 6A TH R/A	Yes	Phoenix Contact	1725656
13	2	J5, J6	CON HDR-2 Male 1X2 Gold TH VERT	Yes	Hirose	A3C-2P-2DSA
14	1	L1	CM CHOKE 200 µH 100 kHz 4.5R 20% SMD DLW43	Yes	Murata Electronics	DLW43MH201XK2L
15	1	R1	RES TFK 10k 1% 1/10W SMD 0402	Yes	Panasonic	P10.0KLCT-ND
16	14	R2, R4, R5, R6, R7, R10, R13, R14, R!5, R17, R20, R23, R24, R25	RES TFK 4.7k 1% 1/10W 0402	Yes	KOA Speer	RK73H1ETTP4701F
17	4	R8, R9, R37, R38	RES TKF 1K 1% 1/10W SMD 0402	Yes	Panasonic	ERJ-2RKF1001X
18	1	R11	RES TKF 0R 1% 1/10W SMD 0402	Yes	Panasonic	ERJ-2GE0R00X
19	4	R12, R16, R18, R22	RES TKF 22R 1% 1/20W SMD 0402	Yes	Panasonic Electronic Components	ERJ-2RKF22R0X
20	1	R19	RES TKF 6.49k 0.1% 1/16W SMD 0402	Yes	Panasonic Electronic Components	ERA-2ARB6491X
21	1	R21	RES TKF 100R 1% 1/10W SMD 0402	Yes	Panasonic Electronic Components	ERJ-2RRKF1000X
22	1	R39	RES TKF 100k 1% 1/10W SMD 0402	Yes	Panasonic	ERJ-2RRKF1003X
23	1	U1	MCHP INTERFACE T1 ETHERNET LAN8770R QFN-36	Yes	Microchip Technology Inc.	LAN8770R
24	1	R3	RES TKF 200k 1% 1/10W SMD 0402	DNP	Panasonic	ERJ-2RKF2003X
25	1	R28	RES TKF 0R SMD 0402	DNP	Panasonic	ERJ-2GE0R00X

© 2020 Microchip Technology Inc.

Appendix C. Silk Screens

C.1 INTRODUCTION

This appendix shows the top and bottom silk screen images of the EVB-LAN8770-RMII™ Evaluation Board.

FIGURE C-1: .EVB-LAN8770-RMII™ TOP SILK SCREEN IMAGE

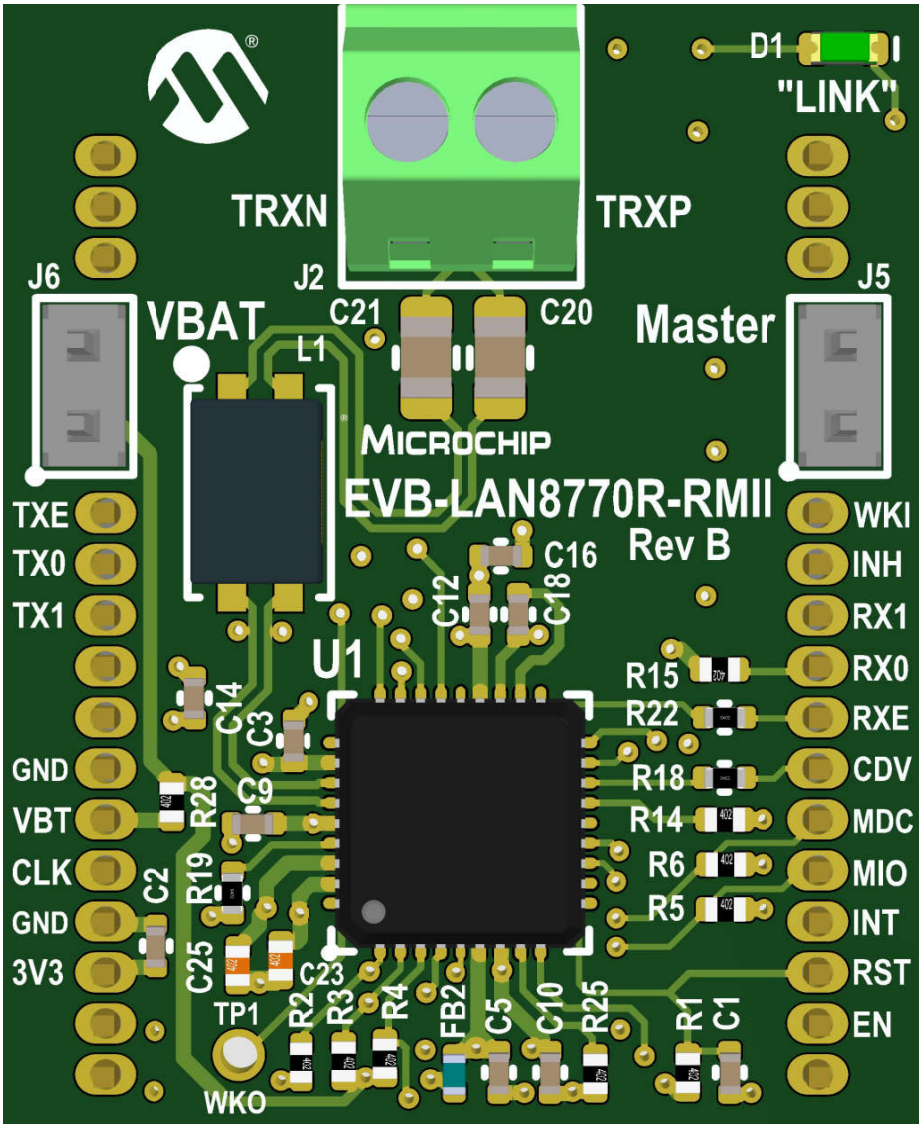

© 2020 Microchip Technology Inc.

FIGURE C-2: EVB-LAN8770-RMII™ BOTTOM SILK SCREEN IMAGE

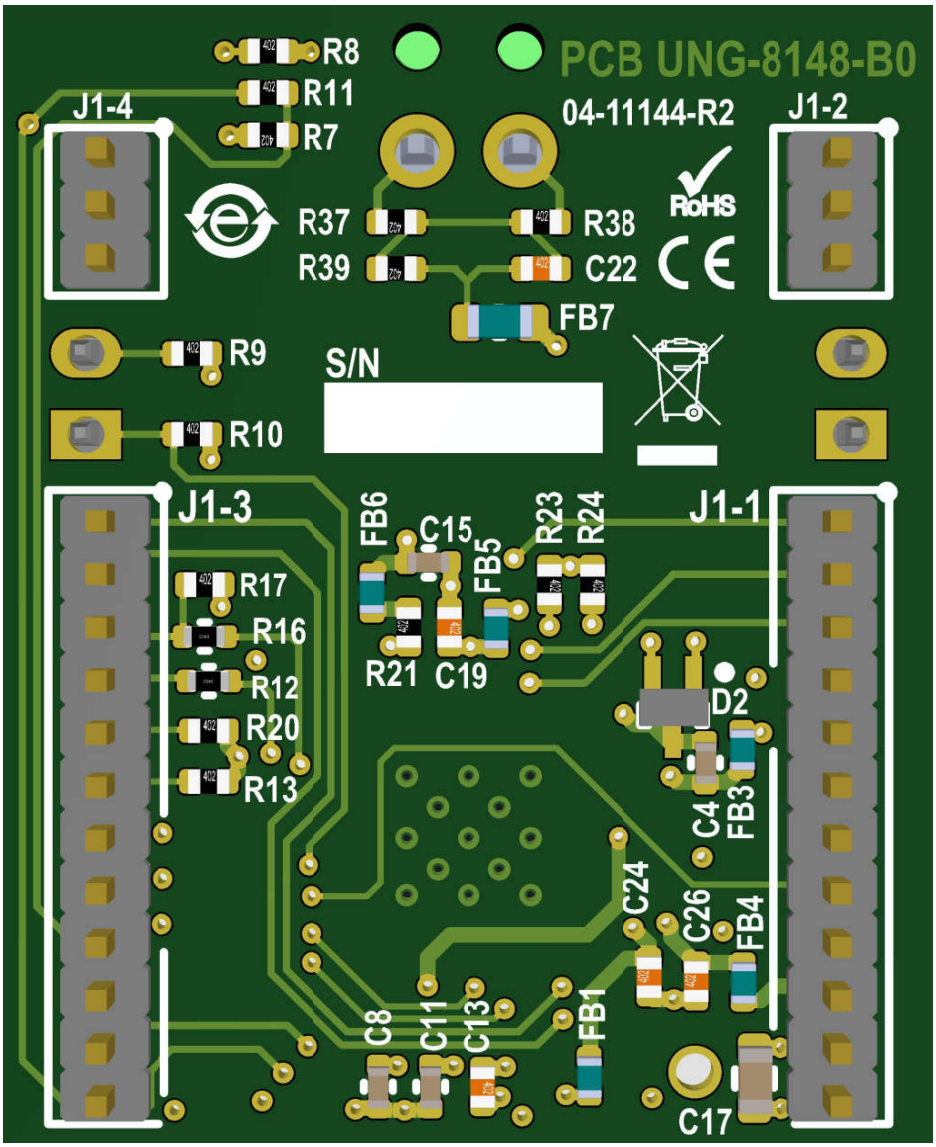

Worldwide Sales and Service

AMERICAS

Corporate Office
2355 West Chandler Blvd.
Chandler, AZ 85224-6199
Tel: 480-792-7200
Fax: 480-792-7277
Technical Support:
http://www.microchip.com/support
Web Address:
www.microchip.com

Atlanta
Duluth, GA
Tel: 678-957-9614
Fax: 678-957-1455

Austin, TX
Tel: 512-257-3370

Boston
Westborough, MA
Tel: 774-760-0087
Fax: 774-760-0088

Chicago
Itasca, IL
Tel: 630-285-0071
Fax: 630-285-0075

Dallas
Addison, TX
Tel: 972-818-7423
Fax: 972-818-2924

Detroit
Novi, MI
Tel: 248-848-4000

Houston, TX
Tel: 281-894-5983

Indianapolis
Noblesville, IN
Tel: 317-773-8323
Fax: 317-773-5453
Tel: 317-536-2380

Los Angeles
Mission Viejo, CA
Tel: 949-462-9523
Fax: 949-462-9608
Tel: 951-273-7800

Raleigh, NC
Tel: 919-844-7510

New York, NY
Tel: 631-435-6000

San Jose, CA
Tel: 408-735-9110
Tel: 408-436-4270

Canada - Toronto
Tel: 905-695-1980
Fax: 905-695-2078

ASIA/PACIFIC

Australia - Sydney
Tel: 61-2-9868-6733

China - Beijing
Tel: 86-10-8569-7000

China - Chengdu
Tel: 86-28-8665-5511

China - Chongqing
Tel: 86-23-8980-9588

China - Dongguan
Tel: 86-769-8702-9880

China - Guangzhou
Tel: 86-20-8755-8029

China - Hangzhou
Tel: 86-571-8792-8115

China - Hong Kong SAR
Tel: 852-2943-5100

China - Nanjing
Tel: 86-25-8473-2460

China - Qingdao
Tel: 86-532-8502-7355

China - Shanghai
Tel: 86-21-3326-8000

China - Shenyang
Tel: 86-24-2334-2829

China - Shenzhen
Tel: 86-755-8864-2200

China - Suzhou
Tel: 86-186-6233-1526

China - Wuhan
Tel: 86-27-5980-5300

China - Xian
Tel: 86-29-8833-7252

China - Xiamen
Tel: 86-592-2388138

China - Zhuhai
Tel: 86-756-3210040

ASIA/PACIFIC

India - Bangalore
Tel: 91-80-3090-4444

India - New Delhi
Tel: 91-11-4160-8631

India - Pune
Tel: 91-20-4121-0141

Japan - Osaka
Tel: 81-6-6152-7160

Japan - Tokyo
Tel: 81-3-6880- 3770

Korea - Daegu
Tel: 82-53-744-4301

Korea - Seoul
Tel: 82-2-554-7200

Malaysia - Kuala Lumpur
Tel: 60-3-7651-7906

Malaysia - Penang
Tel: 60-4-227-8870

Philippines - Manila
Tel: 63-2-634-9065

Singapore
Tel: 65-6334-8870

Taiwan - Hsin Chu
Tel: 886-3-577-8366

Taiwan - Kaohsiung
Tel: 886-7-213-7830

Taiwan - Taipei
Tel: 886-2-2508-8600

Thailand - Bangkok
Tel: 66-2-694-1351

Vietnam - Ho Chi Minh
Tel: 84-28-5448-2100

EUROPE

Austria - Wels
Tel: 43-7242-2244-39
Fax: 43-7242-2244-393

Denmark - Copenhagen
Tel: 45-4485-5910
Fax: 45-4485-2829

Finland - Espoo
Tel: 358-9-4520-820

France - Paris
Tel: 33-1-69-53-63-20
Fax: 33-1-69-30-90-79

Germany - Garching
Tel: 49-8931-9700

Germany - Haan
Tel: 49-2129-3766400

Germany - Heilbronn
Tel: 49-7131-72400

Germany - Karlsruhe
Tel: 49-721-625370

Germany - Munich
Tel: 49-89-627-144-0
Fax: 49-89-627-144-44

Germany - Rosenheim
Tel: 49-8031-354-560

Israel - Ra'anana
Tel: 972-9-744-7705

Italy - Milan
Tel: 39-0331-742611
Fax: 39-0331-466781

Italy - Padova
Tel: 39-049-7625286

Netherlands - Drunen
Tel: 31-416-690399
Fax: 31-416-690340

Norway - Trondheim
Tel: 47-7288-4388

Poland - Warsaw
Tel: 48-22-3325737

Romania - Bucharest
Tel: 40-21-407-87-50

Spain - Madrid
Tel: 34-91-708-08-90
Fax: 34-91-708-08-91

Sweden - Gothenberg
Tel: 46-31-704-60-40

Sweden - Stockholm
Tel: 46-8-5090-4654

UK - Wokingham
Tel: 44-118-921-5800
Fax: 44-118-921-5820

© 2020 Microchip Technology Inc.