ATmega4809

Curiosity Nano

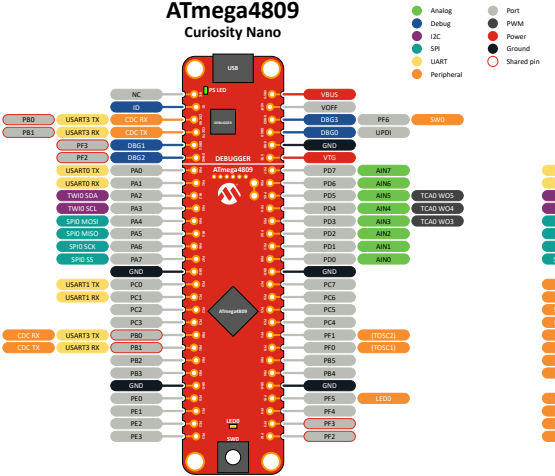

Curiosity Nano Explorer

Mapping

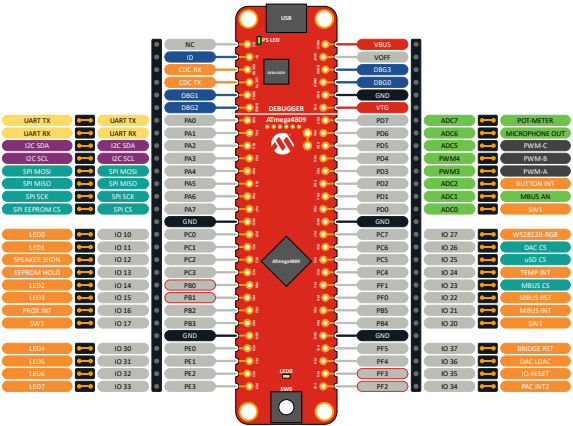

mikroBUS™

Socket

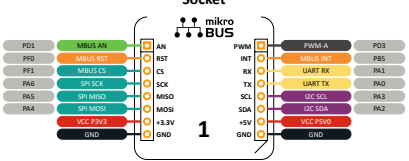

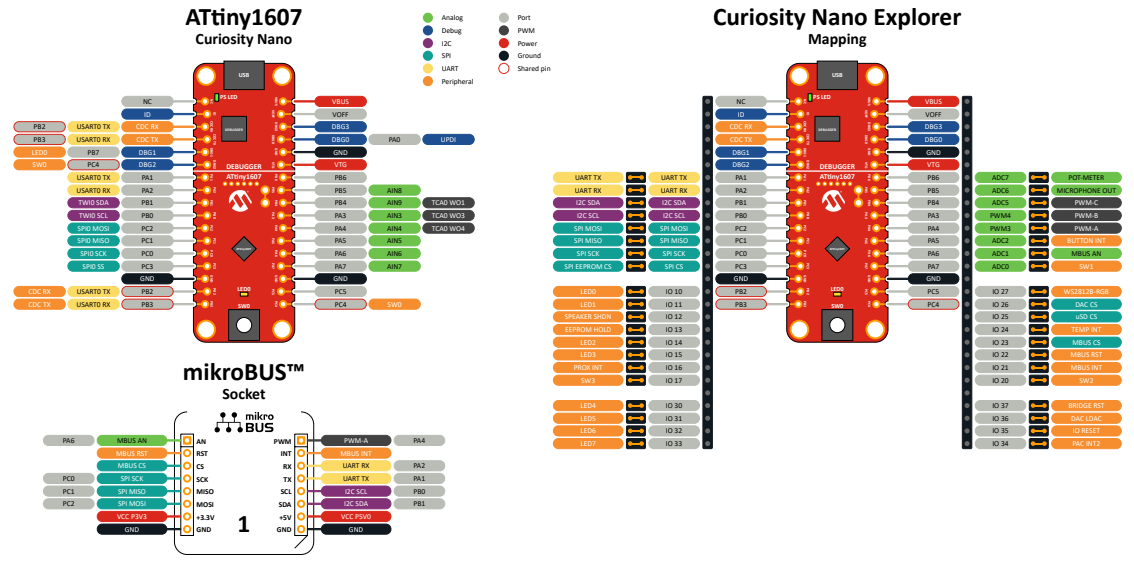
ATtiny1607
Curiosity Nano
Analog
Debug
I2C
SPI
UART
Peripheral
Port
PWM
Power
Ground
Shared pin
USB
PS LED
DEBUGGER
ATtiny1607
LED0
SW0
NC
ID
CDC RX
CDC TX
DBG1
DBG2
PA1
PA2
PB1
PB0
PC2
PC1
PC0
PC3
GND
PB2
PB3
VBUS
VOFF
DBG3
DBG0
GND
VTG
PB6
PB5
PB4
PA3
PA4
PA5
PA6
PA7
GND
PC5
PC4
PA0
UPDI
AIN8
AIN9
AIN3
AIN4
AIN5
AIN6
AIN7
TCA0 WO1
TCA0 WO3
TCA0 WO4
USART0 TX
USART0 RX
TWI0 SDA
TWI0 SCL
SPI0 MOSI
SPI0 MISO
SPI0 SCK
SPI0 SS
CDC RX
CDC TX
SWD
Curiosity Nano Explorer
Mapping
UART TX
UART RX
I2C SDA
I2C SCL
SPI MOSI
SPI MISO
SPI SCK
SPI EEPROM CS
LED0
LED1
SPEAKER SHDN
EEPROM HOLD
LED2
LED3
PRCK INT
SW3
LED4
LED5
LED6
LED7
IO 10
IO 11
IO 12
IO 13
IO 14
IO 15
IO 16
IO 17
IO 30
IO 31
IO 32
IO 33
ADC7
ADC6
ADC5
PWM4
PWM3
ADC2
ADC1
ADC0
POT-METER
MICROPHONE OUT
PWM-C
PWM-B
PWM-A
BUTTON INT
MBUS AN
SW1
IO 27
IO 26
IO 25
IO 24
IO 23
IO 22
IO 21
IO 20
WS2812B-RGB
DAC CS
uSD CS
TEMP INT
MBUS CS
MBUS RST
MBUS INT
SW2
IO 37
IO 36
IO 35
IO 34
BRIDGE RST
DAC I2AC
IO RESET
PAC INT2
mikroBUS™
Socket
mikro BUS
PA6
MBUS AN
MBUS RST
MBUS CS
PC0
SPI SCK
PC1
SPI MISO
PC2
SPI MOSI
VCC 3V3
GND
AN
RST
CS
SCK
MISO
MOSI
+3.3V
GND
1
PWM
INT
RX
TX
SCL
SDA
+5V
GND
PWM-A
MBUS INT
UART RX
UART TX
I2C SCL
I2C SDA
VCC 5V0
GND
PA4
PA2
PA1
PB0
PB1

ATtiny1627

Curiosity Nano

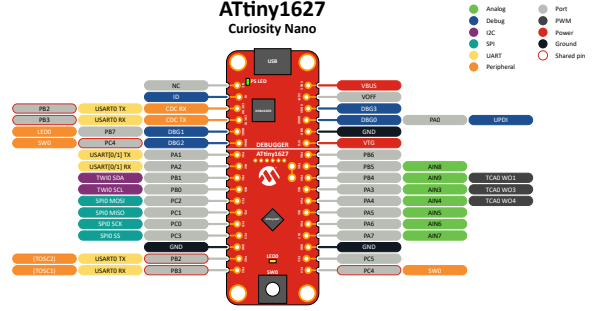

mikroBUS™

Socket

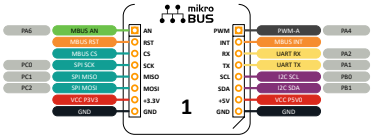

Curiosity Nano Explorer

Mapping

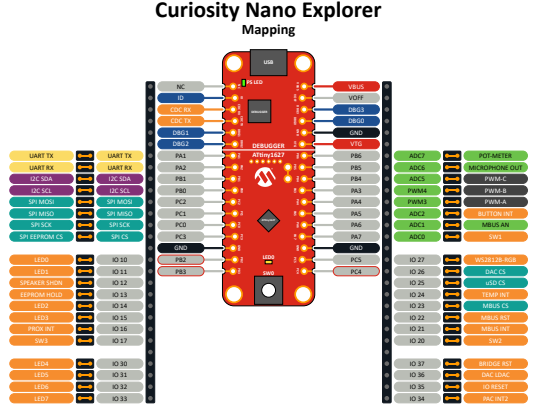

ATtiny3217

Curiosity Nano

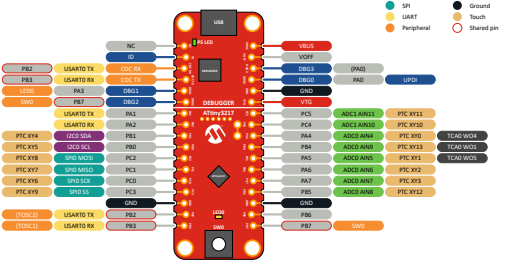

mikroBUS™

Socket

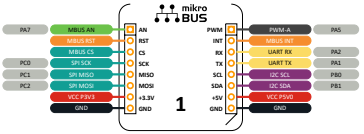

Curiosity Nano Explorer

Mapping

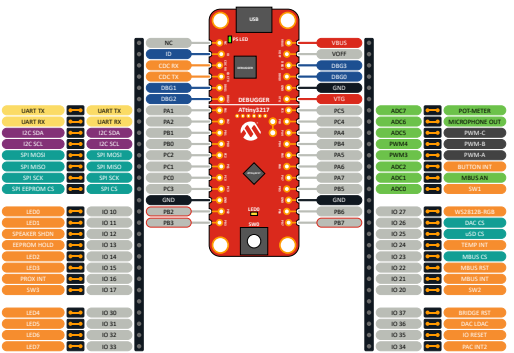

AVR128DA48

Curiosity Nano

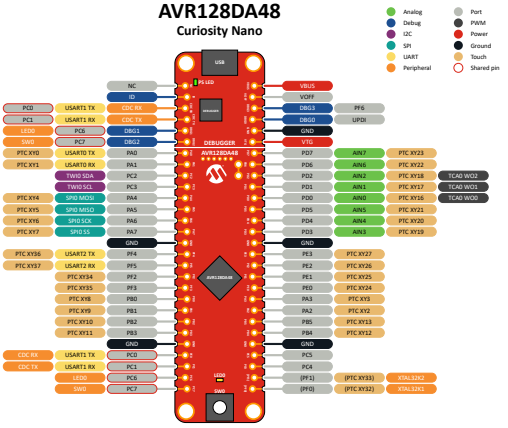

Curiosity Nano Explorer

Mapping

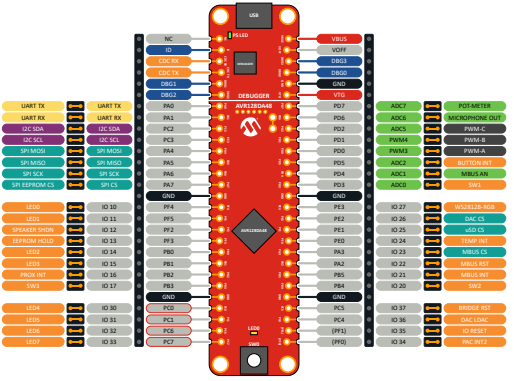

mikroBUS™

Socket

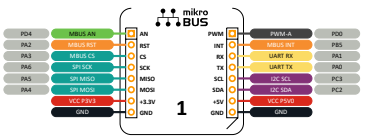

AVR128DB48

Curiosity Nano

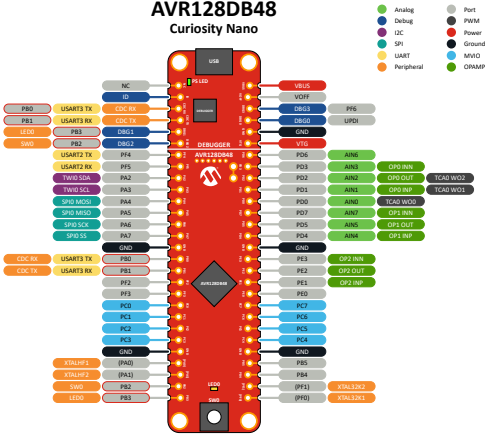

Curiosity Nano Explorer

Mapping

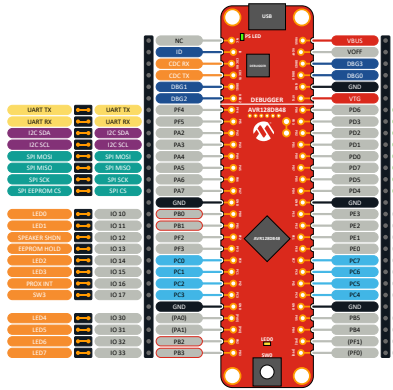

mikroBUS™

Socket

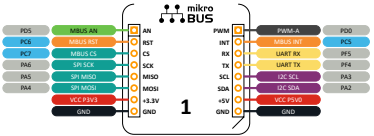

AVR16EB32

Curiosity Nano

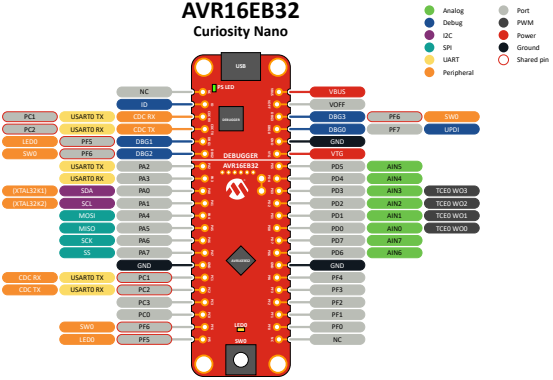

mikroBUS™

Socket

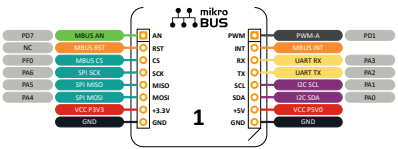

Curiosity Nano Explorer

Mapping

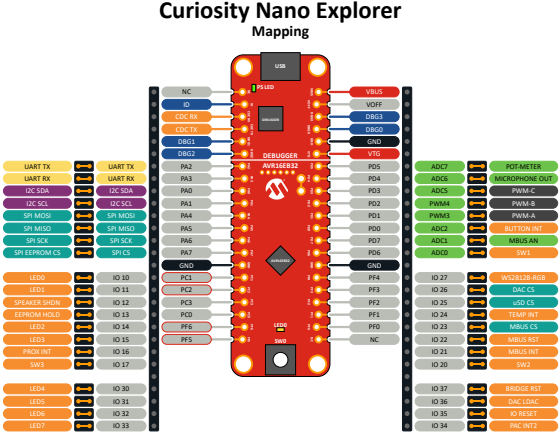

AVR64DD32

Curiosity Nano

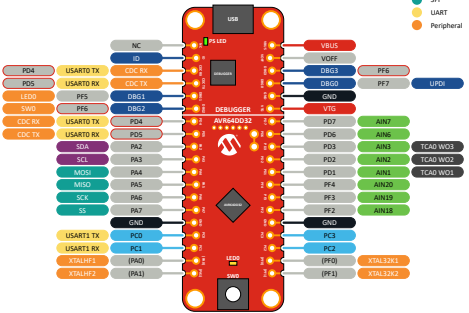

mikroBUS™

Socket

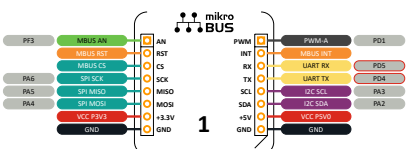

Curiosity Nano Explorer

Mapping

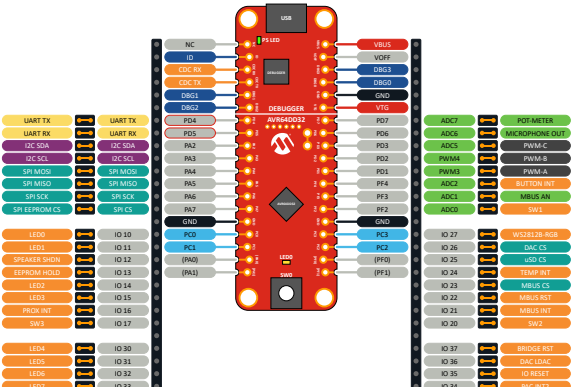

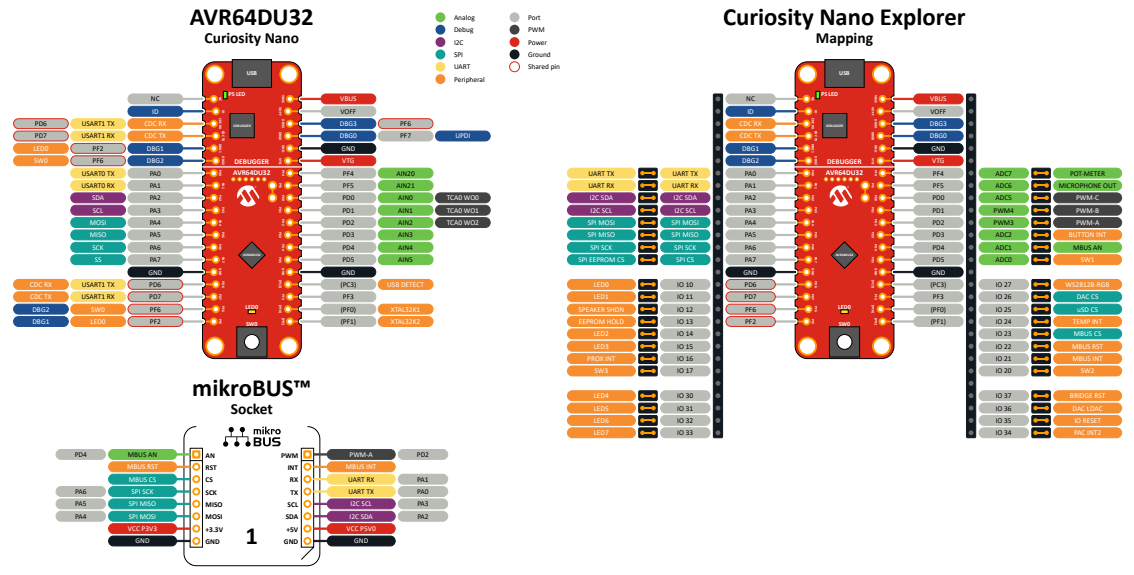
AVR64DU32
Curiosity Nano
Analog
Debug
I2C
SPI
UART
Peripheral
Port
PWM
Power
Ground
Shared pin
NC
ID
VBUS
VOFF
PD6
USART1 TX
CDC RX
DBG3
PF6
LIPDI
PD7
USART1 RX
CDC TX
DBG0
PF7
LED0
PF2
DBG1
GND
SW0
PF6
DBG2
VTG
USART0 TX
PA0
PF4
AIN20
USART0 RX
PA1
PF5
AIN21
SDA
PA2
PD0
AIN0
TCA0 WOD
SCL
PA3
PD1
AIN1
TCA0 WO1
MOSI
PA4
PD2
AIN2
TCA0 WO2
MISO
PA5
PD3
AIN3
SCK
PA6
PD4
AIN4
SS
PA7
PD5
AIN5
GND
GND
CDC RX
USART1 TX
PD6
(PC3)
USB DETECT
CDC TX
USART1 RX
PD7
PF3
DBG2
SW0
PF6
(PF0)
XTAL32K1
DBG1
LED0
PF2
(PF1)
XTAL32K2
USB
PS LED
DEBUGGER
AVR64DU32
LED0
SW0
Curiosity Nano Explorer
Mapping
UART TX
UART RX
I2C SDA
I2C SCL
SPI MOSI
SPI MISO
SPI SCK
SPI EEPROM CS
SPI CS
LED0
IO 10
LED1
IO 11
SPEAKER SHDN
IO 12
EEPROM HOLD
IO 13
LED2
IO 14
LED3
IO 15
PROX INT
IO 16
SW3
IO 17
LED4
IO 30
LED5
IO 31
LED6
IO 32
LED7
IO 33
ADC7
POT-METER
ADC6
MICROPHONE OUT
ADC5
PWM-C
PWM4
PWM-B
PWM3
PWM-A
ADC2
BUTTON INT
ADC1
MBUS AN
ADC0
SW1
IO 27
WS2812B-RGB
IO 26
DAC CS
IO 25
uSD CS
IO 24
TEMP INT
IO 23
MBUS CS
IO 22
MBUS RST
IO 21
MBUS INT
IO 20
SW2
IO 37
BRIDGE RST
IO 36
DAC LDAC
IO 35
IO RESET
IO 34
PAC INT2
mikroBUS™
Socket
mikro BUS
PD4
MBUS AN
AN
PWM
PWM-A
PD2
MBUS RST
RST
INT
MBUS INT
MBUS CS
CS
RX
UART RX
PA1
PA6
SPI SCK
SCK
TX
UART TX
PA0
PA5
SPI MISO
MISO
SCL
I2C SCL
PA3
PA4
SPI MOSI
MOSI
SDA
I2C SDA
PA2
VCC P3V3
+3.3V
+5V
VCC P5V0
GND
GND
GND
GND
1

AVR64EA48

Curiosity Nano

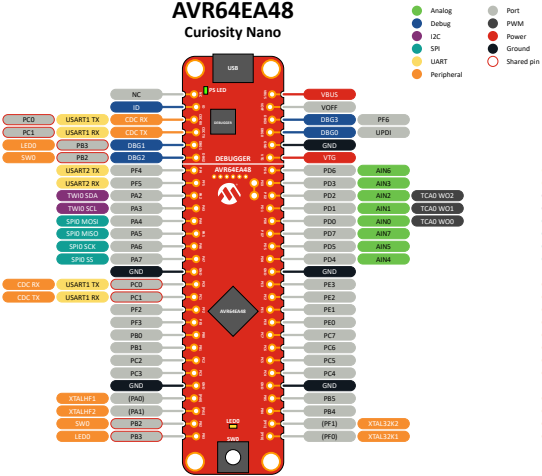

Curiosity Nano Explorer

Mapping

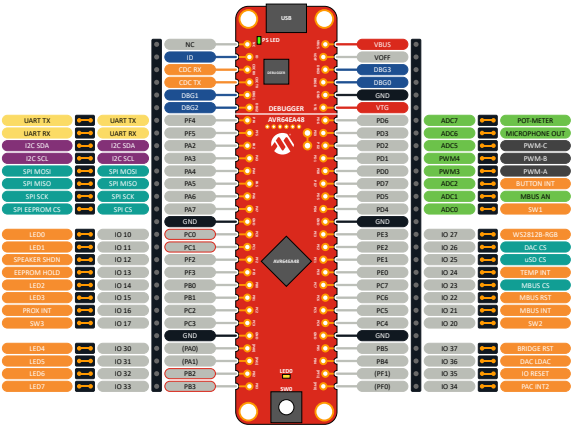

mikroBUS™

Socket

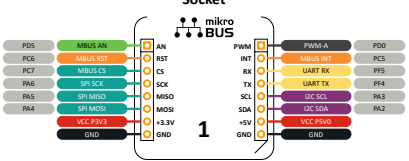

dsPIC33CK64MC105

Curiosity Nano

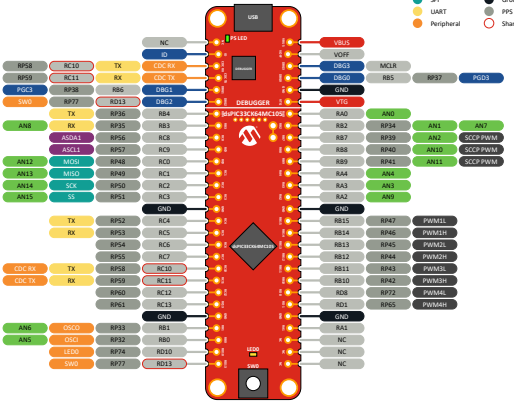
Analog
Debug
I2C
SPI
UART
Peripheral
Port
PWM
Power
Ground
PPS
Shared pin
USB
PS LED
EDBG/DEBUG
DEBUGGER
dsPIC33CK64MC105
LED0
SW0
NC
ID
CDC RX
CDC TX
DBG1
DBG2
TX
RX
SCL
SDA
SCK
MISO
MOSI
SS
GND
VBUS
VOFF
DBG3
DBG0
GND
VTG
MCLR
RB5
PGD3
AN0
AN1
AN2
AN10
AN11
AN7
SCCP PWM
PWM1L
PWM1H
PWM2L
PWM2H
PWM3L
PWM3H
PWM4L
PWM4H
OSCO
OSCI
RP32
RP33
RP24
RD10
RD13
RB0
RB1
RA1
RA10
RA11
RA12
RA13
RA14
RA15
RB1
RB2
RB3
RB4
RB5
RB6
RB7
RB8
RB9
RA4
RA3
RA2
RB15
RB14
RB13
RB12
RB11
RB10
RD8
RD1
RD9
RC4
RC5
RC6
RC7
RC10
RC11
RC12
RC13
RP52
RP53
RP54
RP55
RP58
RP59
RP60
RP61
RP56
RP57
RP48
RP49
RP50
RP51
RP35
RP36
RP34
RP39
RP40
RP41
RP42
RP43
RP44
RP45
RP46
RP47
RP72
RP65
RC0
RC1
RC2
RC3
RB10
RB11
RB12
RB13
RB14
RB15
RA0
RA1
RA2
RA3
RA4
RA5
RA6
RA7
RB0
RB1
RB2
RB3
RB4
RB5
RB6
RB7
RB8
RB9
RC0
RC1
RC2
RC3
RC4
RC5
RC6
RC7
RC10
RC11
RC12
RC13
RB1
RB0
RA10
RA11
RA12
RA13
RA14
RA15
RD1
RD8
RD9
RA1
NC
NC
NC

PIC16F13145

Curiosity Nano

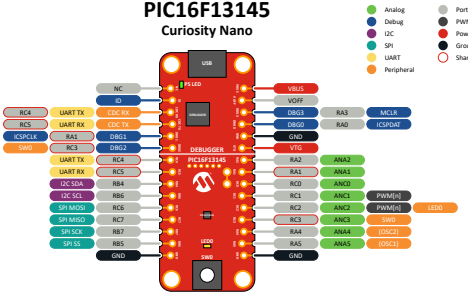

mikroBUS™

Socket

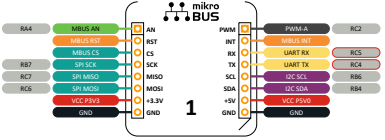

Curiosity Nano Explorer

Mapping

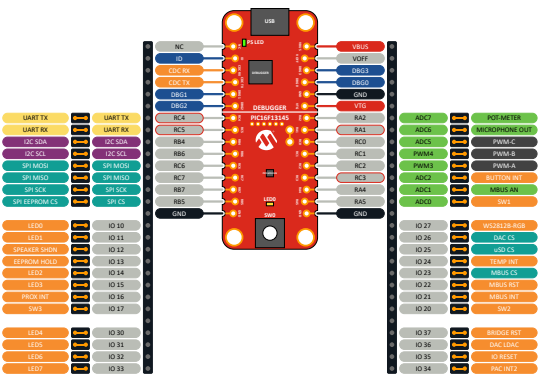

PIC16F15244

Curiosity Nano

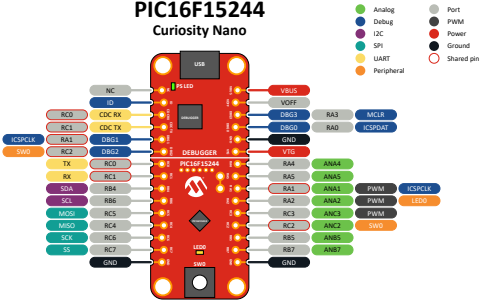

mikroBUS™

Socket

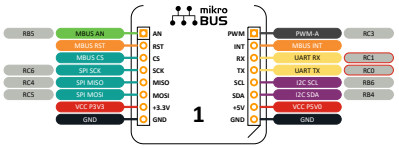

Curiosity Nano Explorer

Mapping

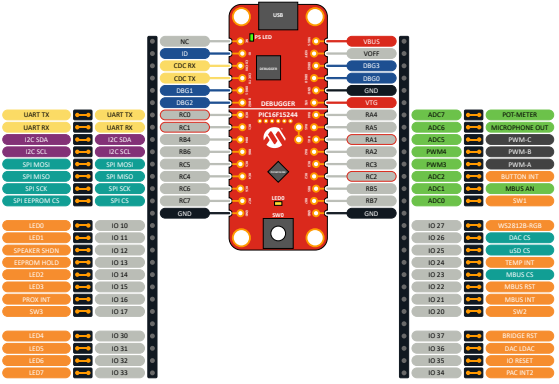

PIC16F15276

Curiosity Nano

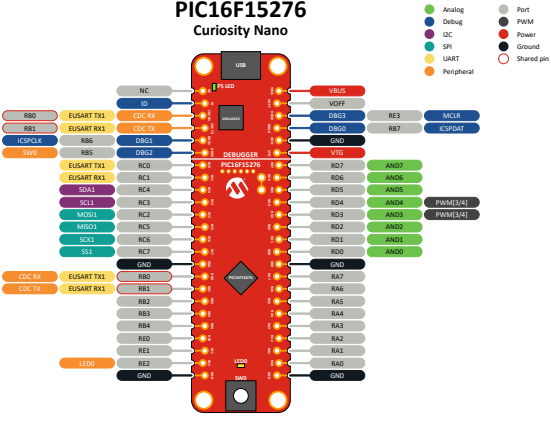

Curiosity Nano Explorer

Mapping

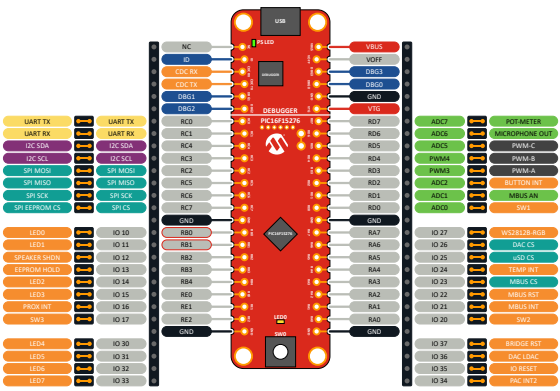

mikroBUS™

Socket

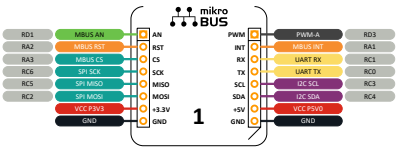

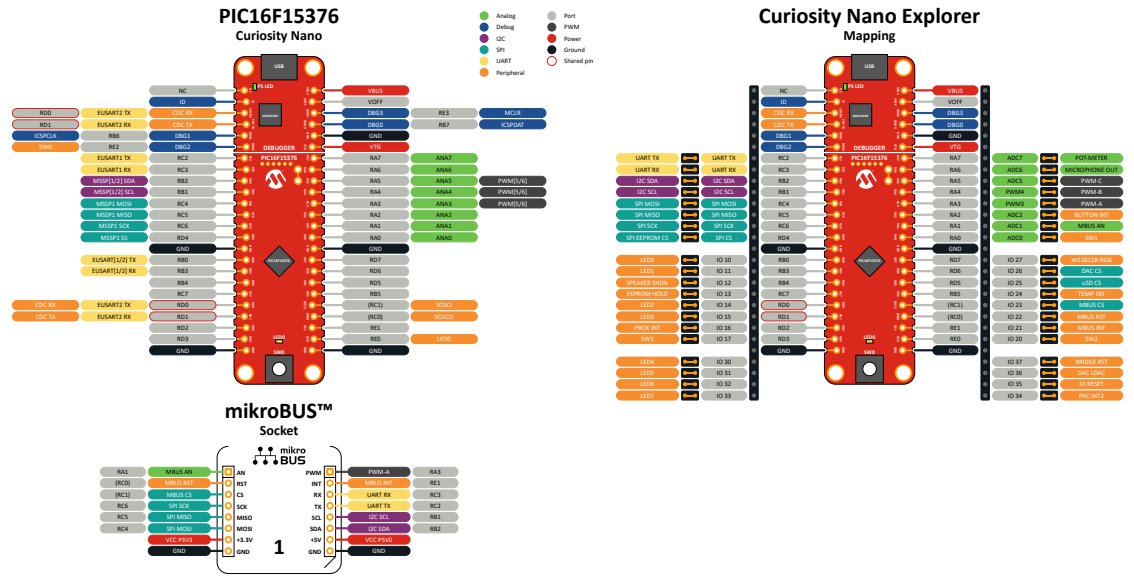
PIC16F15376
Curiosity Nano
Analog
Digital
I2C
SPI
UART
Peripheral
Port
PWM
Power
Ground
Shared pin
Curiosity Nano Explorer
Mapping
mikroBUS™
Socket
mikro BUS
1

PIC16F17146

Curiosity Nano

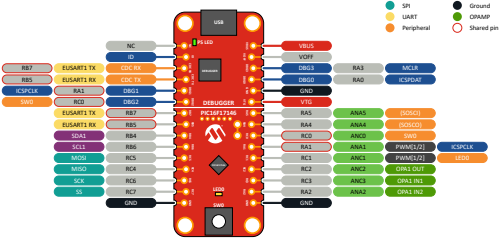

mikroBUS™

Socket

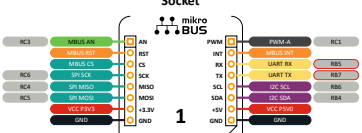

Curiosity Nano Explorer

Mapping

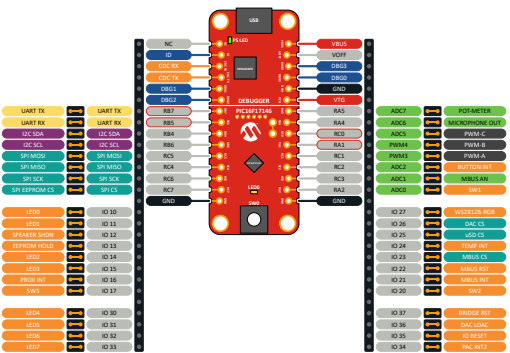

PIC16F18076

Curiosity Nano

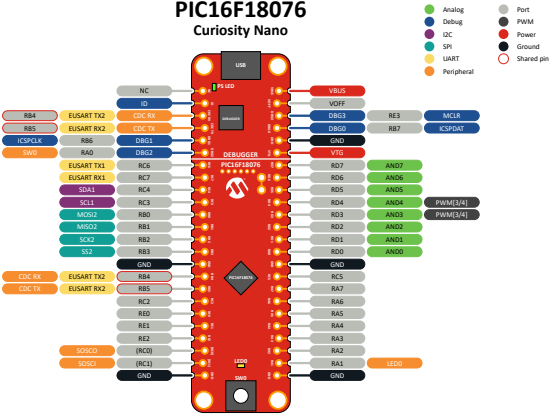

Curiosity Nano Explorer

Mapping

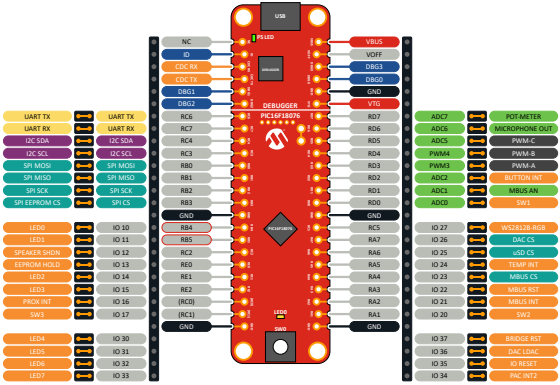

mikroBUS™

Socket

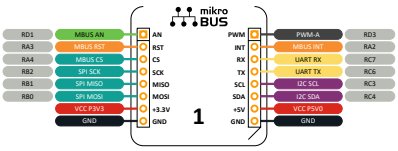

PIC16F18446

Curiosity Nano

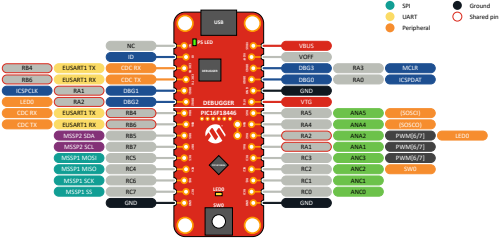

mikroBUS™

Socket

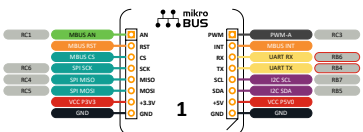

Curiosity Nano Explorer

Mapping

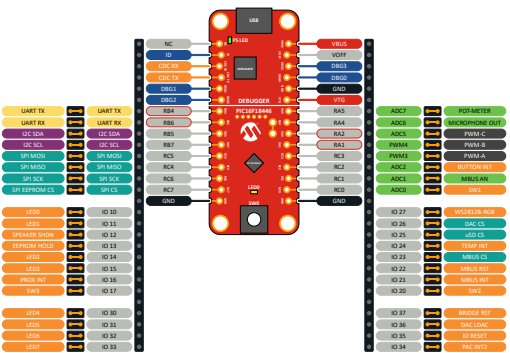

PIC18F16Q20

Curiosity Nano

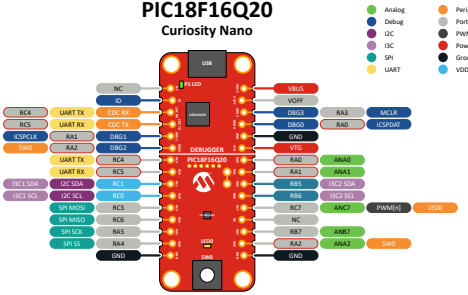

mikroBUS™

Socket

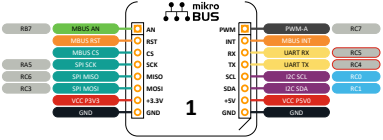

Curiosity Nano Explorer

Mapping

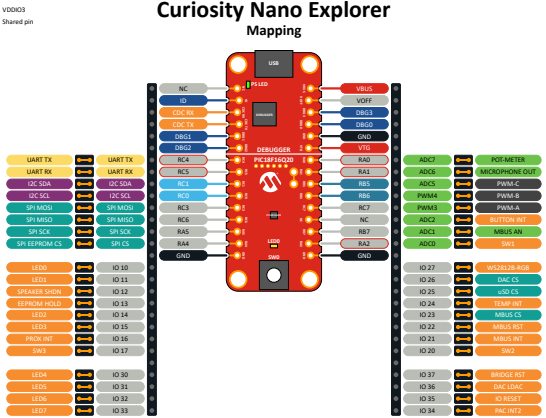

PIC18F16Q40

Curiosity Nano

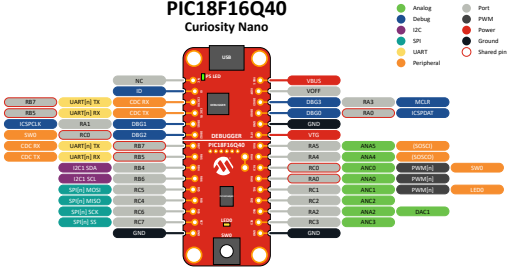

mikroBUS™

Socket

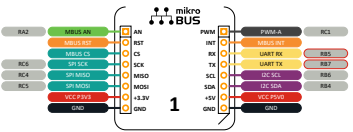

Curiosity Nano Explorer

Mapping

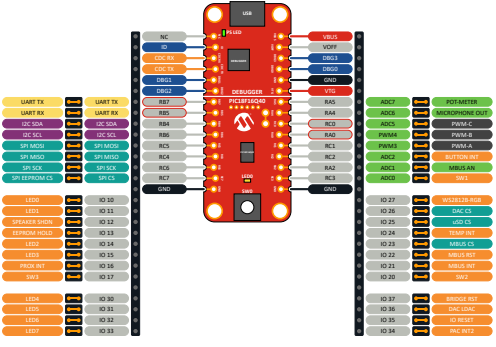

PIC18F16Q41

Curiosity Nano

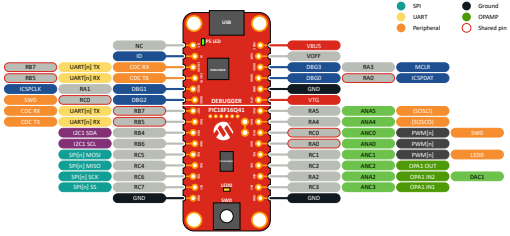

mikroBUS™

Socket

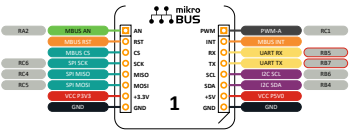

Curiosity Nano Explorer

Mapping

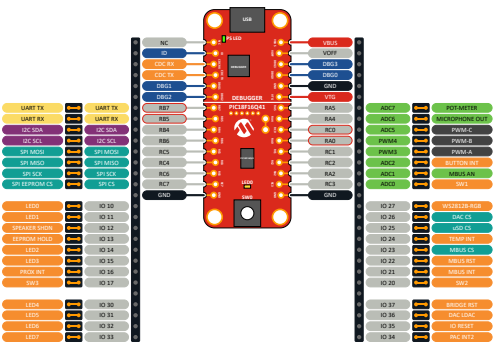

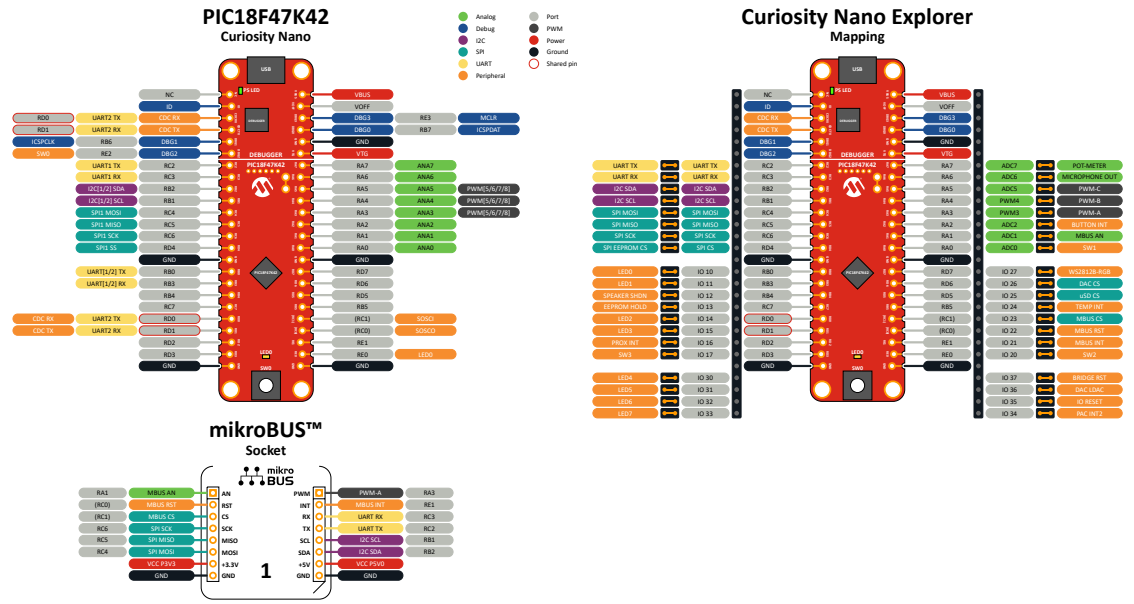
PIC18F47K42
Curiosity Nano
Analog
Debug
I2C
SPI
UART
Peripheral
Port
PWM
Power
Ground
Shared pin
USB
PS LED
DEBUGGER
PIC18F47K42
PICKIT4/SNAP
LED0
SW0
NC
ID
CDC RX
CDC TX
DBG1
DBG2
RC2
RC3
RB2
RB1
RC4
RC5
RC6
RD4
GND
RB0
RB3
RB4
RC7
RD0
RD1
RD2
RD3
GND
VBUS
VOFF
DBG3
DBG0
GND
V.TG
RA7
RA6
RA5
RA4
RA3
RA2
RA1
RA0
GND
RD7
RD6
RD5
RB5
(RC1)
(RC0)
RE1
RE0
GND
RD0
UART2 TX
RD1
UART2 RX
RB6
RE2
UART1 TX
UART1 RX
I2C[1/2] SDA
I2C[1/2] SCL
SPI1 MOSI
SPI1 MISO
SPI1 SCK
SPI1 SS
UART1[1/2] TX
UART1[1/2] RX
CDC RX
CDC TX
RE3
RB7
MCLR
ICSPDAT
ANA7
ANA6
ANA5
ANA4
ANA3
ANA2
ANA1
ANA0
PWM[5/6/7/8]
PWM[5/6/7/8]
PWM[5/6/7/8]
SOSCI
SOSCO
LED0
RD0
RD1
CDC RX
CDC TX
ICSPCLK
SWD
Curiosity Nano Explorer
Mapping
UART TX
UART RX
I2C SDA
I2C SCL
SPI MOSI
SPI MISO
SPI SCK
SPI EEPROM CS
LED0
LED1
SPEAKER SHDN
EEPROM HOLD
LED2
LED3
PROX INT
SW1
LED4
LED5
LED6
LED7
IO 10
IO 11
IO 12
IO 13
IO 14
IO 15
IO 16
IO 17
IO 30
IO 31
IO 32
IO 33
ADC7
ADC6
ADC5
PWM4
PWM3
ADC2
ADC1
ADC0
IO 27
IO 26
IO 25
IO 24
IO 23
IO 22
IO 21
IO 20
IO 37
IO 36
IO 35
IO 34
POT-METER
MICROPHONE OUT
PWM-C
PWM-B
PWM-A
BUTTON INT
MBUS AN
SW1
WS2812B-RGB
DAC CS
uSD CS
TEMP INT
MBUS CS
MBUS RST
MBUS INT
SW2
BRIDGE RST
DAC I2SDAC
IO RESET
PAC INT2
mikroBUS™
Socket
mikro BUS
RA1
(RC0)
(RC1)
RC6
RC5
RC4
MBUS AN
MBUS RST
MBUS CS
SPI SCK
SPI MISO
SPI MOSI
VCC P3V3
GND
AN
RST
CS
SCK
MISO
MOSI
+3.3V
GND
PWM
INT
RX
TX
SCL
SDA
+5V
GND
PWM-A
MBUS INT
UART RX
UART TX
I2C SCL
I2C SDA
VCC P5V0
GND
RA3
RE1
RC3
RC2
RB1
RB2
1

PIC18F47Q10

Curiosity Nano

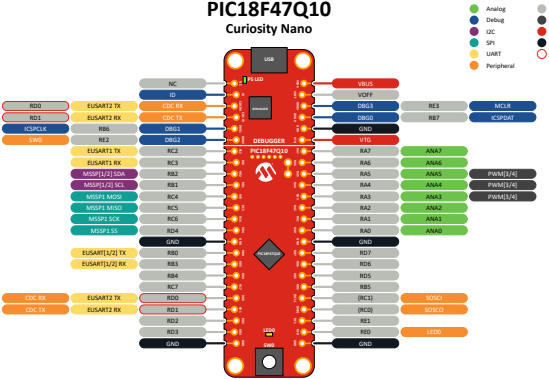

Curiosity Nano Explorer

Mapping

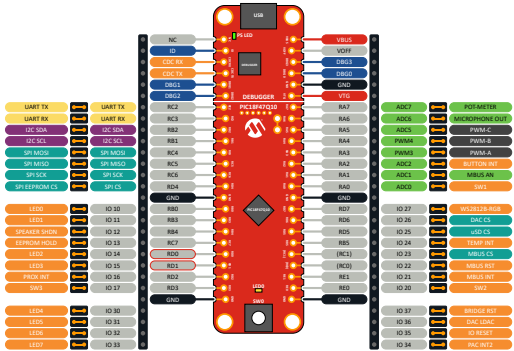

mikroBUS™

Socket

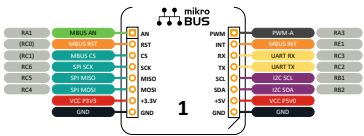

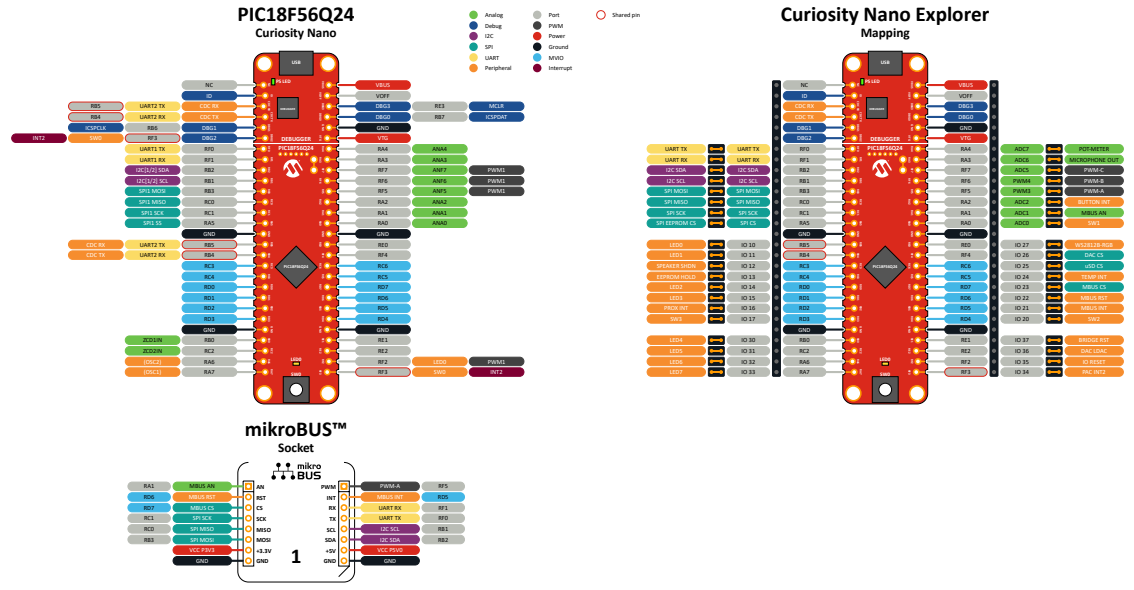
PIC18F56Q24
Curiosity Nano
Analog
Debug
I2C
SPI
UART
Peripheral
Port
PWM
Power
Ground
MVIO
Interrupt
Shared pin
Curiosity Nano Explorer
Mapping
mikroBUS™
Socket
mikro BUS
1

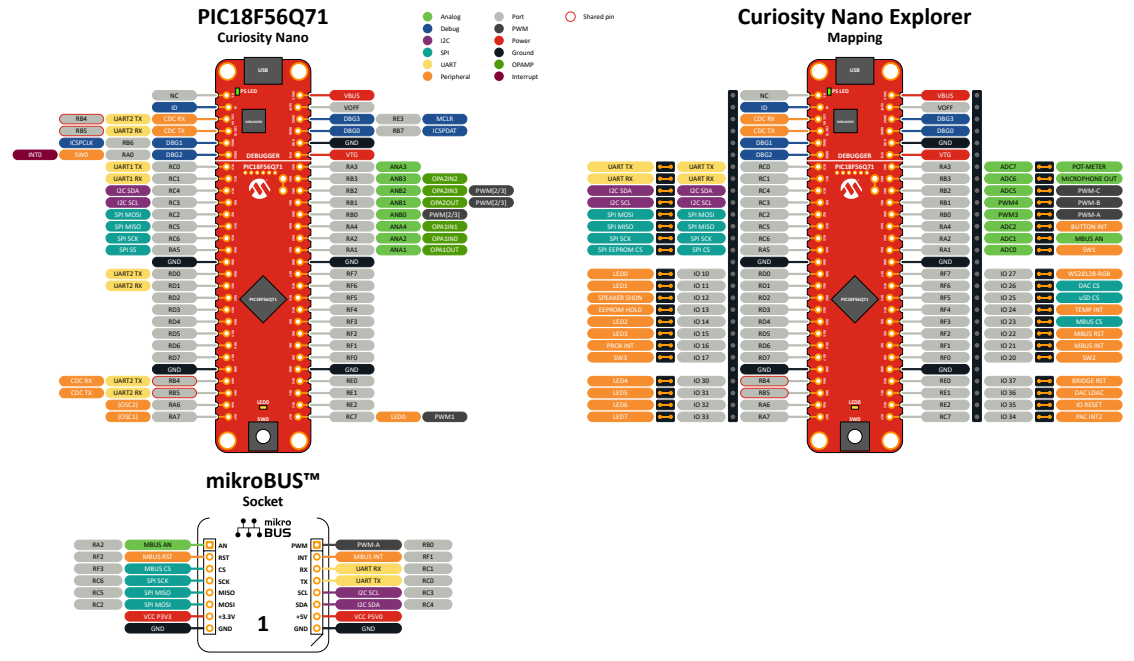
PIC18F56Q71
Curiosity Nano
Analog
Debug
I2C
SPI
UART
Peripheral
Port
PWM
Power
Ground
OPAMP
Interrupt
Shared pin
Curiosity Nano Explorer
Mapping
mikroBUS™
Socket

PIC18F57Q43

Curiosity Nano

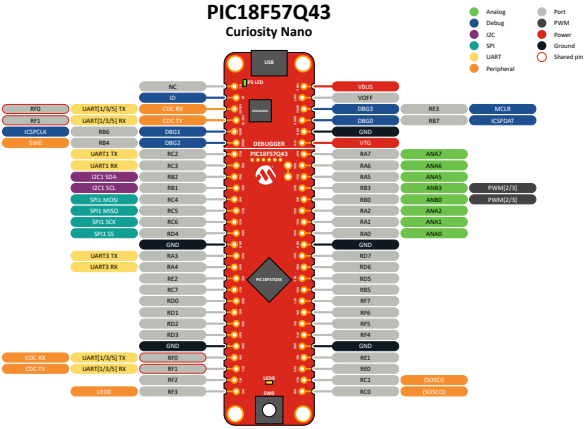

Curiosity Nano Explorer

Mapping

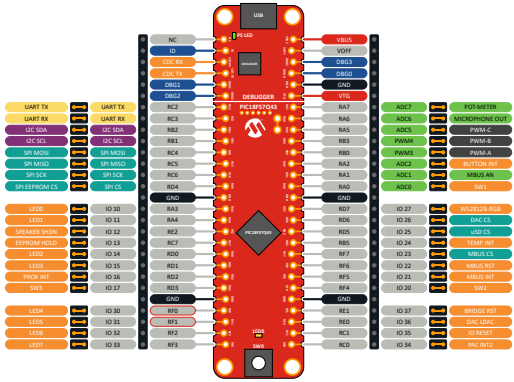

mikroBUS™

Socket

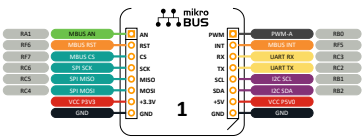

PIC18F57Q84

Curiosity Nano

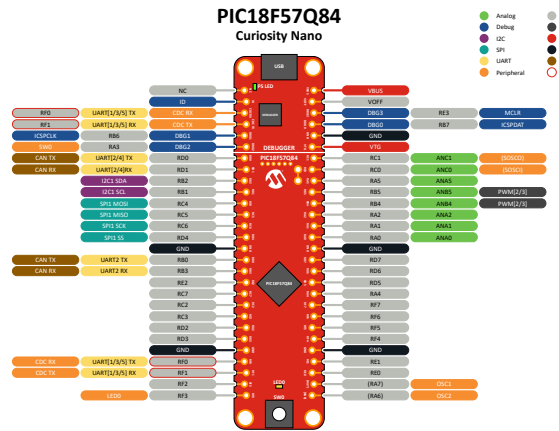

Curiosity Nano Explorer

Mapping

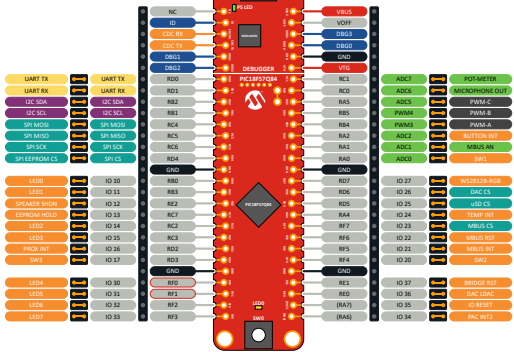

mikroBUS™

Socket

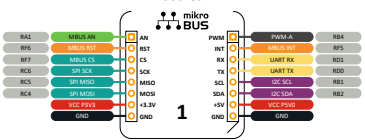

PIC24FJ64GU205

Curiosity Nano

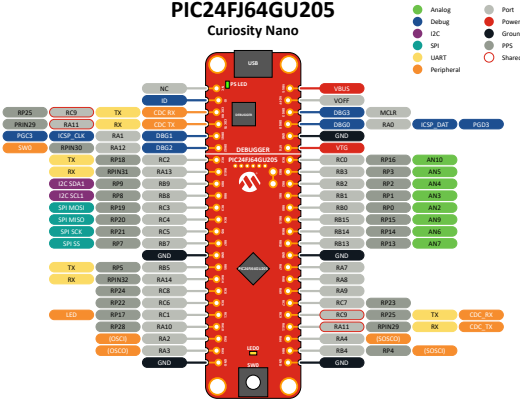

Curiosity Nano Explorer

Mapping

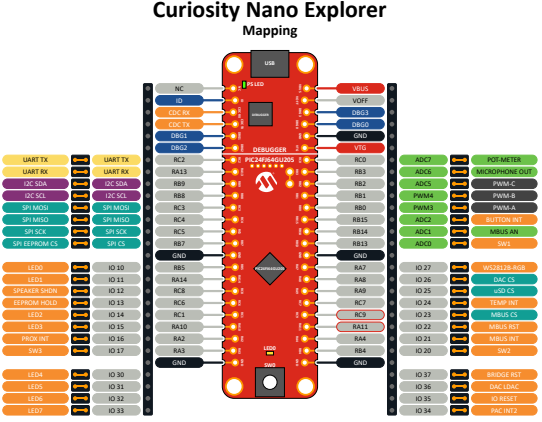

mikroBUS™

Socket

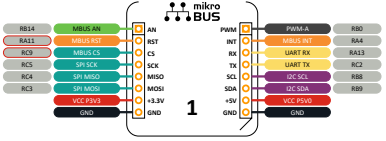

PIC32CM MC00

Curiosity Nano

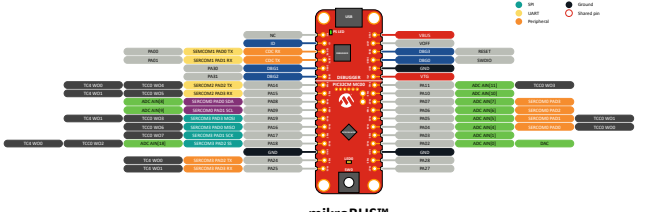

mikroBUS™

Socket



Curiosity Nano Explorer

Mapping

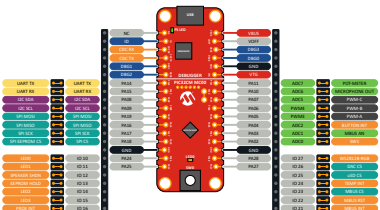

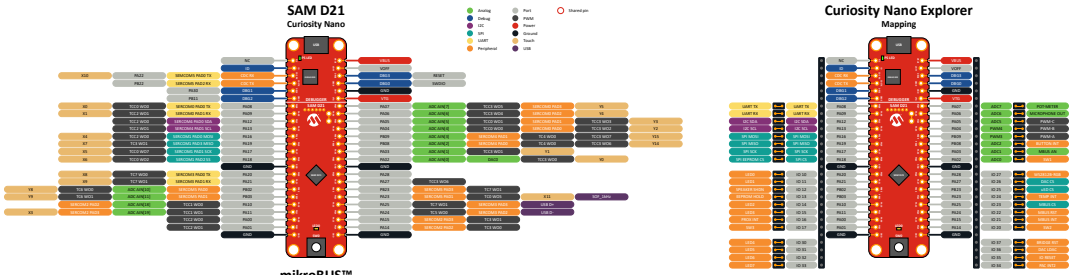
SAM D21
Curiosity Nano
Analog
Debug
I2C
SPI
UART
Peripheral
Port
PWM
Power
Ground
Touch
USB
Shared pin
Curiosity Nano Explorer
Mapping
mikroBUS™
Socket
mikro
BUS
1

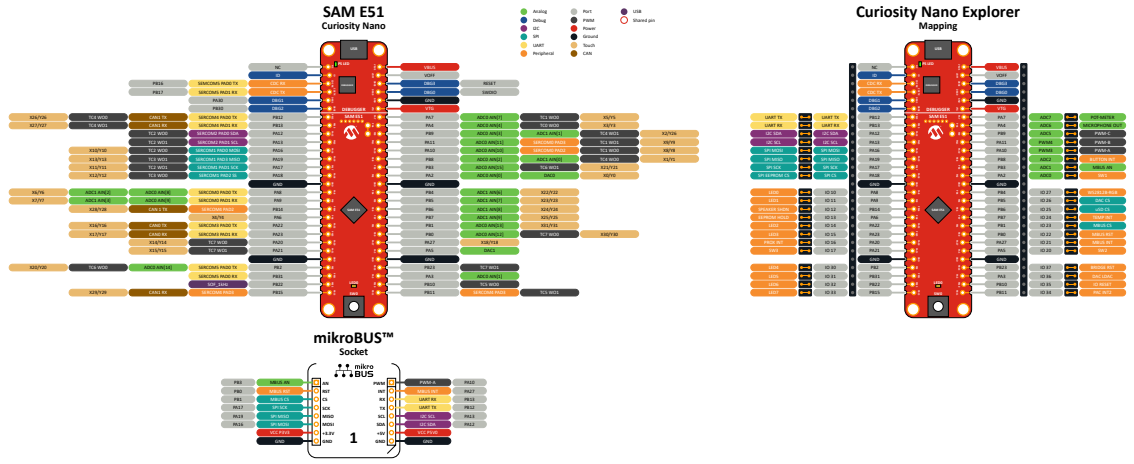
SAM E51
Curiosity Nano
Analog
Digital
I2C
SPI
UART
Peripheral
Port
PWM
Power
Ground
Touch
CAN
USB
Shared pin
Curiosity Nano Explorer
Mapping
mikroBUS™
Socket
mikro BUS
1