

EVB-USB5807/6 Evaluation Board User's Guide

© 2016 Microchip Technology Inc.

Note the following details of the code protection feature on Microchip devices:

- Microchip products meet the specification contained in their particular Microchip Data Sheet.
- Microchip believes that its family of products is one of the most secure families of its kind on the market today, when used in the intended manner and under normal conditions.
- There are dishonest and possibly illegal methods used to breach the code protection feature. All of these methods, to our knowledge, require using the Microchip products in a manner outside the operating specifications contained in Microchip's Data Sheets. Most likely, the person doing so is engaged in theft of intellectual property.
- Microchip is willing to work with the customer who is concerned about the integrity of their code.
- Neither Microchip nor any other semiconductor manufacturer can guarantee the security of their code. Code protection does not mean that we are guaranteeing the product as "unbreakable."

Code protection is constantly evolving. We at Microchip are committed to continuously improving the code protection features of our products. Attempts to break Microchip's code protection feature may be a violation of the Digital Millennium Copyright Act. If such acts allow unauthorized access to your software or other copyrighted work, you may have a right to sue for relief under that Act.

Information contained in this publication regarding device applications and the like is provided only for your convenience and may be superseded by updates. It is your responsibility to ensure that your application meets with your specifications. MICROCHIP MAKES NO REPRESENTATIONS OR WARRANTIES OF ANY KIND WHETHER EXPRESS OR IMPLIED, WRITTEN OR ORAL, STATUTORY OR OTHERWISE, RELATED TO THE INFORMATION, INCLUDING BUT NOT LIMITED TO ITS CONDITION, QUALITY, PERFORMANCE, MERCHANTABILITY OR FITNESS FOR PURPOSE**.** Microchip disclaims all liability arising from this information and its use. Use of Microchip devices in life support and/or safety applications is entirely at the buyer's risk, and the buyer agrees to defend, indemnify and hold harmless Microchip from any and all damages, claims, suits, or expenses resulting from such use. No licenses are conveyed, implicitly or otherwise, under any Microchip intellectual property rights unless otherwise stated.

Trademarks

The Microchip name and logo, the Microchip logo, AnyRate, dsPIC, FlashFlex, flexPWR, Heldo, JukeBlox, KeeLoq, KeeLoq logo, Kleer, LANCheck, LINK MD, MediaLB, MOST, MOST logo, MPLAB, OptoLyzer, PIC, PICSTART, PIC32 logo, RightTouch, SpyNIC, SST, SST Logo, SuperFlash and UNI/O are registered trademarks of Microchip Technology Incorporated in the U.S.A. and other countries.

ClockWorks, The Embedded Control Solutions Company, ETHERSYNCH, Hyper Speed Control, HyperLight Load, IntelliMOS, mTouch, Precision Edge, and QUIET-WIRE are registered trademarks of Microchip Technology Incorporated in the U.S.A.

Analog-for-the-Digital Age, Any Capacitor, AnyIn, AnyOut, BodyCom, chipKIT, chipKIT logo, CodeGuard, dsPICDEM, dsPICDEM.net, Dynamic Average Matching, DAM, ECAN, EtherGREEN, In-Circuit Serial Programming, ICSP, Inter-Chip Connectivity, JitterBlocker, KleerNet, KleerNet logo, MiWi, motorBench, MPASM, MPF, MPLAB Certified logo, MPLIB, MPLINK, MultiTRAK, NetDetach, Omniscient Code Generation, PICDEM, PICDEM.net, PICkit, PICtail, PureSilicon, RightTouch logo, REAL ICE, Ripple Blocker, Serial Quad I/O, SQI, SuperSwitcher, SuperSwitcher II, Total Endurance, TSHARC, USBCheck, VariSense, ViewSpan, WiperLock, Wireless DNA, and ZENA are trademarks of Microchip Technology Incorporated in the U.S.A. and other countries.

SQTP is a service mark of Microchip Technology Incorporated in the U.S.A.

Silicon Storage Technology is a registered trademark of Microchip Technology Inc. in other countries.

GestIC is a registered trademarks of Microchip Technology Germany II GmbH & Co. KG, a subsidiary of Microchip Technology Inc., in other countries.

All other trademarks mentioned herein are property of their respective companies.

© 2016, Microchip Technology Incorporated, Printed in the U.S.A., All Rights Reserved.

ISBN: 9781522409984

QUALITY MANAGEMENT SYSTEM
CERTIFIED BY DNV
═ ISO/TS 16949 ═

Microchip received ISO/TS-16949:2009 certification for its worldwide headquarters, design and wafer fabrication facilities in Chandler and Tempe, Arizona; Gresham, Oregon and design centers in California and India. The Company's quality system processes and procedures are for its PIC® MCUs and dsPIC® DSCs, KEELOQ® code hopping devices, Serial EEPROMs, microperipherals, nonvolatile memory and analog products. In addition, Microchip's quality system for the design and manufacture of development systems is ISO 9001:2000 certified.

© 2016 Microchip Technology Inc.

Object of Declaration: EVB-USB5807/6

EU Declaration of Conformity

Manufacturer: Microchip Technology Inc.
2355 W. Chandler Blvd.
Chandler, Arizona, 85224-6199
USA

This declaration of conformity is issued by the manufacturer.

The development/evaluation tool is designed to be used for research and development in a laboratory environment. This development/evaluation tool is not a Finished Appliance, nor is it intended for incorporation into Finished Appliances that are made commercially available as single functional units to end users under EU EMC Directive 2004/108/EC and as supported by the European Commission's Guide for the EMC Directive 2004/108/EC (8th February 2010).

This development/evaluation tool complies with EU RoHS2 Directive 2011/65/EU.

This development/evaluation tool, when incorporating wireless and radio-telecom functionality, is in compliance with the essential requirement and other relevant provisions of the R&TTE Directive 1999/5/EC and the FCC rules as stated in the declaration of conformity provided in the module datasheet and the module product page available at www.microchip.com.

For information regarding the exclusive, limited warranties applicable to Microchip products, please see Microchip's standard terms and conditions of sale, which are printed on our sales documentation and available at www.microchip.com.

Signed for and on behalf of Microchip Technology Inc. at Chandler, Arizona, USA

Derek Carlson
VP Development Tools

12-Sep-14
Date

© 2016 Microchip Technology Inc.

Table of Contents

Preface **5**
Introduction 5
Document Layout 5
Documentation Conventions 6
Warranty Registration 7
The Microchip Web Site 7
Customer Support 7
Document Revision History 7

Chapter 1. Overview
1.1 EVB-USB5807/6 Evaluation Kit Overview 8
1.2 Features 8
1.3 Block Diagram 9
1.4 References 9
1.5 Definitions 10

Chapter 2. Getting Started
2.1 Kit Contents 11
2.2 Getting Started 11
2.2.1 Quick Start 11
2.2.2 Differences between EVB-USB5807 and EVB-USB5806 12

Chapter 3. Hardware Configuration
3.1 Hardware Configuration Options 13
3.1.1 Configuration 14
3.1.2 Power Source - Self Powered 15
3.1.3 Downstream Port Control 15
3.1.4 EVB-USB5807/6 LED Indicators 16
3.1.5 EVB-USB5807/6 Switches 18
3.1.6 EVB-USB5807/6 Connector Descriptions 18
3.1.7 Test Points on EVB-USB5807/6 19

Appendix A. EVB-USB5807/6 Schematics
A.1 Introduction 21

Appendix B. EVB-USB5807/6 BOM
B.1 Introduction 26

Appendix C. USB5807/06 PCB Silk Screens
C.1 Introduction 31

Worldwide Sales and Service **33**

Preface

NOTICE TO CUSTOMERS

All documentation becomes dated, and this manual is no exception. Microchip tools and documentation are constantly evolving to meet customer needs, so some actual dialogs and/or tool descriptions may differ from those in this document. Please refer to our web site (www.microchip.com) to obtain the latest documentation available.

Documents are identified with a "DS" number. This number is located on the bottom of each page, in front of the page number. The numbering convention for the DS number is "DSXXXXXA", where "XXXXX" is the document number and "A" is the revision level of the document.

For the most up-to-date information on development tools, see the MPLAB® IDE online help. Select the Help menu, and then Topics to open a list of available online help files.

INTRODUCTION

This chapter contains general information that will be useful to know before using the EVB-USB5807/6 Evaluation Board User's Guide. Items discussed in this chapter include:

- Document Layout
- Documentation Conventions
- Warranty Registration
- The Microchip Web Site
- Customer Support
- Document Revision History

DOCUMENT LAYOUT

This document describes how to use the EVB-USB5807/6 as a demonstration platform optimized for portable applications. The manual layout is as follows:

- **Chapter 1. "Overview"**
- **Chapter 2. "Getting Started"** – Provides information about set-up and operation of the EVB-USB5807/6 Evaluation Board.
- **Chapter 3. "Hardware Configuration"** – Includes information about the hardware configuration of the EVB-USB5807/6 Evaluation Board.
- **Appendix A. "EVB-USB5807/6 Schematics"**
- **Appendix B. "EVB-USB5807/6 BOM"**
- **Appendix C. "USB5807/06 PCB Silk Screens"**

DOCUMENTATION CONVENTIONS

This manual uses the following documentation conventions:

DOCUMENTATION CONVENTIONS

Description	Represents	Examples
Arial font:		
Italic characters	Referenced books	*MPLAB® IDE User's Guide*
	Emphasized text	...is the *only* compiler...
Initial caps	A window	the Output window
	A dialog	the Settings dialog
	A menu selection	select Enable Programmer
Quotes	A field name in a window or dialog	"Save project before build"
Underlined, italic text with right angle bracket	A menu path	*File>Save*
Bold characters	A dialog button	Click **OK**
	A tab	Click the **Power** tab
N'Rnnnn	A number in verilog format, where N is the total number of digits, R is the radix and n is a digit.	4'b0010, 2'hF1
Text in angle brackets < >	A key on the keyboard	Press <Enter>, <F1>
Courier New font:		
Plain Courier New	Sample source code	`#define START`
	Filenames	`autoexec.bat`
	File paths	`c:\mcc18\h`
	Keywords	`_asm, _endasm, static`
	Command-line options	`-Opa+, -Opa-`
	Bit values	`0, 1`
	Constants	`0xFF, 'A'`
Italic Courier New	A variable argument	*`file`*`.o`, where *`file`* can be any valid filename
Square brackets [ ]	Optional arguments	`mcc18 [options]` *`file`* `[options]`
Curly brackets and pipe character: { | }	Choice of mutually exclusive arguments; an OR selection	`errorlevel {0|1}`
Ellipses...	Replaces repeated text	`var_name [, var_name...]`
	Represents code supplied by user	`void main (void) { ... }`

© 2016 Microchip Technology Inc.

WARRANTY REGISTRATION

Please complete the enclosed Warranty Registration Card and mail it promptly. Sending the Warranty Registration Card entitles users to receive new product updates. Interim software releases are available at the Microchip web site.

THE MICROCHIP WEB SITE

Microchip provides online support via our web site at www.microchip.com. This web site is used as a means to make files and information easily available to customers. Accessible by using your favorite Internet browser, the web site contains the following information:

- **Product Support** – Data sheets and errata, application notes and sample programs, design resources, user's guides and hardware support documents, latest software releases and archived software
- **General Technical Support** – Frequently Asked Questions (FAQs), technical support requests, online discussion groups, Microchip consultant program member listing
- **Business of Microchip** – Product selector and ordering guides, latest Microchip press releases, listing of seminars and events, listings of Microchip sales offices, distributors and factory representatives

CUSTOMER SUPPORT

Users of Microchip products can receive assistance through several channels:

- Distributor or Representative
- Local Sales Office
- Field Application Engineer (FAE)
- Technical Support

Customers should contact their distributor, representative or field application engineer (FAE) for support. Local sales offices are also available to help customers. A listing of sales offices and locations is included in the back of this document.

Technical support is available through the web site at:
http://www.microchip.com/support

DOCUMENT REVISION HISTORY

Revision	Section/Figure/Entry	Correction
DS50002543A (10-07-16)	Initial release of this document	

Chapter 1. Overview

1.1 EVB-USB5807/6 EVALUATION KIT OVERVIEW

The EVB-USB5807/6 is a demonstration and evaluation platform that provides the necessary requirements and interface options for evaluating the USB5807 or USB5806 (depending on PCB population options), a 7/6-Port SS/HS USB Smart Hub on a 4-layer RoHS-compliant Printed Circuit Board (PCB). This will allow the user to gain an understanding of the product and accelerate the integration of the USB5807/06 into the user's design. The EVB-USB5807/6 is compliant with the USB 3.1 (Gen1) Specification and supports SuperSpeed (SS), High-Speed (HS), Full-Speed (FS), and Low-Speed (LS) USB signaling for complete coverage of all defined USB operation speeds. The evaluation platform supports seven/six downstream ports that are USB 2.0 and USB 3.1 Gen 1 compliant. The EVB-USB5807/6 platform also supports battery charging on all downstream ports (maximum of 13A* at any one time). The EVB-USB5807/6 is configured for operation through internal default settings and supports custom configurations through SMBus or through the external 16-Mbit SPI Flash device, U2. The EVB-USB5807/6 demonstrates driver compatibility with Microsoft® Windows® 8x, Windows 7, Windows XP, Mac OS® X 10.4+, and Linux® hub drivers.

See **Section 1.2 "Features"** for more information.

Note:	*Requires a 12V, 85W supply.

1.2 FEATURES

- Microchip's FlexConnect, PortSwap, PHYBoost™, and VariSense™ technologies.
- USB5807/06 in a 100-pin QFN RoHS compliant package.
- USB 3.1 Gen 1 compliant (SS, HS, FS, and LS operation).
- USB pins are 5 V tolerant.
- Self powered operation.
- Seven downstream USB 2.0 / USB 3.1 Gen 1 ports for the USB5807 option, Six downstream USB 2.0 / USB 3.1 Gen 1 ports for the USB5806.
- All downstream ports support individual port power and overcurrent sense.
- All downstream ports can be enabled for battery charging with the battery charging select switch SW1. (BC1.2 or SE1, 2.1A max per port).
- Onboard SPI Flash for external downloadable firmware.
- Low-cost 4-layer space saving design.
- Operates from a single voltage (+12.0 V, regulated) external power supply.
- Onboard 25 MHz crystal or external clock input.
- Single onboard +5.2 V, 6 Amp regulator. MCP19035 based switching regulator design provides 5.2 V at up to 15 A when using a 12 V, 85 W supply.
- Single onboard +3.3 V, 0.5 Amp regulator.
- Single onboard +1.2 V, 2 Amp regulator.
- Port Power LED indicators.

- SPI Flash activity blue LED indicator.
- Reset red LED indicator.
- Green LED indicators for 5V, 3.3V, 1.2V supplies.
- Dual color LED USB Suspend indicator (green=run/yellow=suspend).
- USB Type-C upstream green LED charging capability indicators: 3A, 1.5A, Legacy.
- SMBus current monitor on each USB Type-C downstream port.
- Terminal block connector for use with an external bench supply.
- Removable/non-removable downstream ports can be configured with switch SW2.

1.3 BLOCK DIAGRAM

FIGURE 1-1: EVB-USB5807/6 BLOCK DIAGRAM

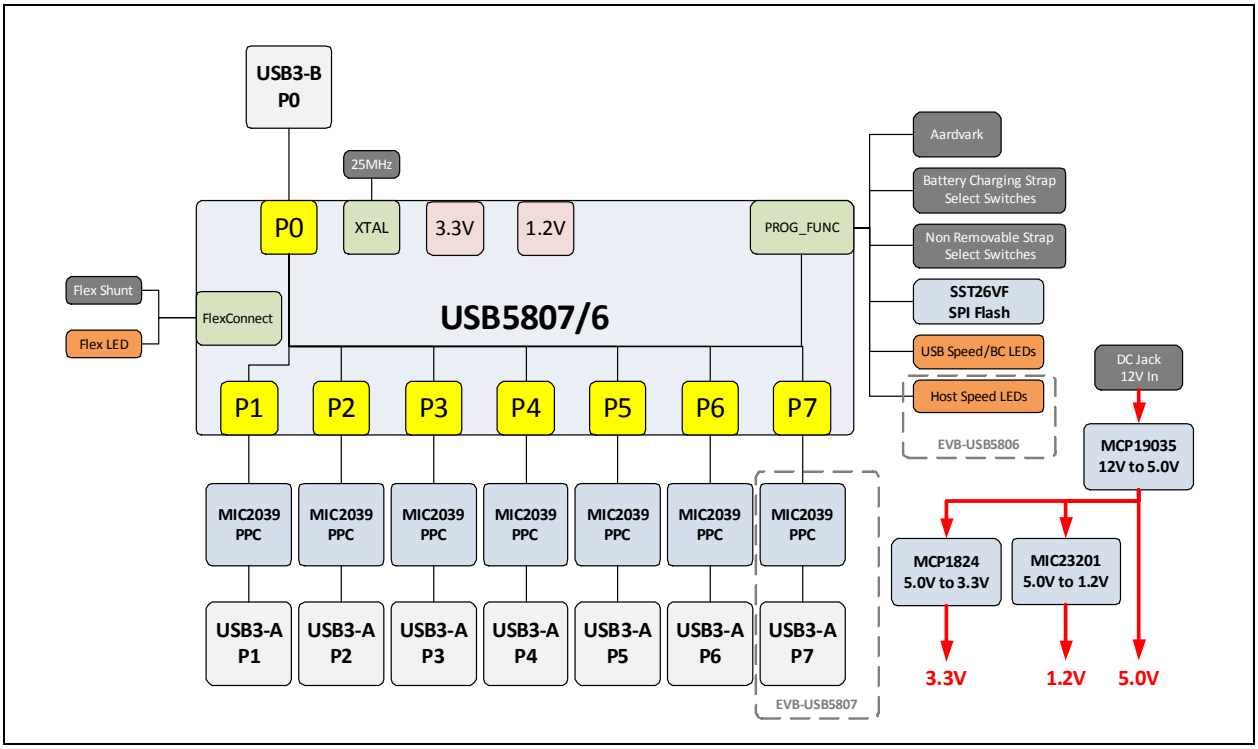

1.4 REFERENCES

- *USB5806 Data Sheet*
- *USB5807 Data Sheet*

1.5 DEFINITIONS

- **BC1.2** - Latest USB-IF specified USB battery charging standard
- **CDP** - Charging Downstream Port. A BC1.2 compliant port allows simultaneous USB data and USB charging.
- **DCP** - Dedicated Charging Port. A BC1.2 compliant port which is only capable of USB charging (no data).
- **DFP** - Downstream Facing Port
- **EVB** - Evaluation Board
- **FlexConnect** - Special feature which allows the USB Hub's upstream port to exchange roles with downstream port 1 via SMBus control, GPIO control, or USB command.
- **OTP** - One Time Programmable Memory
- **SDP** - Standard Downstream Port. A standard USB port with no high-current battery charging capabilities.
- **SE1** - Type of Battery Charging (non-USB compliant) which sets the USB D+/D- to specific DC voltages to communicate charging capability
- **UFP** - Upstream Facing Port
- **USB-IF** - USB Integrators Forum. Collection of corporate sponsored members responsible for developing USB specifications.

© 2016 Microchip Technology Inc.

Chapter 2. Getting Started

2.1 KIT CONTENTS

The EVB-USB5807/6 evaluation board includes the basic equipment necessary for evaluation. The items included are:

1. **EVB-USB5807/6 Evaluation Board**
2. **12V Power Supply**

2.2 GETTING STARTED

The Microchip EVB-USB5807/6 is designed for flexible configuration solutions. It can be configured via default internal register settings, downloadable external firmware to an onboard SPI Flash, through SMBus, or through the onboard configuration switches.

Microchip provides a comprehensive software programming tool, ProTouch2, for configuring USB5807/06 functions, registers, and OTP memory. When configured with the default internal register settings, the device operates as a USB 3.1 Gen 1 / USB 2.0 hub with 7 (for USB5807 option) or 6 (for USB5806 option) USB ports and Microchip's standard VID/PID/DID settings. For additional information on the Pro-Touch2 programming tool, refer to Software Libraries within Microchip USB5807/6 product page at www.microchip.com/USB5807 or www.microchip.com/USB5806

2.2.1 Quick Start

To quickly start using the board, perform the following steps:

1. Connect the included 12V power supply to the barrel connector on the EVB-USB5807/6(**J10**).
2. Using a standard USB cable, connect the EVB-USB5807/6 to a USB host via the USB Type-B Connector (**J1**).
3. You may now connect devices to any of the downstream ports to enumerate and use that device with the USB host.
4. You can perform additional configuration or evaluate specific features by launching the ProTouch2 software on your USB host or by manipulating the included hardware configuration options detailed in the next chapter.

2.2.2 Differences between EVB-USB5807 and EVB-USB5806

Differences between the USB5807 and USB5806 are summarized in the table below.

TABLE 2-1: EVB-USB5807 AND EVB-USB5806 QUICK FEATURE SET COMPARISON

Feature	USB5807	USB5806
Number of downstream ports	**7**	**6**
Battery Charging on all downstream ports	**Yes**	**Yes**
Internal Hub Feature Controller device	No	**Yes**
SMBus slave interface	**Yes**	**Yes**
USB to I^2C Master/SPI Master/GPIO bridging function	No	**Yes**
FlexConnect via GPIO control	**Yes**	**Yes**
FlexConnect via USB command	No	**Yes**
OTP programming via SMBus	**Yes**	**Yes**
OTP programming via USB command	No	**Yes**
Downstream port connection speed indicators (LED)	**Yes**	**Yes**
Upstream port connection speed indicator (LED)	**Yes**	No

© 2016 Microchip Technology Inc.

Chapter 3. Hardware Configuration

3.1 HARDWARE CONFIGURATION OPTIONS

FIGURE 3-1: EVB-USB5807 (TOP-SIDE)

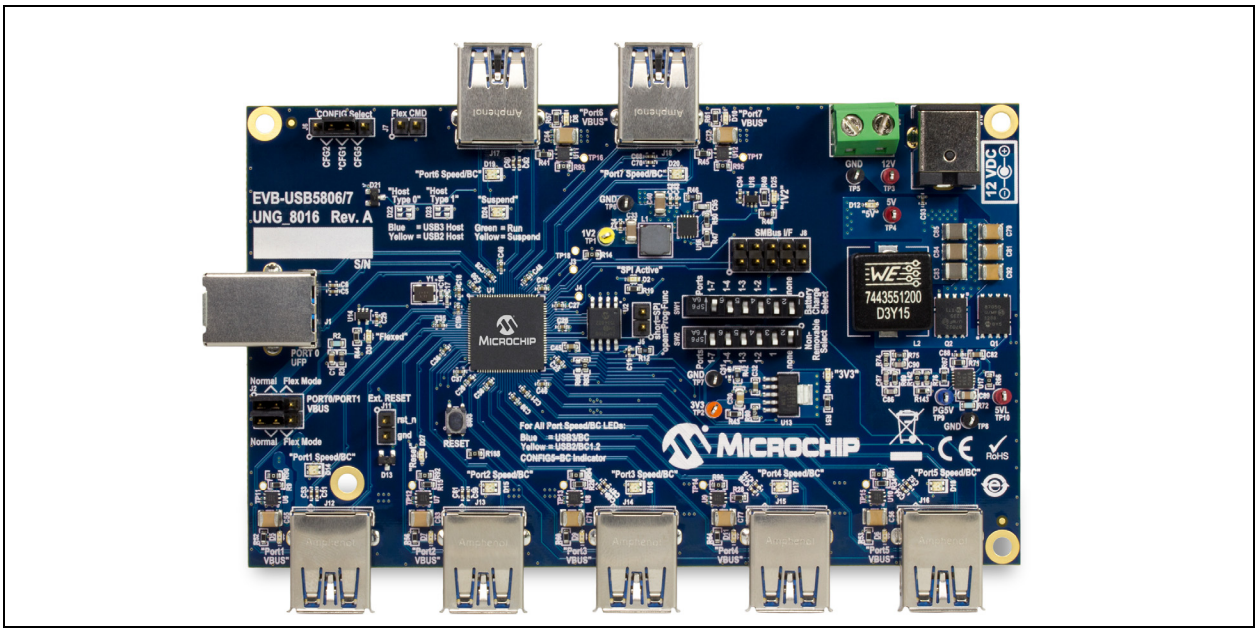

FIGURE 3-2: EVB-USB5806 (TOP-SIDE)

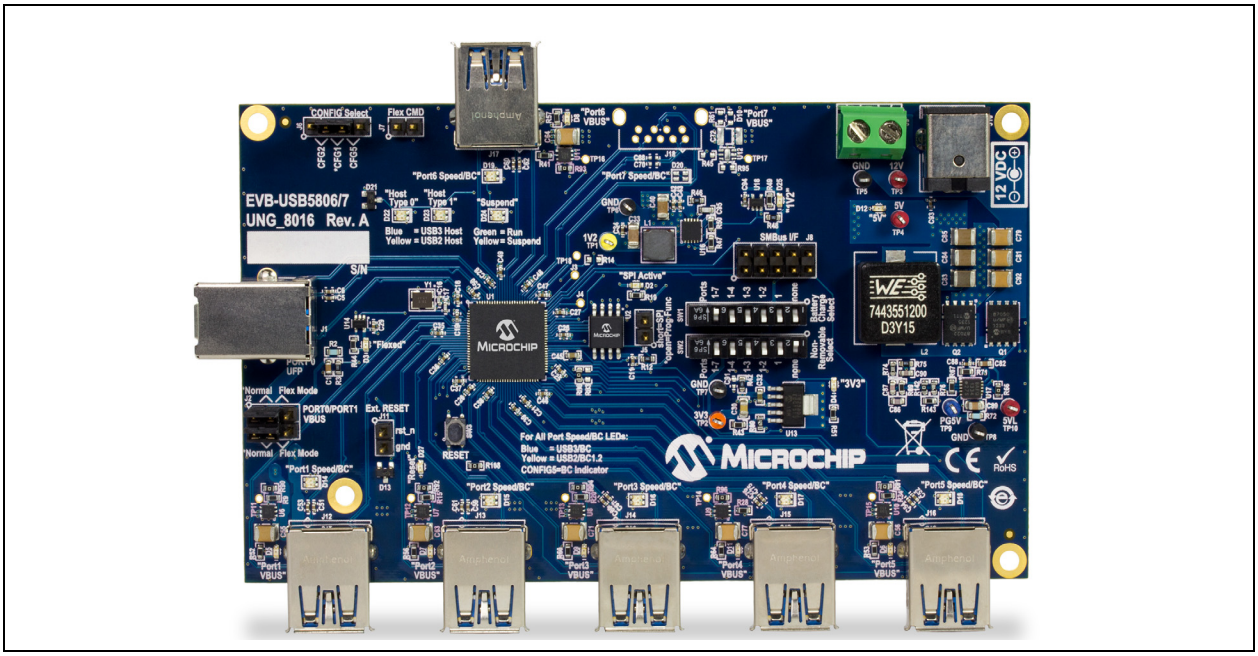

3.1.1 Configuration

3.1.1.1 EXTERNAL SPI FLASH

Upon power-up, the USB5807/06 first looks for an external SPI ROM device and a valid signature in the Flash. If one is found, the external ROM is enabled and code execution is initiated from the external SPI ROM device.

To select the SPI device, install a shunt to short **J5**. When code is executing from a SPI ROM device, a blue LED (**D2**) will illuminate.

Note 1: CFG_BC and CFG_Non-Rem options are deselected when a shunt is installed on **J5**. When operating SPI mode, all configuration is handled by the code executing from the SPI ROM device.

2: If the SPI Flash is not properly programmed or has an invalid signature, the USB5807/06 will revert to internal defaults even if the SPI ROM is selected.

3.1.1.2 SMBUS

If a SPI Flash device is not found, the firmware checks if SMBus is enabled.

To select SMBus configuration, leave **J5** open to disconnect the SPI ROM and select the CONFIG2 option from the CFG_STRAP header by shunting pins 1-2 of **J6**. The SMBus signals may be accessed at **J8**, pins 1 and 3.

Remember, if configured for SMBus operation, the USB5807/06 will wait indefinitely for data from the SMBus interface and will not enumerate to the USB host until the special USB Attach command is sent.

3.1.1.3 INTERNAL DEFAULT CONFIGURATIONS WITH STRAPPING OPTIONS

When the USB5807/06 does not detect a valid SPI Flash image or SMBus configuration upon power-up, the USB5807/06 uses internal default register settings. It also sets the Vendor ID, Product ID, Language ID, and Device ID, and additional settings from internal ROM code.

If configuration is not performed through SPI or SMBus, additional configuration is available through three functions: CFG_STRAP, CFG_BC_EN and CFG_NON-REM. The controls are configured by selecting on of six resistor values for each pin. These straps are read by the USB5807/06 device at power-on to determine the default configuration of the device.

To select the configuration mode, a shunt must be installed to short two pins of the **J6** header.

TABLE 3-1: CFG_SEL (J6) OPTIONS

Shunt Position	Configuration
Pins 1-2	CFG2 - Speed Indicator Mode + SMBus Slave Mode
Pins 2-3	CFG1 - Speed Indicator Mode + I^2C Bridging Mode [Default]
Pins 3-4	CFG5 - GPIO Mode + I^2C Bridging Mode

To use the battery charging and non-removable port strapping options, leave **J5** open. Select the desired CFG_BC_EN and CFG_NON-REM options by enabling only one position for each of the CFG_BC_EN Select and CFG_NON-REM Select switches (**SW1** and **SW2**).

© 2016 Microchip Technology Inc.

TABLE 3-2: BATTERY CHARGING OPTIONS (CFG_BC_EN - SW1)

Switch Position	Configuration
1	No battery charging enabled
2	Port 1 is BC1.2 enabled
3	Ports 1-2 are BC1.2 enabled
4	Ports 1-3 are BC1.2 enabled
5	Ports 1-4 are BC1.2 enabled
6	All ports are BC1.2 enabled [Default]

TABLE 3-3: NON-REMOVABLE PORT OPTIONS (CFG_NON-REM - SW2)

Switch Position	Configuration
1	All ports are removable [Default]
2	Port 1 is non-removable
3	Ports 1-2 are non-removable
4	Ports 1-3 are non-removable
5	Ports 1-4 are non-removable
6	All ports are non-removable

3.1.2 Power Source - Self Powered

The EVB-USB5807/6 only supports self-powered operation, and is powered through one +12.0 V regulated 'wall wart' external power supply. The power supply plugs into the 2.5 mm connector J9 on the board. Alternatively, an external voltage can be supplied to the screw terminal TERM_BLOCK_2P (**J9**) or test point **TP3**. The +12.0 V feeds a 15 A regulator which outputs +5.2 V across the board. This +5.2 V output supplies the +3.3 V and +1.2 V onboard regulators.

Note: The supplied 12.0 V external power supply cannot support simultaneous battery charging on all downstream ports. Use a higher power supply if the required test use case exceeds the power capability of the supply. Failure to heed to this warning could result in damage to the 12.0 V external power supply.

3.1.3 Downstream Port Control

USB power to the seven downstream ports is controlled via port power controllers with auto-discharge function. This provides up to 2.1 A of USB battery charging power to each port.

3.1.4 EVB-USB5807/6 LED Indicators

Table 3-4 describes the LED indicators included on the EVB-USB5807/6.

TABLE 3-4: LED INDICATOR DESCRIPTIONS

REF. DES.	Label	Description
D2	"SPI Flash Active"	Indicates that the SPI ROM is being accessed (connects to the Chip Enable pin).
D3	"Flexed"	Illuminates when the USB5807/06 hub is in the Flexed state.
D4	"3V3"	Indicates that the output of the 3.3V regulator is operational.
D5	"Port1 VBUS"	Illuminates when 5V to downstream port 1 VBUS is present.
D6	"Port5 VBUS"	Illuminates when 5V to downstream port 5 VBUS is present.
D7	"Port2 VBUS"	Illuminates when 5V to downstream port 2 VBUS is present.
D8	"Port6 VBUS"	Illuminates when 5V to downstream port 6 VBUS is present.
D9	"Port3 VBUS"	Illuminates when 5V to downstream port 3 VBUS is present.
D10	"Port7 VBUS"	Illuminates when 5V to downstream port 7 VBUS is present (EVB-USB5807 only).
D11	"Port4 VBUS"	Illuminates when 5V to downstream port 4 VBUS is present.
D12	"5V"	Indicates that the output of the 5.2V regulator is operational.
D14	"Port1 Speed/BC"	In CONFIG1/CONFIG2 Modes: Indicates downstream port 1 connection speed. - Off: No Connection - Blue: USB3 - Yellow: USB2 In CONFIG5 Mode: Indicates state of GPIO70. - Off: Tri-state - Blue: USB3 - Yellow: USB2
D15	"Port2 Speed/BC"	In CONFIG1/CONFIG2 Modes: Indicates downstream port 2 connection speed. - Off: No Connection - Blue: USB3 - Yellow: USB2 In CONFIG5 Mode, Indicates state of GPIO71. - Off: Tri-state - Blue: USB3 - Yellow: USB2
D16	"Port3 Speed/BC"	In CONFIG1/CONFIG2 Modes: Indicates downstream port 3 connection speed. - Off: No Connection - Blue: USB3 - Yellow: USB2 In CONFIG5 Mode, Indicates state of GPIO2. - Off: Tri-state - Blue: USB3 - Yellow: USB2

© 2016 Microchip Technology Inc.

TABLE 3-4: LED INDICATOR DESCRIPTIONS (CONTINUED)

REF. DES.	Label	Description
D17	“Port4 Speed/BC”	In CONFIG1/CONFIG2 Modes: Indicates downstream port 4 connection speed. - Off: No Connection - Blue: USB3 - Yellow: USB2 In CONFIG5 Mode, Indicates state of GPIO3. - Off: Tri-state - Blue: USB3 - Yellow: USB2
D18	“Port5 Speed/BC”	In CONFIG1/CONFIG2 Modes: Indicates downstream port 5 connection speed. - Off: No Connection - Blue: USB3 - Yellow: USB2 In CONFIG5 Mode, Indicates state of GPIO65. - Off: Tri-state - Blue: USB3 - Yellow: USB2
D19	“Port6 Speed/BC”	In CONFIG1/CONFIG2 Modes: Indicates downstream port 6 connection speed. - Off: No Connection - Blue: USB3 - Yellow: USB2 In CONFIG5 Mode, Indicates state of GPIO66. - Off: Tri-state - Blue: USB3 - Yellow: USB2
D20	“Port7 Speed/BC”	**USB5807 Only.** In CONFIG1/CONFIG2 Modes: Indicates downstream port 7 connection speed. - Off: No Connection - Blue: USB3 - Yellow: USB2 In CONFIG5 Mode, Indicates state of GPIO23. - Off: Tri-state - Blue: USB3 - Yellow: USB2
D22	“Host Type 0”	**USB5806 Only.** Indicates the connection speed of the upstream port when the hub is not flexed. - Off: No Connection - Blue: USB3 - Yellow: USB2

TABLE 3-4: LED INDICATOR DESCRIPTIONS (CONTINUED)

REF. DES.	Label	Description
D23	"Host Type 1"	**USB5806 Only.** Indicates the connection speed of the upstream port when the hub is flexed. - Off: No Connection - Blue: USB3 - Yellow: USB2
D24	"Suspend"	Indicates the state of the hub. - Off: Unconfigured - Green: Normal Operation (Running) - Yellow: Suspended
D25	"1V2"	Indicates that the output of the 1.2V regulator is operational.
D27	"RESET"	Illuminates when the USB5807/06 hub is being reset via the RESET_N pin (SW3 button press).

3.1.5 EVB-USB5807/6 Switches

Table 3-5 describes the switches included on the EVB-USB5807/6.

TABLE 3-5: SWITCH DESCRIPTIONS

REF. DES.	Label	Description
SW1	Battery Charging Select	6-position SIP SPST switch. Selects one of the 6 battery charging strapping options. [Default = all ports battery charging enabled]
SW2	Non-Removable Select	6-position SIP SPST switch. Selects one of the 6 non-removable port strapping options. [Default = all ports non-removable]
SW3	External Reset	Momentary Push-button switch to reset hub.

3.1.6 EVB-USB5807/6 Connector Descriptions

Table 3-6 describes the connectors included on the PCB.

TABLE 3-6: EVB-USB5807/6 CONNECTOR DESCRIPTIONS

REF. DES.	Type	Label	Description
J1	USB3.1 Type-B	Port 0	Upstream USB connection (to USB host).
J2	2x3 Header	PORT0/PORT1 VBUS - Normal/Flex Mode	Routes VBUS connections according to Flex-State. When hub is not flexed, install shunts between [1-2] and [4-5]. When hub is flexed, install shunts between [2-3] and [5-6].
J3	1-Pin Header	-	Test Point for PROG_FUNC0 pin.
J4	1-Pin Header	-	Test Point for PROG_FUNC1 pin.
J5	1x2 Header	-	Install a shunt to connect the SPI ROM to the hub.

© 2016 Microchip Technology Inc.

TABLE 3-6: EVB-USB5807/6 CONNECTOR DESCRIPTIONS (CONTINUED)

REF. DES.	Type	Label	Description
J6	1x4 Header	CONFIG Select	Selects the configuration Mode. A shunt must be installed between 2 pins. [1-2] - CONFIG2 Mode [2-3] - CONFIG1 Mode [3-4] - CONFIG5 Mode No Shunt - Not Allowed
J7	1x2 Header	FLEX CMD	Install a shunt to force the hub into the flexed state.
J8	2x5 Header	Aardvark	SMBus connection compatible with “Aardvark” I^2C/SPI Host Device”.
J9	2-pin Terminal Block	12V	Connection point for using lab bench 12 V power supply to power board.
J10	BC Barrel Jack	12V	Connection point for DC 12V power supply.
J11	1x2 Header	External Reset	Install a shunt to permanently hold hub in the reset state.
J12	USB3 Type-A Connector	PORT1	Downstream port 1 USB connection.
J13	USB3 Type-A Connector	PORT2	Downstream port 2 USB connection.
J14	USB3 Type-A Connector	PORT3	Downstream port 3 USB connection.
J15	USB3 Type-A Connector	PORT4	Downstream port 4 USB connection.
J16	USB3 Type-A Connector	PORT5	Downstream port 5 USB connection.
J17	USB3 Type-A Connector	PORT6	Downstream port 6 USB connection.
J18	USB3 Type-A Connector	PORT7	Downstream port 7 USB connection.

3.1.7 Test Points on EVB-USB5807/6

Table 3-7 describes the test points included on the EVB-USB5807/6. A header may be permanently installed on the through-hole test points if needed.

TABLE 3-7: EVB-USB5807/6 TEST POINT DESCRIPTIONS

REF. DES.	Type	Description
TP1	Test Loop (Yellow)	1.2V regulator probe point.
TP2	Test Loop (Orange)	3.3V regulator probe point.
TP3	Test Loop (Red)	12V input probe point.
TP4	Test Loop (Red)	5V regulator probe point.
TP5	Test Loop (Black)	Ground probe point.
TP6	Test Loop (Black)	Ground probe point.

© 2016 Microchip Technology Inc.

TABLE 3-7: EVB-USB5807/6 TEST POINT DESCRIPTIONS

REF. DES.	Type	Description
TP7	Test Loop (Black)	Ground probe point.
TP8	Test Loop (Black)	Ground probe point.
TP9	Test Loop (Blue)	5.2V Switcher probe point for PWRGD pin (pin 6).
TP10	Test Loop (Red	5.2V Switcher probe point for +VCC pin (pin 5).
TP11	Test Pad	PRTCTL1 (from hub) signal probe point.
TP12	Test Pad	PRTCTL2 (from hub) signal probe point.
TP13	Test Pad	PRTCTL3 (from hub) signal probe point.
TP14	Test Pad	PRTCTL4 (from hub) signal probe point.
TP15	Test Pad	PRTCTL5 (from hub) signal probe point.
TP16	Test Pad	PRTCTL6 (from hub) signal probe point.
TP17	Test Pad	**USB5807 Only.** PRTCTL7 (from hub) signal probe point.
TP18	Test Pad	PROG_FUNC12 (from hub) signal probe point.

© 2016 Microchip Technology Inc.

Appendix A. EVB-USB5807/6 Schematics

A.1 INTRODUCTION

This appendix shows the EVB-USB5807/6 Evaluation Board Schematic.

FIGURE A-1: EVB-USB5807/6 EVALUATION BOARD SCHEMATICS

Table of Contents

Sheet	Description
1	Table of Contents, Revision History, Block Diagram
2	USB580x, SST26VF SPI Flash, Port Controllers, DC Regulators
3	USB3-A Downstream Ports
4	MCP19035 12V to 5V DC-DC Converter

Revision History

Revision	Date	Revision Summary	Author
A	02-26-2016	Release to manufacturing	A. Cruz

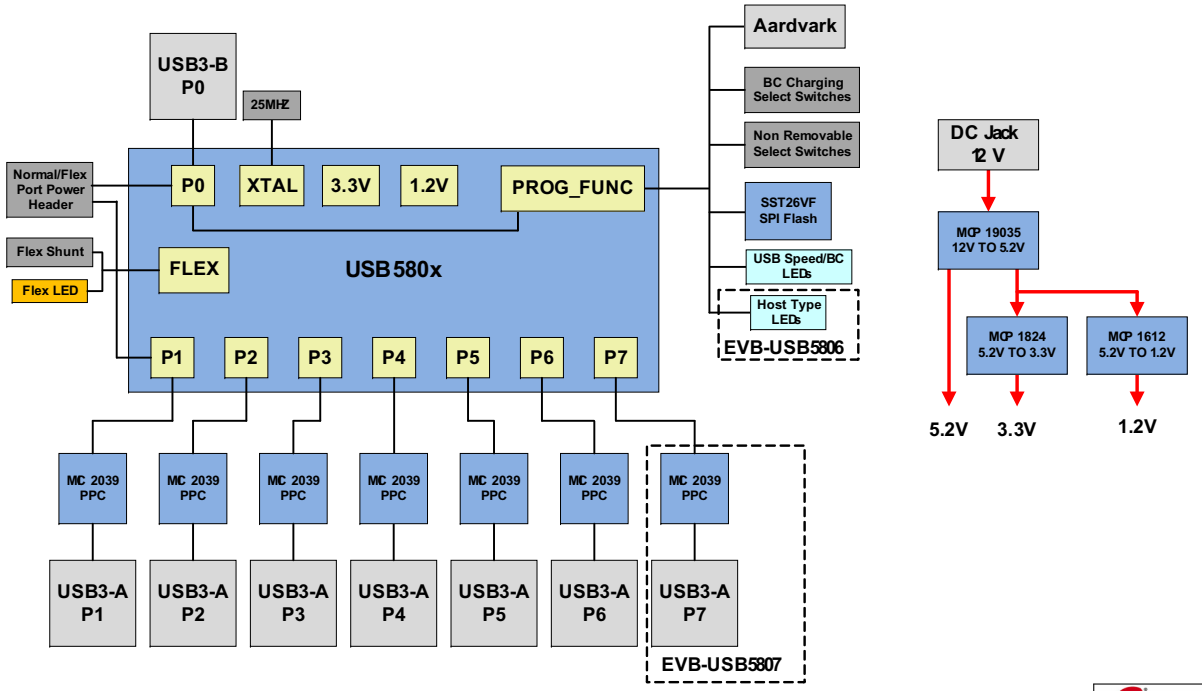

Microchip Technology, Inc.
USB/Network Group - UNG
www.Microchip.com

Designed with Altium

Description: Elbrus Evaluation Board 1	Variant: EVB-USB5807	
Page Title: Table of Contents, Revision History, Block Diagram		
Project Name: EVB-USB580x	PN: UNG_8016	
Size: B	Date: 3/10/2016	Designer: Arnaldo Cruz	Sheet 1 of 4	Rev A

© 2016 Microchip Technology Inc.

© 2016 Microchip Technology Inc.

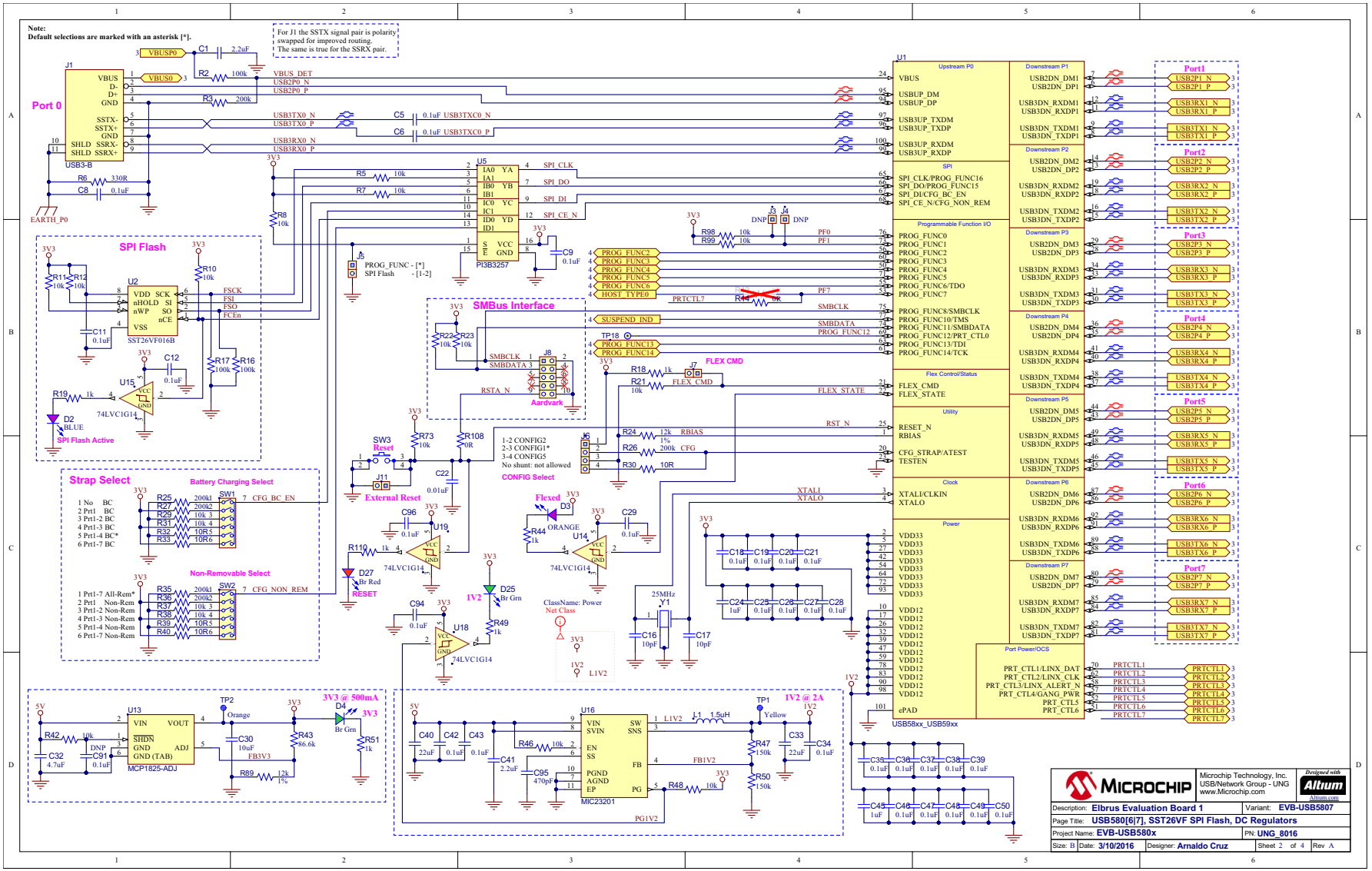

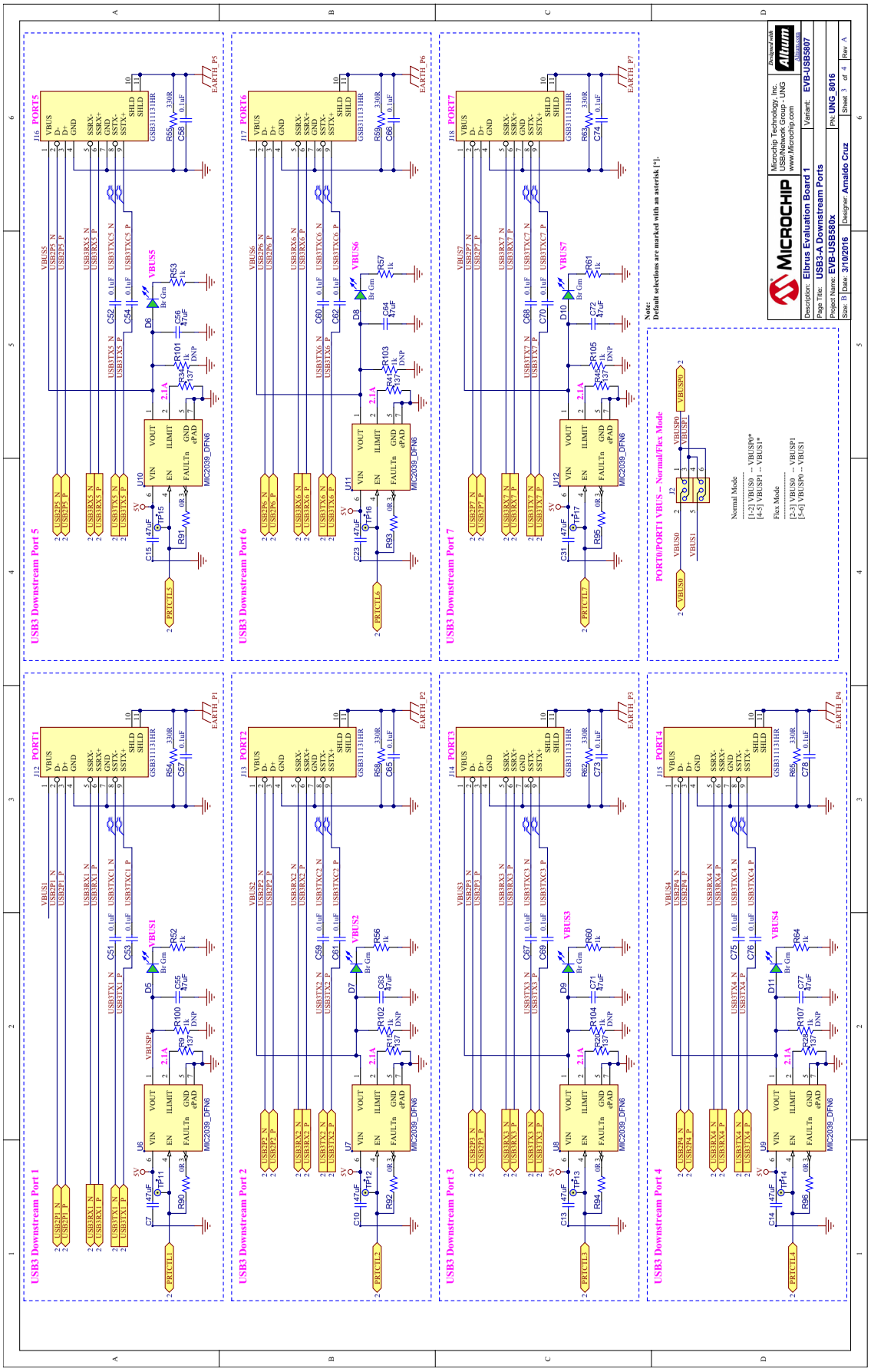

© 2016 Microchip Technology Inc.

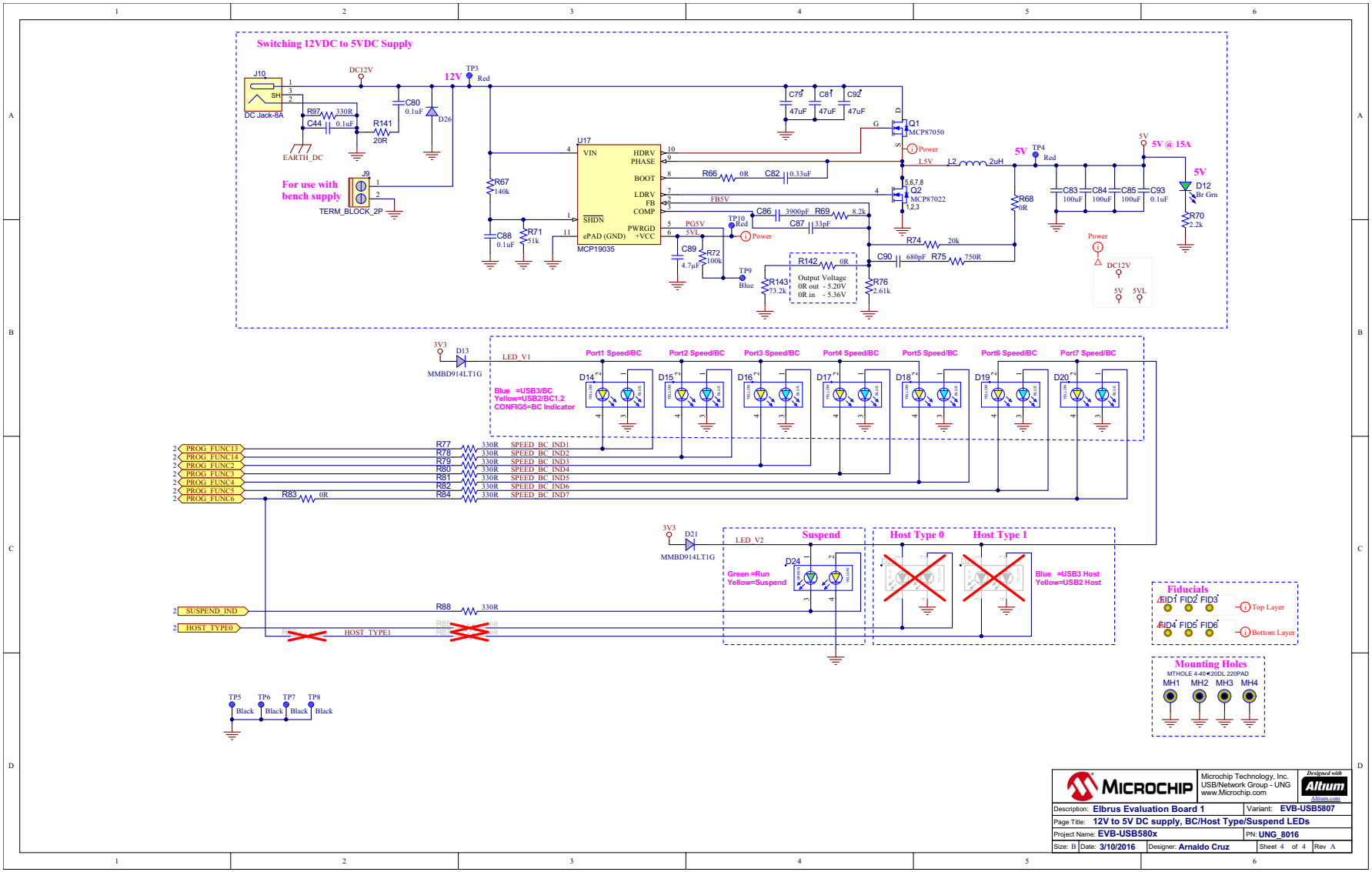

© 2016 Microchip Technology Inc.

Appendix B. EVB-USB5807/6 BOM

B.1 INTRODUCTION

This appendix shows the EVB-USB5807/6 Evaluation Bill of Materials.

Item	Qty	Reference Designator(s)	Description	Manufacturer	Manufacturer Part Number
1	2	C1, C41	CAP CER 2.2uF 10V 10% X7R SMD 0603	Murata	GRM188R71A225KE15D
2	55	C5, C6, C8, C9, C11, C12, C18, C19, C20, C21, C25, C26, C27, C28, C29, C34, C35, C36, C37, C38, C39, C42, C43, C44, C46, C47, C48, C49, C50, C51, C52, C53, C54, C57, C58, C59, C60, C61, C62, C65, C66, C67, C68, C69, C70, C73, C74, C75, C76, C78, C80, C88, C93, C94, C96	CAP CER 0.1uF 16V 10% X7R SMD 0402	Murata	GRM155R71C104KA88D
3	17	C7, C10, C13, C14, C15, C23, C31, C55, C56, C63, C64, C71, C72, C77, C79, C81, C92	Capacitor, 47uF, 16V, 10%, X5R, 1210	Murata	GRM32ER61C476KE15K
4	2	C16, C17	CAP CER 10pF 50V 5% NP0 SMD 0402	Murata	GRM1555C1H100JZ01D
5	1	C22	CAP CER 0.01uF 50V 20% X7R SMD 0603	KEMET	C0603C103M5RAC
6	2	C24, C45	CAP CER 1uF 6.3V 10% X5R SMD 0603	Panasonic	ECJ-1VB0J105K
7	1	C30	CAP CER 10uF 16V 10% X5R SMD 0805	Murata	GRM21BR61C106KE15L
8	1	C32	CAP CER 4.7uF 10V 10% X5R SMD 0603	Taiyo Yuden	LMK107BJ475KA-T
9	2	C33, C40	CAP CER 22uF 10V 10% X7R SMD 1206	Samsung Electro-Mechan	CL31B226KPHNNNE
10	1	C82	CAP CER 0.33uF 16V 10% X7R SMD 0603	Murata	GRM188R71C334KA01D
11	3	C83, C84, C85	CAP CER 100uF 10V 20% X5R SMD 1210	Taiyo Yuden	LMK325BJ107MM-T
12	1	C86	CAP CER 3900pF 50V 5% C0G SMD 0603	TDK	C1608C0G1H392J080AA
13	1	C87	CAP CER 33pF 50V 5% NP0 SMD 0603	Cal-Chip	GMC10CG330J50NTLF
14	1	C89	CAP CER 4.7UF 50V 0805	Samsung Electro-Mechan	CL21A475KBQNNNE
15	1	C90	CAP CER 680pF 50V 5% NP0 SMD 0603	Panasonic	ECJ-1VC1H681J
16	1	C91	CAP CER 0.1uF 16V 10% X7R SMD 0402	Murata	GRM155R71C104KA88D
17	1	C95	CAP CER 470pF 25V 5% NP0 SMD 0603	AVX	06033A471JAT2A
18	1	D2	DIO LED BLUE 2.8V 20mA 15mcd Clear SMD 0603	Lite-On	LTST-C193TBKT-5A
19	1	D3	DIO LED ORANGE 2V 30mA 90mcd Clear SMD 0603	Lite-On	LTST-C190KFKT

© 2016 Microchip Technology Inc.

20	9	D4, D5, D6, D7, D8, D9, D10, D11, D25	LED, Bright Green, 0603	Lite-On	LTST-C191KGKT
21	1	D12	LED, Bright Green, 0603	Lite-On	LTST-C191KGKT
22	2	D13, D21	Diode, MMBD914LT, Fast Switching, 100VDC, 200mA, SOT-23	ON Semiconductor	MMBD914LT1G
23	7	D14, D15, D16, D17, D18, D19, D20	DIO LED BLUE, YELLOW 2.9V, 2.0V 5mA 0605	Lite-On	LTST-C195TBKSKT-5A
24	1	D24	DIO LED DUAL, GREEN/YELLOW 2.0V, 2.0V 5mA 0605	Lite-On	LTST-C195KGJSKT
25	1	D26	DIODE SWITCHING 75V 0.2A SOT-23	Diodes Inc.	MMBD914-7-F
26	1	D27	LED, Bright Red, 0603	Lite-On	LTST-C191KRKT
27	1	J1	USB 3.1 RCPT TYPE B R/A TH	Amphenol Commercial Pr	GSB4211311WEU
28	1	J2	CON HDR 2.54MM MALE 3x2 TH GOLD 5.84MH TH VERT	SAMTEC	TSW-102-07-G-T
29	2	J3, J4	CONN HEADER 1POS .100" SGL GOLD	Samtec	TSW-101-07-G-S
30	3	J5, J7, J11	CONN HEADER 2POS .100" SGL GOLD	Samtec	TSW-102-07-G-S
31	1	J6	CON HDR-2.54 MALE 1x4 GOLD 5.84MH TH VERT	Samtec Inc	TSW-104-07-G-S
32	1	J8	HDR 10POS .100" SGL GOLD	Samtec Inc.	TSW-105-07-G-D
33	1	J9	Terminal Block 5.0MM PCB MOUNT 2P	TE Connectivity	282836-2
34	1	J10	CONN PWR JACK 2.5X6.5MM, 8A	CUI Inc	PJ-063BH
35	7	J12, J13, J14, J15, J16, J17, J18	CON USB 3.0 STD-A RCPT TH R/A	Amphenol Commercial Pr	GSB311131HR
36	1	L1	Power Inductor 1.5uH 30% 3A, 24mOhms	Murata Electronics	LQH5BPN1R5NT0L
37	1	L2	Power Inductor 2 uH 20% 23A, 2.6mOhms	Wurth Electronics	7443551200
38	1	Q1	MCHP ANALOG MOSFET N-CH 25V 100A 0.006R MCP87050-U/MF PDFN-8	Microchip	MCP87050T-U/MF
39	1	Q2	MCHP ANALOG MOSFET N-CH 25V 100A 0.0026R MCP87022T-U/MF PDFN-8	Microchip Technology	MCP87022T-U/MF
40	4	R2, R16, R17, R72	RES TF 100k 1% 1/8W SMD 0603	Vishay	MCT06030C1003FP500
41	6	R3, R25, R26, R27, R35, R36	RES TKF 200k 1% 1/10W SMD 0603	Vishay	CRCW0603200KFKEA
42	19	R5, R7, R8, R10, R11, R12, R21, R22, R23, R29, R31, R37, R38, R42, R46, R48, R73, R98, R99	RES TKF 10k 1% 1/10W SMD 0603	Vishay	CRCW060310K0FKEA
43	17	R6, R54, R55, R58, R59, R62, R63, R65, R77, R78, R79, R80, R81, R82, R84, R88, R97	RES TKF 330R 1% 1/10W SMD 0603	Panasonic	ERJ-3EKF3300V
44	7	R9, R15, R20, R28, R34, R41, R45	RES 137R 1% 1/10W 0603	Panasonic Electronic Com	ERJ-3EKF1370V

© 2016 Microchip Technology Inc.

45	13	R14, R66, R68, R83, R90, R91, R92, R93, R94, R95, R96, R108, R142	RES TKF 0R 1/10W SMD 0603	NIC Components	NRC06Z0TRF
46	13	R18, R19, R44, R49, R51, R52, R53, R56, R57, R60, R61, R64, R110	RES TKF 1k 1% 1/10W SMD 0603	Panasonic	ERJ-3EKF1001V
47	2	R24, R89	RES TKF 12k 1% 1/10W SMD 0603	Yageo	RC0603FR-0712KL
48	5	R30, R32, R33, R39, R40	RES TKF 10R 1% 1/10W SMD 0603	Panasonic	ERJ-3EKF10R0V
49	1	R43	RES TKF 86.6K 1% 1/10W SMD 0603	Pansonic Electronic Comp	ERJ-3EKF8662V
50	2	R47, R50	RES TKF 150k 1% 1/10W SMD 0603	Panasonic	ERJ-3EKF1503V
51	1	R67	RES TKF 140k 1% 1/10W SMD 0603	Panasonic	ERJ-3EKF1403V
52	1	R69	RES TKF 8.2k 1% 1/10W SMD 0603	Panasonic	ERJ-3EKF8201V
53	1	R70	RES TKF 2.2k 1% 1/10W SMD 0603	Panasonic	ERJ-3EKF2201V
54	1	R71	RES TKF 51k 1% 1/10W SMD 0603	Panasonic	ERJ-3EKF5102V
55	1	R74	RES TKF 20k 1% 1/10W SMD 0603	Yageo	9C06031A2002FKHFT
56	1	R75	RES TKF 750R 1% 1/10W SMD 0603	Vishay	CRCW0603750RFKEA
57	1	R76	RES TKF 2.61k 1% 1/16W SMD 0603	MULTICOMP	MC 0.063W 0603 1% 2K61
58	7	R100, R101, R102, R103, R104, R105, R107	RES TKF 1k 1% 1/10W SMD 0603	Panasonic	ERJ-3EKF1001V
59	1	R141	RES TKF 20R 1% 1/10W SMD 0603	Panasonic	ERJ-3EKF20R0V
60	1	R143	RES TKF 73.2k 1% 1/10W SMD 0603	Panasonic	ERJ-3EKF7322V
61	2	SW1, SW2	Switch SIP SPST 6POS Vertical, Unshielded, 20V	C&K Components	SPA06B
62	1	SW3	SWITCH TACTILE SPST-NO 0.05A 16V	C&K Components	CKN10502CT-ND
63	1	TP1	TEST POINT PC MINI .040"D YELLOW	Keystone Electronics	5004
64	1	TP2	TEST POINT PC MINI .040"D ORANGE	Keystone Electronics	5003
65	3	TP3, TP4, TP10	TEST POINT PC MINI .040"D RED	Keystone Electronics	5000
66	4	TP5, TP6, TP7, TP8	TEST POINT PC MINI .040"D BLACK	Keystone Electronics	5001
67	1	TP9	TEST POINT PC MINIATURE T/H BLUE	Keystone Electronics	5117
68	1	U1	IC, USB58xx, USB59xx, 7 Port USB 3.1 Gen1 Hub, QFN100	Microchip Technology	USB58xx_USB59xx
69	1	U2	Flash Serial, SPI, 2.7-3.6V, x1/x2/x4, SOIC8	Microchip Technology	SST26VF016B-104I/SM
70	1	U5	Quad, 2:1 Mux/Demux FET BusSwitch	Pericom	PI3B3257QE
71	7	U6, U7, U8, U9, U10, U11, U12	USB Switch ICs ADJ, High-Side, Power Distribution Switch, DFN-6 pkg	Micrel	MIC2039AYMT
72	1	U13	IC, LDO ADJ, 2.3 to 6Vin, 0.8V to 5V out, 0.5A	Microchip Technology	MCP1825T-ADJE/DC

© 2016 Microchip Technology Inc.

73	4	U14, U15, U18, U19	IC BUFF 74LVC1G14SE-7 SNGL SOT-553	Diodes Incorporated	74LVC1G14SE-7
74	1	U16	IC, 2.7V to 5.5V input, 2A, Synchronous 2MHz Buck Regulator	Microchip Technology (Mi	MIC23201YML
75	1	U17	IC, 4.5V to 30V input, 20A, 600kHz Buck Controller, power good signal	Microchip Technology	MCP19035BAABE/MF
76	1	Y1	Crystal 25MHz 4 pins 3225	ABRACON	ABM8G-25.000MHZ-B4Y-T

© 2016 Microchip Technology Inc.

Appendix C. USB5807/06 PCB Silk Screens

C.1 INTRODUCTION

This appendix shows the USB5807/06 Top and Bottom Silk Screen Images.

FIGURE C-1: USB5807/06 TOP AND BOTTOM SILK SCREEN IMAGES

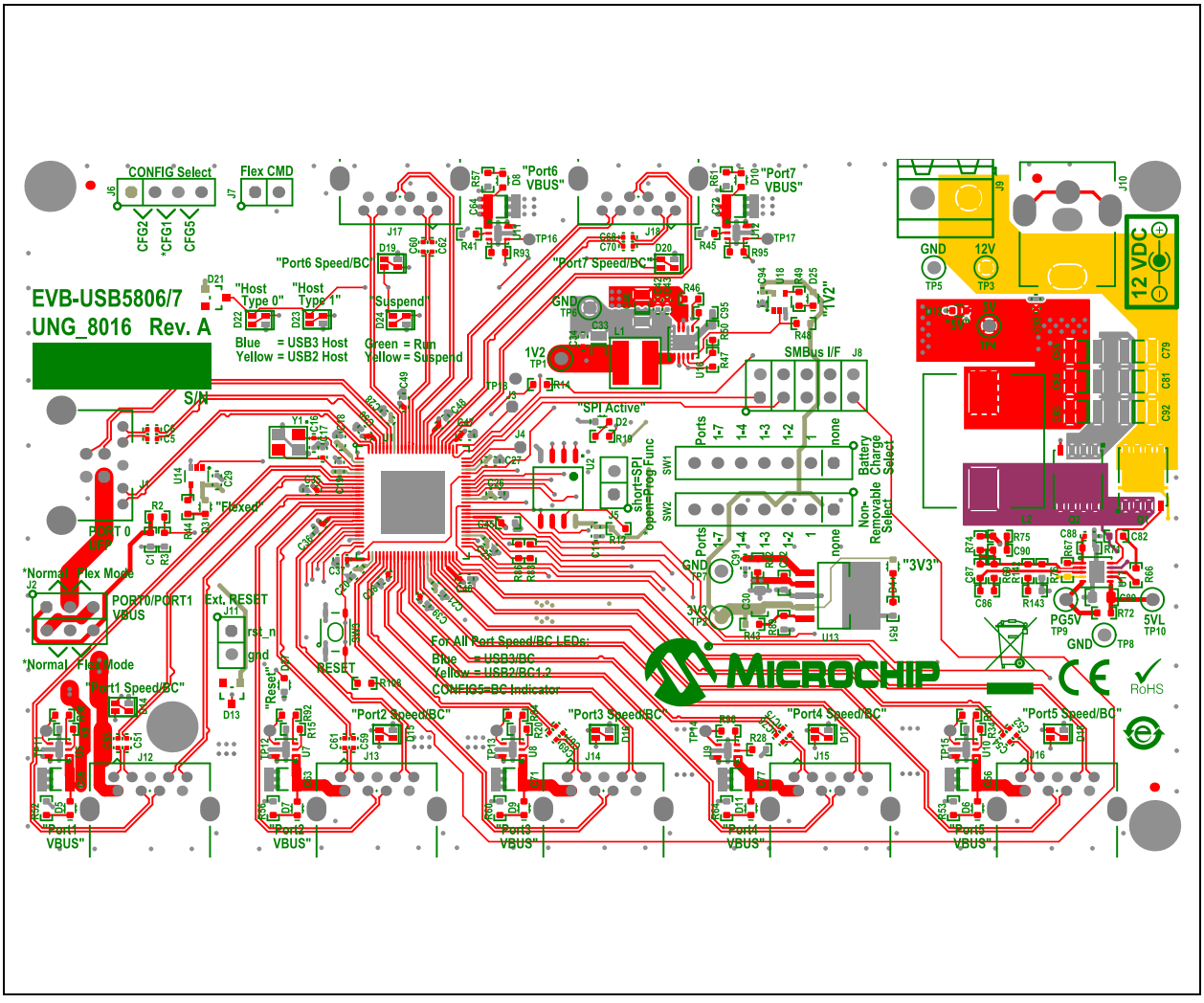

FIGURE C-2: USB5807/06 BOTTOM SILK SCREEN IMAGE

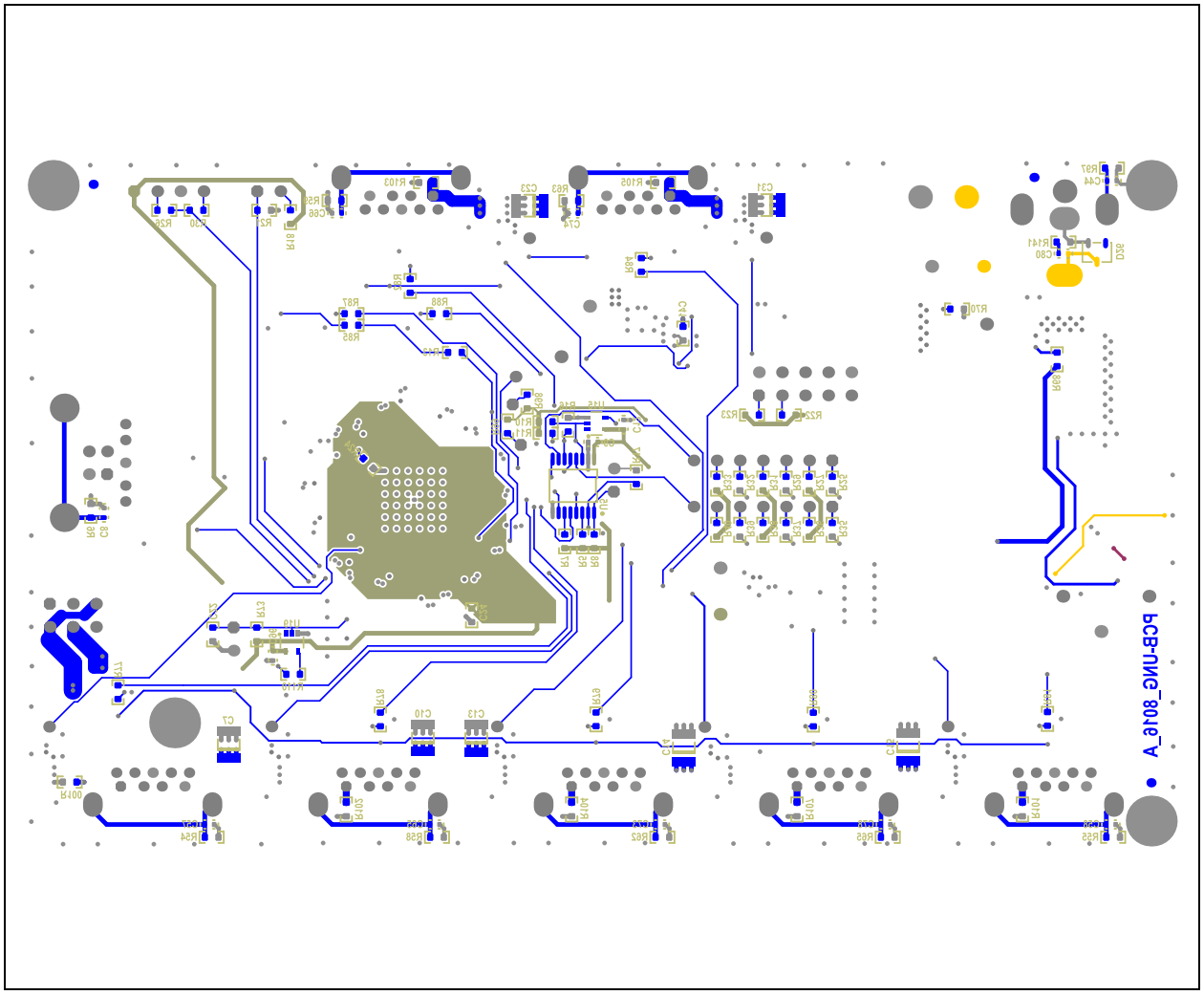

© 2016 Microchip Technology Inc.

Worldwide Sales and Service

AMERICAS

Corporate Office
2355 West Chandler Blvd.
Chandler, AZ 85224-6199
Tel: 480-792-7200
Fax: 480-792-7277
Technical Support:
http://www.microchip.com/support
Web Address:
www.microchip.com

Atlanta
Duluth, GA
Tel: 678-957-9614
Fax: 678-957-1455

Austin, TX
Tel: 512-257-3370

Boston
Westborough, MA
Tel: 774-760-0087
Fax: 774-760-0088

Chicago
Itasca, IL
Tel: 630-285-0071
Fax: 630-285-0075

Cleveland
Independence, OH
Tel: 216-447-0464
Fax: 216-447-0643

Dallas
Addison, TX
Tel: 972-818-7423
Fax: 972-818-2924

Detroit
Novi, MI
Tel: 248-848-4000

Houston, TX
Tel: 281-894-5983

Indianapolis
Noblesville, IN
Tel: 317-773-8323
Fax: 317-773-5453

Los Angeles
Mission Viejo, CA
Tel: 949-462-9523
Fax: 949-462-9608

New York, NY
Tel: 631-435-6000

San Jose, CA
Tel: 408-735-9110

Canada - Toronto
Tel: 905-695-1980
Fax: 905-695-2078

ASIA/PACIFIC

Asia Pacific Office
Suites 3707-14, 37th Floor
Tower 6, The Gateway
Harbour City, Kowloon

Hong Kong
Tel: 852-2943-5100
Fax: 852-2401-3431

Australia - Sydney
Tel: 61-2-9868-6733
Fax: 61-2-9868-6755

China - Beijing
Tel: 86-10-8569-7000
Fax: 86-10-8528-2104

China - Chengdu
Tel: 86-28-8665-5511
Fax: 86-28-8665-7889

China - Chongqing
Tel: 86-23-8980-9588
Fax: 86-23-8980-9500

China - Dongguan
Tel: 86-769-8702-9880

China - Guangzhou
Tel: 86-20-8755-8029

China - Hangzhou
Tel: 86-571-8792-8115
Fax: 86-571-8792-8116

China - Hong Kong SAR
Tel: 852-2943-5100
Fax: 852-2401-3431

China - Nanjing
Tel: 86-25-8473-2460
Fax: 86-25-8473-2470

China - Qingdao
Tel: 86-532-8502-7355
Fax: 86-532-8502-7205

China - Shanghai
Tel: 86-21-5407-5533
Fax: 86-21-5407-5066

China - Shenyang
Tel: 86-24-2334-2829
Fax: 86-24-2334-2393

China - Shenzhen
Tel: 86-755-8864-2200
Fax: 86-755-8203-1760

China - Wuhan
Tel: 86-27-5980-5300
Fax: 86-27-5980-5118

China - Xian
Tel: 86-29-8833-7252
Fax: 86-29-8833-7256

ASIA/PACIFIC

China - Xiamen
Tel: 86-592-2388138
Fax: 86-592-2388130

China - Zhuhai
Tel: 86-756-3210040
Fax: 86-756-3210049

India - Bangalore
Tel: 91-80-3090-4444
Fax: 91-80-3090-4123

India - New Delhi
Tel: 91-11-4160-8631
Fax: 91-11-4160-8632

India - Pune
Tel: 91-20-3019-1500

Japan - Osaka
Tel: 81-6-6152-7160
Fax: 81-6-6152-9310

Japan - Tokyo
Tel: 81-3-6880- 3770
Fax: 81-3-6880-3771

Korea - Daegu
Tel: 82-53-744-4301
Fax: 82-53-744-4302

Korea - Seoul
Tel: 82-2-554-7200
Fax: 82-2-558-5932 or
82-2-558-5934

Malaysia - Kuala Lumpur
Tel: 60-3-6201-9857
Fax: 60-3-6201-9859

Malaysia - Penang
Tel: 60-4-227-8870
Fax: 60-4-227-4068

Philippines - Manila
Tel: 63-2-634-9065
Fax: 63-2-634-9069

Singapore
Tel: 65-6334-8870
Fax: 65-6334-8850

Taiwan - Hsin Chu
Tel: 886-3-5778-366
Fax: 886-3-5770-955

Taiwan - Kaohsiung
Tel: 886-7-213-7828

Taiwan - Taipei
Tel: 886-2-2508-8600
Fax: 886-2-2508-0102

Thailand - Bangkok
Tel: 66-2-694-1351
Fax: 66-2-694-1350

EUROPE

Austria - Wels
Tel: 43-7242-2244-39
Fax: 43-7242-2244-393

Denmark - Copenhagen
Tel: 45-4450-2828
Fax: 45-4485-2829

France - Paris
Tel: 33-1-69-53-63-20
Fax: 33-1-69-30-90-79

Germany - Dusseldorf
Tel: 49-2129-3766400

Germany - Karlsruhe
Tel: 49-721-625370

Germany - Munich
Tel: 49-89-627-144-0
Fax: 49-89-627-144-44

Italy - Milan
Tel: 39-0331-742611
Fax: 39-0331-466781

Italy - Venice
Tel: 39-049-7625286

Netherlands - Drunen
Tel: 31-416-690399
Fax: 31-416-690340

Poland - Warsaw
Tel: 48-22-3325737

Spain - Madrid
Tel: 34-91-708-08-90
Fax: 34-91-708-08-91

Sweden - Stockholm
Tel: 46-8-5090-4654

UK - Wokingham
Tel: 44-118-921-5800
Fax: 44-118-921-5820

06/23/16

© 2016 Microchip Technology Inc.